See page i for details.

# OPERATOR'S MANUAL

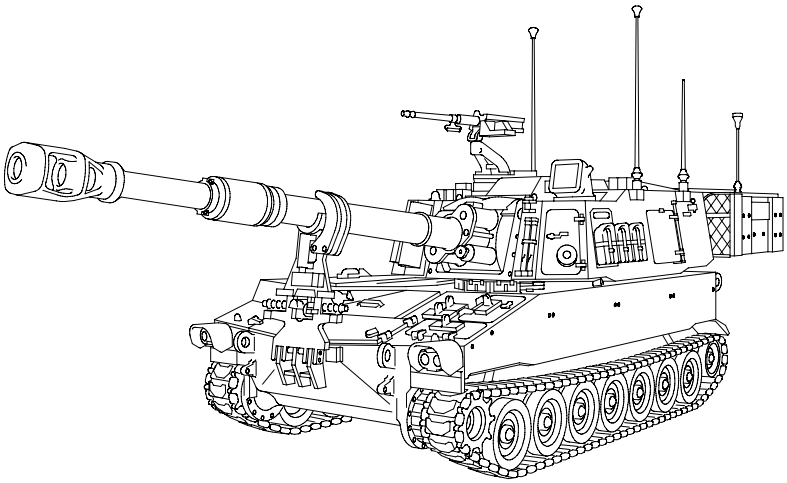

# HOWITZER, MEDIUM, SELF-PROPELLED: 155MM, M109A6 (NSN 2350-01-305-0028) (EIC: 3FC)


| | |
|---|---|
| OPERATOR'S CONTROLS AND INDICATORS | 2-1 |
| PREVENTIVE MAINTENANCE CHECKS AND SERVICES (PMCS) | 2-13 |
| OPTICAL FIRE CONTROL | 2-133 |
| AUTOMATIC FIRE CONTROL SYSTEM (AFCS) | 2-138 |
| PALADIN DIGITAL FIRE CONTROL SYSTEM (PDFCS) | 2-258.1 |
| PREPARATIONS FOR FIRING THE HOWITZER | 2-259 |
| TROUBLESHOOTING | 3-43 |
| FIRE CONTROL ALIGNMENT TESTS AND MEASUREMENTS | 3-137 |
| AMMUNITION | 5-1 |


Distribution Statement A: Approved for public release; distribution is unlimited.

Copyright © 1997 BAE Systems Land & Armaments, L.P. Unlimited Government Rights.

HEADQUARTERS, DEPARTMENT OF THE ARMY

FEBRUARY 1999

**WARNING**

## RADIOACTIVE MATERIAL(S)

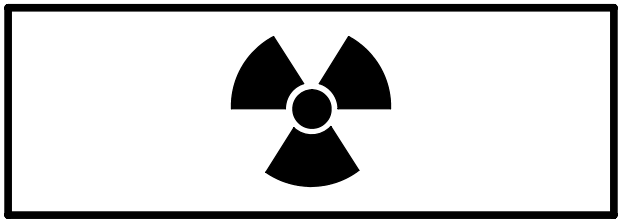

## TRITIUM (HYDROGEN-3) GAS

Tritium gas is an ionizing radiation hazard. The beta radiation emitted by tritium is an internal hazard and considered carcinogenic. Tritium can enter the body through inhalation, ingestion or skin absorption.

- If a tritium lamp is broken, tritium gas will oxidize resulting in contamination of the device, personnel and surrounding work areas. Ventilate area immediately with outside air and contact the Local Radiation Safety Officer (LRSO) to determine the extent of contamination to personnel and work areas.
- Prior to maintenance (or if equipment is damaged), check for illumination of the device in a dark room environment. If illumination is not present, notify LRSO. Do not attempt to repair the device.
- Refer to the Safety, Care and Handling section for further guidance.

SAFETY, CARE AND HANDLING PROCEDURES FOR TRITIUM FIRE CONTROL DEVICES WITH RADIOACTIVE TRITIUM GAS ($^3H_2$)

1. Purpose and Scope: This procedure implements mandatory license requirements for use and maintenance of tritium radioluminous fire control devices used on howitzers, mortars, tanks, and rifles. Control of Nuclear Regulatory Commission (NRC) licensed radioactive material is mandated by federal law. This procedure is applicable to all personnel working with tritium devices, including general support, direct support and unit maintenance and operator levels.

2. Emergency procedures: In the event the radioluminous source is broken, cracked, or there is no illumination, immediately wrap device in plastic bag (item 5, Appx D) and notify the local RSO. Contact the base safety office for the name and telephone number of your local RSO:

LOCAL RSO:_____ TELEPHONE:_____

a. If a tritium source breaks, inform other personnel to vacate the area or move upwind. If skin contact is made with any area contaminated with tritium, wash immediately with nonabrasive soap and water. Report the incident to the local RSO. Actions below will be taken under supervision or direction of the local RSO. The local RSO will contact the licensee as indicated in paragraph 6.c.

b. Personnel handling the tritium device should wear rubber or latex gloves (item 17, Appx D). Device must be immediately double wrapped in clear plastic bags, sealed with tape (item 39, Appx D), and marked as “Broken Tritium Device – Do Not Open” per RSO direction. Dispose of used gloves as radioactive waste, per instructions from local RSO and wash hands immediately after bagging device.

c. Personnel who may have been exposed to the broken tritium device should report to health clinic for tritium bioassay. Optimum bioassay sample is at least 4 hours after exposure.

d. Broken tritium sources indoors may result in tritium contamination in the area, such as work bench or table. The area must be cordoned off, restricted until wipe tests indicate no contamination.

e. Immediately report any suspected lost or damaged items to your Radiation Safety Officer (RSO). If your RSO cannot be reached, contact the TACOM-LCMC-Rock Island Safety Office.

3. Safety precautions:

a. Check for illumination prior to use or service in low light or darkroom. If not illuminated, do not repair. Wrap the entire device in plastic bag (item 5, Appx D) and notify the local RSO.

b. Local RSO will perform a leak test to determine if the device is contaminated with tritium.

c. No eating, drinking, or smoking will be allowed in tritium device work areas.

4. Pre-Maintenance Check:

**WARNING**

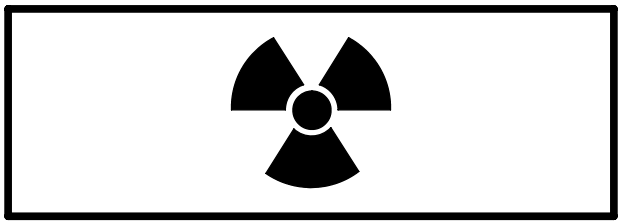

## RADIATION HAZARD

Fire control instruments containing Tritium are used as a part of a backup system for manual firing. Loss of illumination may indicate that leakage has occurred. Do not attempt to repair a non-illuminated device.

a. Prior to taking any maintenance action on fire control devices (e.g., purging or charging M1A1 Collimator), check for broken/cracked reticle or loss of illumination as follows:

(1) Place device in the dark for at least two hours to prevent exterior light from activating the phosphor.

(2) Check for cracks/illumination in a low light environment after allowing sufficient time to accustom eyes to the dark (15 minutes).

b. If illumination is not observed, or illuminated but cracks are observed, take following actions:

(1) Call your RSO immediately.

(2) Personnel handling the tritium device should wear rubber or latex gloves (item 17, Appx D).

(3) Seal entire device in two clear plastic bags (item 5, Appx D).

(4) Mark the outer bag as “Broken tritium device – do not open.”

(5) Place the device in an outside storage facility designated by the RSO.

(6) Dispose of used gloves as radioactive waste as per instructions from local Radiation Safety Officer (RSO) before touching any other objects or surfaces. Wash hands well with nonabrasive soap and water.

c. If illumination is observed, maintenance actions may proceed.

5. Depot Level Maintenance. Activities performing depot level repair (removing tritium lamps from modules) must obtain a Special Repair Authorization (SRA) from TACOM – Rock Island Safety Office.

6. Further information.

a. Requirements for safe handling and maintenance are located in TM 9-254, General Maintenance Procedures for Fire Control Materiel.

b. The following rules and regulations are available from TACOM-LCMC RSO, ATTN: AMSMC-CS-CZR, Rock Island, IL 61299-7630. Copies may be requested or further information obtained by contacting the TACOM-LCMC RSO/licensee.

(1) Title 10 CFR Part 19 – Notices, Instructions, and Reports to Workers.

(2) Title 10 CFR Part 20 – Standards for Protection Against Radiation.

(3) Title 10 CFR Part 21 – Reporting of Defects and Noncompliance.

(4) NRC License, License Conditions, and License Application.

c. If assistance is needed, contact your local or major command (MACOM) safety office(s) for information on safe handling, shipping, storage, maintenance, or disposal of radioactive devices.

d. The TACOM-LCMC RSO/licensee may be contacted by calling: DSN 793-2965/6499, Commercial (309) 782-2965/6499. After duty hours, call the Rock Island Operation Center at DSN 793-7380.

**WARNING**

**CARBON MONOXIDE POISONING CAN BE DEADLY**

Carbon monoxide is a colorless, odorless, deadly poisonous gas which, when breathed, deprives the body of oxygen and causes suffocation. Exposure to air contaminated with carbon monoxide produces symptoms of nausea, headache, dizziness, apparent drowsiness, loss of muscular control, and coma. Permanent brain damage or death can result from severe exposure.

Carbon monoxide occurs in the exhaust fumes of fuel-burning heaters and internal-combustion engines and from firing the main armament. It becomes dangerously concentrated under conditions of inadequate ventilation. The following precautions must be observed to ensure the safety of personnel whenever the personnel heater, main or auxiliary engine of any vehicle is operated for maintenance purposes or tactical use, or when firing the main armament.

1. **DO NOT** operate heater or engine of vehicle in an enclosed area unless it is **ADEQUATELY VENTILATED**.

2. **DO NOT** idle engine for long periods without maintaining adequate ventilation in personnel compartments.

3. **DO NOT** drive any vehicle with inspection plates, cover plates, or engine compartment doors removed unless necessary for maintenance purposes.

4. **BE ALERT** at all times during vehicle operation for exhaust odors and exposure symptoms. If either are present, immediately ventilate personnel compartments. If symptoms persist, remove affected personnel from vehicle and treat as follows: expose to fresh air; keep warm; do not permit physical exercise; if necessary, administer artificial respiration.

5. Assure that **LEAD FILTER** switch is set at **INTAKE** during all firings and **VENT DUCT CONTROL HANDLE** is in the **UP** position (para 2-22.2a).

**THE BEST DEFENSE AGAINST CARBON MONOXIDE POISONING IS ADEQUATE VENTILATION**

**WARNING**

- **DO NOT** chamber ammunition until immediately before firing. Ammunition left too long in a hot weapon may result in hazardous conditions. Fire or remove ammunition within 5 minutes of chambering.
- For each new issue, overhauled, inspected or repaired cannon or mount received, fire first round using 50-ft lanyard.
- The firing of a field artillery round without a fuze or with an unauthorized fuze is strictly prohibited. Only authorized fuzes will be used with the authorized projectiles and propelling charges, or an in-bore premature explosion will result.
- Do not fire charges 1 and 2, Green Bag, M3A1. The fire control solution to fire these charges in the M109A6 Howitzer is not available.
- Keep all propelling charges containerized until the breech is opened from the previous round. Unused powder increments will be placed back into powder container on the howitzer until time permits burning. Severe burns to personnel may result from accidental ignition of excess powder increments.
- Do not stand directly behind the breech opening while loading.
- Refer to TM 9-1300-206, “Ammunition and Explosives Standards,” for correct procedures for storing and handling ammunition.
- High intensity noise hearing protection required. Decibel levels of engine during operation exceed safe levels for human hearing. Failure to wear hearing protection could result in hearing impairment.
- Personnel hearing can be **PERMANENTLY DAMAGED** if exposed to constant high noise levels of 85 dB (A) or greater. Wear approved hearing protection devices when working in high noise level areas. Personnel exposed to high noise levels shall participate in a hearing conversation program in accordance with PAM 40-501. Hearing loss occurs gradually but becomes permanent over time.
- Use care when manually unlocking travel lock. If jaw is not fully unclamped, crowbar will snap back. Injury to personnel could result.
- Do not open doors in an NBC environment. LEAD filter shall be used during Fire Missions and during suspected NBC environment, to prevent exposure to carbon monoxide gas. If NBC exposure is suspected, all air filter media will be handled by personnel wearing full NBC protective equipment. Consult your unit NBC officer or NBC NCO for appropriate handling or disposition instructions.
- Remain at least 2 feet from radiating antennas of vehicle mounted radios. Antennas can radiate harmful levels of radio frequency.

**WARNING**

- To avoid danger of electrical shock and damage to equipment, ensure that both radio antennas are tied down before driving under overhead power lines.
- Be familiar with all driver's controls. The two-stage accelerator is provided to compensate for variations in driver's seat height and in driver's physical characteristics. **DO NOT** mistake raised portion of accelerator for a brake. Death or injury could result from failure to heed this warning.
- When backing the vehicle for emplacement or any other reason, two personnel must guide the driver.
- Battery BA-l576/U used in night viewer may explode if overheated. Do not operate night viewer on the battery when the power cable is attached. This may cause the battery to overheat. Do not store night viewer with battery installed.
- Phosphorus material on inside of night viewer is toxic if tube is broken. Be careful not to inhale or allow contact with open skin wounds or with mouth.
- Do not remove radiator cap while engine is hot. Hot coolant can cause severe injury.
- Dry-cleaning solvent MIL-PRF-680 is toxic and flammable. To avoid injury, wear protective goggles and gloves and use in a well-ventilated area. Avoid contact with skin, eyes, and clothes. Do not breathe vapors. Do not use near open fire or excessive heat. Do not smoke when using solvent. Failure to do so could cause **SERIOUS INJURY**. If you become dizzy while using dry-cleaning solvent, get fresh air immediately, and if necessary, get medical attention. If contact with skin or clothes is made, flush thoroughly with water. If the solvent contacts your eyes, wash them with water immediately and obtain medical aid (FM 4-25.11).
- During training and in combat (situation permitting) hatches and doors should be opened and personnel should exit the vehicle when $CO_2$ discharges. Headache, dizziness and performance degradation may occur in the presence of $CO_2$.
- $CO_2$ is a toxicant and an asphyxiant. Do not inhale discharged $CO_2$. Ventilate area if $CO_2$ is discharged.

**WARNING**

- Corrosion inhibitor contains alkali. Do not get in eyes; wear goggles/safety glasses when using. Avoid contact with skin. In case of contact, immediately wash area with soap and water. If eyes are contacted, flush eyes with large amounts of water for at least 15 minutes and get immediate medical attention.

- Refer to FM 4-25.11, “First Aid for Soldiers,” for correct procedures to be taken if a crewmember is injured. For hazardous materials, refer to the label or material safety data sheet (MSDS).

- Diesel fuel is flammable. **DO NOT** smoke within 50 feet of the vehicle while refueling.

- Do not place flammables or explosives on or near personnel heater to prevent injury to personnel and damage to equipment. Do not block or restrict the heater vent.

- Shut off engine prior to opening the engine doors, unless specified otherwise. Failure to do this may result in personnel injury due to possibility of personnel being struck by moving components.

- A protective fan screen must be installed prior to doing maintenance in the engine compartment when engine is running or when running engine in ground hop mode. High air flow can suck hands into fan impeller.

**WARNING**

**LEAD PARTICULATE AND FUMES HAZARD**

The adverse effects associated with exposure of lead range from acute to relatively mild. The symptoms of severe lead intoxication include loss of appetite, metallic taste, constipation, nausea, pallor, excessive tiredness, weakness, insomnia, headache, nervous irritability, muscle and joint pains, fine tremors, numbness, dizziness, hyperactivity, and colic.

Inorganic lead absorption can occur from inhaling finely divided particles of metallic or soluble lead compounds. Lead is released as a result of firing artillery weapons because propelling charges normally contain lead foil as a decoppering agent that removes rotating band residue from the weapon bore. The lead is vaporized as the charge burns and is either swept through the tube and out the muzzle or settles in the crew compartment.

The following precautions must be observed to ensure safety of personnel during routine and combat conditions.

**BE ALERT** during all firing missions for exposure symptoms. If symptoms of lead intoxication are suspected, **IMMEDIATELY** ventilate vehicle. If symptoms persist, remove affected personnel from vehicle and treat as follows: Expose to fresh air, keep warm, do not permit physical exercise. (Consult FM 4-25.11, “First Aid for Soldiers”, for additional instruction.) A physician should be consulted within 24 hours.

**WARNING**

- Individual exposure shall be limited to a maximum firing dosage of 13 M119 charges or six M203 charges per 24 hour period. If firing dosage will exceed these limits, MCS operation with the M25A1 face mask is required.

**WARNING**

- The howitzer bustle overhang and low rear door/slip ring present a head injury hazard. This hazard can be reduced by wearing a CVC or kevlar helmet when working around the vehicle.

- The driver must not protrude any part of his body out of the open driver's hatch while the cab is being traversed. The COS shall notify the driver and receive positive verbal acknowledgement from the driver prior to traversing the cab. Failure to do this may result in possible injury/death to the driver.

- When traversing cab at high elevations beyond 45 degrees traverse limit, make sure that personnel in the area of the projectile racks are not struck by the rammer. Failure to do this may result in personnel injury–impact/crushing or equipment damage due to rammer striking personnel or projectile rack.

- Limit crew exposure to vehicle vibration to 5.4 hours per 24 hour period. Prolonged exposure to vehicle vibration can result in permanent physical damage to the crew.

- Crewmembers must wear properly sized and maintained DH–132 helmets (single hearing protection) when engine is on and training more than 46 km in 24 hour period. Ear plugs and DH–132 helmet must be worn if more than 46 km in 24 hour period. All personnel within 6 meters of an operating M109A6 must wear single hearing protection. Failure to do this may result in personnel injury–hearing damage due to exposure to high noise levels.

- The COS and other personnel within 66 feet to either side of the machine gun and 27 feet behind the machine gun must wear approved and properly fitted single hearing protective devices (e.g. DH–132 helmet) when the machine gun is being fired. Failure to do this may result in personnel injury–auditory damage.

**WARNING**

- When servicing this vehicle, performing maintenance, or disposing of materials such as engine coolant, transmission fluid, lubricants, battery acids or batteries, and CARC paint, consult your unit/local regulatory guidance. If further information is needed please contact the U.S. Army Environmental Hotline at 1–800–872–3845.

**WARNING**

- When hooking or unhooking towbar from a disabled vehicle, set parking brake or chock tracks of disabled vehicle before hooking or unhooking towbar.
- If towed vehicle is not chocked, or parking brake not set, disabled vehicle may move, causing injury or death to personnel and/or damage to equipment.

**WARNING**

Personnel in howitzer and ammunition resupply vehicle must wear properly fitting single (e.g. DH-132 helmet, ear plugs, etc.) or double (DH-132 helmet and ear plugs etc.) hearing protection. Personnel located within 630 meters of the howitzer must wear properly fitted single hearing protection during firing. Daily firing dosage per individual must be limited to 1000 points IAW the point value system listed in the following tables. Failure to do this may result in personnel injury-auditory damage due to lack of or inadequate hearing protection.

**Table I. Points per Round for Various Propelling Charges and Hatch Configurations if the Driver is in the Driver's Compartment**

| Hearing Protection | Hatch Configuration | Propelling Charge | | | |
|---|---|---|---|---|---|
| | | M203 | M119 | M4A2 | M3A1 |
| Single | All Closed | 6 | 57 | 8 | 4 |
| | Rear & Side Open | P | P | 8 | 4 |
| | Only Rear Open | P | 65 | 8 | 4 |
| Double | All Closed | 1 | 3 | 1 | 1 |
| | Rear & Side Open | P | P | 1 | 1 |
| | Only Rear Open | P | 4 | 1 | 1 |

P = Prohibited

Note: To be used in calculating recommended maximum number of rounds fired for crewmembers inside the M109A6.

**Table II. Points per Round for Various Propelling Charges and Hatch Configurations if the Driver is not in the Driver's Compartment**

| Hearing Protection | Hatch Configuration | Propelling Charge | | | |
|---|---|---|---|---|---|
| | | M203 | M119 | M4A2 | M3A1 |
| Single | All Closed | 6 | 1 | 6 | 1 |
| | Rear & Side Open | P | P | 6 | 1 |
| | Only Rear Open | P | 14 | 6 | 1 |
| Double | All Closed | 1 | 1 | 1 | 1 |
| | Rear & Side Open | P | P | 1 | 1 |
| | Only Rear Open | P | 1 | 1 | 1 |

P = Prohibited
Note: To be used in calculating recommended maximum number of rounds fired for crewmembers inside the M109A6.

**Table III. Points per Round for Various Propelling Charges with the Driver Removed from the Ammunition Resupply Vehicle**

| Hearing Protection | Hatch Configuration | Propelling Charge | | | |
|---|---|---|---|---|---|
| | | M203 | M119 | M4A2 | M3A1 |
| Single | Closed | 1 | 1 | 1 | 1 |
| | Open | 164 | 59 | 42 | 1 |
| | M548 | 82 | * | * | * |
| Double | Closed | 1 | 1 | 1 | 1 |
| | Open | 9 | 3 | 3 | 1 |
| | M548 | 5 | * | * | * |

*= No data available to determine points per round.

NOTES:

1. To be used in calculating recommended maximum number of rounds fired for crewmembers in the ammunition area of the ammunition resupply vehicle.
2 Points shown are for all ammunition resupply vehicle personnel when resupply vehicle is less than 45 feet (14 meters) from a firing howitzer.

**Table IV. Points per Round for MACS Propelling Charges and Hatch Configurations if the Driver is in the Driver's Compartment.**

| Hearing Protection | Hatch | M232/M232A1 Chg 5 H5 | M232/M232A1 Chg 4 H4 | M232/M232A1 Chg 3 H3 | M231 Chg 2 L2 | M231 Chg 1 L1 |
|---|---|---|---|---|---|---|
| Single | All Closed | 8 | 8 | 4 | 1 | 1 |
| | Rear & Side Open | P | P | P | 1 | 1 |
| | Only Rear Open | P | P | P | 1 | 1 |
| Double | All Closed | 1 | 1 | 1 | 1 | 1 |
| | Rear & Side Open | P | P | 14 | 1 | 1 |
| | Only Rear Open | P | 30 | 14 | 1 | 1 |

**Table V. Points per Round for MACS Propelling Charges and Hatch Configurations if the Driver is NOT in the Driver's Compartment.**

| Hearing Protection | Hatch | M232/M232A1 Chg 5 H5 | M232/M232A1 Chg 4 H4 | M232/M232A1 Chg 3 H3 | M231 Chg 2 L2 | M231 Chg 1 L1 |
|---|---|---|---|---|---|---|
| Single | All Closed | 8 | 8 | 1 | 1 | 1 |
| | Rear & Side Open | P | P | 71 | 1 | 1 |
| | Only Rear Open | P | 83 | 71 | 1 | 1 |
| Double | All Closed | 1 | 1 | 1 | 1 | 1 |
| | Rear & Side Open | P | P | 4 | 1 | 1 |
| | Only Rear Open | P | 6 | 4 | 1 | 1 |

**Table VI. Points per Round for MACS Propelling Charges with the Driver Removed from the M992A2 Ammunition Resupply Vehicle.**

| Hearing Protection | Hatch | M232/M232A1 Chg 5 H5 | M232/M232A1 Chg 4 H4 | M232/M232A1 Chg 3 H3 | M231 Chg 2 L2 | M231 Chg 1 L1 |
|---|---|---|---|---|---|---|
| Single | Closed | P | P | P | 6 | 1 |
| | Open | P | P | P | 1 | 1 |
| Double | Closed | P | P | 26 | 1 | 1 |
| | Open | 40 | 38 | 24 | 1 | 1 |

**WARNING**

- All personnel located outside the vehicle must be clear of hull and driver's hatch must be closed while cab is being traversed.
- Radiation Hazard — Tritium Gas (H-3)
  The M140 alignment device is radioactively illuminated. Check for presence of illumination in a low light environment. If illumination is not present, notify local radiological protection officer. Do not attempt to repair.

**WARNING**

**ALKALINE BATTERIES**

- Caustic potassium hydroxide gas may be released from leaking or ruptured batteries. Avoid eye or skin contact and inhalation of vapors. Increase ventilation. Wear safety glasses and rubber gloves when handling leaking batteries. Dispose in accordance with local regulation. Refer to TB 43-0134, Batteries, Disposition and Disposal for additional information.

- The crew compartment must be adequately ventilated during all firing using the LEAD PARTICULATE FILTER or ventilation system in accordance with para 2-22.2.

- Ensure that correct propellant temperature and shell weights are entered in PDFCS. Failure to comply will result in incorrect ballistic computations. This could cause injury or death to friendly troops.

- Radiation Hazard — Tritium Gas (H-3)
  The M1A1 collimator is radioactively illuminated and should be checked before using for illumination in low-light environment. If no illumination occurs, notify local radiological protection officer. Do not attempt to repair.

- Site to Crest information must be entered in AFCS/PDFCS or transmitted to POC/BCS/FDC. Failure to enter or send this information will result in an incorrect ballistic computation. This could cause injury or death to friendly troops.

- Direct fire on targets located closer than 800 meters from howitzer will be fired on during combat situations only. Lethal fragments can travel up to 600 meters from point of burst.

**WARNING**

Electrical power shall be removed (off) before disconnecting or connecting electrical connectors or removing or installing units or components. Inadvertent contact with voltages present may be fatal. Connector pins may be damaged by arcing.

**WARNING**

- Do not load more than two increments of M231.
- Do not use Charge 1 or 2 green bags, M3A1.
- Do not use Charge 1 or 2, M232/M232A1.
- When authorized rates of fire for howitzer are exceeded, propellingcharge cook-offs may occur within 1 minute after chambering. If firing in hot tube status, propelling charge cook-off may occur within 1 minute after chambering. AFCS/PDFCS/TTS will indicate hot, warm, or cold tube. If TTS is operational, use temperature readout to determine tube condition and safe time in tube.
- Keep weapon trained on target. Evacuate all personnel except COS and No. 1 cannoneer.
- Stay clear of recoiling parts and don't put hand behind primer vent.
- The primer can be expelled rearward should there be a sticker.
- Never fire a projectile or charge that has been allowed to cool in a heated tube. Separate them and mark both unserviceable.
- When opening the breech to remove the powder charge and if smoke/sparks are coming from the chamber area, do not attempt to remove the charge or close the breech. Immediately evacuate the vehicle through the gunner's escape hatch, commander's cupola, or cab side doors, but not the hull rear door. Notify EOD.

**WARNING**

When inspecting or working with the AFCS or PDFCS DU, if screens appear to be cracked or broken or you suspect that mercury is escaping or has escaped, avoid breathing the vapors, avoid contact with eyes, skin or clothes and exit vehicle as fast as possible. Upon exiting the vehicle, immediately contact proper authorities so that spillage can be removed. Failure to comply could result in personnel injury from mercury exposure.

**WARNING**

Before troubleshooting AFCS gun positioning faults, make sure immediate area around and in the howitzer is clear of personnel and that no other equipment is within the 360 degree radius of the cab. Before moving gun servo switch to the ON position, announce loudly to everyone in immediate area, “AFCS POWER ON.” Serious injury or death, and/or equipment damage could result.

**WARNING**

Before troubleshooting PDFCS gun positioning faults, make sure immediate area around and in the howitzer is clear of personnel and that no other equipment is within the 360 degree radius of the cab. Before moving gun servo switch to the ON position, announce loudly to everyone in immediate area, “PDFCS POWER ON.” Serious injury or death, and/or equipment damage could result.

**WARNING**

Ensure that correct propellant temperature and shell weights are entered in AFCS. Failure to comply will result in incorrect ballistic computations. This could result in injury or death to friendly troops.

**WARNING**

Entry of improper data into boresight angle entry menu can cause gun to be laid incorrectly. This could result in injury or death to personnel down range.

**WARNING**

- Modification and use of ADVANCED SETTINGS should only be performed at the direction of FDC. Improper use of ADVANCED SETTINGS will seriously degrade network.

- ADVANCED SETTING changes are not authorized by the user unless directed by FDC. Failure to comply could result in system degradation.

**WARNING**

**LITHIUM-SULFUR DIOXIDE (Li-SO2) BATTERY, BA-5800**

Li-SO2 batteries contain pressurized SO2 gas. The gas has a sharp pungent odor (characterized as "rotten egg" smell), and is highly toxic. The battery MUST NOT be abused in any way which may cause the battery to rupture. Always use these lithium battery precautions:

- If you hear a hissing sound (battery venting), or smell irritating gas, IMMEDIATELY turn off the equipment, and LEAVE the area. Ventilate area until smell of leaking gas has dissipated.

- IMMEDIATELY turn off the equipment if battery or battery compartment shows signs of overheating or becomes hot to the touch. Allow the battery to cool (at least 60 minutes) before removing it.

- Never charge, short circuit, mutilate, or dispose of lithium batteries in a fire, or in any way expose lithium batteries to excessive heat.

- When operating the EPIAFS on external power with BA-5800 lithium battery installed, the battery may explode. Ensure battery is removed before connecting power cable to prevent serious injury.

- Dispose of hazardous material and waste through the local servicing DRMO or via local contract. coordinate with local Installation/Environmental/Hazmat Officer to ensure conformance with federal, state and local environmental regulations.

- Always store, operate, and dispose of lithium batteries in accordance with TB 43-0134, Technical Bulletin Battery Disposition and Disposal.

**WARNING**

- The firing of High Explosive Projectiles could be hazardous. A detonation of the projectile in the safe separation distance is improbable, but possible. To reduce the effects of this hazard, all personnel outside the howitzer should wear ballistic body armour during fire missions. This warning applies to both direct and indirect fire modes for all fragmentation high explosive type projectiles fired with the fuzes stated below.
- Fuze, Point detonating, M739 series (N340)
- Fuze, Point detonating, MK399 MOD1 (N659)
- Fuze, Mechanical Time and Superquick, M582 series (N286)
- Fuze, Proximity, M732 (N464)
- Fuze, Proximity, M732A2 (N291)
- Fuze, Electronic Time and Superquick, M767 series (N290)
- Fuze, Multi Option Fuze Artillery, M782 (NA09)

**WARNING**

In the event of an emergency shutdown, DO NOT TOUCH the heater or heat exchanger until it has had sufficient time to cool. Serious injury or burns could result.

**WARNING**

Before troubleshooting AFCS gun positioning faults, make sure immediate area around and in the howitzer is clear of personnel and that no other equipment is within the 360 degree radius of the cab. Before moving gun servo switch to the ON position, announce loudly to everyone in immediate area, “AFCS POWER ON”. Serious injury or death, and/or equipment damage could result.

**WARNING**

- Modification and use of Advanced Settings should only be performed at the direction of FDC. Improper use of Advanced Settings will seriously degrade network.
- Advanced Setting changes are not authorized by the user unless directed by FDC. Failure to comply could result in system degradation.

TM 9-2350-314-10
C6
HEADQUARTERS
DEPARTMENT OF THE ARMY
WASHINGTON, D.C., 30 September 2008

CHANGE
NO. 6

# OPERATOR'S MANUAL
# FOR
# HOWITZER, MEDIUM,
# SELF-PROPELLED: 155MM M109A6
# (NSN 2350-01-305-0028) (EIC: 3FC)

TM 9-2350-314-10, 8 February 1999, is changed as follows:

1. The purpose of this change is to update TM 9-2350-314-10.

2. New or changed material is indicated by a vertical bar in the outside margin of text changes and by a hand symbol beside illustration changes.

3. Remove the old page and insert the new page as indicated below:

| Remove Pages | Insert Pages |
|---|---|
| A through D | A through D |
| i through iv | i through iv |
| None | F.2-1 through F.2-30 |
| None | G.4-1 through G.4-4 |
| J.1-1 and J.1-2 | J.1-1 and J.1-2 |
| None | N-1 through N-261/(N-262 blank) |
| None | O-1 through O-263/(O-264 blank) |
| Index-1 and Index-2 | Index-1 and Index-2 |

4. File this change in front of the publication.

Distribution Statement A: Approved for public release; distribution is unlimited.

By Order of the Secretary of the Army:

GEORGE W. CASEY, JR.
*General, United States Army*
*Chief of Staff*

Official:

JOYCE E. MORROW
*Administrative Assistant to the*
*Secretary of the Army*
0819801

Distribution:

To be distributed in accordance with the initial distribution number (IDN) 371931 requirements for TM 9-2350-314-10.

TM 9-2350-314-10
C5
HEADQUARTERS
DEPARTMENT OF THE ARMY
WASHINGTON, D.C., 30 JUNE 2008

CHANGE
NO. 5

# OPERATOR'S MANUAL
# FOR
# HOWITZER, MEDIUM,
# SELF-PROPELLED: 155MM M109A6
# (NSN 2350-01-305-0028) (EIC: 3FC)

TM 9-2350-314-10, February 1999, is changed as follows:

1. The purpose of this change is to update TM 9-2350-314-10.

2. New or changed material is indicated by a vertical bar in the outside margin of text changes and by a hand symbol beside illustration changes.

3. Remove the old page and insert the new page as indicated below:

| Remove Pages | Insert Pages |
|---|---|
| a through h | a through h |
| k through n | k through n |
| None | o through r |
| A through D | A through E/(F blank) |
| i through iv | i through iv |
| 1-1 and 1-2 | 1-1 and 1-2 |
| 1-5 through 1-14 | 1-5 through 1-14 |
| 1-18.1 and 1-18.2 | 1-18.1 and 1-18.2 |
| 1-19 and 1-20 | 1-19 and 1-20 |
| 1-25 and 1-26 | 1-25 and 1-26 |
| 1-37 and 1-38 | 1-37 and 1-38 |
| 1-38.1 and 1-38.2 | 1-38.1 and 1-38.2 |
| 1-39 and 1-40 | 1-39 and 1-40 |
| 2-13 and 2-14 | 2-13 and 2-14 |
| None | 2-14.1/(2-14.2 blank) |
| 2-15 and 2-16 | 2-15 and 2-16 |
| 2-23 and 2-24 | 2-23 and 2-24 |
| 2-27 and 2-28 | 2-27 and 2-28 |
| 2-28.1 and 2-28.2 | 2-28.1 and 2-28.2 |
| None | 2-28.3 and 2-28.4 |
| 2-29 through 2-32 | 2-29 through 2-32 |
| 2-37 through 2-40 | 2-37 through 2-40 |
| 2-53 and 2-54 | 2-53 and 2-54 |
| 2-69 and 2-70 | 2-69 and 2-70 |
| 2-111 through 2-114 | 2-111 through 2-114 |
| 2-143 and 2-144 | 2-143 and 2-144 |

Distribution Statement A: Approved for public release; distribution is unlimited.

| Remove Pages | Insert Pages |
|---|---|
| 2-155 through 2-158 | 2-155 through 2-158 |
| 2-229 and 2-230 | 2-229 and 2-230 |
| 2-251 and 2-252 | 2-251 and 2-252 |
| 2-258.21 and 2-258.22 | 2-258.21 and 2-258.22 |
| 2-263 through 2-266 | 2-263 through 2-266 |
| 2-285 and 2-286 | 2-285 and 2-286 |
| 2-297 and 2-298 | 2-297 and 2-298 |
| 2-303 and 2-304 | 2-303 and 2-304 |
| None | 2-312.3 and 2-312.4 |
| 2-331 and 2-332 | 2-331 and 2-332 |
| None | 2-332.1 through 2-332.6 |
| 3-35 and 3-36 | 3-35 and 3-36 |
| 3-38.31 through 3-38.34 | 3-38.31 through 3-38.34 |
| 3-40.1 and 3-40.2 | 3-40.1 and 3-40.2 |
| 3-41/(3-42 blank) | 3-41/(3-42 blank) |
| 3-50.11 and 3-50.12 | 3-50.11 and 3-50.12 |
| 3-55 and 3-56 | 3-55 and 3-56 |
| None | 3-56.1 and 3-56.2 |
| 3-77 through 3-86 | 3-77 through 3-86 |
| 3-95 and 3-96 | 3-95 and 3-96 |
| 4-1 and 4-2 | 4-1 and 4-2 |
| 5-11 and 5-12 | 5-11 and 5-12 |
| 5-21 through 5-24 | 5-21 through 5-24 |
| 5-33 and 5-34 | 5-33 and 5-34 |
| 5-34.1/(5-34.2 blank) | 5-34.1 and 5-34.2 |
| 5-35 through 5-38 | 5-35 through 5-38 |
| 5-55 through 5-60 | 5-55 through 5-60 |
| 5-67 and 5-68 | 5-67 and 5-68 |
| 6-1 and 6-2 | 6-1 and 6-2 |
| 6-11 and 6-12 | 6-11 and 6-12 |
| 6-12.1/(6-12.2 blank) | 6-12.1/(6-12.2 blank) |
| A-1 through A-3/(A-4 blank) | A-1 through A-3/(A-4 blank) |
| B-1 through B-4 | B-1 through B-4 |
| B-13 and B-14 | B-13 and B-14 |
| D-1 through D-4 | D-1 through D-4 |
| E-11 and E-12 | E-11 and E-12 |
| E-17/(E-18 blank) | E-17/(E-18 blank) |
| F-3 through F-6 | F-3 through F-6 |
| F-11 and F-12 | F-11 and F-12 |
| F-15 through F-18 | F-15 through F-18 |
| I-1 through I-6 | I-1 through I-6 |
| J.1-1 and J.1-2 | J.1-1 and J.1-2 |
| K.1-1 through K.1-4 | K.1-1 through K.1-4 |
| M-187 through M-190 | M-187 through M-190 |
| Index-1 through Index-19/(Index-20 blank) | Index-1 through Index-19/(Index-20 blank) |
| DA Form 2028-2 Sample Part 1/2 | DA Form 2028 Sample Part 1/2 |
| DA Form 2028-2 Part 1/2 | DA Form 2028 Part 1/2 (3) |
| Conversion Chart/blank | Conversion Chart/blank |
| Measurement/PIN | Measurement/PIN |
| Front Cover/blank | Front Cover/blank |

4. File this change in front of the publication.

By Order of the Secretary of the Army:

GEORGE W. CASEY, JR.
*General, United States Army*
*Chief of Staff*

Official:

JOYCE E. MORROW
*Administrative Assistant to the*
*Secretary of the Army*
0727602

Distribution:

To be distributed in accordance with the initial distribution number (IDN) 371931 requirements for TM 9-2350-314-10.

TM 9-2350-314-10
C4
HEADQUARTERS
DEPARTMENT OF THE ARMY
WASHINGTON, D.C., 15 JULY 2005

CHANGE
NO. 4

# OPERATOR'S MANUAL
# FOR
# HOWITZER, MEDIUM,
# SELF-PROPELLED: 155MM M109A6
# (NSN 2350-01-305-0028) (EIC: 3FC)

TM 9-2350-314-10, February 1999, is changed as follows:

1. The purpose of this change is to update TM 9-2350-314-10.

2. New or changed material is indicated by a vertical bar in the outside margin of text changes and by a hand symbol beside illustration changes.

3. Remove the old page and insert the new page as indicated below:

| Remove Pages | Insert Pages |
|---|---|
| m and n | m and n |
| A through D | A through D |
| i through (v blank)/1-0 | i through 1-0 |
| 1-5 through 1-8 | 1-5 through 1-8 |
| None | F.1-1 through F.1-30 |
| None | G.2-1 through G.2-7/(G.2-8 blank) |
| None | G.3-1 through G.3-7/(G.3-8 blank) |
| None | J.1-1 through J.1-8 |
| None | L-1 through L-209/(L-210 blank) |
| None | M-1 through M-209/(M-210 blank) |
| Index-1 and Index-2 | Index-1 and Index-2 |
| None | Index-15 through Index-19/(Index-20 blank) |
| Measurement page/Back cover (PIN) | Measurement page/Back cover (PIN) |

4. File this change in front of the publication.

Distribution Statement A: Approved for public release; distribution is unlimited.

By Order of the Secretary of the Army:

PETER J. SCHOOMAKER
*General, United States Army*
*Chief of Staff*

Official:

SANDRA R. RILEY
*Administrative Assistant to the*
*Secretary of the Army*
0506705

DISTRIBUTION: To be distributed in accordance with the Initial Distribution Number (IDN) 371931, requirements for TM 9-2350-314-10.

TM 9-2350-314-10
C3
HEADQUARTERS
DEPARTMENT OF THE ARMY
WASHINGTON, D.C., 30 SEPTEMBER, 2004

CHANGE
NO. 3

# OPERATOR'S MANUAL
# FOR
# HOWITZER, MEDIUM,
# SELF-PROPELLED: 155MM M109A6
# (NSN 2350-01-305-0028) (EIC: 3FC)

TM 9-2350-314-10, February 1999, is changed as follows:

1. The purpose of this change is to update TM 9-2350-314-10.

2. New or changed material is indicated by a vertical bar in the outside margin of text changes and by a hand symbol beside illustration changes.

3. Remove the old page and insert the new page as indicated below:

| Remove Pages | Insert Pages |
|---|---|
| k and l | k and l |
| none | m and n |
| A through D | A through D |
| i and ii | i and ii |
| 1-1 through 1-8 | 1-1 through 1-8 |
| 1-11 through 1-14 | 1-11 through 1-14 |
| 1-17 and 1-18 | 1-17 and 1-18 |
| none | 1-18.1 and 1-18.2 |
| 1-19 and 1-20 | 1-19 and 1-20 |
| 1-25 and 1-26 | 1-25 and 1-26 |
| none | 1-38.1 and 1-38.2 |
| 1-39 and 1-40 | 1-39 and 1-40 |
| none | 2-8.1 and 2-8.2 |
| 2-15 and 2-16 | 2-15 and 2-16 |
| 2-27 and 2-28 | 2-27 and 2-28 |
| none | 2-28.1 and 28.2 |
| 2-29 and 2-30 | 2-29 and 2-30 |
| 2-37 through 2-40 | 2-37 through 2-40 |
| 2-47 and 2-48 | 2-47 and 2-48 |
| 2-67 and 2-68 | 2-67 and 2-68 |
| 2-123 and 2-124 | 2-123 and 2-124 |
| 2-129 and 2-130 | 2-129 and 2-130 |
| 2-133 and 2-134 | 2-133 and 2-134 |
| 2-181 and 2-182 | 2-181 and 2-182 |

Distribution Statement A: Approved for public release; distribution is unlimited.

| | |
|---|---|
| none | 2-258.1 through 2-258.143/ (2-258.144 blank) |
| 2-259 through 2-262 | 2-259 through 2-262 |
| 2-265 through 2-268 | 2-265 through 2-268 |
| 2-293 through 2-298 | 2-293 through 2-298 |
| 2-300.1/(2-300.2 blank) | 2-300.1/(2-300.2 blank) |
| 2-303 through 2-308 | 2-303 through 2-308 |
| 2-316.3 and 2-316.4 | 2-316.3 through 2-316.9/ (2-316.10 blank) |
| 2-317and 2-318 | 2-317 and 2-318 |
| 2-321 through 2-324 | 2-321 through 2-324 |
| 2-331 and 2-332 | 2-331 and 2-332 |
| 2-335 and 2-336 | 2-335 and 2-336 |
| 3-1 and 3-2 | 3-1 and 3-2 |
| none | 3-38.1 through 3-38.34 |
| 3-39 and 3-40 | 3-39 and 3-40 |
| none | 3-40.1 and 3-40.2 |
| 3-3-41 and 3-42 | 3-41/(3-42 blank) |
| none | 3-50.3 through 3-50.12 |
| 3-61 and 3-62 | 3-61 and 3-62 |
| 3-67 and 3-68 | 3-67 and 3-68 |
| 3-77 through 3-84 | 3-77 through 3-84 |
| 3-91 and 3-92 | 3-91 and 3-92 |
| 3-95 and 3-96 | 3-95 and 3-96 |
| 3-129 through 3-134 | 3-129 through 3-134 |
| 3-157 through 3-162 | 3-157 through 3-162 |
| 5-21 through 5-26.2/(5-26.2 blank) | 5-21 through 5-26.2/(5-26.2 blank) |
| 5-57 and 5-58 | 5-57 and 5-58 |
| A-1 and A-2 | A-1 and A-2 |
| B-1 and B-2 | B-1 and B-2 |
| B-13 and B14 | B-13 and b14 |
| D-1 through D-5/(D-6 blank) | D-1 through D-5/(D-6 blank) |
| E-3 and E-4 | E-3 and E-4 |
| E-11 and E-12 | E-11 and E-12 |
| F-1 through F-6 | F-1 through F-6 |
| F-9 through F-18 | F-9 through F-18 |
| F-23 through F-26 | F-23 through F-26 |
| F-29 through F-31/(F-32 blank) | F-29 through F-31/(F-32 blank) |
| none | G.1-1 through G.1-7/(G.1-8 blank) |
| I-3 and I-4 | I-3 and I-4 |
| I-19 and I-20 | I-19 and I-20 |
| J-1 and J-2 | J-1 and J-2 |
| none | K.1-1 through K.1-7/(k.1-8 blank) |
| Index-1 through Index-13/(Index-14 blank) | Index-1 through Index-14 |
| Measurement page/Back cover (PIN) | Measurement page/Back cover (PIN) |
| Front Cover/Blank | Front Cover/Blank |

4. File this change in front of the publication.

By Order of the Secretary of the Army:

PETER J. SCHOOMAKER
*General, United States Army*
*Chief of Staff*

Official:

JOEL B. HUDSON
*Administrative Assistant to the*
*Secretary of the Army*
0420302

DISTRIBUTION: To be distributed in accordance with the Initial Distribution Number (IDN) 371238, requirements for TM 9-2350-314-10

TM 9-2350-314-10
C2
HEADQUARTERS
DEPARTMENT OF THE ARMY
WASHINGTON, D.C., 15 JANUARY, 2002

CHANGE
NO.2

# OPERATOR'S MANUAL
# FOR
# HOWITZER, MEDIUM,
# SELF-PROPELLED: 155MM M109A6
# (NSN 2350-01-305-0028) (EIC: 3FC)

TM 9-2350-314-10, February 1999, is changed as follows:

1. The purpose of this change is to update TM 9-2350-314-10.

2. New or changed material is indicated by a vertical bar in the outside margin of text changes and by a hand symbol beside illustration changes.

3. Remove the old page and insert the new page as indicated below:

| Remove Pages | Insert Pages |
|---|---|
| a through d | a through d |
| k/(l blank) | k and l |
| A through C/(D blank) | A through C/(D blank) |
| 1-0 | (v blank)/1-0 |
| 1-1 through 1-6 | 1-1 through 1-6 |
| 1-11 and 1-12 | 1-11 and 1-12 |
| 1-15 and 1-16 | 1-15 and 1-16 |
| 1-21 and 1-22 | 1-21 and 1-22 |
| 1-25 and 1-26 | 1-25 and 1-26 |
| 2-19 through 2-24 | 2-19 through 2-24 |
| 2-35 and 2-36 | 2-35 and 2-36 |
| 2-39 and 2-40 | 2-39 and 2-40 |
| 2-47 through 2-50 | 2-47 through 2-50 |
| 2-54.1/(2-54.2 blank) | 2-54.1 and 2-54.2 |
| None | 2-62.1 and 2-62.2 |
| 2-63 and 2-64 | 2-63 and 2-64 |
| 2-69 and 2-70 | 2-69 and 2-70 |
| 2-103 through 2-106 | 2-103 through 2-106 |
| 2-117 and 2-118 | 2-117 and 2-118 |
| 2-129 and 2-130 | 2-129 and 2-130 |
| 2-133 and 2-134 | 2-133 and 2-134 |
| 2-137 and 2-138 | 2-137 and 2-138 |
| 2-143 through 2-146 | 2-143 through 2-146 |
| 2-157 and 2-158 | 2-157 and 2-158 |
| 2-179 through 2-182 | 2-179 through 2-182 |
| 2-209 through 2-212 | 2-209 through 2-212 |
| 2-229 and 2-230 | 2-229 and 2-230 |
| 2-245 and 2-246 | 2-245 and 2-246 |
| 2-251 and 2-252 | 2-251 and 2-252 |
| 2-265 through 2-276 | 2-265 through 2-276 |
| 2-279 and 2-280 | 2-279 and 2-280 |
| 2-285 and 2-286 | 2-285 and 2-286 |

Distribution Statement A: Approved for public release; distribution is unlimited.

| | |
|---|---|
| None | 2-286.1/(2-286.2 blank) |
| 2-287 through 2-292 | 2-287 through 2-292 |
| None | 2-302.1/(2-302.2 blank) |
| 2-303 and 2-304 | 2-303 and 2-304 |
| 2-311 through 2-314 | 2-311 through 2-314 |
| 2-325 through 2-328 | 2-325 through 2-328 |
| 3-33 and 3-34 | 3-33 and 3-34 |
| 3-51 through 3-56 | 3-51 through 3-56 |
| 3-69 and 3-70 | 3-69 and 3-70 |
| 3-81 and 3-82 | 3-81 and 3-82 |
| 3-87 through 3-90 | 3-87 through 3-90 |
| 3-93 through 3-96 | 3-93 through 3-96 |
| 3-137 and 3-138 | 3-137 and 3-138 |
| 3-161 and 3-162 | 3-161 and 3-162 |
| 5-5 and 5-6 | 5-5 and 5-6 |
| 5-21 through 5-24 | 5-21 through 5-24 |
| 5-29 and 5-30 | 5-29 and 5-30 |
| None | 5-30.1/(5-30.2 blank) |
| 5-33 and 5-34 | 5-33 and 5-34 |
| None | 5-34.1/(5-34.2 blank) |
| 5-35 through 5-36.2 | 5-35 through 5-36.2 |
| None | 5-36.3/(5-36.4 blank) |
| 5-37 through 5-40 | 5-37 through 5-40 |
| 5-45 and 5-46 | 5-45 and 5-46 |
| 5-53 through 5-56 | 5-53 through 5-56 |
| None | 5-56.1 through 5-56.4 |
| 5-57 through 5-60 | 5-57 through 5-60 |
| 5-67 through 5-70.2 | 5-67 through 5-70.2 |
| A-1 through A-3/(A-4 blank) | A-1 through A-3/(A-4 blank) |
| B-1 and B-2 | B-1 and B-2 |
| B-5 through B-8 | B-5 through B-8 |
| D-3 through D-5/(D-6 blank) | D-3 through D-5/(D-6 blank) |
| E-3 through E-8 | E-3 through E-8 |
| E-11 and E-12 | E-11 and E-12 |
| None | E-12.1/(E-12.2 blank) |
| E-13 and E-14 | E-13 and E-14 |
| H-1 and H-2 | H-1 and H-2 |
| I-1 through I-4 | I-1 through I-4 |
| I-15 through I-22 | I-15 through I-22 |
| I-31 and I-32 | I-31 and I-32 |
| I-35 and I-36 | I-35 and I-36 |
| Index-3 through Index 12 | Index-3 through Index-12 |

4. File this change in front of the publication.

By Order of the Secretary of the Army:

ERIC K. SHINSEKI
*General, United States Army*
*Chief of Staff*

Official:

JOEL B. HUDSON
*Administrative Assistant to the*
*Secretary of the Army*
0133203

DISTRIBUTION: To be distributed in accordance with IDN 371931 requirements for TM 9-2350-314-10.

TM 9-2350-314-10
C1
HEADQUARTERS
DEPARTMENT OF THE ARMY
WASHINGTON, D.C., 1 APRIL 2001

CHANGE
NO.1

# OPERATOR'S MANUAL
# FOR
# HOWITZER, MEDIUM,
# SELF-PROPELLED: 155MM M109A6
# (NSN 2350-01-305-0028) (EIC: 3FC)

TM 9-2350-314-10, February 1999, is changed as follows:

1. The purpose of this change is to update TM 9-2350-314-10.
2. New or changed material is indicated by a vertical bar in the outside margin of text changes and by a hand symbol beside illustration changes.
3. Remove the old page and insert the new page as indicated below:

| Remove Pages | Insert Pages |
|---|---|
| c through f | c through f |
| i and j | i and j |
| none | A through C/(D blank) |
| i and ii | i and ii |
| 1-1 and 1-2 | 1-1 and 1-2 |
| 1-7 and 1-8 | 1-7 and 1-8 |
| 1-21 and 1-22 | 1-21 and 1-22 |
| 1-35 and 1-36 | 1-35 and 1-36 |
| 2-5 and 2-6 | 2-5 and 2-6 |
| 2-11 and 2-12 | 2-11 and 2-12 |
| 2-19 through 2-32 | 2-19 through 2-32 |
| 2-35 through 2-38 | 2-35 through 2-38 |
| 2-45 through 2-56 | 2-45 through 2-56 |
| 2-61 through 2-68 | 2-61 through 2-68 |
| 2-75 through 2-86 | 2-74.1 through 2-86 |
| 2-89 through 2-92 | 2-89 through 2-92 |
| 2-113 and 2-114 | 2-113 and 2-114 |
| 2-131 and 2-132 | 2-131 and 2-132 |
| 2-137 through 2-148 | 2-137 through 2-148 |
| 2-151 through 2-200 | 2-151 through 2-200 |
| 2-203 through 2-258 | 2-203 through 2-258 |
| 2-283 and 2-284 | 2-283 and 2-284 |
| 2-293 and 2-294 | 2-293 and 2-294 |

Distribution Statement A: Approved for public release; distribution is unlimited.

| Remove Pages | Insert Pages |
|---|---|
| 2-297 through 2-304 | 2-297 through 2-304 |
| 2-309 through 2-316 | 2-309 through 2-316.4 |
| 2-325 through 2-332 | 2-325 through 2-332 |
| 2-337 and 2-338 | 2-337 and 2-338 |
| 3-3 through 3-10 | 3-3 through 3-10 |
| 3-17 through 3-22 | 3-17 through 3-22 |
| 3-25 through 3-40 | 3-24.1 through 3-40 |
| 3-43 through 3-48 | 3-43 through 3-48 |
| 3-51 and 3-52 | 3-50.1 through 3-52 |
| 3-59 through 3-62 | 3-59 through 3-62.1/(3-62.2 blank) |
| 3-77 and 3-78 | 3-77 and 3-78 |
| 3-81 and 3-82 | 3-81 and 3-82 |
| 3-85 and 3-86 | 3-85 and 3-86 |
| 3-95 through 3-102 | 3-95 through 3-102 |
| 3-115 and 3-116 | 3-115 and 3-116 |
| 3-133 through 3-138 | 3-133 through 3-138 |
| 3-159 and 3-160 | 3-159 and 3-160 |
| 5-1 through 5-10 | 5-1 through 5-10 |
| 5-21 through 5-30 | 5-21 through 5-30 |
| 5-33 through 5-38 | 5-33 through 5-38 |
| 5-45 and 5-46 | 5-45 and 5-46 |
| 5-51 and 5-52 | 5-51 and 5-52 |
| 5-57 through 5-70 | 5-57 through 5-70.2 |
| A-1 and A-2 | A-1 through A-3/(A-4 blank) |
| B-3 through B-6 | B-3 through B-6 |
| B-13 and B-14 | B-13 and B-14 |
| D-3 and D-4 | D-3 and D-4 |
| E-3 and E-4 | E-3 and E-4 |
| F-1 through F-6 | F-1 through F-6 |
| F-9 and F-10 | F-9 and F-10 |
| F-13 and F-14 | F-13 and F-14 |
| F-19 and F-20 | F-19 and F-20 |
| F-23 and F-24 | F-23 and F-24 |
| F-27 and F-28 | F-27 and F-28 |
| G-1 and G-2 | G-1 and G-2 |
| H-1 and H-2 | H-1 and H-2 |
| I-1 through I-8 | I-1 through I-8 |
| I-11 through I-16 | I-11 through I-16 |

| Remove Pages | Insert Pages |
|---|---|
| I-21 through I-24 | I-21 through I-24 |
| J-1 through J-4 | J-1 through J-8 |
| none | K-1 through K-9 (K-10 blank) |
| Index-1 through Index-13/(Index-14 blank) | Index-1 through Index-13/(Index-14 blank) |
| DA2028-2 form - sample | DA2028-2 form - sample |
| DA2028-2 form (4 copies) | DA2028-2 form (4 copies) |
| Cover/ blank | Cover/ blank |

4. File this change in front of the publication.

By Order of the Secretary of the Army:

ERIC K. SHINSEKI
*General, United States Army*
*Chief of Staff*

Official:

JOEL B. HUDSON
*Administrative Assistant to the*
*Secretary of the Army*
0133203

DISTRIBUTION: To be distributed in accordance with IDN 371931 requirements for TM 9-2350-314-10.

INSERT LATEST CHANGED PAGES.
DESTROY SUPERSEDED PAGES

# LIST OF EFFECTIVE PAGES

Note: The portion of the text affected by the changes is indicated by a vertical line in the outer margin of the page. Changes to illustrations are indicated by miniature pointing hands. Changes to wiring diagrams are indicated by shaded areas.

Date of issue for original and changed pages are:

Original ..... 0 .....8 February, 1999
Change ..... 1 ..... 1 April, 2001
Change ..... 2 ..... 15 January 2002
Change ..... 3 ..... 30 September, 2004
Change ..... 4 .....15 July, 2005
Change ..... 5 ..... 30 June, 2008
Change…….6…… 30 September 2008

TOTAL NUMBER OF PAGES IN THIS PUBLICATION IS 2,252 CONSISTING OF THE FOLLOWING:

| Page No. | *Change No. |
|---|---|
| Cover/blank | 5 |
| Change 6 Errata Added(2) | 6 |
| Change 5 Errata Added (4) | 5 |
| Change 4 Errata (2) | 4 |
| Change 3 Errata (4) | 3 |
| Change 2 Errata (4) | 2 |
| Change 1 Errata (4) | 1 |
| a - c | 5 |
| d | 1 |
| e – h | 5 |
| i – j | 0 |
| k | 3 |
| l | 5 |
| m | 5 |
| n | 5 |
| o – r | 5 |
| A – F blank | 6 |
| i | 6 |
| ii - iii | 6 |
| iv | 0 |
| v | 0 |
| 1-0 | 4 |
| 1-1 – 1-2 | 5 |
| 1-3 – 1-4 | 3 |
| 1-5 – 1-10 | 5 |
| 1-11 | 3 |
| 1-12 - 1-14 | 5 |
| 1-15 | 2 |
| 1-16 | 0 |
| 1-17 | 3 |
| 1-18 | 0 |
| 1-18.1 – 1-18.2 | 5 |
| 1-19 | 5 |
| 1-20 | 0 |
| 1-21 | 2 |
| 1-22 – 1-25 | 0 |
| 1-26 | 5 |
| 1-27 – 1-35 | 0 |
| 1-36 | 1 |
| 1-37 | 0 |
| 1-38 | 5 |
| 1-38.1 Added | 5 |
| 1-38.2 | 5 |
| 1-39 | 5 |
| 1-40 – 1-43/(1-44 blank) | 0 |
| 2-1 – 2-4 | 0 |
| 2-5 | 1 |
| 2-6 – 2-8 | 0 |
| 2-8.1 – 2-8.2 | 3 |
| 2-9 – 2-11 | 0 |
| 2-12 | 1 |
| 2-13 – 2-14 | 5 |
| 2-14.1 Added | 5 |
| 2-14.2 Blank Added | 5 |
| 2-15 | 5 |
| 2-16 | 3 |
| 2-17 – 2-18 | 0 |
| 2-19 | 2 |
| 2-20 | 1 |
| 2-21 – 2-23 | 2 |
| 2-24 | 5 |
| 2-25 | 1 |
| 2-26 | 0 |
| 2-27 | 1 |
| 2-28 | 5 |
| 2-28.1 – 2-28.2 Added | 5 |
| 2-28.3 – 2-28.4 Added | 5 |
| 2-29 | 5 |
| 2-30 | 1 |
| 2-31 | 5 |
| 2-32 | 1 |
| 2-33 – 2-34 | 0 |
| 2-35 | 2 |
| 2-36 – 2-37 | 1 |
| 2-38 | 5 |
| 2-39 | 5 |
| 2-40 | 2 |
| 2-41 – 2-45 | 0 |
| 2-46 | 1 |
| 2-47 – 2-48 | 3 |
| 2-49 | 2 |
| 2-50 – 2-51 | 1 |
| 2-52 – 2-53 | 0 |
| 2-54 | 5 |
| 2-54.1 – 2-54.2 | 2 |
| 2-55 – 2-56 | 1 |
| 2-57 | 0 |
| 2-58 – 2-61 | 2 |
| 2-62 | 1 |
| 2-62.1 – 2-62.2 Added | 2 |
| 2-63 | 2 |
| 2-64 – 2-65 | 0 |
| 2-66 | 1 |
| 2-68 | 1 |
| 2-69 | 5 |
| 2-70 – 2-74 | 0 |

*Zero in this column indicates an original page

| Page No. | *Change No. |
|---|---|
| 2-74.1 – 2-74.2 Added | 1 |
| 2-75 | 1 |
| 2-76 – 2-77 | 0 |
| 2-78 | 1 |
| 2-79 | 0 |
| 2-80 – 2-82 | 1 |
| 2-83 | 0 |
| 2-84 – 2-85 | 1 |
| 2-86 – 2-89 | 0 |
| 2-90 – 2-92 | 1 |
| 2-93 – 2-103 | 0 |
| 2-104 – 2-105 | 2 |
| 2-106 – 2-110 | 0 |
| 2-111 | 5 |
| 2-112 – 2-113 | 0 |
| 2-114 | 5 |
| 2-115 – 2-117 | 0 |
| 2-118 | 2 |
| 2-119 – 2-122 | 0 |
| 2-123 – 2-124 | 3 |
| 2-125 – 2-128 | 0 |
| 2-129 | 3 |
| 2-130 | 2 |
| 2-131 | 0 |
| 2-132 | 1 |
| 2-133 | 3 |
| 2-134 | 2 |
| 2-135 – 2-136 | 0 |
| 2-137 | 2 |
| 2-138 – 2-139 | 1 |
| 2-140 | 0 |
| 2-141 | 1 |
| 2-142 | 0 |
| 2-142.1 – 2-142.2 Added | 1 |
| 2-143 | 1 |
| 2-144 | 5 |
| 2-145 | 2 |
| 2-146 – 2-147 | 1 |
| 2-148 – 2-150 | 0 |
| 2-151 – 2-152 | 1 |
| 2-152.1 Added | 1 |
| 2-152.2 Blank Added | 1 |
| 2-153 – 2-154 | 1 |
| 2-155 | 0 |
| 2-156 – 2-157 | 5 |
| 2-158 | 2 |
| 2-158.1 – 2-158.3 Added | 1 |
| 2-158.4 Blank Added | 1 |
| 2-159 | 0 |
| 2-160 | 1 |
| 2-161 Deleted | 1 |
| 2-162 | 1 |
| 2-162.1 – 2-162.4 Added | 1 |
| 2-163 – 2-164 | 1 |
| 2-164.1 – 2-164.2 Added | 1 |
| 2-165 – 2-168 | 1 |
| 2-168.1 – 2-168.5 Added | 1 |
| 2-168.6 Blank Added | 1 |
| 2-169 – 2-173 | 1 |
| 2-174 | 0 |
| 2-175 – 2-178 | 1 |
| 2-179 | 2 |
| 2-180 – 2-181 | 1 |
| 2-182 | 3 |
| 2-183 – 2-185 | 1 |
| 2-186 | 0 |
| 2-187 – 2-191 | 1 |
| 2-192 | 0 |
| 2-193 – 2-200 | 1 |
| 2-201 – 2-203 | 0 |
| 2-204 | 1 |
| 2-205 | 0 |
| 2-206 – 2-208 | 1 |
| 2-208.1 Added | 1 |
| 2-208.2 Blank Added | 1 |
| 2-209 | 1 |
| 2-210 – 2-211 | 2 |
| 2-212 – 2-218 | 1 |
| 2-218.1 Added | 1 |
| 2-218.2 Blank Added | 1 |
| 2-219 – 2-224 | 1 |
| 2-224.1 Added | 1 |
| 2-224.2 Blank | 1 |
| 2-225 Deleted | 1 |
| 2-226 – 2-228 | 1 |
| 2-229 | 5 |
| 2-230 | 2 |
| 2-231 | 1 |
| 2-232 Deleted | 1 |
| 2-233 – 2-235 | 1 |
| 2-236 – 2-237 | 0 |
| 2-238 Deleted | 1 |
| 2-239 – 2-240 | 1 |
| 2-241 | 0 |
| 2-242 – 2-244 | 1 |
| 2-244.1 – 2-244.2 Added | 1 |
| 2-245 | 2 |
| 2-246 – 2-247 | 1 |
| 2-248 – 2-249 | 0 |
| 2-250 | 1 |
| 2-250.1 – 2-250.2 Added | 1 |
| 2-251 | 5 |
| 2-252 | 2 |
| 2-253 – 2-256 | 1 |
| 2-257 | 0 |
| 2-258 | 1 |
| 2-258.1 – 2-258.21 Added | 3 |
| 2-258.22 | 5 |
| 2-258.23 - 2-258.144 Blank | 3 |
| 2-259 | 3 |
| 2-260 – 2-261 | 0 |
| 2-262 | 3 |
| 2-263 – 2-265 | 5 |
| 2-266 – 2-267 | 2 |
| 2-268 | 3 |
| 2-269 | 0 |
| 2-270 | 2 |
| 2-271 | 0 |
| 2-272 – 2-276 | 2 |
| 2-277 – 2-278 | 0 |
| 2-279 | 2 |
| 2-280 – 2-283 | 0 |
| 2-284 | 1 |
| 2-285 | 0 |
| 2-286 | 5 |
| 2-286.1 Blank Added | 2 |
| 2-286.2 Added | 2 |
| 2-287 | 0 |
| 2-288 – 2-291 | 2 |
| 2-292 | 0 |
| 2-293 – 2-296 | 3 |
| 2-297 | 5 |
| 2-298 – 2-300 | 1 |
| 2-300.1Blank | 3 |
| 2-300.2 | 1 |
| 2-301 – 2-302 | 1 |
| 2-302.1 Added | 2 |
| 2-302.2 Blank | 3 |
| 2-303 | 5 |
| 2-304 | 0 |
| 2-305 – 2-306 | 5 |
| 2-307 | 3 |
| 2-308 | 0 |
| 2-309 | 1 |
| 2-310 | 0 |
| 2-311 – 2-312 | 2 |
| 2-312.1 – 2-312.2 Added | 1 |
| 2-312.3 – 2-312.4 Added | 5 |
| 2-313 – 2-314 | 2 |
| 2-315 – 2-316 | 1 |
| 2-316.1 – 2-316.2 Added | 1 |
| 2-316.3 | 1 |
| 2-316.4 | 3 |
| 2-316.5 – 2-316.9 Added | 3 |
| 2-316.10 Blank Added | 3 |
| 2-317 | 3 |
| 2-318 – 2-321 | 0 |
| 2-322 – 2-323 | 3 |
| 2-324 – 2-325 | 0 |
| 2-326 – 2-327 | 2 |
| 2-328 – 2-330 | 1 |
| 2-331 – 2-332 | 5 |

*Zero in this column indicates an original page

| Page No. | *Change No. |
|---|---|
| 2-332.1 – 2-332.6 Added | 5 |
| 2-333 – 2-335 | 0 |
| 2-336 | 3 |
| 2-337 | 1 |
| 2-338 – 2-343/(2-344 Blank) | 0 |
| 3-1 – 3-2 | 3 |
| 3-3 – 3-8 | 1 |
| 3-8.1 - 3-8.3 Added | 1 |
| 3-8.4 Blank Added | 1 |
| 3-9 – 3-10 | 1 |
| 3-11 – 3-17 | 0 |
| 3-18 – 3-19 Deleted | 1 |
| 3-20 – 3-21 | 0 |
| 3-22 | 1 |
| 3-23 – 3-24 | 0 |
| 3-24.1 – 3-24.2 Added | 1 |
| 3-25 – 3-27 | 1 |
| 3-28 | 0 |
| 3-29 – 3-32 | 1 |
| 3-33 | 2 |
| 3-34 Deleted | 1 |
| 3-35 | 5 |
| 3-36 | 1 |
| 3-37 | 0 |
| 3-38 | 1 |
| 3-38.1 – 3-38.30 Added | 3 |
| 3-38.31 | 5 |
| 3-38.32 | 3 |
| 3-38.33 | 5 |
| 3-38.34 | .3 |
| 3-39 | 3 |
| 3-40 | 1 |
| 3-40.1 | 3 |
| 3-40.2 | 5 |
| 3-41 – 3-42 Blank | 5 |
| 3-43 | 1 |
| 3-44 | 0 |
| 3-45 – 3-48 | 1 |
| 3-49 – 3-50 | 0 |
| 3-50.1 – 3-50.2 | 1 |
| 3-50.3 – 3-50.10 Added | 3 |
| 3-50.11 – 3-50.12 | 5 |
| 3-51 | 1 |
| 3-52 – 3-55 | 2 |
| 3-56 | 5 |
| 3-56.1 – 3-56.2 Added | 5 |
| 3-57 – 3-58 | 0 |
| 3-59 | 1 |
| 3-60 | 0 |
| 3-61 – 3-62 | 3 |
| 3-62.1 - 2-62.2 Blank Added | 1 |
| 3-63 – 3-66 | 0 |
| 3-67 – 3-68 | 3 |
| 3-69 | 0 |
| 3-70 | 2 |
| 3-71 – 3-76 | 0 |
| 3-77 – 3-83 | 5 |
| 3-84 | 0 |
| 3-85 | 5 |
| 3-86 | 0 |
| 3-87 – 3-89 | 2 |
| 3-90 | 0 |
| 3-91 | 3 |
| 3-92 – 3-93 | 0 |
| 3-94 | 2 |
| 3-95 | 5 |
| 3-96 | 0 |
| 3-97 – 3-101 | 1 |
| 3-102 – 3-115 | 0 |
| 3-116 | 1 |
| 3-117 – 3-128 | 0 |
| 3-129 – 3-133 | 3 |
| 3-134 – 3-136 | 1 |
| 3-137 | 2 |
| 3-138 – 3-156 | 0 |
| 3-157 – 3-162 | 3 |
| 4-1 | 5 |
| 4-2 – 4-6 | 0 |
| 5-1 | 0 |
| 5-2 – 5-4 | 1 |
| 5-5 – 5-6 | 2 |
| 5-7 – 5-10 | 1 |
| 5-11 | 0 |
| 5-12 | 5 |
| 5-13 – 5-20 | 0 |
| 5-21 | 5 |
| 5-22 | 3 |
| 5-23 – 5-24 | 5 |
| 5-25 | 1 |
| 5-26 | 3 |
| 5-26.1 - 5-26.2 Blank Added | 3 |
| 5-27 | 0 |
| 5-28 | 1 |
| 5-29 – 5-30 | 2 |
| 5-30.1 - 5-20.2 Blank Added | 2 |
| 5-31 – 5-32 | 0 |
| 5-33 | 1 |
| 5-34 | 5 |
| 5-34.1 – 5-34.2 Added | 5 |
| 5-35 – 5-36 | 5 |
| 5-36.1 – 5-36.2 | 2 |
| 5-36.3 Added | 2 |
| 5-5-36.4 Blank Added | 2 |
| 5-37 | 5 |
| 5-38 – 5-40 | 2 |
| 5-41 – 5-44 | 0 |
| 5-45 | 2 |
| 5-46 – 5-51 | 0 |
| 5-52 | 1 |
| 5-53 | 0 |
| 5-54 – 5-55 | 2 |
| 5-56 | 5 |
| 5-56.1 – 5-56.4 Added | 2 |
| 5-57 | 5 |
| 5-58 | 3 |
| 5-59 | 5 |
| 5-60 | 1 |
| 5-61 | 0 |
| 5-62 | 1 |
| 5-63 | 0 |
| 5-64 – 5-65 | 1 |
| 5-66 | 0 |
| 5-67 | 5 |
| 5-68 | 1 |
| 5-69 – 5-70 | 2 |
| 5-70.1 | 2 |
| 5-70.2 Added | 1 |
| 5-71 – 5-86 | 0 |
| 6-1 – 6-2 | 5 |
| 6-3 – 6-11 | 0 |
| 6-12 | 5 |
| 6-12.1 Added | 5 |
| 6-12.2 Blank | 5 |
| 6-13 – 6-23/6-24 Blank | 0 |
| A-1 – A-4 Blank | 5 |
| B-1 | 0 |
| B-2 – B-3 | 5 |
| B-4 – B-12 | 3 |
| B-13 | 5 |
| B-14 – B-18 | 3 |
| B-4 – B-12 | 3 |
| B-13 | 5 |
| B-14 – B-18 | 3 |
| C-1 – C-8 | 0 |
| D-1 | 0 |
| D-2 – D-3 | 5 |
| D-4 | 2 |
| D-5 - D-6 Blank | 3 |
| E-1 – E-3 | 0 |
| E-4 | 3 |
| E-5 | 2 |
| E-6 – E-7 | 0 |
| E-8 | 2 |
| E-9 – E-11 | 0 |
| E-12 | 5 |
| E-12.1 – E12.2 Blank Added | 2 |
| E-13 | 2 |
| E-14 – E-16 | 0 |
| E-17 – E-18 Blank | 5 |
| F-1 – F-2 | 3 |
| F-3 | 5 |
| F-4 | 3 |

*Zero in this column indicates an original page

| Page No. | *Change No. |
|---|---|
| F-5 | 5 |
| F-6 | 3 |
| F-7 – F-8 | 0 |
| F-9 | 3 |
| F-10 | 1 |
| F-11 | 5 |
| F-12 | 0 |
| F-13 – F-15 | 3 |
| F-16 – F-17 | 5 |
| F-18 | 3 |
| F-19 | 1 |
| F-20 – F-22 | 0 |
| F-23 – F-25 | 3 |
| F-26 - F-27 | 0 |
| F-28 | 1 |
| F-29 | 0 |
| F-30 – F-31 | 3 |
| F-32 Blank | 3 |
| F.1-1 – F.1-30 Added | 4 |
| F.2-1 – F.2-30 Added | 6 |
| G-1 | 1 |
| G-2 – G-7/G-8 Blank | 0 |
| G.1-1 – G.1-7 Added | 3 |
| G.1-8 Blank | 3 |
| G.2-1 – G.2-7 Added | 4 |
| G.2-8 Blank Added | 4 |
| G.3-1 – G.3-7 Added | 4 |
| G.3-8 Blank Added | 4 |
| G.4-1 – G.4-4 Added | 6 |
| H-1 | 2 |
| H-2 | 0 |
| I-1 – I-3 | 5 |
| I-4 | 0 |
| I-5 | 1 |
| I-6 | 5 |
| I-7 | 1 |
| I-8 – I-10 | 0 |
| I-11 | 1 |
| I-12 – I-13 | 0 |
| I-14 – I-15 | 1 |
| I-16 – I-17 | 2 |
| I-18 | 0 |
| I-19 | 2 |
| I-20 | 3 |
| I-21 – I-22 | 2 |
| I-23 | 1 |
| I-24 – I-31 | 0 |
| I-32 | 2 |

| Page No. | *Change No. |
|---|---|
| I-33 – I-35 | 0 |
| I-36 | 2 |
| I-37 – I-38 Blank | 0 |
| J-1 | 3 |
| J-2 – J-8 | 1 |
| J.1-1 | 6 |
| J.1-2 | 4 |
| J.1.-3 – J.1-8 | 4 |
| K-1 – K-9/K-20 Blank | 1 |
| K.1-1 | 5 |
| K.1-2 | 3 |
| K.1-3 | 5 |
| K.1-4 – K.1-7/K.1-8 Blank | 3 |
| L-1 – L-209 Added | 4 |
| L-210 Blank Added | 4 |
| M-1 – M-187 | 4 |
| M-188 | 5 |
| M-189 | 4 |
| M-190 | 5 |
| M-191 - M-209 Added | 4 |
| M-210 Blank Added | 4 |
| N-1 – N-261/N-262 blank | 6 |
| O-1 – O-263/O-264 blank | 6 |
| Index-1 | 6 |
| Index-2 | 5 |
| Index-3 | 3 |
| Index-4 – Index-5 | 5 |
| Index-6 – Index-11 | 3 |
| Index-12 – Index-13 | 5 |
| Index-14 | 3 |
| Index-15 – Index-19 | 4 |
| Index 20 – Index-25 | 6 |
| DA Form 2028 Sample | 5 |
| DA Form 2028 (Parts 1 and 2) (3) | 5 |
| Measurement Page | 0 |
| Back Cover/PIN | 6 |

| Page No. | *Change No. |
|---|---|

*Zero in this column indicates an original page

TECHNICAL MANUAL
No. 9-2350-314-10

HEADQUARTERS
DEPARTMENT OF THE ARMY
Washington, D.C., 8 February 1999

# OPERATOR'S MANUAL

# FOR

# HOWITZER, MEDIUM, SELF-PROPELLED:

# 155MM, M109A6 (NSN 2350-01-305-0028) (EIC: 3FC)

**REPORTING ERRORS AND RECOMMENDING IMPROVEMENTS**

You can help improve this publication. If you find any errors, or if you would like to recommend any improvements to the procedures in this publication, please let us know. The preferred method is to submit your DA Form 2028 (Recommended Changes to Publications and Blank Forms) through the Internet, on the Army Electronic Product Support (AEPS) website. The Internet address is https://aeps.ria.army.mil. The DA Form 2028 is located under the Public Applications section in the AEPS Public Home Page. Fill out the form and click on SUBMIT. Using this form on the AEPS will enable us to respond quickly to your comments and better manage the DA Form 2028 program. You may also mail, e-mail, or fax your comments or DA Form 2028 directly to the U.S. Army TACOM Life Cycle Management Command. The postal mail address is U.S. Army TACOM Life Cycle Management Command, ATTN: AMSTA-LC-LMPP / TECH PUBS, 1 Rock Island Arsenal, Rock Island, IL 61299-7630. The e-mail address is tacomlcmc.daform2028@us.army.mil. The fax number is DSN 793-0726 or Commercial (309) 782-0726.

Distribution Statement A: Approved for public release; distribution is unlimited.

**TABLE OF CONTENTS**

Page

HOW TO USE THIS MANUAL . . . . . iv

**CHAPTER 1 - INTRODUCTION . . . . . 1-1**

Section I. General Information . . . . . 1-1
Section II. Equipment Description . . . . . 1-11
Section III. Principles of Operation . . . . . 1-27
Section IV. Section Drill . . . . . 1-40

**CHAPTER 2 - OPERATING INSTRUCTIONS . . . . . 2-1**

Section I. Description and Use of Operator's Controls and Indicators . . . . . 2-1
Section II. PREVENTIVE MAINTENANCE CHECKS AND SERVICES (PMCS) . . . . . 2-13
Section III. Operation Under Usual Conditions . . . . . 2-76
Section IV. Operation Under Unusual Conditions . . . . . 2-332

**CHAPTER 3 - MAINTENANCE INSTRUCTIONS . . . . . 3-1**

Section I. Lubrication Instructions . . . . . 3-1
Section II. TROUBLESHOOTING PROCEDURES . . . . . 3-1
Section III. Maintenance Procedures . . . . . 3-62.1

**CHAPTER 4 - MAINTENANCE OF AUXILIARY EQUIPMENT . . . . . 4-1**

This manual supersedes TM 9-2350-314-10 dated 25 October 1993, including all changes

**CHAPTER 5 - AMMUNITION** . . . . . **5-1**

Section I. General . . . . . 5-1
Section II. Preparation for Firing . . . . . 5-35
Section III. Maintenance . . . . . 5-64
Section IV. Cannon-launched Guided M712 Projectile, Heat (Copperhead) and M823 Projectile (Training) . . . . . 5-72

**CHAPTER 6 - FOREIGN AMMUNITION (NATO)** . . . . . **6-1**

Section I. General . . . . . 6-1
Section II. Projectiles . . . . . 6-2
Section III. Fuzes . . . . . 6-12.1
Section IV. Propelling Charges . . . . . 6-19

**APPENDIX A - REFERENCES** . . . . . **A-1**

**APPENDIX B - COMPONENTS OF END ITEM (COEI) AND BASIC ISSUE ITEMS (BII) LISTS** . . . . . **B-1**

**APPENDIX C - ADDITIONAL AUTHORIZATION LIST** . . . . . **C-1**

**APPENDIX D - EXPENDABLE/DURABLE SUPPLIES AND MATERIALS LIST** . . . . . **D-1**

**APPENDIX E - STOWAGE AND SIGN GUIDE FOR COMPONENTS OF END ITEM, BASIC ISSUE ITEMS, AND APPLICABLE ADDITIONAL AUTHORIZATION LIST ITEMS** . . . . . **E-1**

**APPENDIX F - EMBEDDED TRAINER** . . . . . **F-1**

**APPENDIX F.1 - EMBEDDED TRAINER (VERSION 7 AND 7P SOFTWARE)** . . . . . **F.1-1**

**APPENDIX F.2 - EMBEDDED TRAINER (VERSION 2 AND 2P SOFTWARE)** . . . . . **F.2-1**

**APPENDIX G - PDIU WARNING MESSAGES AND RECONFIGURATION ADVISOR** . . . . . **G-1**

**APPENDIX G.1 - PDI WARNING MESSAGES AND RECONFIGURATION ADVISOR** . . . . . **G.1-1**

**APPENDIX G.2 - PDIU WARNING MESSAGES AND RECONFIGURATION ADVISOR (VERSION 7 SOFTWARE)** . . . . . **G.2-1**

**APPENDIX G.3 - PDI WARNING MESSAGES AND RECONFIGURATION ADVISOR (VERSION 7P SOFTWARE)** . . . . . **G.3-1**

**APPENDIX G.4 - PDIU/PDI WARNING MESSAGES (VERSION 2 AND 2P SOFTWARE)** . . . . . **G.4-1**

**APPENDIX H - CORROSION PREVENTION CONTROL (CPC)** . . . . . **H-1**

**APPENDIX I - LUBRICATION INSTRUCTIONS** . . . . . **I-1**

**APPENDIX J - AFCS/PDFCS/BCS SPHEROID AND DATUM TABLES** . . . . . **J-1**

**APPENDIX J.1 - AFCS/PDFCS/FDC SPHEROID AND DATUM TABLE FOR VERSION 7 AND 7P AND VERSION 2 AND 2P** . . . . . **J.1-1**

APPENDIX K - M93 CHRONOGRAPH MUZZLE VELOCITY SYSTEM (MVS) . . . . . K-1

APPENDIX K.1 - PDFCS MUZZLE VELOCITY SYSTEM (PMVS) . . . . . K.1-1

APPENDIX L - OPERATION OF AUTOMATIC FIRE CONTROL SYSTEM (AFCS)
(VERSION 7 SOFTWARE) . . . . . L-1

APPENDIX M - OPERATION OF PALADIN DIGITAL FIRE CONTROL SYSTEM (PDFCS)
(VERSION 7P SOFTWARE) . . . . . M-1

APPENDIX N - OPERATION OF AUTOMATIC FIRE CONTROL SYSTEM (AFCS)
(VERSION 2 SOFTWARE) . . . . . N-1

APPENDIX O - OPERATION OF PALADIN DIGITAL FIRE CONTROL SYSTEM (PDFCS)
(VERSION 2P SOFTWARE) . . . . . O-1

ALPHABETICAL INDEX . . . . . Index - 1

ALPHABETICAL INDEX (VERSION 7 AND 7P SOFTWARE) . . . . . Index - 16

ALPHABETICAL INDEX (VERSION 2 AND 2P SOFTWARE) . . . . . Index - 21

# HOW TO USE THIS MANUAL

This operator's manual was designed to provide you with the information you will need to operate and maintain the M109A6 howitzer.

The information contained in this manual is presented in chapters and appendixes. Each chapter is divided into sections to cover the subject or operating procedures for the vehicle systems or components. Where references are made to tables, figures, paragraphs and appendixes, refer to those portions of the text.

To find information relating to a specific component or system:

a. Determine the specific name or function of the component/system.

b. Find the name or function in the Subject Index listing, located at the back of this manual.

c. Refer to appropriate page(s) called out in the Subject Index listing.

To find information pertaining to a broader range of information (such as vehicle troubleshooting, preventive maintenance and vehicle descriptions):

a. Identify the desired topic.

b. Find the general topic in the Table of Contents or in the Front Cover Index (both are located at the front of this manual).

c. Refer to the appropriate page(s) called out in the Table of Contents or identified by the front cover index bleeder page.

**IMPORTANT**

You must read and understand this manual BEFORE operating the M109A6 howitzer.

**Maintenance**

a. Throughout this manual you will frequently see the phrase "notify unit maintenance." When you are instructed to notify unit maintenance, do exactly that; they have the tools and training to efficiently and correctly perform the next level of maintenance.

b. Maintenance procedures are to be performed in the sequence shown in the text and illustrations. Step 1 must be performed before Step 2. Procedure A must be performed before Procedure B, and so on.

c. Equipment illustrations use numbers to identify parts of the system/components.

## HOW TO USE THIS MANUAL - CONTINUED

d. Throughout this manual the words **WARNING**, **CAUTION**, and **NOTE** will appear. There is a reason for every one of them.

**WARNING**

A Warning is used to alert the user to hazardous operating and maintenance procedures, practices, conditions, statements, etc. that may result in injury to or **DEATH** of personnel if not strictly observed.

**CAUTION**

A Caution is used to alert the user to hazardous operating or maintenance procedures, practices, conditions, statements, etc. that may result in damage to or destruction of equipment or of mission effectiveness if not strictly observed.

**NOTE**

A Note is used to inform the user of essential information which is of special interest or importance or will aid the user in performing a job.

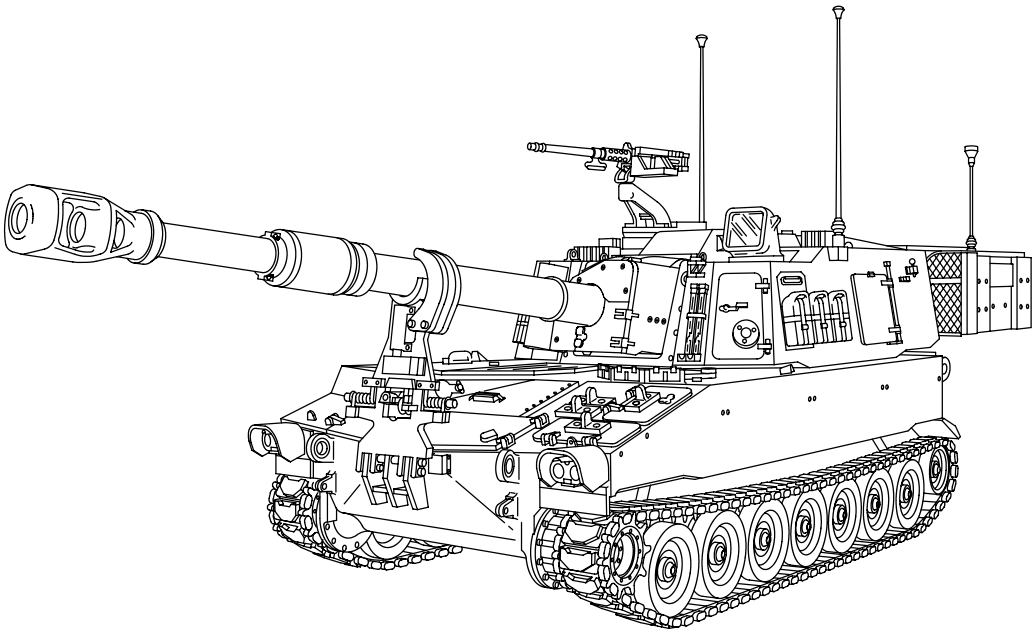

**Left Front View**

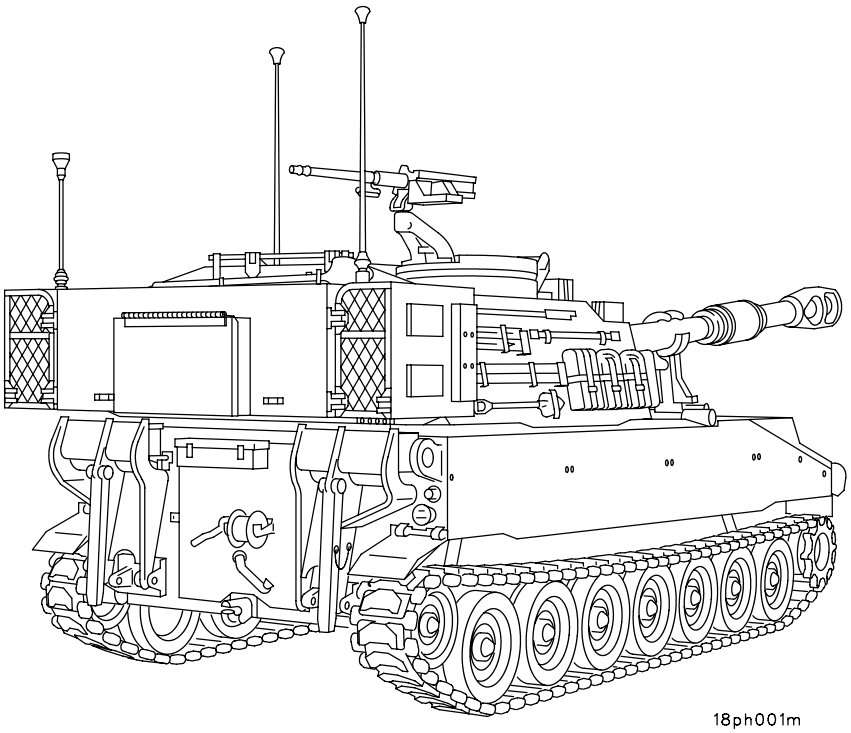


**Right Rear View**

**Howitzer, Medium, Self–Propelled: 155MM, M109A6**

# CHAPTER 1
# INTRODUCTION

## Section I. GENERAL INFORMATION

## 1-1 SCOPE.

a. Type of Manual: Operator's Manual

b. Equipment Name and Model Number: Howitzer, Medium, Self-Propelled: 155MM, M109A6.

c. Purpose of Equipment: To provide artillery fire in support of ground-gaining troops.

d. Special Inclusions: This manual includes a special section on Section Drills.

e. This manual has a companion document with TM number followed by "-HR" (which stands for Hand Receipt). The TM 9-2350-314-10-HR consists of preprinted hand receipts (DA Form 2062) that list end item related equipment (i.e., COEI, BII, and AAL) you must account for. As an aid to property accountability, additional -HR manuals may be requisitioned from the following source in accordance with procedures in DA PAM 25-30:

The US Army Adjutant General Publications Center
2800 Eastern Boulevard
Baltimore, MD 21220-2896

## 1-2 MAINTENANCE FORMS AND PROCEDURES.

Department of the Army forms and procedures used for equipment maintenance will be those prescribed by DA PAM 750-8, The Army Maintenance Management Systems (TAMMS) as contained in Maintenance Management Update.

## 1-3 AMMUNITION.

### 1-3.1 Injury/Damage.

Accidents involving injury to personnel or damage to materiel will be reported in accordance with AR 385-40. Explosives and ammunition malfunctions will be reported in accordance with AR 75-1.

### 1-3.2 Safety, Care, and Handling.

For safety, care and handling of ammunition refer to paragraphs 5-16 and 5-17.

## 1-4 CORROSION PREVENTION AND CONTROL (CPC).

For CPC instructions, refer to Appendix H.

## 1-5 DESTRUCTION OF ARMY MATERIEL TO PREVENT ENEMY USE.

Destruction of the vehicle, armament, and equipment when subject to capture or abandonment in a combat zone, will be undertaken by the using army only when the unit commander decides such action is necessary in accordance with orders of, or policy established by, the Army commander.

Refer to TM 750-244-6 for information on destruction of all mechanical equipment. In general, destruction of essential parts, followed by burning, will usually be sufficient to render the vehicle, armament, and equipment useless. Time is usually critical.

Material must be damaged so that it cannot be restored to usable condition by either repair or cannibalization. If a lack of time or personnel prevents destruction of all parts, give priority to destruction of parts hardest to replace. It is important the same parts be destroyed on all units to prevent construction of a complete unit from several damaged ones.

All items of sighting and fire control instruments and equipment, especially telescopes, gunner's quadrants, and binoculars, are costly and difficult to replace. They should be conserved whenever possible. If you cannot carry them with you, destroy them by smashing with your sledge hammer, pick, or mattock. Throw the pieces in all directions.

When time is short, a method of destroying the equipment with materials at hand is as follows:

a. Retrieve or smash sighting and fire control equipment.

b. Load cannon with projectile and full power charge. Attach a 50-ft (15.2 M) or longer lanyard to firing mechanism. Disconnect all recoil cylinders and fire the weapon.

c. Bend the end of the recoil system rods with a sledge hammer.

A second method is to close the breechblock and toss several thermite grenades down the tube. Elevate the tube so that the grenades will fall against the breechblock. This will melt the breech and the powder chamber, causing them to fuse together.

## 1-6 REPORTING EQUIPMENT IMPROVEMENTS RECOMMENDATIONS (EIRs).

If your howitzer needs improvement, let us know. Send us an EIR. You, the user, are the only one who can tell us what you don't like about your equipment. Let us know why you don't like the design or performance. Put it on an SF 368 (Product Quality Deficiency Report). Mail it to Department of the Army, U.S. Army Tank-automotive and Armaments Command, ATTN: AMSTA-LC-LPIT, TACOM-RI, 1 Rock Island Arsenal, Rock Island, IL 61299-7630. We will send you a reply.

## 1-7 WARRANTY INFORMATION.

The M109A6 is not warranted. Refer to TB 9-2350-314-20-2-3 for warranty information pertaining to the Paladin Digital Fire Control System (PDFCS).

## 1-8 NOMENCLATURE CROSS-REFERENCE LIST.

Nomenclature in this manual was chosen in accordance with the terms used for provisioning. A few tools and cab components are referred to by more common names. In many cases, the more common name is a shorter name for the same component.

| OFFICIAL PROVISIONING NOMENCLATURE | MORE COMMON NAME |
|---|---|
| Ammunition | Ammo |
| Cab ammunition rack | Ammo rack |
| Cab assembly baskets | Stowage baskets |
| Caliber .50 Machine Gun | .50 cal. |
| Computer, Digital (AFCS XXI) | AFCS Computer Unit (ACU) |
| Computer, Digital (PDFCS) | PDFCS Computer Unit (PDCU) |
| Computer, Stabilization Data | Dynamic Reference Unit Hybrid |
| Electrical lead (braided copper wire) | Ground strap |
| Gage assembly | Sight gage |
| Howitzer M182A1 Mount | M182A1 mount |
| Infinity aiming reference collimator M1A1 or M1A2 | M1A1/M1A2 collimator |
| Intercommunications power harness | Intercom power harness |
| M284 cannon assembly | Cannon |
| Machine key | Torque key |
| Nonelectrical wire | Lockwire, safety wire |
| Rod Assembly | Dipstick |
| Radar Chronograph Antenna Mounting bracket | M93 MVS |

## 1-8 NOMENCLATURE CROSS-REFERENCE LIST - CONTINUED

| OFFICIAL PROVISIONING NOMENCLATURE | MORE COMMON NAME |
|---|---|
| Resistor, variable | Rheostat |
| Seat cushion | Backrest |
| Seat, individual | Crew seat |
| Sensor, vehicle | Vehicle Motion Sensor |
| Socket head screw key | Hex key |
| Spindle assembly | Obturator group or bump spindle |
| Telescope mount M145A1 | Mount M145A1 |
| Tube assembly | Cannon tube |
| 155MM medium self-propelled howitzer M109A6 | Howitzer (Modified 155MM) |
| Viewer-infrared | Night viewer |

## 1-9 LIST OF ABBREVIATIONS.

| | |
|---|---|
| AAL | Additional Authorized List |
| ACK | Acknowledge |
| ACTL | Actual |
| ACTL DEFL | Actual Deflection |
| ACU | AFCS Computer Unit |
| ADAM | Area Denial Artillery Munition |
| ADS | Analog to Digital Servo |
| AF or AOF | Azimuth of Fire |
| AFCS | Automatic Fire Control System |
| ALN | Alignment |
| APS | Air Particle Separator |
| ARV | Ammunition Resupply Vehicle |
| ASL | Authorized Stockage List |
| ASP | Ammunition Supply Point |
| ATC | Ammunition Team Chief |
| AVD | Alternate Vehicle Driver |
| AZ TACH | Azimuth Tachometer |
| BCS | Battery Computer System |
| BII | Basic Issue Item |

## 1-9 LIST OF ABBREVIATIONS - CONTINUED

| | |
|---|---|
| BIT | Built-In-Test |
| BITE | Built-In-Test Equipment |
| °C | Degrees Celsius |
| CCW | Counterclockwise |
| CEOI | Communications Electronics Operating Instructions |
| CHG | Charge |
| CLR | Clear |
| CM | Centimeter |
| CMD | Command |
| CMD DEFL | Command Deflection |
| CLGP | Cannon-Launched Guided Projectile |
| COEI | Component of End Item |
| COMSEC | Communications Security |
| COS | Chief of Section |
| CPC | Corrosion Prevention and Control |
| CPCI | Computer Program Configuration Item |
| CS | Center Sector |
| CTA | Common Table of Allowances |
| CW | Clockwise |
| DAP | Distant Aiming Point |
| DAGR | Defense Advanced GPS (Global Positioning System) Receiver ■ |
| DC | Danger Close |
| DCA | Diagnostic Connector Assembly |
| DCU | Display Control Unit |
| DEFL | Deflection |
| DESTN | Destination |
| DGRD | Degraded |
| DPICM | Dual Purpose Improved Conventional Munitions |
| DRU | Dynamic Reference Unit ■ |
| DRUH | Dynamic Reference Unit Hybrid |
| DU | Display Unit |
| EFC | Equivalent Full Charge |
| EIR | Equipment Improvement Recommendation |
| EL Panel | Electroluminescent Panel |
| EL Tach | Elevation Tachometer |
| EMB TNG | Embedded Training |
| EMI/EMC | Electromagnetic Interference/Compatibility |
| EMR | Electromagnetic Radiation |

## 1-9 LIST OF ABBREVIATIONS - CONTINUED

| | |
|---|---|
| ENT | Enter |
| EOD | Explosive Ordnance Disposal |
| EOL | End of Orienting Line |
| EOM | End of Mission |
| EPIAFS | Enhanced Portable Inductive Artillery Fuze Setter |
| ET | Embedded Training |
| °F | Degrees Fahrenheit |
| FDC | Fire Direction Center |
| FES | Fire Extinguishing System |
| FFCS | Full Function Crew Station |
| FPF | Final Protective Fire |
| FPF/PRI | Final Protective Fire/Priority |
| GNR | Gunner |
| GPS | Global Positioning System |
| HD | Howitzer Driver |
| HE | High-Explosive |
| HEAT | High Explosive Anti-Tank |
| HGBV | Hot Gas Bypass Valve |
| HPCOS | High Pressure Cutout Switch |
| HPCV | Head Pressure Control Valve |
| HR | Hand Receipt |
| ICM | Improved Conventional Munitions |
| IFS | Inductive Fuze Setter |
| INP | Input |
| KG | Kilogram |
| KMPH | Kilometers Per Hour |
| L | Liter |
| LCD | Liquid Crystal Display |
| LED | Light Emitting Diode |
| LHR | Low Heat Rejection |
| LPCOS | Low Pressure Cutout Switch |
| LPFS | Lead Particulate Filter System |
| LPRS | Loose Projectile Restraint System |
| LRSO | Local Radiological Safety Officer |
| LRU | Line Replaceable Unit |
| LS | Left Sector |
| M | Meter |
| M | Mils |
| MACS | Modular Artillery Charge System |
| MAPS | Modular Azimuth Positioning System |
| MAX | Maximum |
| MCS | Microclimate Conditioning System |
| MCSRP | MCS Relay Panel |

## 1-9 LIST OF ABBREVIATIONS - CONTINUED

| | |
|---|---|
| MCSVIS | Master Control Station Vehicle Intercom System |
| MHZ | Megahertz |
| MIN | Minimum |
| MOPP | Mission Oriented Protective Posture |
| MOUT | Military Operations in Urban Terrain |
| MOVE ORD | Move Order |
| M/S | Meters Per Second |
| MT | Mechanical Time |
| MTOE | Modified Table of Organization and Equipment |
| MTSQ | Mechanical Time Super Quick |
| MWRH | Mounted Water Ration Heater |
| MVS | Muzzle Velocity Sensor |
| MVV | Muzzle Velocity Variance |
| NAV | Navigation |
| NBC | Nuclear, Biological, Chemical |
| NVM | Non-volatile Memory |
| OL | Orienting Line |
| OS | Orienting Station |
| PANTEL | Panoramic Telescope |
| PCU | Power Conditioner Unit (AFCS) |
| PCU-2 | Power Conditioner Unit-2 (PDFCS) |
| PD | Point Detonating |
| PDI | Prognostic/Diagnostic Interface |
| PDIU | Prognostic/Diagnostic Interface Unit |
| PDCU | Paladin Digital Computer Unit |
| PDFCS | Paladin Digital Fire Control System |
| PDU | PDFCS Display Unit |
| PIA | Platform Interface Adapter |
| PIK | Platform Interface Kit |
| PK | Pack |
| PLGR | Precision Lightweight GPS (Global Positioning System) Receiver |
| PLL | Prescribed Load List |
| PMCS | Preventive Maintenance Checks and Services |
| PMVS | Paladin Muzzle Velocity System |
| POC | Platoon Operation Center |
| POSN | Position |
| PRI | Priority |
| PROP | Propellant |
| PRV | Pressure Relief Valve |
| PSIAD | Paladin Serial Interface Adapter Device |
| PSI | Pounds Per Square Inch |
| PT | Participating |
| PUCT | Power Up Confidence Test |
| QE | Quadrant Elevation or Quadrant Entry |
| RAAM | Remote Anti-Armor Mine |
| RAP | Rocket Assisted Projectile |

## 1-9 LIST OF ABBREVIATIONS - CONTINUED

| | |
|---|---|
| RCVD MSG | Received Message |
| RFI | Radio Frequency Interface |
| RNDS | Rounds |
| RNG | Range |
| RPM | Revolutions Per Minute |
| RS | Right Sector |
| S&A | Safe and Arming |
| SAASM | Selective Availability Anti-Spoofing Module |
| SD | Section Driver |
| SE | Support Equipment |
| SPH | Self-Propelled Howitzer |
| SINCGARS | Single Channel Ground and Airborne Radio System |
| SQ | Super Quick |
| SRU | Shop Replaceable Unit |
| STE | Simplified Test Equipment |
| STE/ICE-R | Simplified Test Equipment for Internal Combustion Engines Reprogrammable |
| TEV | Thermostatic Expansion Valve |
| TOE | Table of Organization and Equipment |
| TOT | Time On Target |
| TR | Training |
| TSOP | Tactical Standard Operating Procedures |
| TTS | Tube Temperature Sensor (Main Gun Tube) |
| UTM | Universal Transverse Mercator |
| VEH PWR | Vehicle Power |
| VEL | Velocity |
| VFPS | Ventilated Face Piece System |
| VLY | Volley |
| VIS | Vehicular Intercommunications System |
| VMS | Vehicle Motion Sensor |
| VMS Modem | Vehicle Motion Sensor Modem |
| VT | Variable Time |
| WARN MSG | Warning Message |
| WC | Weapon Controller |
| WP | White Phosphorus |
| ZUPT | Zero Velocity Update |

## 1-10 GLOSSARY.

| | |
|---|---|
| ALPHANUMERIC | Consisting of alphabetical and numerical symbols in sequence. |
| ANGULAR | Measured by an angle or degree of an arc. |

## 1-10 GLOSSARY - CONTINUED

| | |
|---|---|
| BINARY | Characterized by or composed of two different parts. |
| BOOT DONGLE | A device required for PDFCS to boot without a keyboard. (The boot dongle will be removed in vehicles equipped with PIK.) |
| CELSIUS | A temperature scale that registers the freezing point of water as 0°C and the boiling point as 100°C under normal atmospheric pressure. |
| CENTRIFUGALLY | Moving or directed away from center or axis. |
| CHRONOGRAPH | An instrument that registers or graphically records time intervals such as the duration of an event. |
| COLLIMATION | To make parallel. |
| CURSOR | A manually controlled bright figure on a computer display to indicate a character to be revised or a position where data is to be entered |
| DEGRADED | Considered as below a normal standard. |
| ELECTROLUMINESCENT | The direct conversion of electric energy to light by a solid phosphor subjected to an alternating electric field. |
| FAHRENHEIT | A temperature scale that registers the freezing point of water as 32°F and the boiling point as 212°F under standard atmospheric pressure. |
| HERTZ | A unit of frequency equal to one cycle per second. |
| INITIALIZED | To begin a process or action. |
| INTERFACE | The place at which independent systems meet and act on or communicate with each other. |
| METEOROLOGICAL | The science dealing with the weather conditions. |
| MICROCLIMATE | The climate of a specific place within an area, contrasted with the climate of the area as a whole. |
| MODEM | A device that converts data to a form that can be transferred. |
| MODULAR | Constructed with standardized units or dimensions for flexible use. |
| NONVOLATILE | Not explosive. |
| OBTURATOR | A device for sealing a gun breech to prevent gas from escaping on firing. |
| PARALLAX | The apparent displacement or the difference in apparent direction of an object as seen from different points not on a straight line with the object. |
| PARTICULATES | Formed of separate particles. |

## 1-10 GLOSSARY - CONTINUED

| | |
|---|---|
| PROGNOSTIC | A sign or indication of some future happening. |
| PROPELLANT | Something that propels or provides thrust. |
| SHEAF | A pattern of bursts on a target. |
| SPHEROID | A survey of a particular portion of the earth's surface. |
| SYNCHRONIZATION | To cause to operate with exact coincidence in time and rate. |
| TOXIC | Harmful, destructive or deadly. |
| TRANSIENCE | A temporary oscillation that occurs in circuits because of a sudden change of voltage or load. |
| VISCOSITY | The degree to which fluid resists flow under applied force. |

# Section II. EQUIPMENT DESCRIPTION

## 1-11 EQUIPMENT CHARACTERISTICS, CAPABILITIES, AND FEATURES.

### 1-11.1 Characteristics.

The medium self-propelled howitzer is a full-tracked, armored combat support, internally loaded, air transportable, diesel-powered vehicle with excellent ground mobility. The primary armament includes a 155MM M284 cannon and M182A1 mount, with firing accomplished by an M49 firing mechanism which uses cartridge type primers. The vehicle carries a crew of four: chief of section, gunner, cannoneer, and driver.

### 1-11.2 Capabilities and Features.

- Max Speed 38 MPH (61 KMPH)
- Max Range 186 Miles (299 KM)
- 155MM, M284 Cannon
- M182A1 Mount
- 650 Amp Alternator
- Starter Protection Circuits
- Final Drive Quick-Disconnects
- Independent Torsion Bars
- Remotely Operated Travel Lock
- Microclimate Conditioning System
- Prognostics/Diagnostics Capability (PDIU/PDI/STE/ICE-R)
- On-Board Ballistic Calculation (AFCS/PDFCS)
- On-Board Communications (Digital and Voice)
- Compartmentalized Hydraulic Components
- Desert Cooling
- MAPS (Modular Azimuth Positioning System)
- Lead Particulate Filter and Ventilation System
- Higher Power Transmission
- Low Heat Rejection Engine

# 1-12 LOCATION AND DESCRIPTION OF MAJOR COMPONENTS.

## 1-12.1 Exterior Components

| | | |
|---|---|---|
| 1 | CANNON M284-155MM | Provides main armament for howitzer. |
| 2 | GUN TUBE TRAVEL LOCK | Provides support for gun tube during travel. |
| 3 | REPLENISHER | Allows for change in quantity of oil required by the recoil cylinders and for expansion and contraction of hydraulic fluid due to temperature changes. |
| 4 | CAB LIFTING BRACKETS | Two front lifting brackets and two rear lifting eyes provide connecting points for lifting cab. |
| 5 | BALLISTIC SHIELD | Provides protection for variable recoil and recuperator from small arms fire and shrapnel. |
| 6 | MACHINE GUN .50 CAL | Provides for air and troop defense. Refer to TM 9-1005-213-10 for description. |
| 7 | M140/M140A1 MOUNTING BRACKET | Provides mounting for the M140/M140A1 alignment device during boresighting of the M117A2 Pantel. |
| 8 | BALLISTIC COVER | Protects panoramic telescope (Pantel) against shock during firing and against inclement weather. |
| 9 | ANTENNAS | Two antennas receive and transmit radio signals. |
| 9.1 | DELETED | |
| 10 | CAB SIDE DOOR | Provides emergency exit. |
| 11 | HYDRAULIC COMPARTMENT ACCESS COVER | Permits access to hydraulic compartment. |
| 12 | EXTERNAL FIRE EXTINGUISHER T-HANDLE | Actuates engine compartment fire extinguisher from outside the howitzer. |
| 13 | ROADWHEELS | Seven sets of roadwheels on each side provide support and guides for the track. |
| 14 | HYDRAULIC COMPARTMENT ACCESS DOOR | Permits access to hydraulic compartment. |
| 15 | BATTERY ACCESS DOORS | Two doors provide access to batteries. |
| 16 | DRIVE SPROCKETS | Drive sprockets, two each side, transfer power from the transmission and final drive to track. |
| 17 | TRACK ASSEMBLY | Two track assemblies provide mobility for the vehicle. |
| 18 | TRANSMISSION ACCESS DOORS | Two doors provide access to front of powerpack. |
| 19 | FRONT TOWING EYES | Two front towing eyes provide connection points for towing howitzer. |
| 20 | FRONT LIFTING EYES | Two lifting eyes provide connection points for lifting howitzer. |
| 21 | HEADLIGHTS | Two headlights provide light for night driving and blackout conditions. |

# 1-12 LOCATION AND DESCRIPTION OF MAJOR COMPONENTS - CONTINUED

## 1-12.1 Exterior Components - Continued

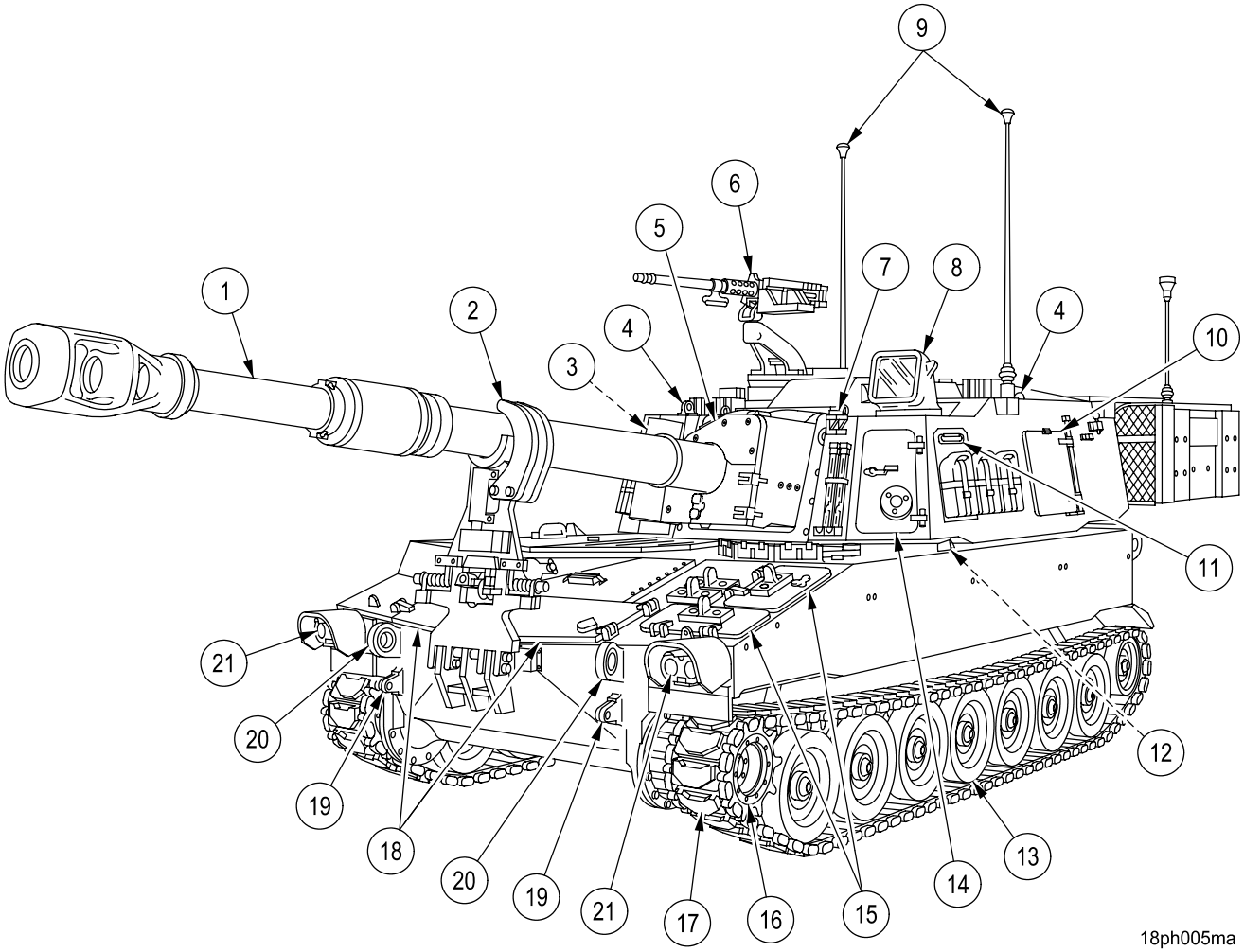


NOTE: Item 9.1 deleted.

# 1-12 LOCATION AND DESCRIPTION OF MAJOR COMPONENTS - CONTINUED

## 1-12.1 Exterior Components - Continued

| | | |
|---|---|---|
| 22 | STOWAGE BASKETS | Two baskets provide stowage for miscellaneous items. |
| 23 | PLGR ANTENNA | The Precision Lightweight GPS (Global Positioning System) Receiver (PLGR) antenna is used to support the Satellite Signals Navigation Set (AN/PSN-11) |
| | OR | |
| | DAGR ANTENNA | The Defense Advanced GPS (Global Positioning System) Receiver antenna is used to support the Satellite Signals Navigation Set (AN/PSN-13). |
| 24 | COMMANDER'S CUPOLA | Provides access to machine gun. Rotates manually 6400 mils. |
| 25 | ENGINE EXHAUST OUTLET | Provides outlet for engine exhaust. |
| 26 | COMMUNICATIONS TERMINALS | Provide connecting points for wire line communications. |
| 27 | REAR LIFTING EYES | Two rear lifting eyes provide connection points for lifting howitzer. |
| 28 | EXTERNAL POWER RECEPTACLE | NATO type power receptacle provides circuitry to receive power from an outside source. |
| 29 | TAILLIGHT/STOPLIGHT | Two taillight units provide rear brake and taillights for night driving under normal and blackout (infrared) conditions. |
| 30 | IDLER WHEELS | Idler wheels, two each side, maintain track tension. |
| 31 | EXTERNAL INTERCOM BOX | Provides communications capabilities outside of howitzer. |
| 32 | CREW COMPARTMENT DOOR | Provides access to and from crew compartment. |
| 33 | TOWING PINTLE | Provides connecting point for towing howitzer. |
| 34 | REAR TOWING EYES | Two rear towing eyes provide connection points for howitzer towing. |
| 35 | GRENADE BOXES | Two boxes provide stowage for grenades. |
| 36 | SPADES | Two spades provide stability when firing off of loose, sandy, or muddy soils. Also used when mated with Ammunition Resupply Vehicle. |
| 37 | ROCKET LAUNCHER BOX | Provides stowage for three AT4 rocket launchers. |

# 1-12 LOCATION AND DESCRIPTION OF MAJOR COMPONENTS - CONTINUED

## 1-12.1 Exterior Components - Continued

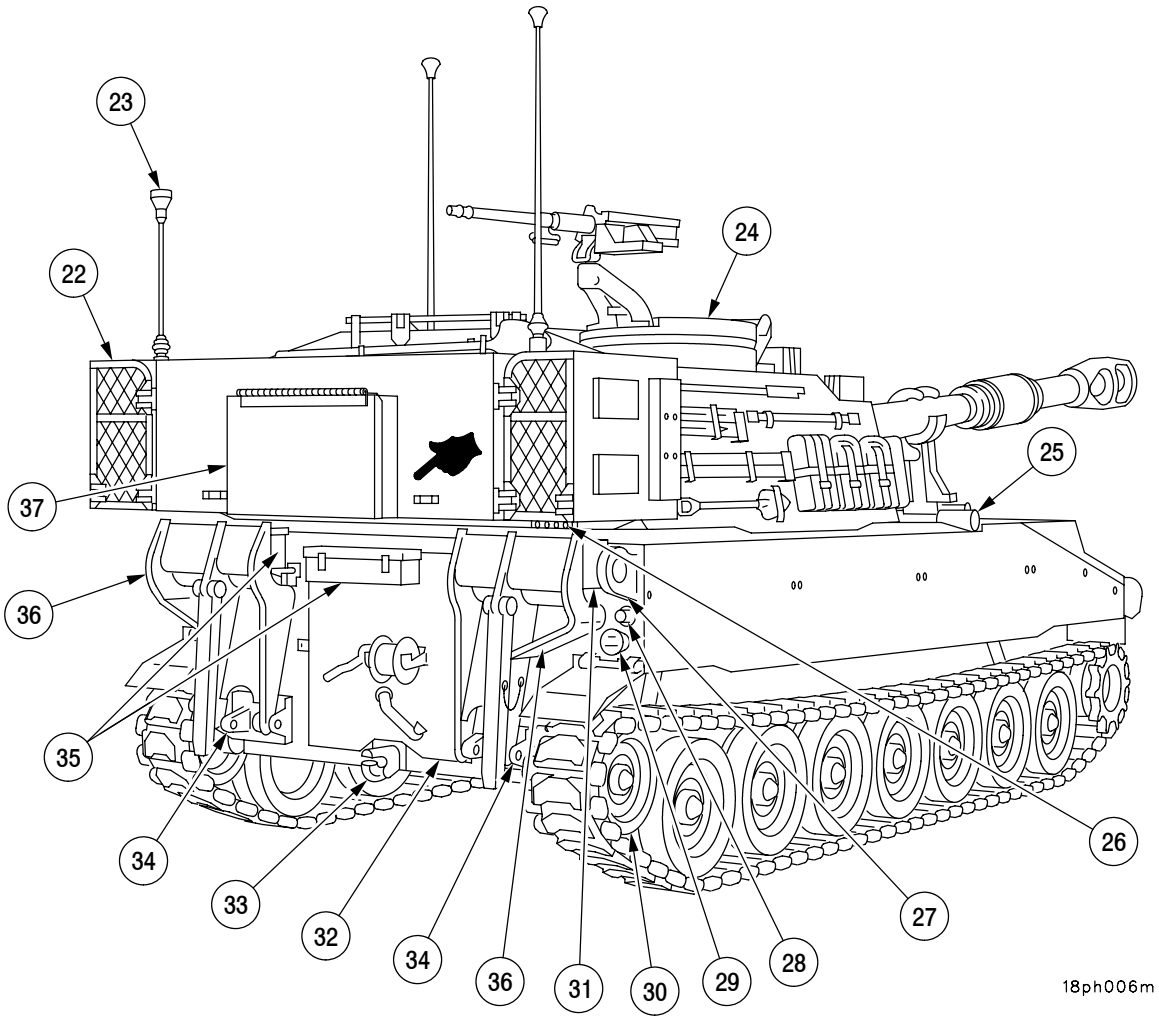

# 1-12 LOCATION AND DESCRIPTION OF MAJOR COMPONENTS - CONTINUED

## 1-12.1 Exterior Components - Continued

| | |
|---|---|
| 38 BILGE PUMP DISCHARGE | Outlet for fluids when bilge pump is operated. |
| 39 RADIATOR FAN ACCESS COVER | Permits access to radiator fans. |
| 40 COOLING AIR EXHAUST GRILLE | Discharge location for engine cooling air. |
| 41 RADIATOR CAP ACCESS COVER | Provides access to engine radiator cap. |
| 42 PERSONNEL HEATER EXHAUST | Outlet for personnel heater exhaust. |
| 43 FUEL FILL ACCESS DOOR | Permits access for filling engine fuel tanks. |
| 44 WEATHER COVER | Protects cannon rotor shield. |
| 45 MICROCLIMATE CONDITIONING SYSTEM | Provides a decontaminated, conditioned air supply for crewmen operating under NBC conditions. (Refer to para 1-12.5 for NBC system components.) |
| 46 GUNNER'S ESCAPE HATCH | Provides access to and from crew compartment. |
| 47 VENTILATION INTAKE/EXHAUST DUCT GRILLE | Permits outside air to lead particulate filter system and exhausts smoke from crew compartment. |
| 48 DRIVER'S HATCH | Provides access to and from driver's compartment. |
| 49 ENGINE AIR INTAKE GRILLE | Permits ventilation and access to engine. |
| 50 ENGINE OIL LEVEL COVER | Provides access for checking engine oil level. |

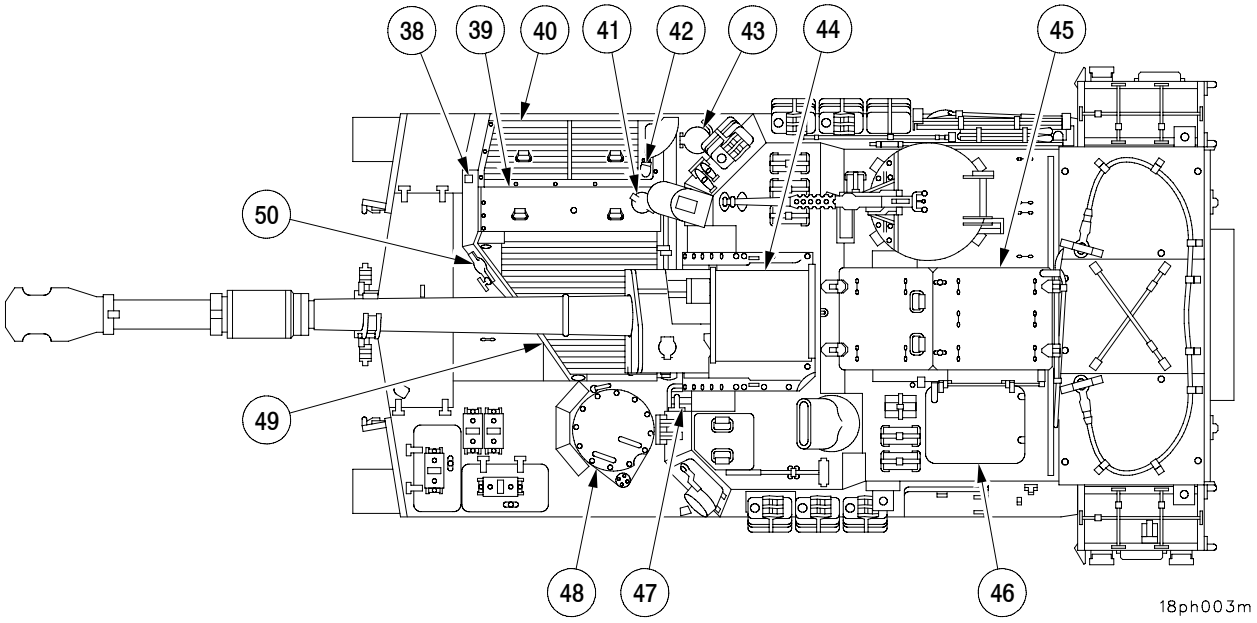

## 1-12 LOCATION AND DESCRIPTION OF MAJOR COMPONENTS - CONTINUED

### 1-12.2 Hull Components.

| | | |
|---|---|---|
| 1 | VEHICLE MOTION SENSOR (VMS) | Provides navigation information to AFCS/PDFCS. |
| 2 | AIR CLEANER | Filters out debris from air entering air induction system. |
| 3 | PERSONNEL HEATER | Provides heat to crew during inclement weather. |
| 4 | FIRE EXTINGUISHER BOTTLES | Supplies fire extinguishing agents to the engine compartment through distribution lines and nozzles. |
| 5 | VENTILATION FAN ASSEMBLY | Exhausts smoke from crew compartment through the intake/exhaust duct grille. |
| 6 | ACCESSORY CONTROL BOX | Controls operation of personnel heater, ventilation fans, and lead filters. |
| 7 | LEAD PARTICULATE FILTER AND VENTILATION SYSTEM | Filters lead from air entering crew compartment through the ventilation system (refer to para 1-12.6 for lead particulate filter system components). |
| 8 | FIXED AND PORTABLE INSTRUMENT PANELS | Control starting and shutdown of engine, lights, and auxiliary systems. |
| 9 | BATTERY | Four batteries provide 24-volt electrical system. |
| 10 | FINAL DRIVE QUICK-DISCONNECT COUPLING | Allows quick removal of final drive coupling for towing and maintenance. |
| 11 | POWERPACK | Includes diesel engine, transfer, transmission, exhaust system, and cooling system. |

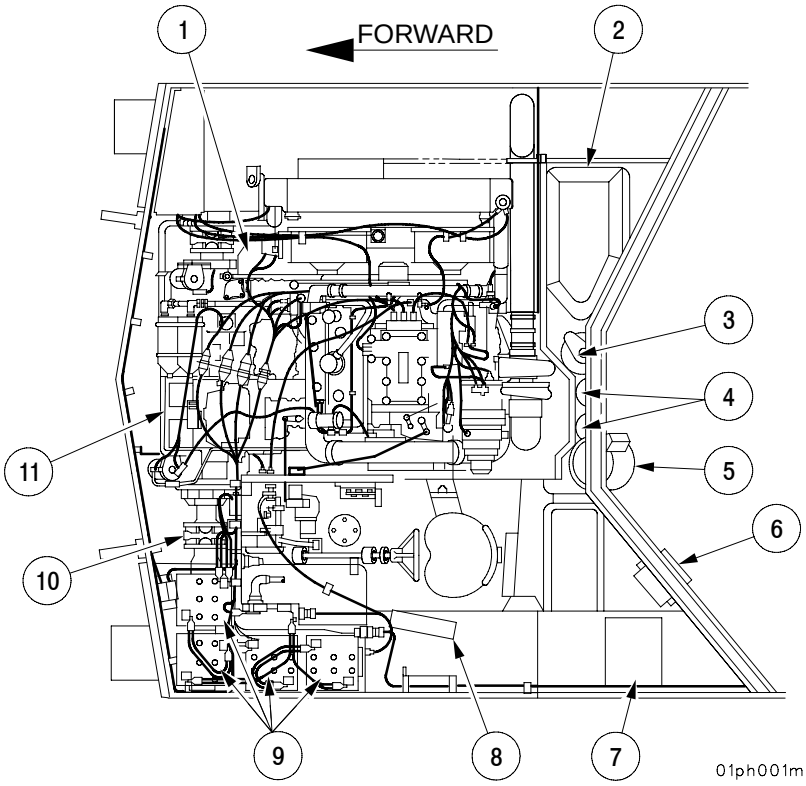

# 1-12 LOCATION AND DESCRIPTION OF MAJOR COMPONENTS - CONTINUED

## 1-12.3 Cab Components.

| | | |
|---|---|---|
| 1 | MOUNTED WATER RATION HEATER | Provides hot water for crew personnel. (Refer to TM 10-7310-241-12&P for operation and maintenance of heater.) |
| 2 | MOUNT M182A1 AND CANNON M284 | Consists of recoil mechanism, mount, gun shield. Pivots in equilibrated elevation on mount trunnions. 155MM cannon with breechblock and firing mechanism. (Refer to para 1-12.7 for cannon and mount components.) |
| 3 | LOADER RAMMER | For loading and ramming projectiles into gun tube. (Refer to para 1-12.8 for loader rammer components.) |
| 4 | EQUILIBRATED ELEVATING CYLINDER | Provides hydraulic balance to offset the weight of the cannon and provides for elevation of the cannon. |
| 5 | COMMANDER'S SEAT | Provides a place for the commander to sit. |
| 6 | BUSTLE RACK | Provides stowage for 44 propelling charge canisters and six fuzed projectiles. |
| 7 | CREW SEATS | Two seats provide a place for the crew to sit. |
| 8 | TRAVERSING MECHANISM | Provides full 6400 mil traversing capability with either power or manual system. |
| 9 | HYDRAULIC POWERPACK | Provides hydraulic power to operate traverse, elevation, and rammer. (Refer to para 1-12.9 for hydraulic system components.) |

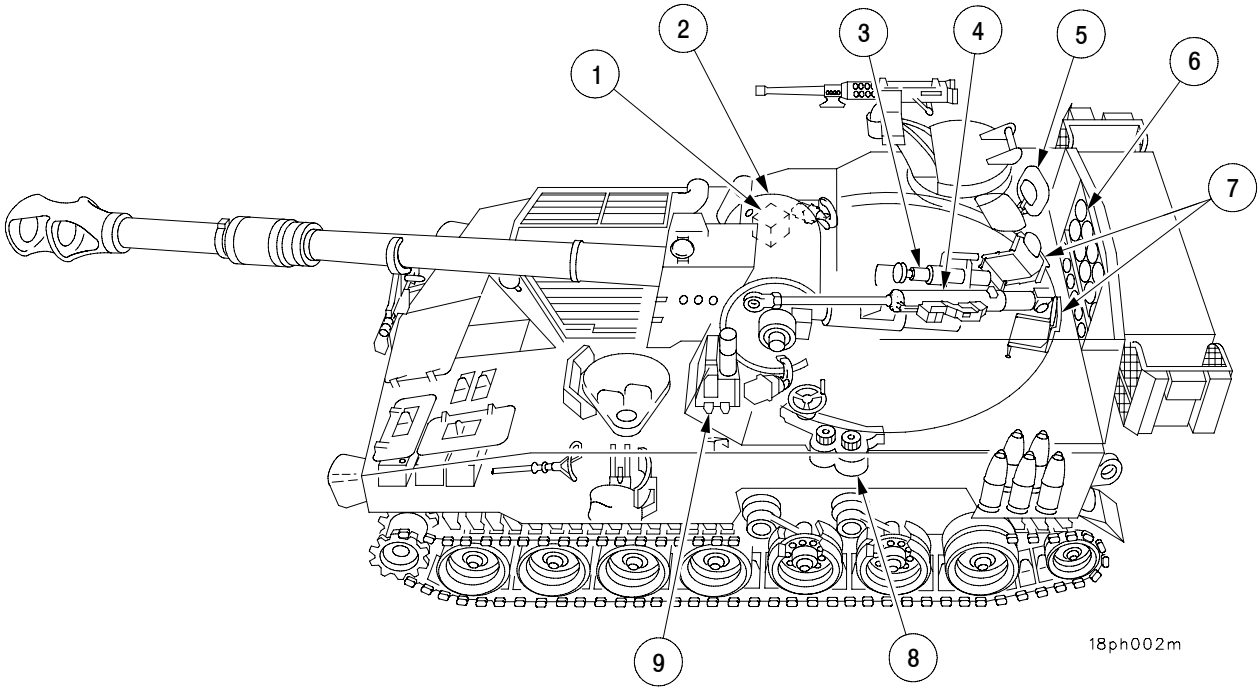

## 1-12 LOCATION AND DESCRIPTION OF MAJOR COMPONENTS - CONTINUED

### 1-12.4 AFCS, PDIU, and Cab Navigation System.

| | | |
|---|---|---|
| 1 | AFCS COMPUTER UNIT (ACU) | Performs ballistic computations and weapon control, provides the interface between the AFCS computer and the radios, and stores data which is displayed/entered on DU. |
| 2 | PLGR | The Precision Lightweight GPS (Global Positioning System) Receiver is a space-based navigation and timing system. The AN/PSN-11 provides highly accurate, continuous, all weather, 3-dimensional (3D) position, velocity, and time. To better understand operating the equipment and for maintenance refer to TM 11-5825-291-13. |
| | OR | |
| | DAGR | The Defense Advanced GPS (Global Positioning System) Receiver replaces PLGR in PDFCS equipped vehicles. The DAGR enhanced features include anti-jam performance, map functionality, enhanced targeting and Selective Availability Anti-Spoofing Module (SAASM) chipset technology. To better understand operating the equipment and for maintenance, refer to TM 11-5820-1172-13. |
| 3 | DISPLAY UNIT (DU) | Functions as primary operator interface and system control mechanism. |
| 4 | PROGNOSTIC/DIAGNOSTIC INTERFACE UNIT (PDIU) | Aids in prediction and determination of equipment failure. |
| 5 | BACK-UP BATTERY BOXES | Two back-up batteries provide electrical power to support AFCS during power dropout or when vehicle input falls below 20 volts. |
| 6 | POWER CONDITIONER UNIT (PCU) | The PCU is an electrical support system for the AFCS. |
| 7 | ELEVATION TACHOMETER | Provides elevation position information to the AFCS. |
| 8 | AZIMUTH TACHOMETER | Provides azimuth position information on cannon to the AFCS. |
| 9 | DYNAMIC REFERENCE UNIT HYBRID (DRUH) | Provides navigation information to the AFCS. |
| 10 | VMS MODEMS | Transmit electronic signals/data from vehicle motion sensor (VMS) by way of hull VMS modem. |

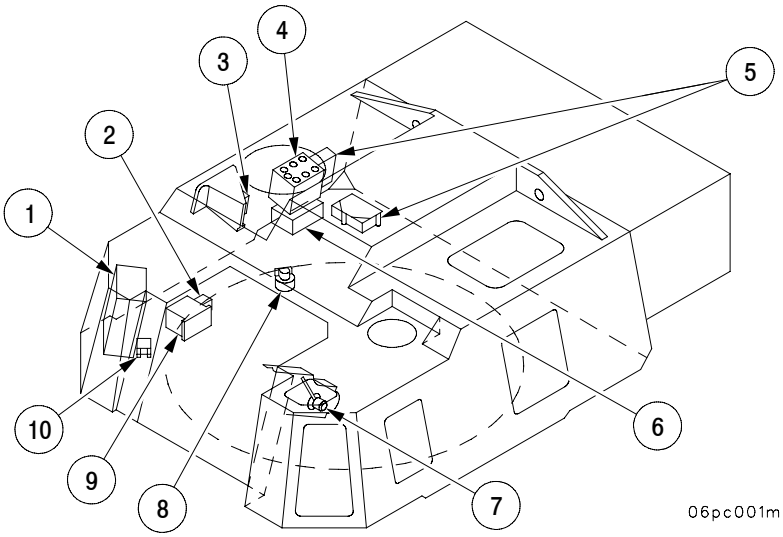

## 1-12 LOCATION AND DESCRIPTION OF MAJOR COMPONENTS - CONTINUED

### 1-12.4.1 PDFCS, and Cab Navigation System.

| | | |
|---|---|---|
| 1 | PALADIN DIGITAL COMPUTER UNIT (PDCU) | Performs ballistic computations and weapon control, provides the interface between the PDFCS computer and the radios, and stores data which is displayed on the PDU when entered on the keypad. |
| 2 | DELETED | |
| 3 | DEFENSE ADVANCED GPS RECEIVER (DAGR) | The Defense Advanced GPS (Global Positioning System) receiver replaces PLGR in PDFCS equipped vehicles. The DAGR enhanced features include anti-jam performance, map functionality, enhanced targeting and Selective Availability Anti-Spoofing Module chipset technology. To better understand operating the equipment and for maintenance, refer to TM 11-5820-1172-13. |
| 4 | PDFCS DISPLAY UNIT (PDU) | Functions as operator interface. |
| 5 | PDFCS KEYPAD | Used specifically for the PDFCS, contains sealed membrane KEYPAD buttons with switch guards protecting power, training, and gun on/off switches. |
| 6 | DELETED | |
| 7 | BACK-UP BATTERY BOXES | Two back-up batteries provide electrical power to support PDFCS during power dropout or when vehicle input falls below 20 volts. |
| 8 | POWER CONDITIONER UNIT - 2 | The PCU-2 is an electrical support system for the PDFCS. |
| 9 | ELEVATION TACHOMETER | The Elevation Tachometer is not used with the PDFCS and has been removed, and replaced with a shorting plug. |
| 10 | AZIMUTH TACHOMETER | The Azimuth Tachometer is not used with the PDFCS and has been removed, and replaced with a shorting plug. |
| 11 | DYNAMIC REFERENCE UNIT HYBRID (DRUH) | Provides navigation information to the PDFCS. |

## 1-12 LOCATION AND DESCRIPTION OF MAJOR COMPONENTS - CONTINUED

| | |
|---|---|
| 12 VMS MODEMS | Transmit electronic signals/data from vehicle motion sensor (VMS) by way of hull VMS modem. |
| 13 PALADIN SERIAL INTERFACE ADAPTER DEVICE (PSAID) | Provides for the INC and MVS to interface with the PDCU. |
| 14 BOOT DONGLE | The boot dongle will be removed in vehicles with PIK installation. |
| 15 PLATFORM INTERFACE KIT (PIK) | Formats and sends fuze data to EPIAFS. |
| 16 PIK ADAPTER (PIA) | Allows PIK to communicate to necessary equipment in vehicles. |
| 17 ENHANCED PORTABLE INDUCTIVE ARTILLERY FUZE SETTER (EPIAFS) | Interfaces with standard fuzes and XM982. |

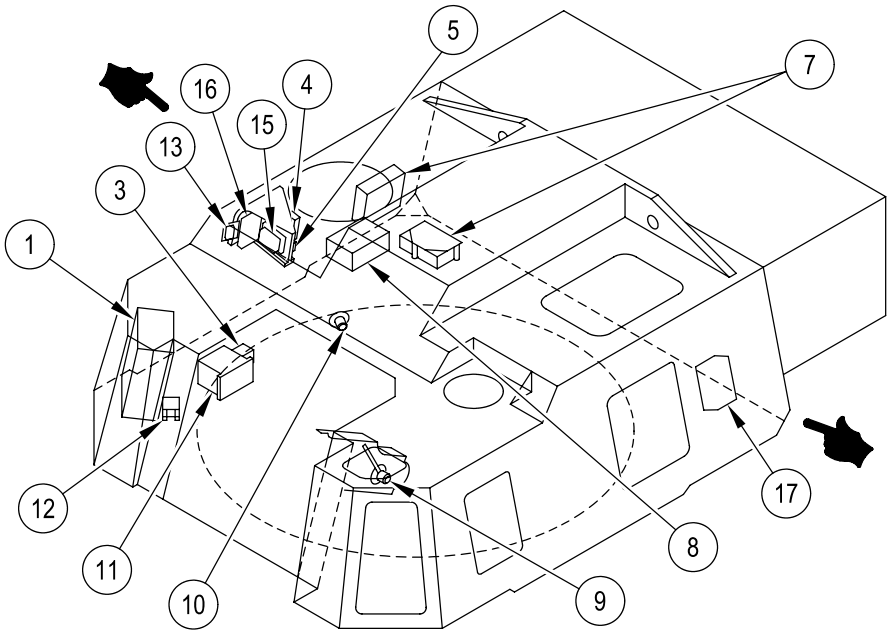


NOTE: Items 2 and 6 deleted.

06pc001mc

# 1-12 LOCATION AND DESCRIPTION OF MAJOR COMPONENTS - CONTINUED

## 1-12.5 NBC System Components.

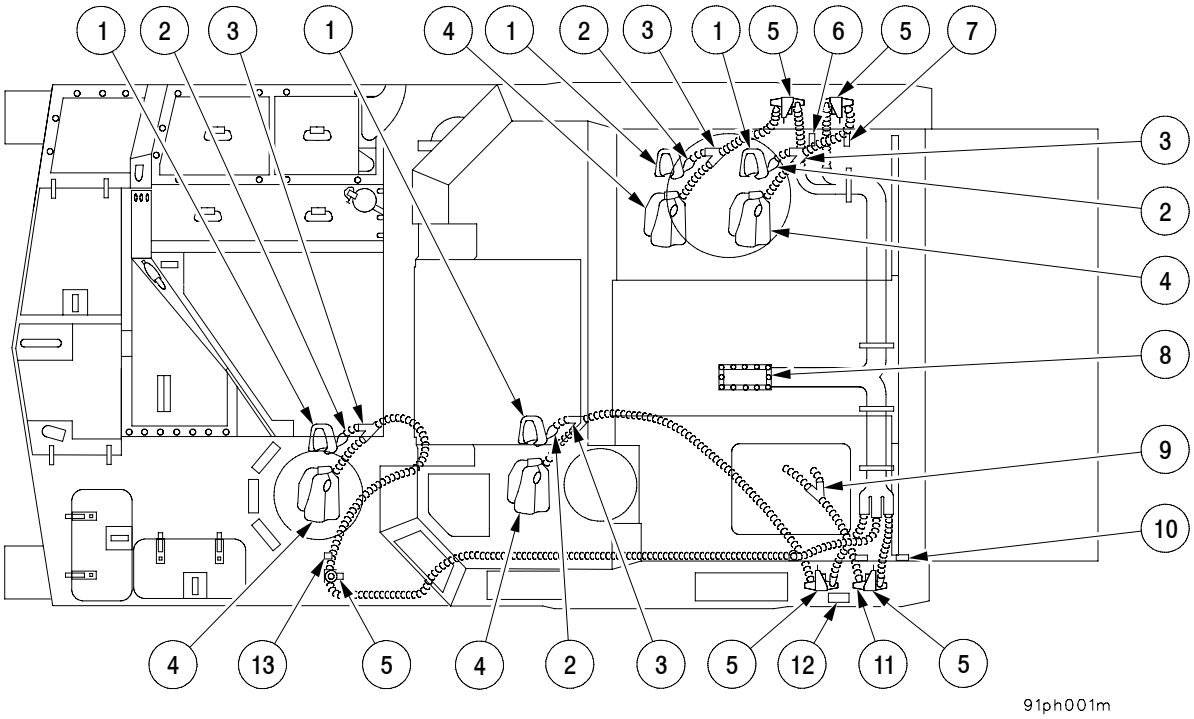


1. M25A1 Protective Mask
2. M10A1 CB Filter
3. Diverter Valve
4. MOPP Suit Vest
5. Heaters (M-3)
6. COS Quick-Disconnect Orifice
7. Gunner's Quick-Disconnect Orifice
8. MCS Pack Assembly Vent
9. Secondary Diverter Valve
10. Driver's Secondary Quick-Disconnect Orifice
11. Cannoneer Quick-Disconnect Orifice
12. MCS Control Box
13. Driver's Primary Quick-Disconnect Orifice

# 1-12 LOCATION AND DESCRIPTION OF MAJOR COMPONENTS - CONTINUED

## 1-12.6 Lead Particulate Filter and Ventilation System Components.

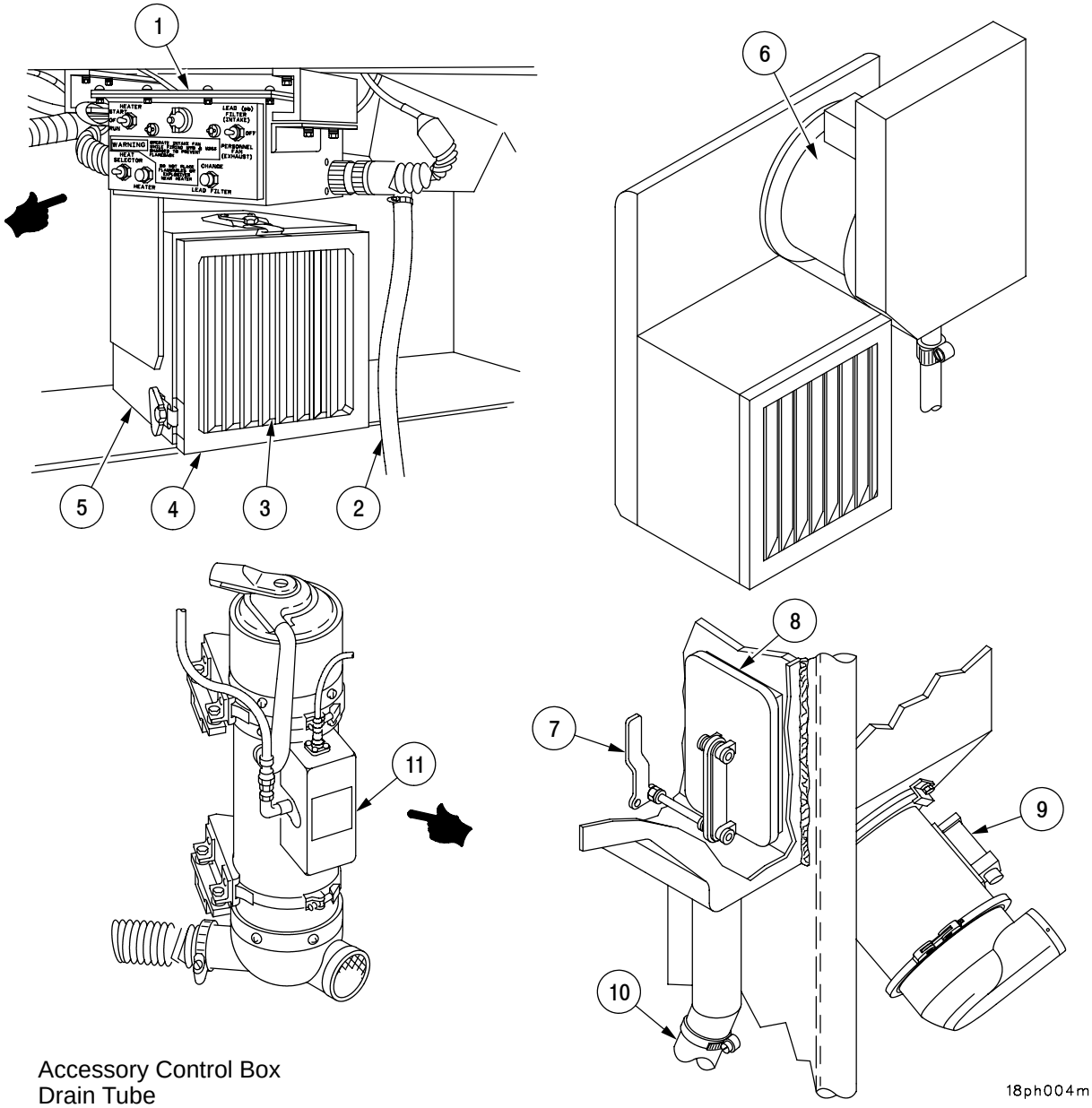


1. Accessory Control Box
2. Drain Tube
3. Lead Filter (Particulate)
4. Filter Housing Grille
5. Filter Housing
6. Vaneaxial Fan Assembly (Intake)
7. Ventilation Duct Control Handle
8. Ventilation Duct Door
9. Personnel Fan (Exhaust)
10. Ventilation Tube
11. Personnel Heater

# 1-12 LOCATION AND DESCRIPTION OF MAJOR COMPONENTS - CONTINUED

## 1-12.7 Cannon and Mount Components.

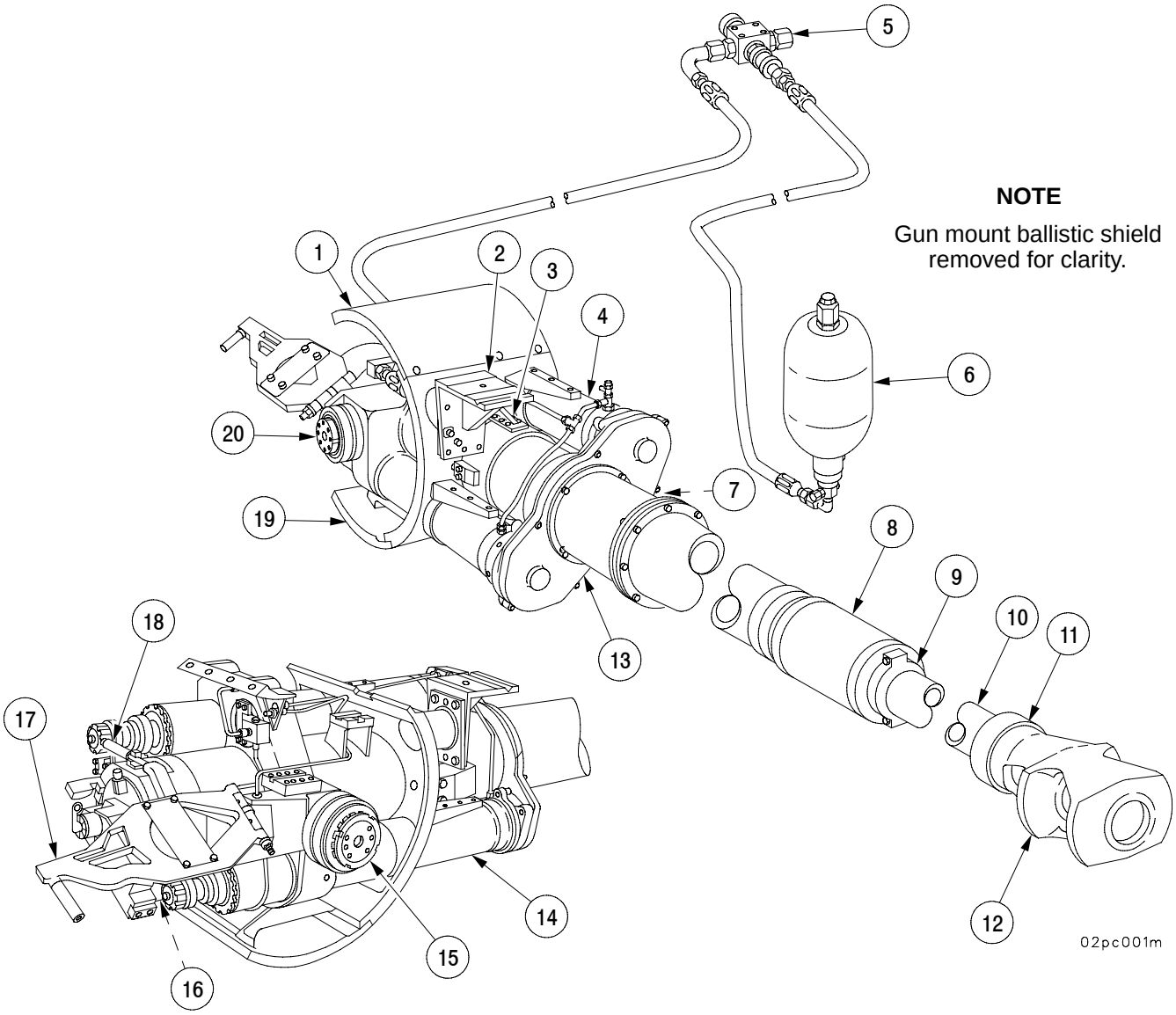


1. Upper Rotor Shield
2. M93 MVS Antenna Mounting Bracket
3. Torque Key
4. Upper Variable Recoil Cylinder
5. Manifold
6. Accumulator
7. Recuperator (Hidden)
8. Bore Evacuator Assembly
9. Bore Evacuator Assembly Thrust Collar
10. Howitzer Cannon M284
11. Muzzle Brake Thrust Collar
12. Muzzle Brake
13. Dust Shield
14. Lower Variable Recoil Cylinder
15. Trunnion
16. Buffer (Hidden)
17. Breech Operating Cradle Cam
18. Breech Operating Handle
19. Lower Rotor Shield
20. Howitzer Mount M182A1

# 1-12 LOCATION AND DESCRIPTION OF MAJOR COMPONENTS - CONTINUED

## 1-12.8 Loader Rammer Components.

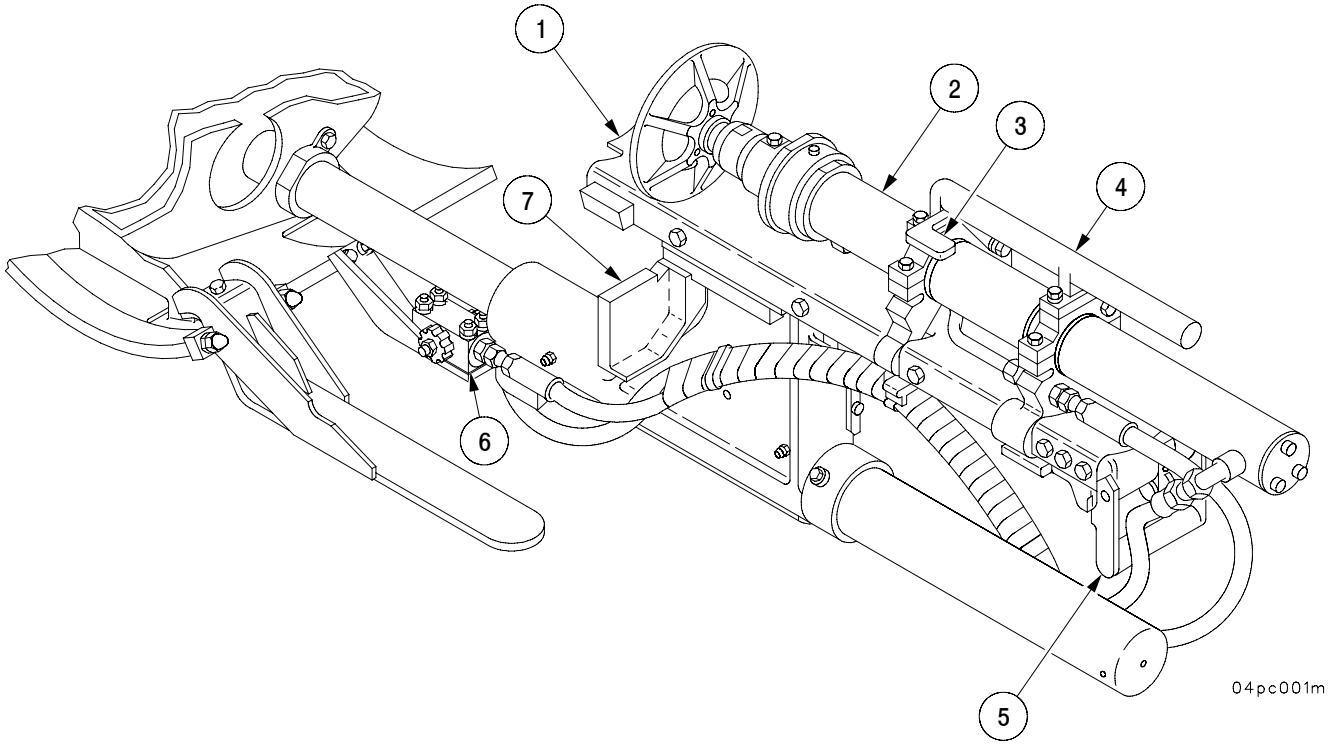


1. Tray
2. Rammer Cylinder
3. Cylinder Latch
4. Cylinder Handle
5. Main Release Handle
6. Blocking Valve
7. Rammer Stop

# 1-12 LOCATION AND DESCRIPTION OF MAJOR COMPONENTS - CONTINUED

## 1-12.9 Hydraulic System Components.

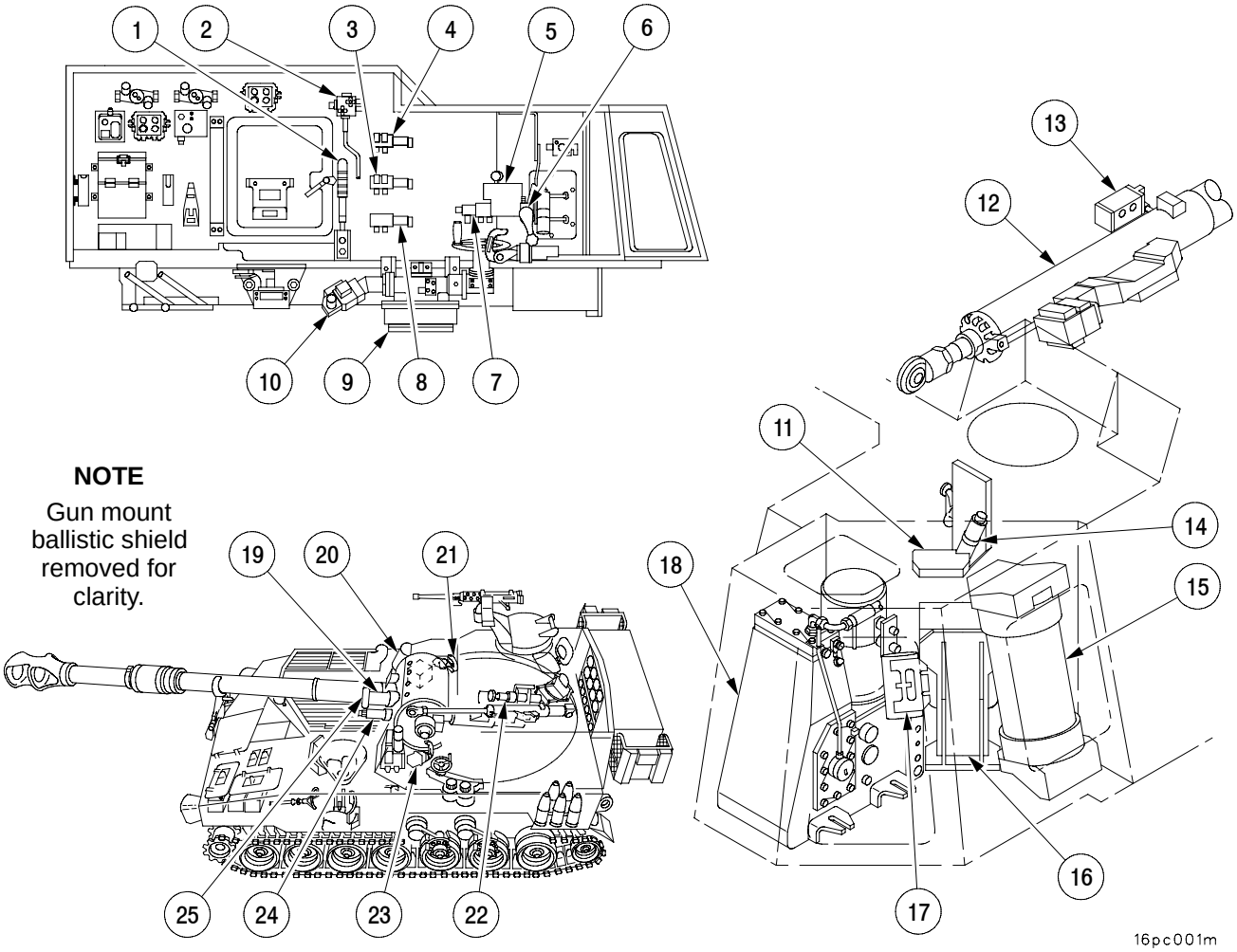


1. Equilibration Hand Pump
2. Equilibration Manifold
3. Traverse Selector Valve
4. Elevation Selector Valve
5. Fuze Manifold
6. Manual Elevation Hand Pump/Accumulator
7. Hydraulic Clutch Valve
8. Traverse Limit Valve
9. Traverse Mechanism Assembly With Motor
10. Traverse Servovalve
11. Mode Selector Valve
12. Elevation Mechanism
13. Loader Rammer Control Valve
14. Accumulator Assembly Manual Pump
15. Elevation Equilibration Accumulator
16. Hydraulic Fluid Filter Assembly
17. Pulse Accumulator
18. Hydraulic Powerpack
19. Buffer Assembly
20. Replenisher Accumulator
21. COS Control Handle
22. Loader Rammer
23. Gunner's Control Handle
24. Recuperator
25. Variable Recoil Cylinders

## 1-13 DIFFERENCES BETWEEN MODELS.

This manual covers only one model, the M109A6.

## 1-14 EQUIPMENT DATA.

a. General: Weights and Dimensions.

Weight:

| | |
|---|---|
| Empty (approx.) | 56,400 lbs (25,605.6 Kg) |
| Combat loaded (approx.) | 63,615 lbs (28,881.21 Kg) |

Dimensions:

| | |
|---|---|
| Overall length (with baskets to rear) | 423 in. (10.7 M) |
| Overall length (with baskets foward) | 392 in. (9.9 M) |
| Overall width (with baskets foward) | 154 in. (3.9 M) |
| Overall width (with baskets to rear) | 128 in. (3.3 M) |
| Overall height (including machine gun) | 143.1 in. (3.63 M) |
| Ground clearance | 18 in. (0.45 M) |

Capacities:

| | |
|---|---|
| Fuel tanks (diesel) | 133 gal. (503.4 L) |
| Engine crankcase | 9-1/2 gal. dry (36 L) |
| | 6-3/4 gal. (refill) (25.5 L) |
| Transmission .. | 20 gal. dry (75.7 L) |
| | 12 gal. (refill) (45.5 L) |
| Cooling system | 20-1/4 gal. dry (77 L) |
| | 14-1/2 gal. (refill) (55 L) |

b. Performance.

| | |
|---|---|
| Maximum speed | 38 mph (61.1 Kmph) |
| Maximum speed, reverse | 7 mph (11.3 Kmph) |
| Cruising range | 186 miles (299 Km) |
| Grade ascending ability (max) | 60% |
| Grade descending ability (max) | 60% |
| Maximum trench crossing width | 72 in. (1.83 M) |
| Maximum vertical wall | 21 in. (0.53 M) |
| Minimum turning radius | 1 vehicle length |
| Fording depth | 42 in. (1.07 M) |

## 1-14 EQUIPMENT DATA - CONTINUED

c. Primary Armament: l55MM, M284 Cannon.

| | |
|---|---|
| Tube length | 20 ft. (6 M) |
| Cannon mount | M182A1 |
| EFC Value | (Zone 8) 0.25 (M119A1)<br>(Zone 5) 1.00 (M232/M232A1)<br>(Zone 4) 0.25 (M232/M232A1)<br>(Zone 3) 0.10 (M232/M232A1)<br>(Zone 7R) 0.25 (M119A2)<br>(Zone 7W) 0.15 (M4A2)<br>(Zone 3 - 6) 0.05 (M4A2 and M3A1)<br>(Zone 2) 0.15 (M231)<br>(Zone 1) 0.05 (M231) |
| Maximum range | (Zone 7) 18,000 M<br>(Zone 5) 22,000 M (M232)<br>(Zone 8) 22,000 M<br>(Zone 8 with RAP) 30,000 M<br>(Zone 5 with RAP) 30,000 M (M232) |
| Maximum rate of fire | 4 rds/min for 3 min |
| Sustained rate of fire | (Zones 3-7) 1 rd/min<br>(Zone 8) 1 rd/min until limited by tube temperature sensor |
| Maximum on-board stored projectiles | 37 regular, 2 M712 (39 total) |
| Maximum on-board propelling charges | 44 |
| Maximum on-board propelling charge canisters (MACS) | 31 |

# Section III. PRINCIPLES OF OPERATION

## 1-15 POWERPACK.

1 Engine - is a liquid cooled, 2-stroke cycle, low heat rejection, diesel-type Model 8V71T, equipped with exhaust-driven turbocharger. The engine develops 440 horsepower at 2300 rpm and delivers power to the transfer assembly (2).

2 Transfer assembly - receives power from the engine (1) and transfers that power to the transmission (3).

3 Transmission - oil cooled and mechanically and hydraulically operated, it receives power from the engine through a geared power transfer assembly (2). The transmission has seven gears - four forward, one neutral, and two reverse gears - and delivers power to the left and right drive sprockets through the output shaft, universal joints, and final drive assemblies. It also functions as the steering and braking mechanism.

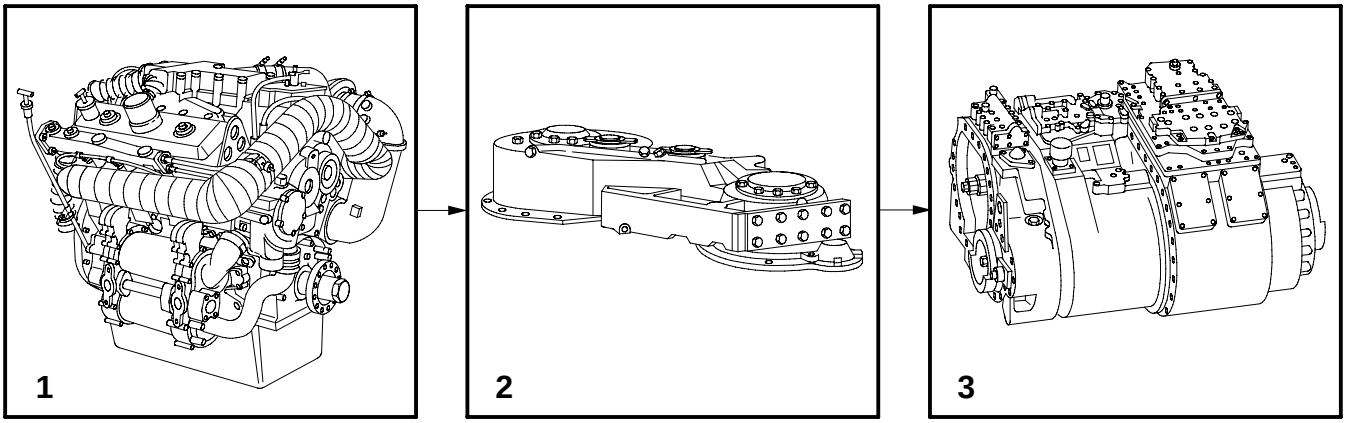


01ph002m

## 1-16 FUEL SYSTEM.

1 Upper fuel tank – provides additional fuel to the lower fuel tank (2). Filling of both fuel tanks takes place through the filler neck of the upper fuel tank.

2 Lower fuel tank – provides for fuel storage and for the return of unused fuel from the fuel return system (10).

3 Electric fuel pumps– activated by the MASTER switch on the instrument panel, and the fuel pump system pressure switch on the engine. These pumps distribute fuel from the lower fuel tank (2) to the fuel distribution center (4).

4 Fuel distribution center – distributes fuel to primary fuel filter (5).

5 Primary fuel filter – first filter from fuel tank.

6 Engine driven fuel pump – when engine is operating, pumps fuel from the primary fuel filter (5) on to the secondary fuel filter (8).

7 Electrically driven fuel pump – when engine is not operating, the electrically driven fuel pump, activated by the fuel prime switch on the instrument panel, pumps fuel from the primary filter (5) to the secondary filter (8).

8 Secondary fuel filter – Filters fuel a second time.

9 Engine – uses fuel.

10 Fuel return system – distributes excess fuel back to the lower fuel tank (2).

## 1-16 FUEL SYSTEM - CONTINUED

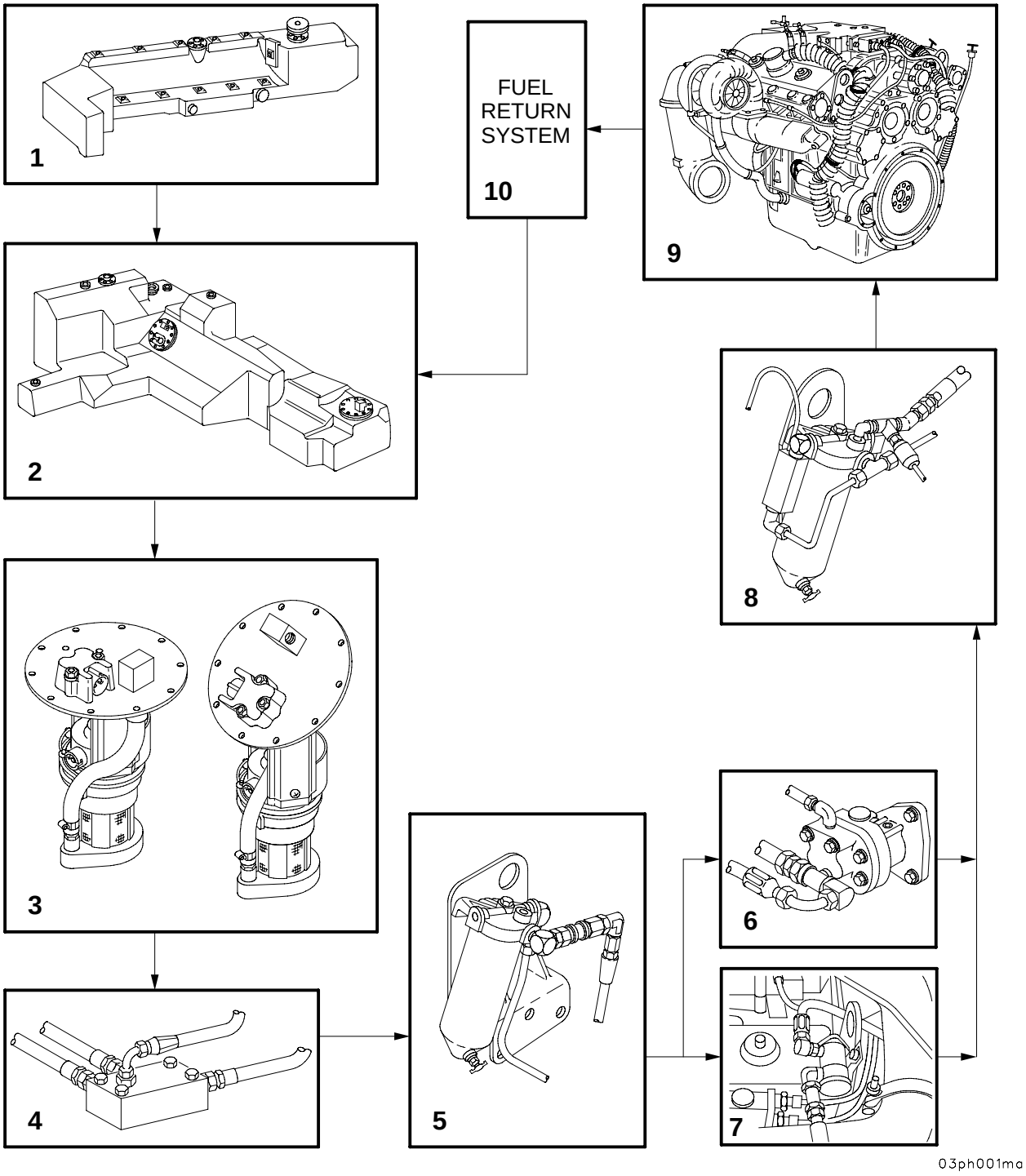

## 1-17 COOLING SYSTEM.

1 Radiator – cools the coolant flowing through it. Coolant is then directed to surge tank (2) or bypass thermostat (6).

2 Surge tank – allows for overflow from the radiator (1) in this closed cooling system.

3 Engine driven coolant pump – pulls coolant from the radiator (1) and distributes it to the transmission and engine oil coolers and back to the radiator (1) or surge tank (2).

4 Engine and transmission oil coolers – cool the oil within the engine and transmission by surrounding the oil coolers with coolant.

5 Inlet thermostat – directs the flow of the coolant from the engine to different areas of the cooling system. If the engine is running hot enough to open the inlet thermostat, the coolant flow will be directed to the radiator (1) so it can be cooled. If the engine is running cool enough, the inlet thermostat will direct flow to the bypass thermostat (6) or surge tank (2).

6 Bypass thermostat – allows inflow from the inlet thermostat (5) and cooling crossover tube and directs it back to the engine driven coolant pump (3).

7 Air intake grille – allows air to be pulled into the engine compartment by the radiator fans (8).

8 Radiator fan assembly – pulls in air through the air intake grille (7), across the engine and pushes the air through the radiator (1) “honeycomb.” The air is then discharged through the exhaust grille (9).

9 Exhaust grille– allows air circulated by the fan assembly (8) to pass through the radiator (1) and back out of the engine compartment.

## 1-17 COOLING SYSTEM - CONTINUED

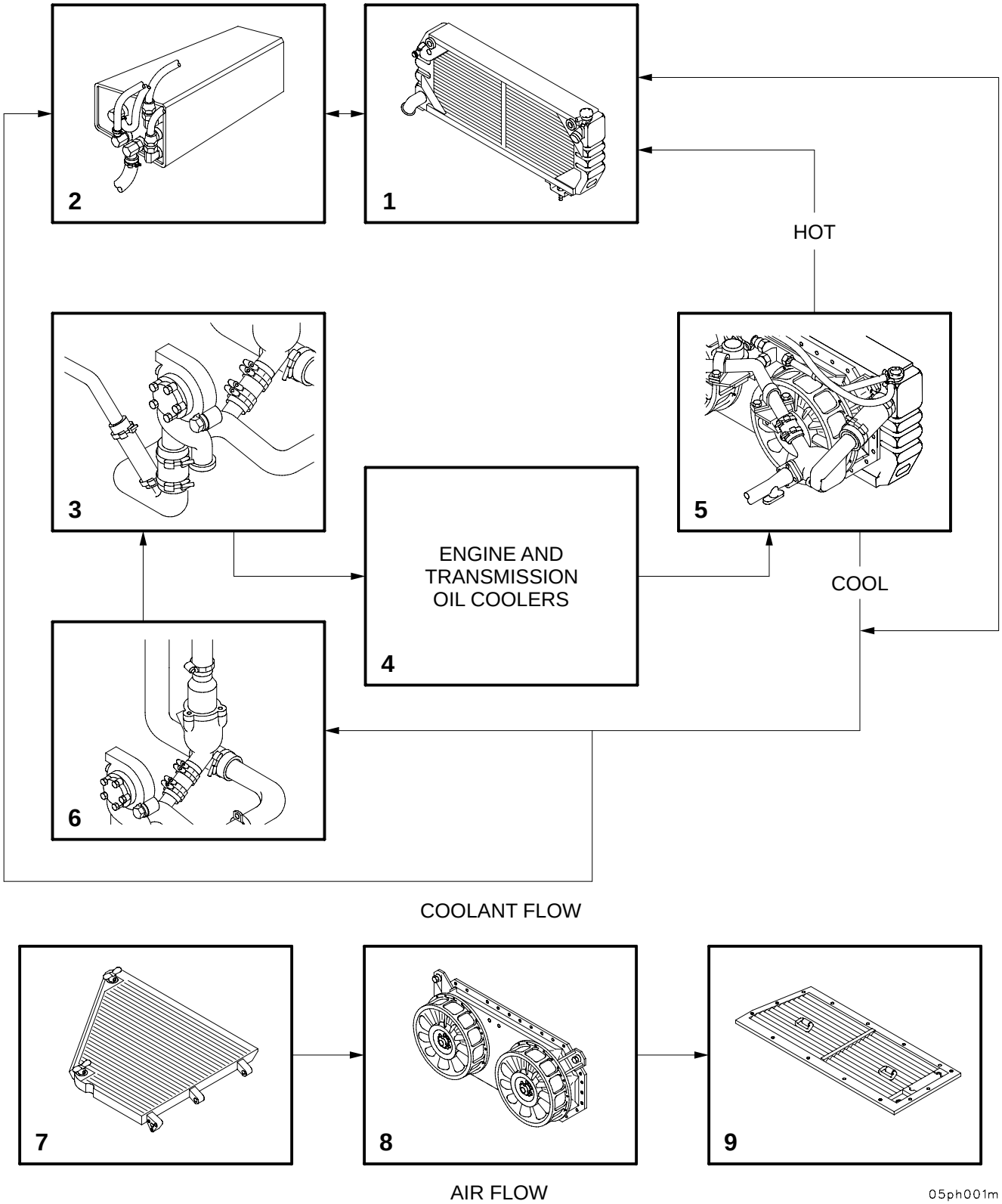

## 1-18 ELECTRICAL SYSTEM.

1 Batteries – four 12-volt batteries connected in series and parallel; delivering 24 V dc (nominal) to vehicle systems.

2 Master relay – delivers electrical power (24 V dc) to operating systems when the master switch (3) is on. Delivers power directly to the:

Slip ring contact board
Engine starter (9)
Circuit breaker board (10)
Cab (slip ring segment board)

3 Master switch – when activated, draws 24 V dc from the battery through the master relay (2) to the electrical systems. With the master switch ON, systems can be operated without running the engine.

4 Generator – belt driven and delivers 24 V dc (nominal) to the voltage regulator (5).

5 Voltage regulator – controls the delivery of 24 V dc to the vehicle operating systems through the master relay (2) and also acts as a recharger for the batteries when the engine is operating.

6 Voltage regulator control box – circuit breaker restores power to voltage regulator with engine running and circuit breaker in the ON position. Light is lit when regulator is inoperable.

7 Slave start – allows jump starting from other vehicles.

8 External power – allows operation using auxiliary power from external source.

9 Starter – is activated by a switch with power drawn from the batteries (1) for starting the engine.

10 Circuit breakers – ten circuit breakers prevent the flow of electric current in an overloaded or otherwise abnormally stressed electric circuit.

## 1-18 ELECTRICAL SYSTEM - CONTINUED

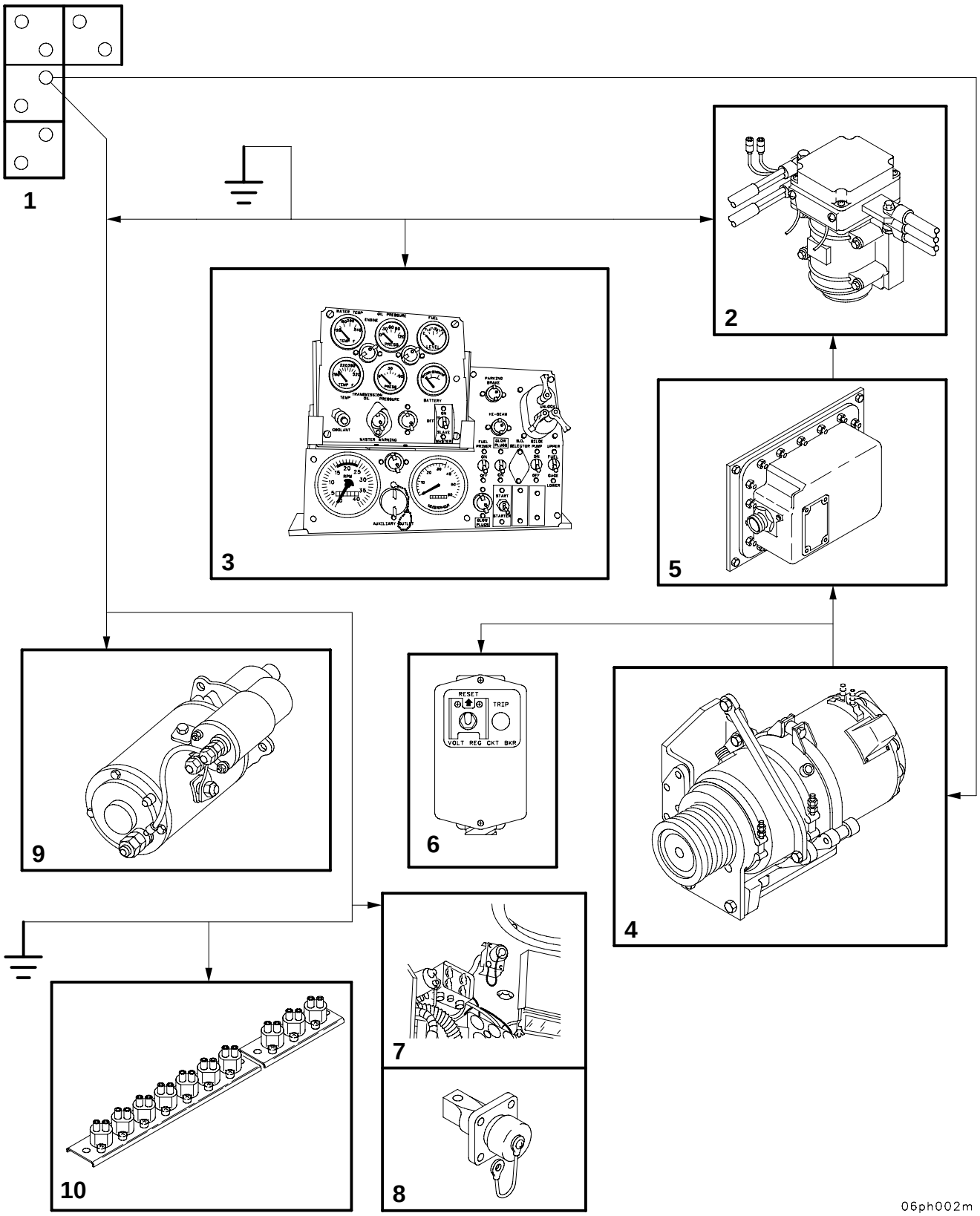

## 1-19 SUSPENSION SYSTEM.

1 Torsion bar anchors - secure the ends of the torsion bars (2). One anchor secures one torsion bar.

2 Torsion bars - secured at the anchor (1) and connected to the roadwheel arm (3), the torsion bar acts as a spring for the roadwheel.

3 Hydraulic bump stops - keep shock absorbers (4) from moving beyond their limits.

4 Shock absorbers - handle differences in the terrain on which the vehicle operates. They are located in the front and back of the vehicle (roadwheels 1 and 7).

5 Roadwheels - seven sets per side, located between the drive sprocket and idler wheel, providing support and guiding the track.

6 Roadwheel arm - connected to the torsion bar (2), the roadwheel arm provides a pivot point between the torsion bar (2) and the roadwheels (5).

7 Track adjuster - increase or decrease track tension.

8 Idler arm assembly - the idler arm assembly consists of an idler arm with an idler wheel attached, all rotating within the idler arm housing. The angle of the idler arm and wheel is determined by the length of track adjuster (7).

## 1-19 SUSPENSION SYSTEM - CONTINUED

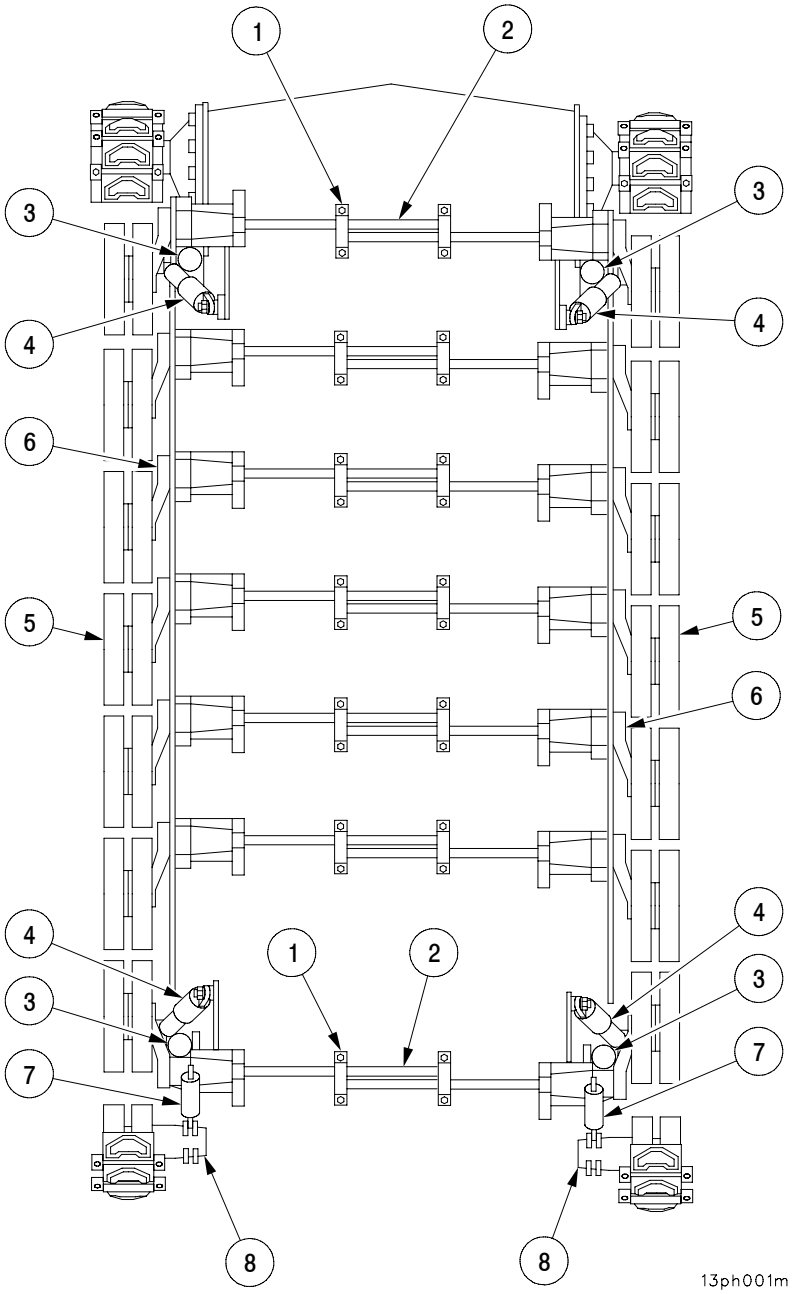

## 1-20 GLOW PLUG SYSTEM.

The glow plug system is used to aid in cold weather starting.

1 GLOW PLUGS switch and WAIT light - GLOW PLUG switch activates controller and WAIT light.

2 Controller and glow plugs - The controller powers glow plugs and WAIT light. When activated, the WAIT light comes on for 35 seconds while glow plugs reach sufficient temperature. The WAIT light then flashes to indicate that the engine can be started. After the engine is started, the WAIT light and glow plugs stay on for an additional 60 seconds.

3 Engine - Contains controller and eight glow plugs.

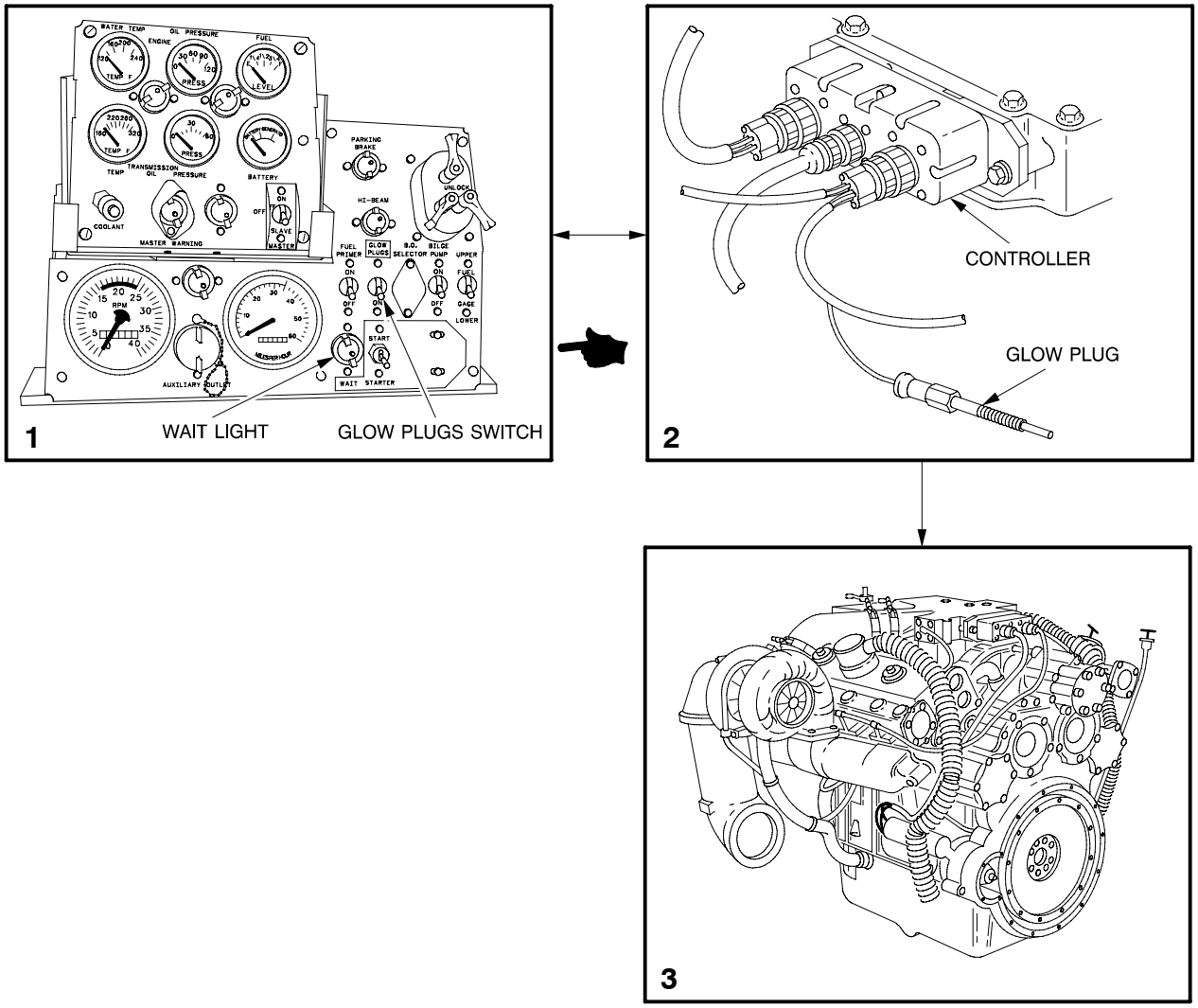


01ph003m

## 1-21 TRAVEL LOCK SYSTEM.

A remote control travel lock provides for release or engagement of the gun tube travel lock from the driver's compartment using an electrical actuator.

1 Master relay - delivers electrical power (24 V dc) to operating systems when the MASTER switch is ON.

2 Travel lock control box - activates and controls the travel lock unit.

3 Actuator assembly - moves the gun tube travel lock unit (4).

4 Gun tube travel lock unit - locks and unlocks the gun for travel and firing.

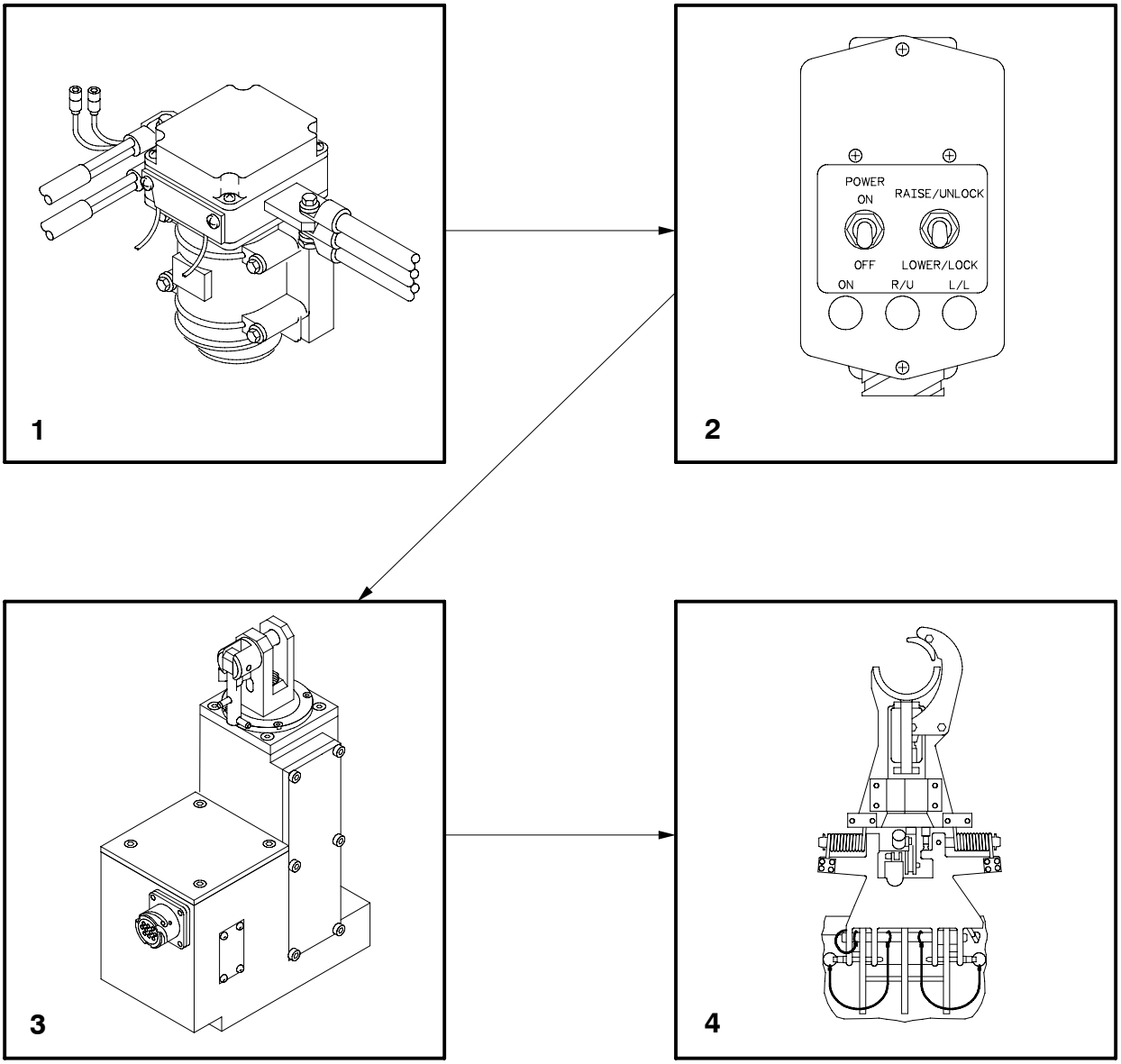

## 1-22 AFCS, PDIU, AND CAB NAVIGATION SYSTEM.

The Automatic Fire Control System (AFCS) consists of the following major assemblies:

AFCS Computer Unit (ACU)
Display Unit (DU)
Power Conditioner Unit (PCU)
Backup Batteries (2 each)
Azimuth Tachometer (Az Tach)
Elevation Tachometer (El Tach)
Hydraulic Components (manifolds, servo valves, solenoid valve, and pilot check valves).
AFCS Harness Assemblies
Vehicle Motion Sensor (VMS) Modems (1-hull/1-cab)
Tube Temperature Sensor (TTS)
Precision Lightweight GPS Receiver (PLGR) or Defense Advanced GPS Receiver (DAGR)
Muzzle Velocity Sensor (MVS)

The AFCS receives target information, calculates weapons position and automatically lays gun tube. Calls for fire are accepted directly. Communication can be performed with any authorized source. Processing of input and output messages is handled by ACU.

Weapon position is calculated and provided by Dynamic Reference Unit Hybrid (DRUH) to AFCS. Knowing weapon position, orientation and call-for-fire data, the Weapons Control (WC) calculates proper elevation and azimuth which is displayed on the DU. The lay switch causes the WC of ACU to drive the gun servos to lay the gun in elevation and azimuth. DRUH Nav Systems require periodic stops to align the AFCS. These stops are called Zero Velocity Updates (ZUPT). The DU panel alerts the operator when a ZUPT is required. The AFCS has built-in protection in case of a nuclear event. The detector will shut down the AFCS when it detects a nuclear event.

The AFCS also has a Built-In Training Device (Embedded Trainer). This can be used as a tutorial device to train, maintain, improve and evaluate crew performance efficiency. This function allows for simulating Move and Fire Missions under a variety of battlefield scenarios. These include: Shoot Heavy, Move Heavy, Modified, Balanced, as well as Degraded conditions (for AFCS), all without need for radio communications. In addition, Embedded Trainer can be run from a Beginner's Tutorial option through a full-scale scenario. A TTS, powered by the AFCS, is provided to give the crew the temperature of the tube during firing.

The PDIU is the central collection point for information concerning the condition of the M109A6 system. It gathers, stores, and communicates information concerning failures, or impending failures, to the crew. Based on that information, the crew can either proceed in a degraded mode or enter a maintenance mode and begin performing fault detection and fault isolation to an LRU or LRUs.

## 1-22 AFCS, PDIU, AND CAB NAVIGATION SYSTEM - CONTINUED

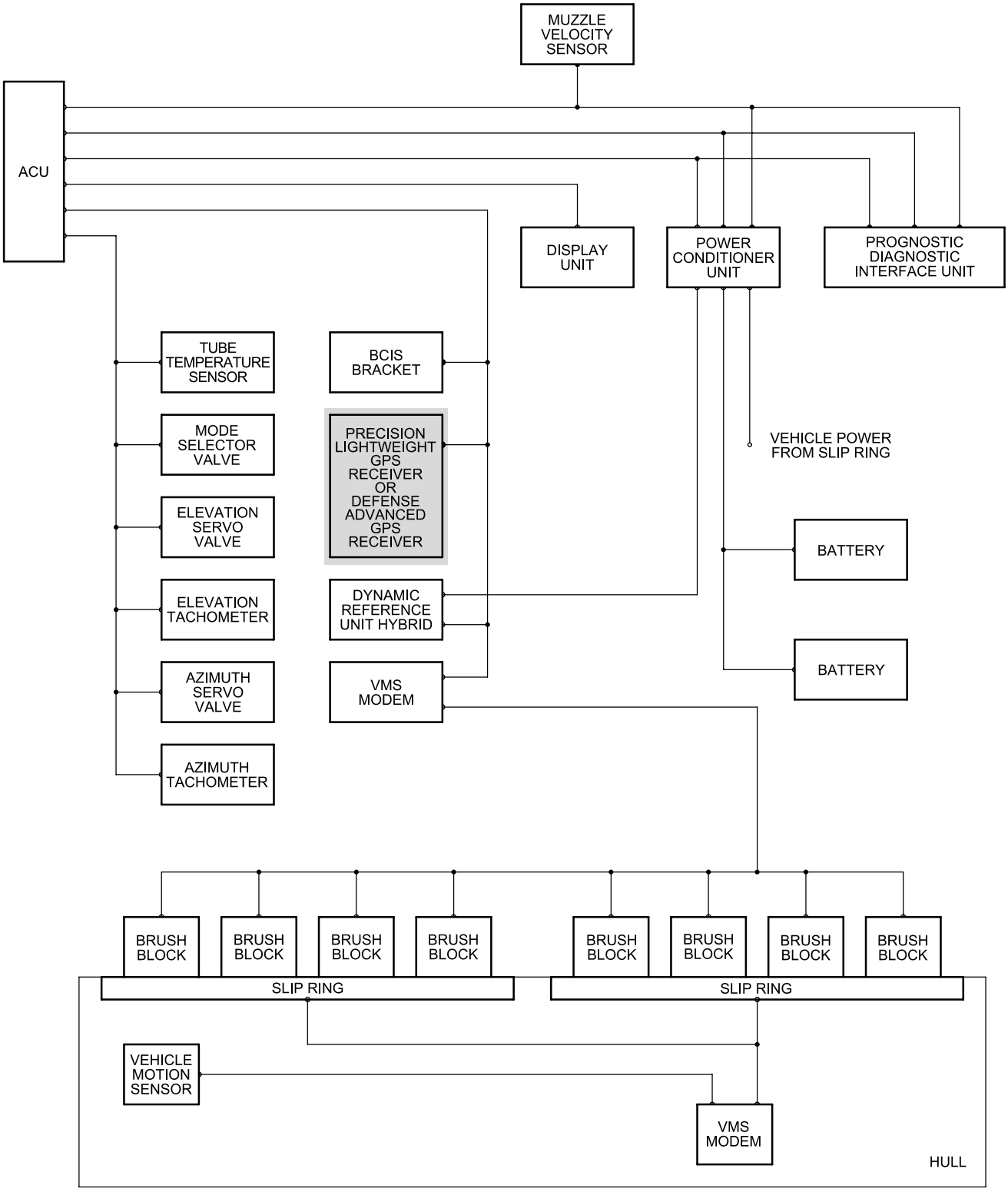

## 1-22.1 PDFCS AND CAB NAVIGATION SYSTEM.

The Paladin Digital Fire Control System (PDFCS) consists of the following major assemblies:

Paladin Digital Computer Unit (PDCU)

PDFCS Display Unit (PDU)

Power Conditioner Unit-2 (PCU-2)

Backup Batteries (2 each)

Hydraulic Components (manifolds, servo valves, solenoid valve, and pilot check valves).

PDFCS Harness Assemblies

Vehicle Motion Sensor (VMS) Modems (1-hull/1-cab)

Tube Temperature Sensor (TTS)

Precision Lightweight GPS Receiver (PLGR) or Defense Advanced GPS Receiver (DAGR)

Paladin Muzzle Velocity System (PMVS)

Platform Integration Kit (PIK)

PIK Interface Adapter (PIA)

Enhanced Portable Inductive Artillery Fuze Setter (EPIAFS)

The PDFCS receives target information, calculates weapons position and automatically lays gun tube. Calls for fire are accepted directly. Communications can be performed with any authorized source. Processing of input and output is handled by PDCU.

Weapon position is calculated and provided by Dynamic Reference Unit Hybrid (DRUH) to PDFCS. Knowing weapon position, orientation and call-for-fire data, the Weapons Control (WC) calculates proper elevation and azimuth which is displayed on the PDU. The lay switch causes the WC of PDCU to drive the gun servos to lay the gun in elevation and azimuth. DRUH Nav Systems require periodic stops to align the PDFCS. These stops are called Zero Velocity Updates (ZUPT). The PDU panel alerts the operator when a ZUPT is required. The PDFCS has built-in protection in case of a nuclear event. The detector will shut down the PDFCS when it detects a nuclear event.

The PDFCS also has a Built-In Training Device (Embedded Trainer). This can be used as a tutorial device to train, maintain, improve and evaluate crew performance efficiency. This function allows for simulating Move and Fire Missions under a variety of battlefield scenarios. These include: Shoot Heavy, Move Heavy, Modified, Balanced, as well as Degraded conditions (for PDFCS), all without need for radio communications. In addition, Embedded Trainer can be run from a Beginner's Tutorial option through a full-scale scenario. A TTS, powered by the PDFCS, is provided to give the crew the temperature of the tube during firing.

## 1-22.1 PDFCS AND CAB NAVIGATION SYSTEM.

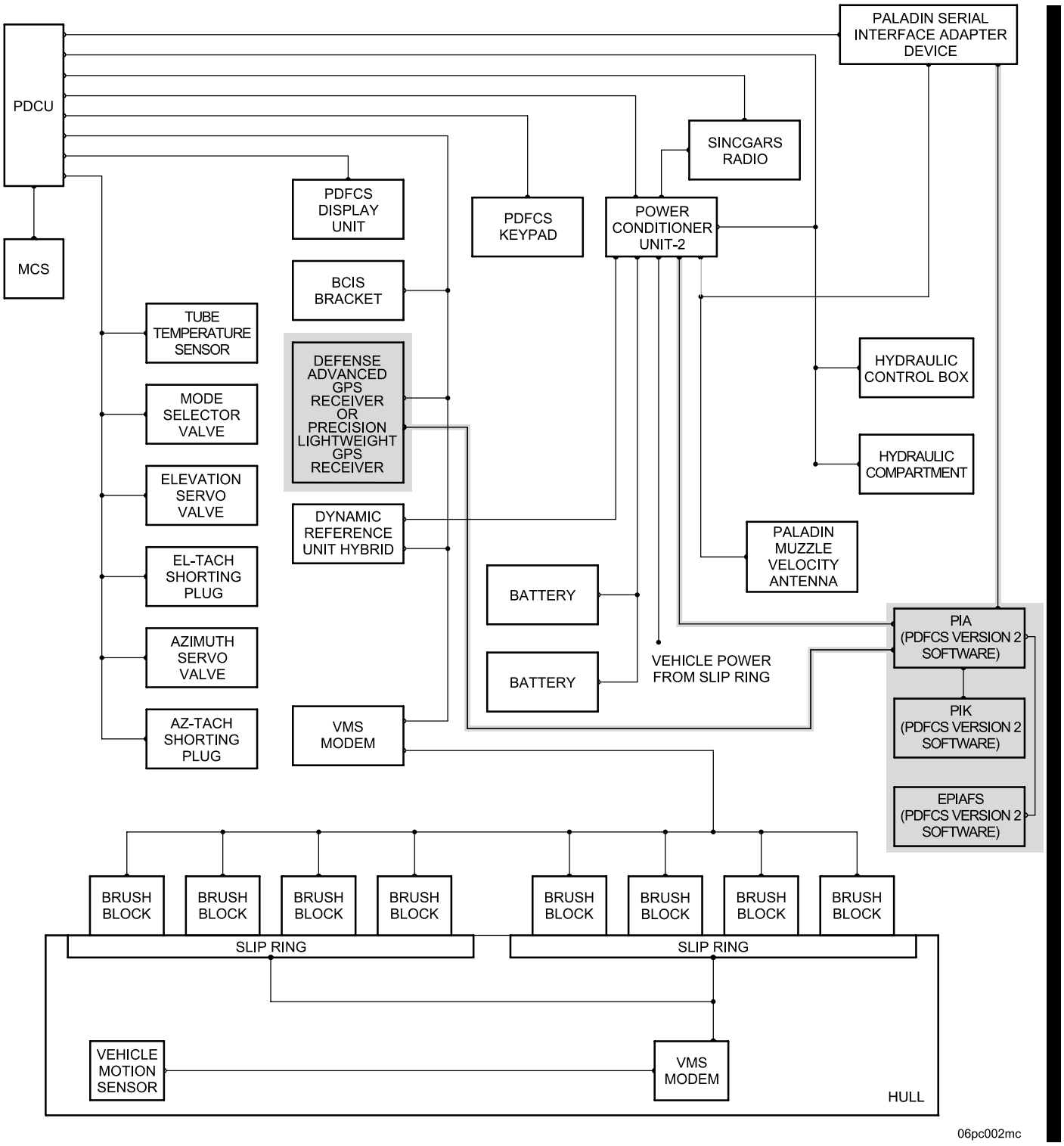

# Section IV. SECTION DRILL

## 1-23 GENERAL.

The purpose of section drill is to improve the performance of the howitzer section through execution of assigned tasks and cross training of section personnel.

## 1-24 INSTRUCTIONS.

a. Section drill must be conducted in silence, except for commands and reports. The section must be drilled until reaction to commands is quick, automatic, and correct.

b. Battery officers will supervise the drill. Errors will be corrected immediately.

c. Duties should be rotated during training so that each member of the section can perform all duties within the section.

## 1-25 PRELIMINARY COMMANDS AND FORMATIONS.

### 1-25.1 To Form The Section.

To Fall In. The chief of section takes his post. On the command of execution the section forms in a single rank, at close interval, centered on and facing the chief of section at a distance of 3 paces. Numbered cannoneers form in order between the ammunition team chief and the howitzer driver. The chief of section may indicate in his preparatory command the place and direction in which the section is to form. At the first formation for a drill or exercise, the caution “As howitzer section” precedes the command. The commands are FALL IN or 1. IN FRONT (REAR) OF YOUR PIECE, 2. FALL IN. Execution is as follows: The section moves at double time and forms at close intervals, guiding on the gunner. The driver of the section vehicle is to the left of the howitzer driver and is the last in line. To execute 1. IN REAR OF YOUR PIECE, 2. FALL IN, the section falls in as shown in drawing A.

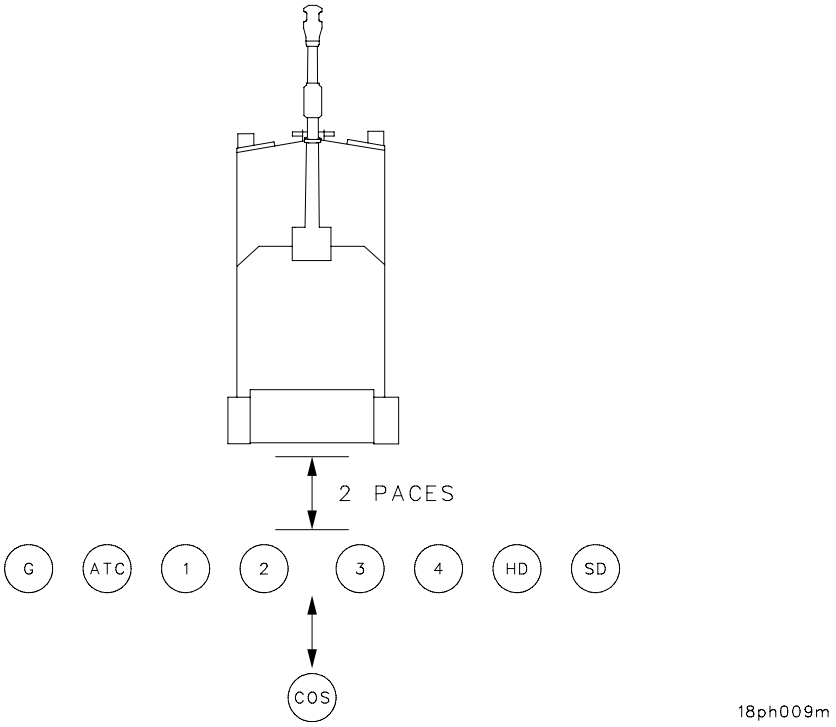


DRAWING A
FALL IN

## 1-25 PRELIMINARY COMMANDS AND FORMATIONS - CONTINUED

### 1-25.1 To Form The Section - Continued

To Call Off. The section being in formation, the command is CALL OFF. At the command all personnel in ranks (except the gunner) execute eyes right. The section then calls off in sequence; for example, “GUNNER”, “AMMUNITION TEAM CHIEF”, “1”, “2”, “3”, “4”, “HOWITZER DRIVER”, SECTION DRIVER”. Each man, except the gunner, turns his head smartly to the front as he calls out his designation.

### 1-25.2 To Post The Section.

The command is 1. CANNONEERS, 2. POSTS. The command is general and is applicable whether the section is in or out of ranks, at a halt, or marching. All movements are executed at double time and are terminated at the position of attention. The section moves to posts as shown in the following figures:

a. Dismounted, drawing B
b. Mounted, drawing C
c. Prepared for action, drawing D

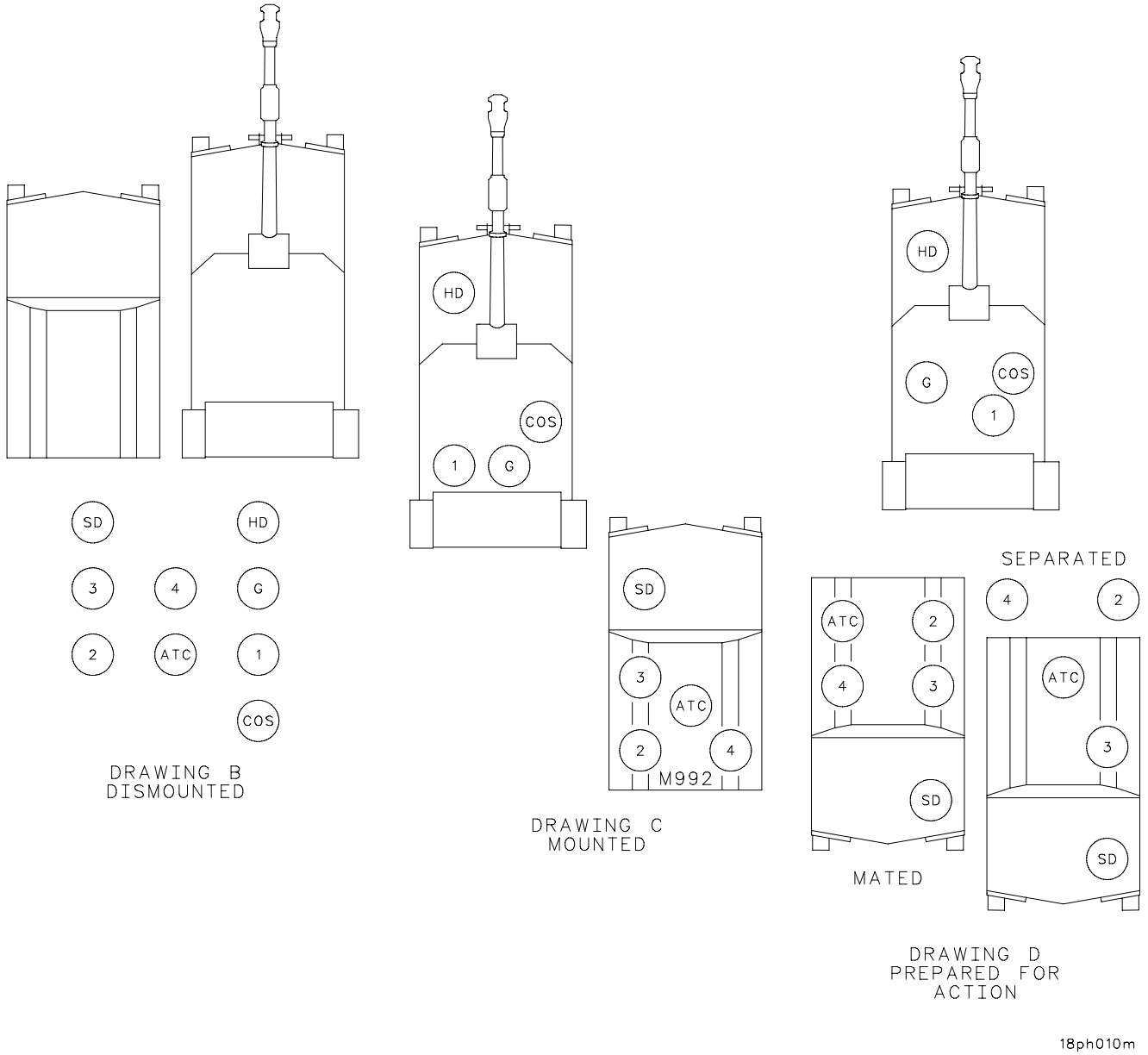

## 1-25 PRELIMINARY COMMANDS AND FORMATIONS - CONTINUED

### 1-25.3 To Change Posts.

To acquaint the members of the section with all duties and to lend variety to drill, posts should be changed often. The section being in formation (dwg. A), the commands are 1. CHANGE POSTS, 2. MARCH, or 1. SECTION CHANGE POSTS, 2. MARCH.

a. On the preparatory command of CHANGE POST, the no. 4 cannoneer will take two 15 inch steps to the rear and execute a right face. On the command of execution MARCH, the numbered cannoneers take two left steps, taking the position of the next higher numbered cannoneer. At the same time the no. 4 cannoneer moves at a double time in the rear of the rank to the post of the no. 1 cannoneer. All other members of the section stand fast.

b. On the preparatory command of SECTION CHANGE POST, the no. 4 cannoneer will take two 15 inch steps to the rear and execute a right face. On the command of execution MARCH, the Gunner, ATC and all numbered cannoneers take two left steps. At the same time the no. 4 cannoneer moves at a double time at the rear of the rank and assumes the position of the Gunner. All other section members stand fast.

### 1-25.4 To Mount.

The commands are 1. PREPARE TO MOUNT, 2. MOUNT

a. At the preparatory command, the section moves at double time to the positions shown in drawing B. At the command of execution, all personnel mount as indicated in drawing C. The chief of section, driver, gunner, and no. 1 cannoneer mount the howitzer. Likewise, at the command of execution, the ammunition team chief, the section driver, and nos. 2, 3, and 4 mount the section vehicle. If any members of the section are not to mount, their designation is announced with the caution, STAND FAST, given between the preparatory command and the command of execution. For example, 1. PREPARE TO MOUNT, DRIVERS STAND FAST, 2. MOUNT.

b. If the command is MOUNT, the section mounts in the manner and order prescribed for the command 1. PREPARE TO MOUNT, 2. MOUNT.

### 1-25.5 To Dismount.

The commands are 1. PREPARE TO DISMOUNT, 2. DISMOUNT.

a. At the preparatory command, the personnel mounted in the section vehicle unlatch and open the doors of the vehicle and all members of the section assume positions from which they can dismount promptly. At the command of execution, they dismount and take (at double time) the posts shown in drawing B.

b. If the command is DISMOUNT, the section dismounts in the manner and order prescribed for the command 1. PREPARE TO DISMOUNT, 2. DISMOUNT.

### 1-25.6 To Prepare For Action.

At the single command PREPARE FOR ACTION, the section assumes, at double time, the posts shown in drawing D.

The commands are 1. PREPARE TO MOUNT, 2. MOUNT.

## 1-26 BREAK PERIODS DURING TRAINING OR FIRING.

a. At Drill. When it is desired to give the personnel a rest from drill or to relieve them temporarily from formation or post, the command FALL OUT is given. The command may be given at any time and means that the section is to remain in the drill area.

b. When Firing. When firing has been suspended temporarily, but it is desired to have the section remain in the vicinity of the howitzer, the command FALL OUT is given. Men stand clear of the piece to ensure that settings remain undisturbed. During these periods, the chief of section may direct the men to improve the position, replenish ammunition, or do other necessary work.

## 1-27 *REDUCED CREW DRILL.

It is normal to expect gun crews to be reduced to less than the prescribed TOE strength due to illness, casualties, battery taskings, and the need to rest personnel. To meet the need of these occasions and the need to maintain operations of the section in as orderly a manner as possible, the duties of the individuals of the section have been combined as shown below. The reduced crew drill was developed under the Army Standardization Program and the duties as listed below are to be considered standard procedures.

| | | | |
|---|---|---|---|
| COS | COS | COS | COS |
| G | G | G | G |
| ATC | ATC | ATC | ATC |
| #1 | #1/HD | #1/HD | #1/HD |
| #2 | #2 | #2/3/AVD | #2/#3/AVD/#4 |
| #3/AVD | #3/AVD | #4 | |
| #4 | #4 | | |
| HD | | | |

The section chief will assign specific duties to crewmembers when the number of available personnel falls below the level shown above.

*Standardized procedures for operating with a reduced crew are identified with an asterisk preceding the title.

# CHAPTER 2
# OPERATING INSTRUCTIONS

## Section I. DESCRIPTION AND USE OF OPERATOR'S CONTROLS AND INDICATORS

## 2-1 DRIVER'S CONTROLS AND INDICATORS.

### 2-1.1 Driver's Controls and Equipment.

| Key | Control or Indicator | Function |
|---|---|---|
| 1 | Driver's Periscope | Provides vision to operate vehicle with driver's hatch closed. |
| 2 | Driver's Night Vision Device | Provides vision to operate vehicle during night operation. |
| 3 | Dome Light Switch | Turns ON/OFF dome light. |
| 4 | Hatch Locking Lever | Locks and unlocks driver's hatch. |
| 5 | Fuel Shut-Off Handle | Shuts off fuel supply to engine. |
| 6 | Winterization Heater Control Box | Controls operation of heater assembly. |
| 7 | Travel Lock Control Panel | Controls operation of travel lock. |
| 8 | Transmission Shift Selector | Selects driving range for forward and reverse operation. |

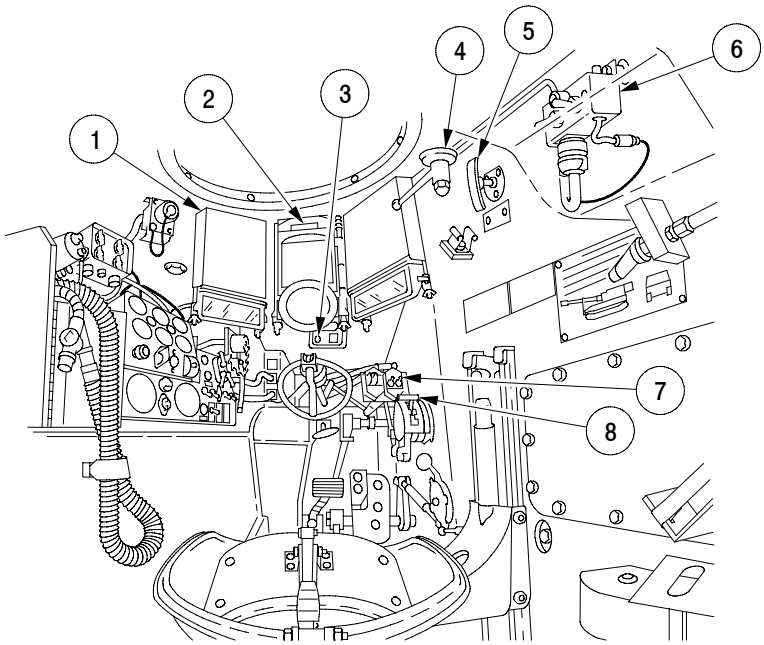


18ph012m

## 2-1 DRIVER'S CONTROLS AND INDICATORS - CONTINUED

### 2-1.1 Driver's Controls and Equipment - Continued

| Key | Control or Indicator | Function |
|---|---|---|
| 9 | Heater (M3) | Warms breathable filtered air received at Ventilated Face Piece (VFP). |
| 10 | Full Function Crew Station (FFCS) | Part of vehicular intercom system station number 6 for driver. |
| 11 | NATO Slave Receptacle | Connects electrical system with that of another vehicle for slave starting operation. |
| 12 | Diagnostic Connector Assembly | Facilitates the use of STE-ICE-R to analyze automotive malfunctions in the powerpack. |
| 13 | Fire Extinguisher T-handle | Manually discharges engine compartment extinguisher bottles. |
| 14 | Voltage Regulator Control Box | Circuit breaker restores power to voltage regulator with engine running and circuit breaker switch in the UP position. Light is lit when regulator is inoperable. |
| 15 | Throttle Handle | Keeps engine at desired rpm. |
| 16 | Heater Vent Control | Regulates air flow through driver's compartment. |
| 17 | Seat Controls | Adjusts various positions of driver's seat. |
| 18 | Accelerator Pedal | Foot control for engine speed. |
| 19 | Brake Pedal | Activates steering unit brakes to stop vehicle. |
| 20 | Brake Handle | Set brakes when parked. |
| 21 | Steering Wheel | Turns vehicle left (counterclockwise) or right (clockwise). |
| 22 | Instrument Panel | Refer to para 2-1.2.2. |
| 23 | Stowage Bracket | Stowage for the AN/VVS-2(V)4 Night Viewer or periscope when not in use. |
| 24 | Portable Instrument Panel | Refer to para 2-1.2.1. |
| 25 | Intercommunication Control | Used to adjust volume of audio heard in operator's headset. |

# 2-1 DRIVER'S CONTROLS AND INDICATORS - CONTINUED

## 2-1.1 Driver's Controls and Equipment - Continued

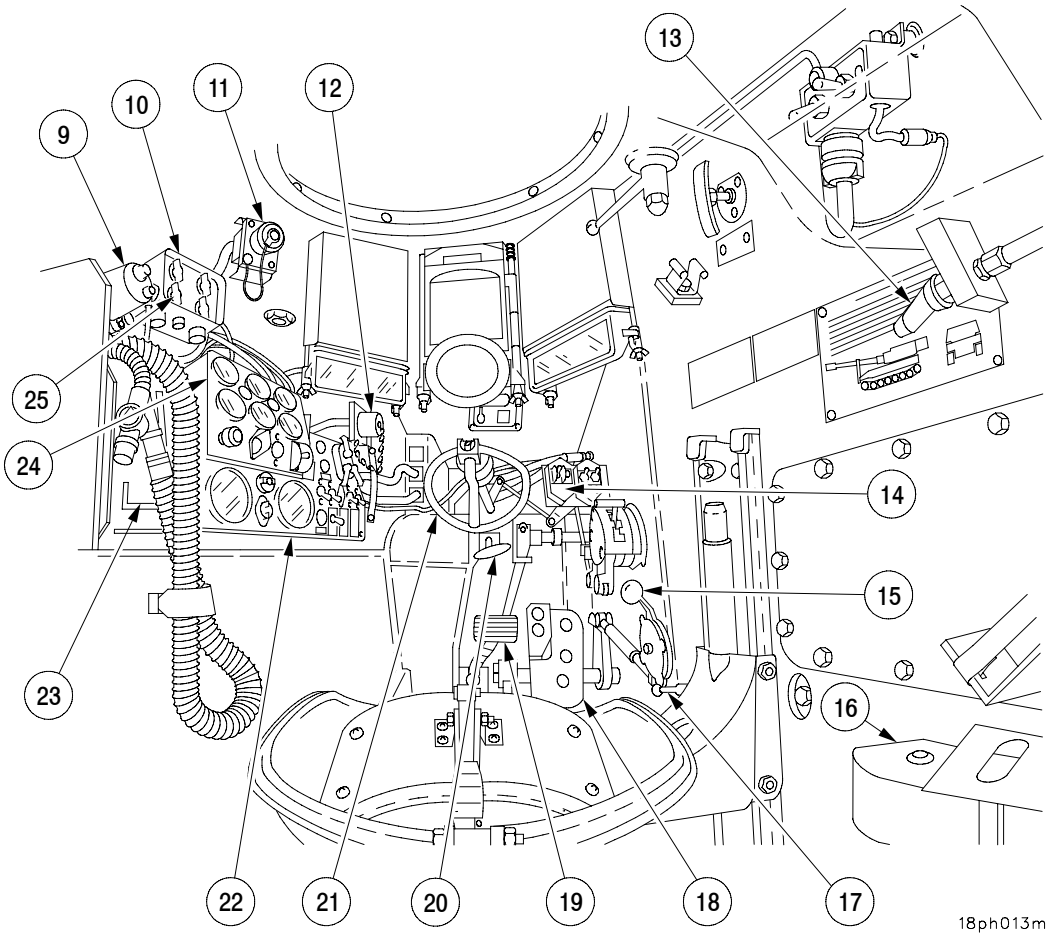

# 2-1 DRIVER'S CONTROLS AND INDICATORS - CONTINUED

## 2-1.2 Driver's Instrument Panels.

2-1.2.1 Portable Instrument Panel.

| Key | Control or Indicator | Function |
|---|---|---|
| 1 | ENGINE OIL PRESS Gage | Indicates pressure of engine oil in pounds per square inch (psi). Normal operating range is 30 to 50 psi. |
| 2 | PANEL Lights (2) | Lights gage panel. Controlled by lever on light switch assembly. |
| 3 | FUEL Gage | Indicates the amount of fuel in either tank. |
| 4 | BATTERY Indicator | Indicates battery condition. Indicates generator voltage when engine is running. |
| 5 | MASTER Switch | Activates the vehicle electrical system. |
| 6 | Master Indicator Light | Lights red when MASTER switch is ON. |
| 7 | TRANSMISSION OIL PRESS Gage | Indicates pressure of transmission oil in pounds per square inch (psi). Normal operating pressure is 10 to 45 psi. |
| 8 | MASTER WARNING Light | Lights red to warn driver of critical condition in engine or transmission. |
| 9 | LOW COOLANT Light | Lights red when engine coolant is low. |
| 10 | TRANSMISSION OIL TEMP Gage | Indicates temperature of transmission oil in Fahrenheit. Normal operating range is 220 to 240°F. |
| 11 | ENGINE WATER TEMP Gage | Indicates temperature of engine coolant in degrees Fahrenheit. Normal operating range is 170 to 185°F. |

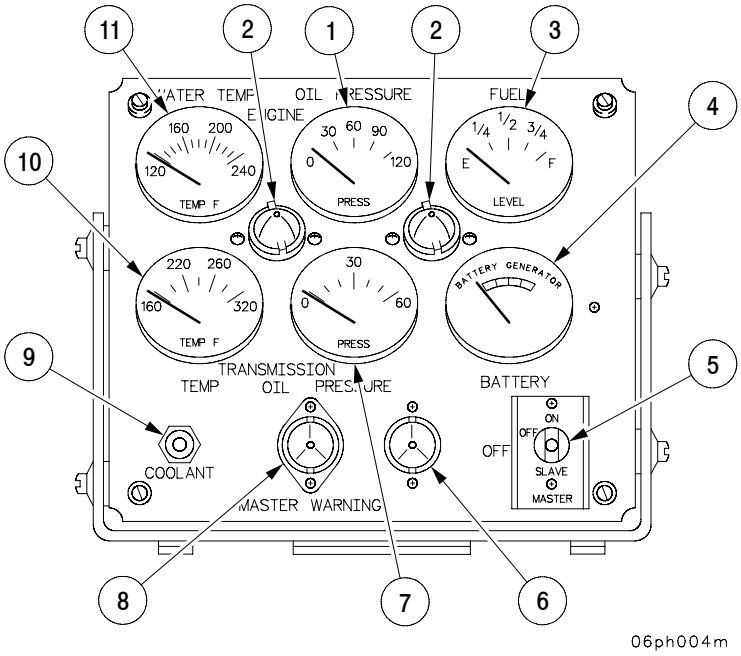

# 2-1 DRIVER'S CONTROLS AND INDICATORS - CONTINUED

## 2-1.2 Driver's Instrument Panels - Continued

2-1.2.2 Instrument Panel.

| Key | Control or Indicator | Function |
|---|---|---|
| 1 | PARKING BRAKE Light | When lit, indicates parking brake is set, or not fully released. |
| 2 | Light Switch Assembly | Controls driving and panel lights. |
| 3 | FUEL UPPER/LOWER Switch | Selects upper or lower fuel tanks. |
| 4 | BILGE PUMP Switch | Turns power ON/OFF to bilge pump. |
| 5 | GLOW PLUGS Switch | Illuminates WAIT light and controls the controller. |
| 6 | STARTER Switch | Starts vehicle for operation. |
| 7 | GLOW PLUG WAIT Light | When lit, indicates glow plug conditions for starting engine. |
| 8 | Speedometer | Indicates vehicle speed in miles per hour (mph). |
| 9 | AUXILIARY OUTLET | Provides 24 volt power from electrical system to operate auxiliary electrical equipment. |
| 10 | Tachometer/Hourmeter | Indicates engine speed in revolutions per minute (rpm) and operating hours. |
| 11 | Panel Light | Lights instrument panel. Controlled by lever on light switch assembly. |
| 12 | FUEL PRIMER Switch | Turns power ON/OFF to fuel primer pump. |
| 13 | HIGH BEAM Indicator Light | Indicates when service headlights are on high beam. |

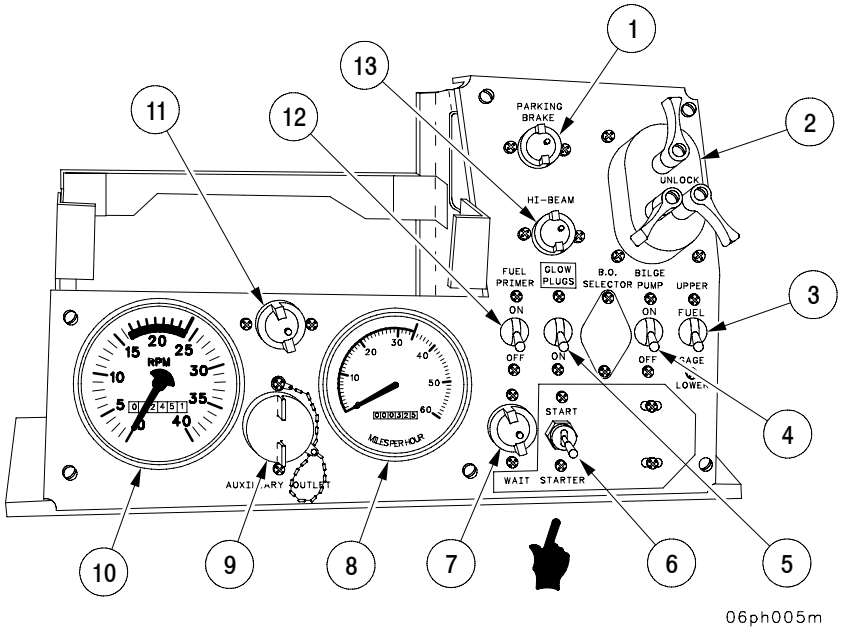

## 2-1 DRIVER'S CONTROLS AND INDICATORS - CONTINUED

### 2-1.3 Travel Lock Control Box.

| Key | Control or Indicator | Function |
|---|---|---|
| 1 | ON Light | Lights green when power switch is on. |
| 2 | R/U Light | Lights green when the extension mode is complete and travel lock is raised to the upright position with the clamping jaw open. |
| 3 | L/L Light | Lights green when the actuator retraction mode is complete and the travel lock assembly is lowered to the deck and/or the clamping jaw is locked. |
| 4 | RAISE/UNLOCK/LOWER/LOCK Switch | Raises/unlocks, lowers/locks travel lock. |
| 5 | POWER ON/OFF Switch | Turns power ON/OFF to travel lock system. |

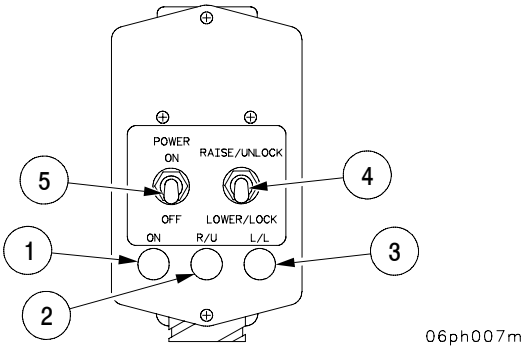


### 2-1.4 Winterization Heater Control Box.

| Key | Control or Indicator | Function |
|---|---|---|
| 1 | HI/LO Switch | Selector for HIGH or LOW mode of heater operation. |
| 2 | HEATER Light | Lights when heater is operating. |
| 3 | START/RUN/OFF Switch | Starts, runs, or turns off heater. |

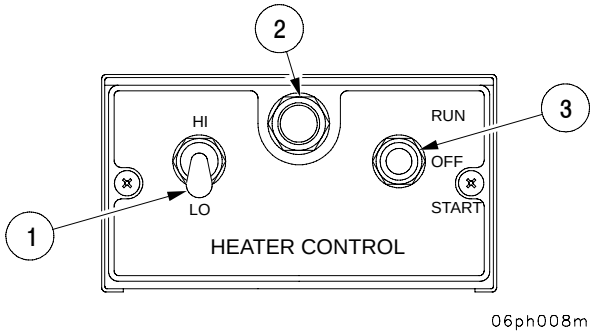

## 2-2 COS CONTROLS AND INDICATORS.

| Key | Control or Indicator | Function |
|---|---|---|
| 1 | Hydraulic Control Box | Refer to para 2-2.2. |
| 2 | Display Unit (DU) | Refer to para 2-2.1. |
| 3 | Power Control Handle | Controls main gun elevation and traverses cab during power operation. |
| 4 | Heater (M3) | Warms breathable filtered air received at Ventilated Face Piece (VFP). |
| 5 | Full Function Crew Station (FFCS) | Part of vehicular intercom system. Station number 1, commander and station number 2, cannoneer. |
| 6 | Starter Protection Override Switch | Provides capability to override starter protection circuit in emergencies. |
| 7 | Master Control Station | Master control for intercom system. |

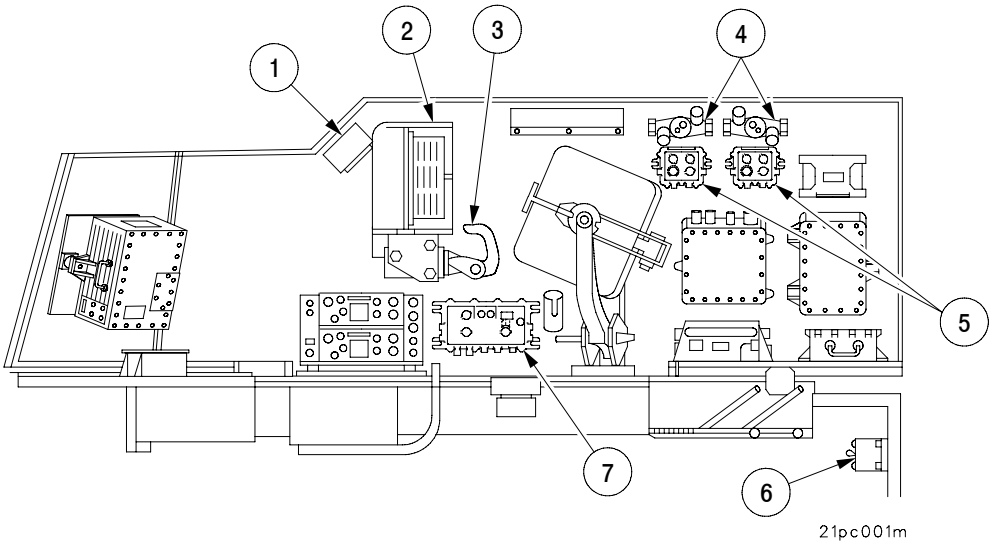

## 2-2 COS CONTROLS AND INDICATORS - CONTINUED

### 2-2.1 Display Unit.

| Key | Control or Indicator | Function |
|---|---|---|
| 1 | EL Panel | Displays various menus, operator alerts/warnings, messages, and orders/commands. |
| 2 | GUN SERVO Indicator | Lights during AFCS movement of weapon. |
| 3 | GUN SERVO Switch | Turns ON/OFF gun servo units. |
| 4 | FAULT Indicator | Lights when a failure is detected by internal BIT. |
| 5 | ARROW Keys | Moves highlighted area of display on EL panel. |
| 6 | STOW Key | Returns gun to a position above the travel lock. |
| 7 | LAY Key | Automatically drives gun to Command (CMD) position (azimuth and elevation) when servo is on. |
| 8 | LOAD Key | Automatically returns gun to a preselected load elevation angle when gun servo is on. |
| 9 | ENT Key | Used to enter data. |
| 10 | NUMERICAL Keypad | Used to select numeric data. |
| 11 | CLEAR Key | Used to delete numeric data. |
| 12 | POWER Switch | Turns ON/OFF AFCS power. |
| 13 | TRAINING Switch | Turns ON/OFF training mode. |
| 14 | SOFT Keys | Function of keys depends on menu displayed. Lowest display line identifies function. |

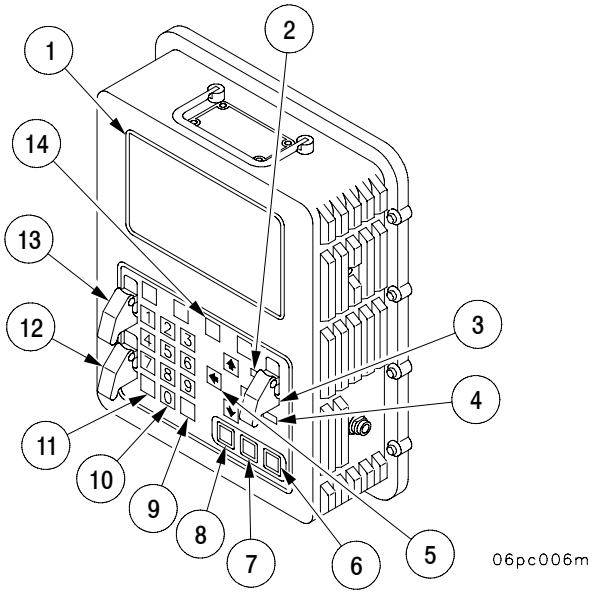

## 2-2 COS CONTROLS AND INDICATORS - CONTINUED

### 2-2.1.1 PDFCS Display Unit (PDU) and PDFCS Keypad.

| Key | Control or Indicator | Function |
|---|---|---|
| 1 | PDFCS Display Unit | Displays both FC and SA screen. Enter data and commands using the keypad in FC mode. Functions as a touch screen display in SA mode. |
| 2 | PWR | Display Unit Power ON/OFF. |
| 3 | BRT+ LED+ | Increase Display backlight intensity (increase LED brightness) |
| 4 | BRT- LED- | Decrease Display backlight intensity (decrease LED brightness) |
| 5 | BLK OUT LAMP | Backlight ON/OFF (lamp test) |
| 6 | ESC | Escape control (F1 control) |
| 7 | →\| <br> \|← | Right TAB Stops (left tab stops) |
| 8 | ↑ <br> ← | Tap Up one space (TAB left one space) |
| 9 | ↓ <br> → | Tap Down one space (TAB right one space) |
| 10 | ENT | ENTER (space) |
| 11 | FCN | Function |
| 12 | Function keys | For use only with FBCB2 software in SA mode. |

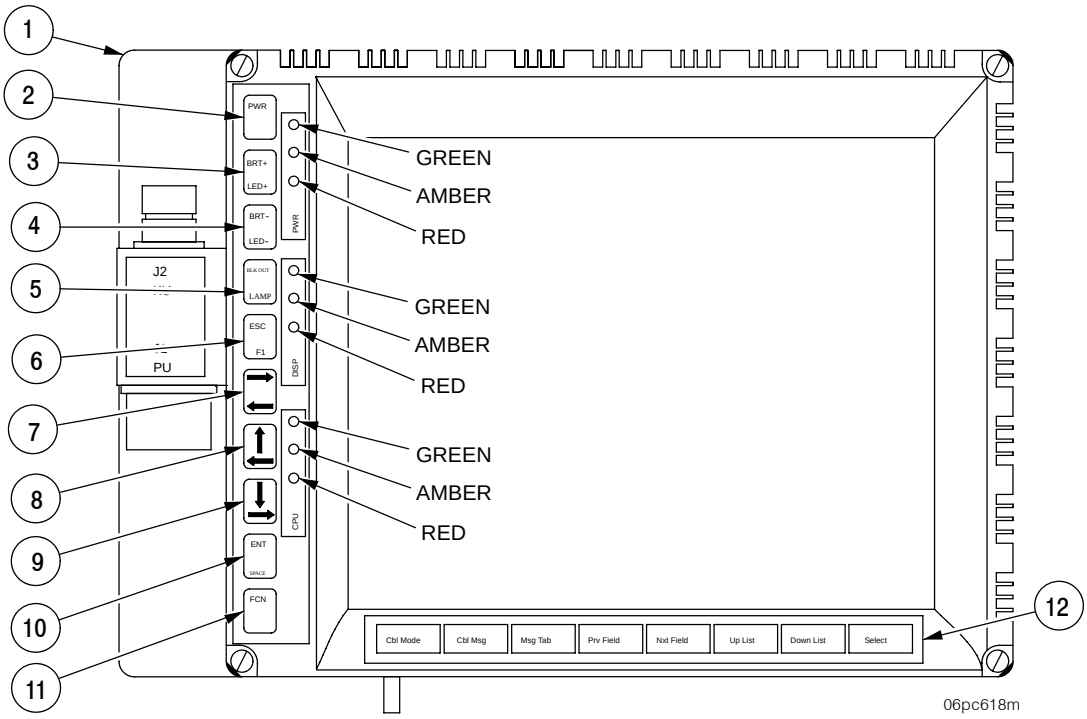

## 2-2 COS CONTROLS AND INDICATORS - CONTINUED

### 2-2.1.1 PDFCS Display Unit (PDU) and PDFCS Keypad - Continued

| Key | Control or Indicator | Function |
|---|---|---|
| 13 | PDFCS Keypad | Bears sealed membrane buttons with switch guards protecting the power, training, and gun on/off switches. The PDFCS keypad is used in Fire Control (FC) mode and is inoperative in the Situation Awareness (SA) mode. |
| 14 | GUN SERVO Indicator | Lights during PDFCS movement of weapon. |
| 15 | GUN SERVO Switch | Turns ON/OFF gun servo units. |
| 16 | ARROW Keys | Moves highlighted area of display on PDU. |
| 17 | FAULT Indicator | Lights when a failure is detected by internal BIT. |
| 18 | STOW Key | Returns gun to a position above the travel lock. |
| 19 | LAY Key | Automatically drives gun to Command (CMD) position (azimuth and elevation) when servo is on. |
| 20 | LOAD Key | Automatically returns gun to a preselected load elevation angle when gun servo is on. |
| 21 | ENT Key | Used to enter data. |
| 22 | NUMERICAL Keypad | Used to select numeric data. |
| 23 | CLEAR Key | Used to delete numeric data. |
| 24 | POWER Switch | Turns ON/OFF PDFCS power. |
| 25 | TRAINING Switch | Turns ON/OFF training mode. |
| 26 | SOFT Keys | Function of keys depends on menu displayed. Lowest display line identifies function. |
| 27 | FC/SA | Switches between Fire Control and Situational Awareness modes. |

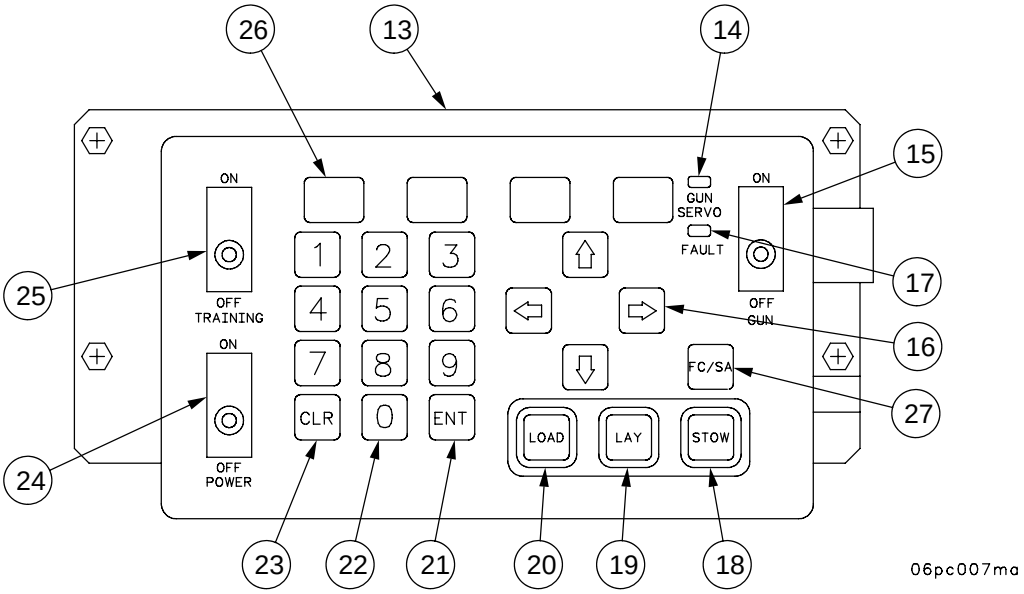

## 2-2 COS CONTROLS AND INDICATORS - CONTINUED

### 2-2.2 Hydraulic Control Box.

| Key | Control or Indicator | Function |
|---|---|---|
| 1 | HYDRAULIC POWER Light | Light is green when POWER switch is in the ON position. |
| 2 | HYDRAULIC WARMUP Light | Light is amber when switch is in AUTO position until hydraulic fluid operating temperature is reached. |
| 3 | HYDRAULIC WARMUP Switch | In AUTO position, allows hydraulic fluid to warm up to operating temperature. |
| 4 | HYDRAULIC COOLING Light | Light is green when fan is operating. |
| 5 | HYDRAULIC COOLING Switch | Selects operation mode of hydraulic cooling fan. |
| 6 | TRAVERSE LIMIT Switch | Allows COS to override the traverse limit function (in manual hydraulic operation only). |
| 7 | TRAVERSE LIMIT Light | Light is red when gun tube is outside of traverse limits (45° left and right of center). |
| 8 | COS/GUNNER ELEVATE CONTROL Switch | Allows selection of elevating mode to either the COS or GNR control handle. |
| 9 | COS/GUNNER TRAVERSE CONTROL Switch | Allows selection of traversing mode to either the COS or GNR control handle. |
| 10 | TRAVERSE MODE Switch | Places traversing operation in the POWER or HANDWHEEL mode. |
| 11 | HYDRAULIC POWER ON/OFF Switch | Turns power ON/OFF to hydraulic system. |

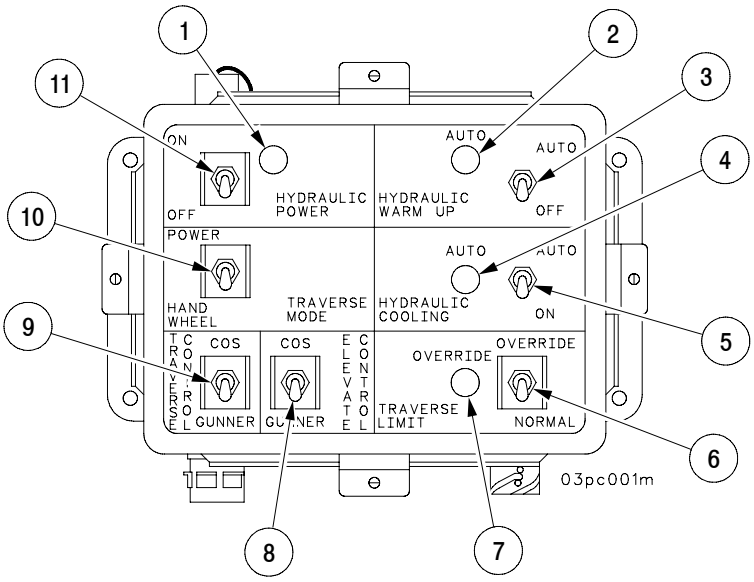

## 2-3 GUNNER'S CONTROLS AND INDICATORS.

### 2-3.1 Gunner's Controls and Equipment.

| Key | Control or Indicator | Function |
|---|---|---|
| 1 | Heater (M3) | Warms breathable filtered air received at Ventilation Face Piece (VFP). |
| 2 | Full Function Crew Station (FFCS) | Part of vehicular intercom system station number 3 gunner's and station number 4 auxiliary. |
| 3 | Hydraulic Clutch Valve | Prevents traverse manual handwheel from turning when operating in power mode. |
| 4 | Elevating Hand Pump | Manually elevates and depresses main gun. |
| 5 | Power Control Handles | Elevates gun in elevation and traverses cab. |
| 6 | Manual Traversing Handwheel | Manually traverses cab. |
| 7 | Equilibrator Hand Pump | Used to equilibrate cannon. |
| 8 | Cab Traverse Lock | Mechanically locks cab to prevent traversing. |
| 9 | MCS Control Panel | Refer to para 2-3.2. |

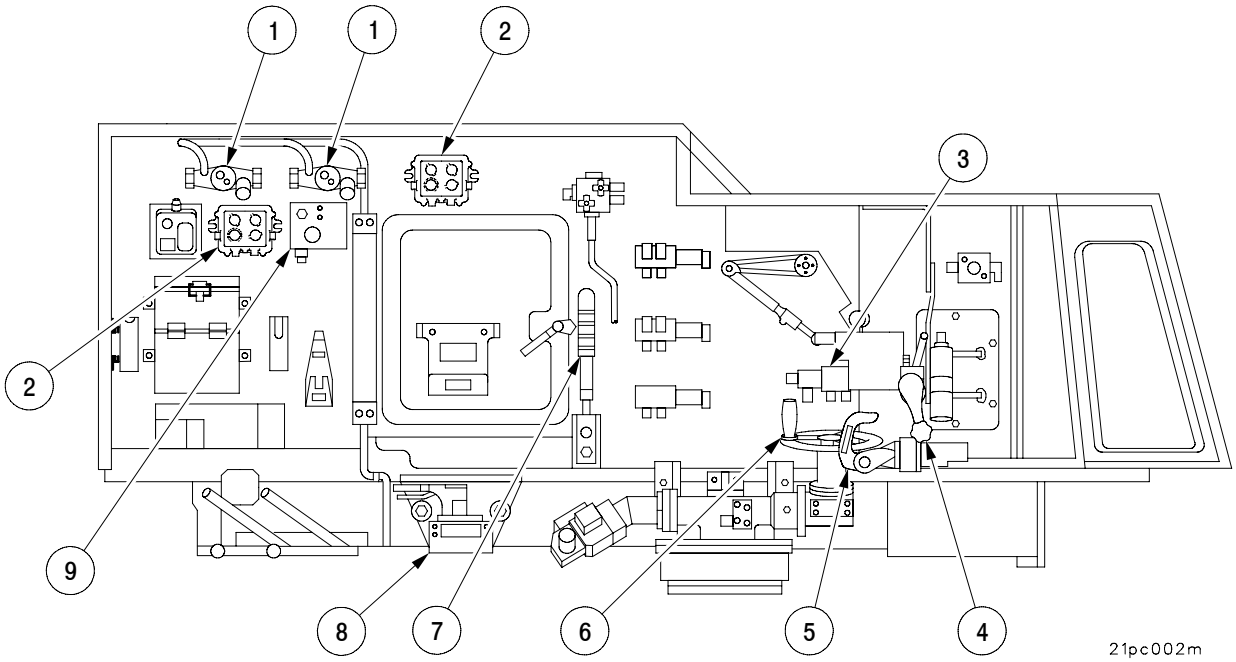

## 2-3 GUNNER'S CONTROLS AND INDICATORS - CONTINUED

### 2-3.2 MCS Control Panel.

| Key | Control or Indicator | Function |
|---|---|---|
| 1 | LAMP TEST | Tests control panel lights when MASTER switch is on. |
| 2 | CHANGE FILTER Light | Indicates when system filters need to be changed. |
| 3 | FREON PRESSURE Light | Indicates when system Freon is low. |
| 4 | Mode Select Switch | Selects OFF, LOW/HIGH AIR, and COOL operations. |

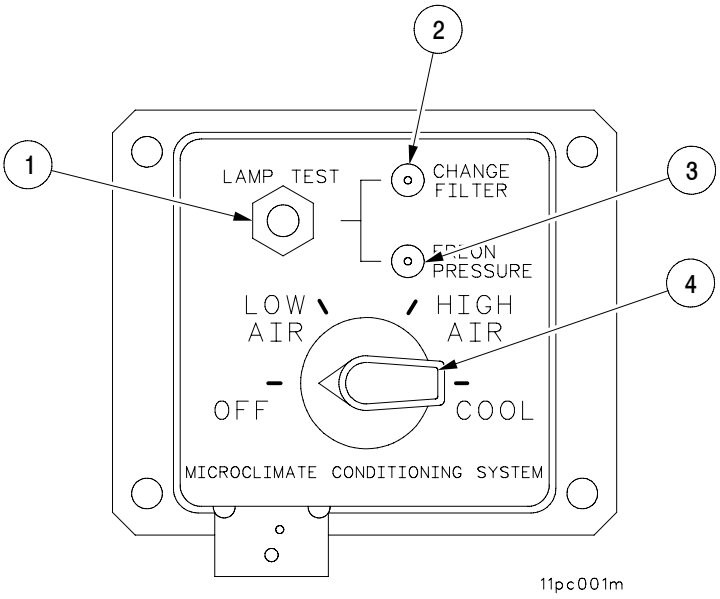

## 2-3 GUNNER'S CONTROLS AND INDICATORS - CONTINUED

### 2-3.3 Accessory Control Box.

| Key | Control or Indicator | Function |
|---|---|---|
| 1 | Panel Lights | Two lamps illuminate when power to control box is on. |
| 2 | EXHAUST Light | Illuminates when power to personnel exhaust fan is ON. |
| 3 | Ventilation Fan Selector Switch | Allows for selection of INTAKE, OFF, and EXHAUST modes. |
| 4 | LEAD FILTER CHANGE Light | Illuminates when lead filter element should be changed. |
| 5 | HEATER Light | Illuminates when heater is operating. |
| 6 | HEAT SELECTOR Switch | Allows for selection of HIGH, OFF, and LOW modes. (For vehicles with Accessory Control Box P/N 12268582.) |
| 6.1 | HEAT SELECTOR Switch | Allows for selection of HIGH or LOW modes. (For vehicles with Accessory Control Box P/N 12268547.) |
| 7 | HEATER Control Switch | Allows for selection of START, OFF, and RUN modes. (For vehicles with Accessory Control Box 12268547.) |

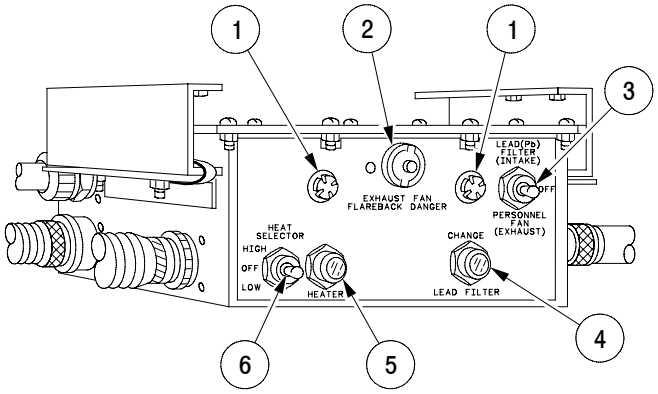


Note: P/N 12268582

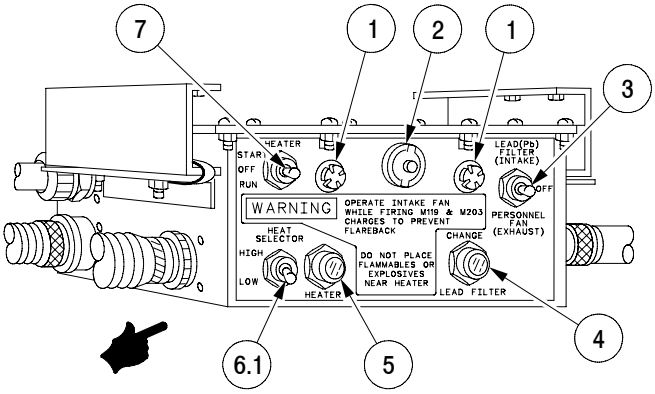


Note: P/N 12268547

06ph009ma

# Section II. PREVENTIVE MAINTENANCE CHECKS AND SERVICES (PMCS)

## 2-4 MAINTENANCE FORMS AND RECORDS.

Every mission begins and ends with the paperwork. There isn't much of it, but you have to keep it up. The forms and records you fill out have several uses. They are a permanent record of the services, repairs, and modifications made on your vehicle. They are reports to unit maintenance and to your commander. They are also checklists that tell you what is wrong with the equipment after its last use, and whether those faults have been repaired. For information on forms and records, see DA PAM 750-8.

## 2-5 PREVENTIVE MAINTENANCE CHECKS AND SERVICES.

### 2-5.1 General.

Safe and efficient howitzer operation requires regular checks of equipment. When performing PMCS, the crew discovers equipment malfunctions or performs routine maintenance for upkeep of the howitzer's systems. Malfunctions require corrective action to avoid equipment failure or injury to personnel. The suspension system requires special attention. Make sure that all lubrication tasks assigned to the crew in Appendix I are performed.

### 2-5.2 Warnings and Cautions.

Always observe the WARNINGS and CAUTIONS appearing in your PMCS table. Warnings and cautions appear before applicable procedures. You must observe these WARNINGS and CAUTIONS to prevent serious injury to yourself and others or prevent your equipment from being damaged.

### 2-5.3 Explanation of Table Entries.

a. Item Number column. Numbers in this column are for reference. When completing DA Form 2404 or DA Form 5988-E (Equipment Inspection and Maintenance Worksheet), include the item number for the check/service indicating a fault. Item numbers also appear in the order that you must do checks and services for the intervals listed.

b. Interval column. This column tells you when you must do the procedure listed in the procedure column. BEFORE procedures must be done before you operate or use the equipment for its intended mission. DURING procedures must be done during the time you are operating or using the equipment for its intended mission. AFTER procedures must be done immediately after you have operated or used your equipment.

c. Location, Item to Check/Service column. This column provides the location and the item to be checked or serviced.

d. Procedure column. This column gives the procedure you must do to check or service the item listed in the Check/Service column to know if the equipment is ready or available for its intended mission or for operation. You must do the procedure at the time stated in the interval column.

e. Not Fully Mission Capable If: column. Information in this column tells you what faults will keep your equipment from being capable of performing its primary mission. If you make check and service procedures that show fault listed in this column, do not operate the equipment. Follow standard operating procedures for maintaining the equipment or reporting equipment failure.

## 2-5 PREVENTIVE MAINTENANCE CHECKS AND SERVICES - CONTINUED

### 2-5.4 Other Table Entries.

Be sure to observe all special information and notes that appear in your table.

### 2-5.5 Guidelines to Keep in Mind While Performing PMCS.

a. Always do PREVENTIVE MAINTENANCE in the same order so it gets to be a habit. Once you've had some practice, you'll spot a problem in a hurry.

b. When performing PREVENTIVE MAINTENANCE, take along all tools needed to make the checks. Always take along clean wiping rags (item 37, Appx D).

**WARNING**

Dry-cleaning solvent (MIL-PRF-680), used to clean parts, is toxic and flammable. Wear protective goggles and gloves and use only in a well-ventilated area. Avoid contact with skin, eyes, and clothes. Do not breathe vapors. Do not use near open flame or excessive heat. Do not smoke when using solvent. Failure to do so could cause SERIOUS INJURY. If you become dizzy while using dry-cleaning solvent, get fresh air immediately, and if necessary, get medical attention. If contact with skin or clothes is made, flush thoroughly with water. If the solvent contacts your eyes, wash them with water immediately and obtain medical aid (ref. FM 4-25.11).

**WARNING**

When inspecting or working with the AFCS or PDFCS DU, if screens appear to be cracked or broken or you suspect that mercury is escaping or has escaped, avoid breathing the vapors, avoid contact with eyes, skin or clothes and exit vehicle as fast as possible. Upon exiting the vehicle, immediately contact proper authorities so that spillage can be removed. Failure to comply could result in personnel injury from mercury exposure.

## 2-5 PREVENTIVE MAINTENANCE CHECKS AND SERVICES - CONTINUED

### 2-5.5 Guidelines to Keep in Mind While Performing PMCS - Continued

**CAUTION**

- Prior to using water to clean the interior of the vehicle, make sure that PDFCS and AFCS DU screens are covered with plastic to avoid direct water and spray. If screens are cracked and mercury has escaped, it will spread to other places and make clean-up more difficult and create a health hazard.
- Prior to using water to clean the interior of the vehicle make sure that the removable hard disk drive cartridge access door is closed and all cables are properly connected or cable connectors are covered with caps. Failure to comply could result in equipment damage.

c. Keep the vehicle and individual components clean. Dirt, grease, oil, and debris may conceal a serious problem. Clean components as needed. Use dry-cleaning solvent (item 15, Appx D) on all metal surfaces. Use mild soap and water to clean rubber or plastic parts.

d. Check all attaching hardware for looseness. Tighten loose hardware before operating vehicle. For hardware that requires staking, lockwires, or nylon fasteners, notify unit maintenance.

e. Look for loose or chipped paint, rust, or gaps where parts are welded together. Report all bad welds to unit maintenance for repair before operating the vehicle.

f. Look for cracked or broken electrical insulation, bare wires, and loose or broken connectors. Tighten loose connectors and make sure wires are in good shape before operating vehicle. Report all cracked or broken electrical insulation and connectors to unit maintenance.

g. Look for fluid leaks from hoses and fittings. Check for wear and damage to hoses and fluid lines. Be sure clamps and fittings are tight. Report all stains, wet spots, and leaks to unit maintenance.

h. Check all fluids for contamination. If contamination such as rust, water, or sediment is found in the fluid, notify unit maintenance before operating vehicle.

i. Perform PMCS more often to compensate for continuous operation and abnormal conditions. High or low temperatures, prolonged periods of high rate operation, continued operation in sand, dust or exposure to moisture or salt may cause excessive wear or damage if not maintained.

## 2-5 PREVENTIVE MAINTENANCE CHECKS AND SERVICES - CONTINUED

### 2-5.6 Classification of Fluid Leaks.

The following definition concerns types/classes of fluid leakage. Each crewmember must be familiar with these definitions in order to determine whether or not the vehicle is mission capable.

**CAUTION**

Equipment operation is allowable with minor leakage (Class I or II). Consideration must be given to the fluid capacity in the item/system being checked/inspected. When in doubt, notify chief of section. When operating with Class I or Class II leaks, continue to check fluid levels as required in your PMCS. Class III leaks should be reported to chief of section or unit maintenance.

| | |
|---|---|
| Class I | Seepage of fluid as indicated by wetness or discoloration not great enough to form drops. |
| Class II | Leakage of fluid great enough to form drops but not enough to cause drops to drip from item being checked/inspected. |
| Class III | Leakage of fluid great enough to form drops that fall from the item being checked/inspected. |

### 2-5.7 Criteria for 24-hour Continuous Operation.

Refer to the following leakage criteria when operating in high stress continuous operational environment. If leaks are detected, maintain frequent monitoring and add fluid as required. Keep a record of fluid added.

Leakage Criteria for 24-Hour Period

| | Stop Vehicle Operations | Notify Unit Maintenance Repair as soon as mission allows | Repair at next Scheduled Maintenance |
|---|---|---|---|
| Hydraulic Oil (Hydraulic compartment) | 3 qt | 1 to 3 qt | 1 qt |
| Coolant | 2 gal. | 1 to 2 gal. | 1 gal. |

## TABLE 2-1. PREVENTIVE MAINTENANCE CHECKS AND SERVICES FOR HOWITZER, SELF-PROPELLED, M109A6

| Item No. | Interval | Location / Item To Check/Service | Crewmember Procedures | Not Fully Mission Capable If: |
|---|---|---|---|---|
| | | HULL EXTERIOR | **NOTE**<br>Vehicle should be parked on level ground if possible for fluid level checks. | |
| 1 | Before | Vehicle | Driver<br>Walk around vehicle. Check for any obvious fluid leakage, missing items, or damage to equipment. | Any Class III leak found. Vehicle has damage or is missing items that would make operation hazardous. |
| 2 | Before | Subfloor Drains | Driver<br>Check that 19 drain plugs and four access plates are present.<br> 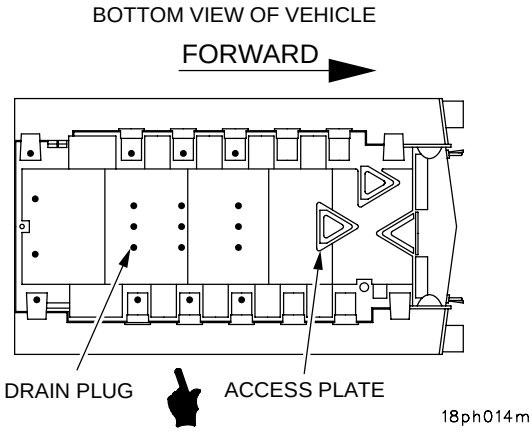 | Drain plugs or plates are not present for fording operation. |
| 3 | Before | External Fire Extinguisher Handle | Driver<br>Check to ensure handle (1) is properly seated and wire seal (2) is laced and sealed.<br> 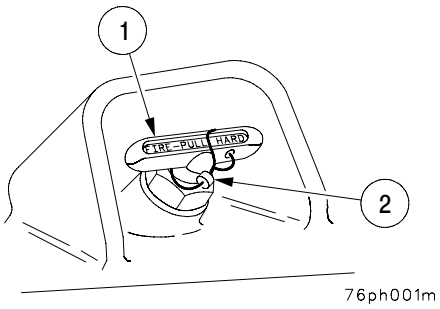 | Wire seal (2) broken, missing, or extinguisher handle (1) is pulled. |

## TABLE 2-1. PREVENTIVE MAINTENANCE CHECKS AND SERVICES FOR HOWITZER, SELF-PROPELLED, M109A6 - CONTINUED

| Item No. | Interval | Location / Item To Check/Service | Crewmember Procedures | Not Fully Mission Capable If: |
|---|---|---|---|---|
| 4 | Before | Gun Tube Travel Lock | Driver<br> 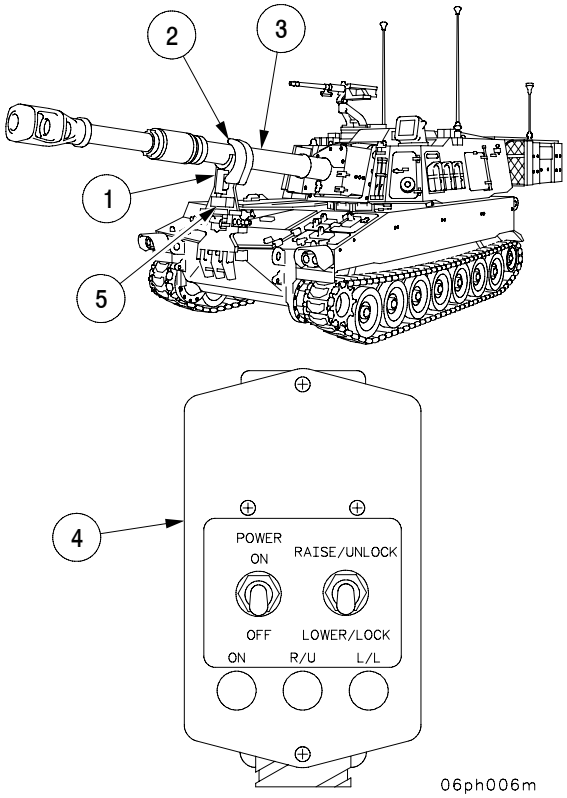 <br><br>Check travel lock (1) to ensure that jaw (2) is fully clamped and properly positioned on gun tube (3). Check electrical connections at travel lock control box (4) and travel lock actuator (5). Tighten connectors if necessary. Check travel lock for proper operation:<br>**CAUTION**<br>During icing conditions, ensure that travel lock is not frozen in position before attempting to move it.<br>Check operation in power mode (para 2-8.19.1).<br>If travel lock does not operate in power mode, check operation in manual mode (para 2-8.19.2). | Gun tube cannot be secured or released (by manual mode). |

## TABLE 2-1. PREVENTIVE MAINTENANCE CHECKS AND SERVICES FOR HOWITZER, SELF-PROPELLED, M109A6 - CONTINUED

| Item No. | Interval | Location / Item To Check/Service | Crewmember Procedures | Not Fully Mission Capable If: |
|---|---|---|---|---|
| 5 | Before | Cooling System | Driver<br><br>**WARNING**<br><br>Do not remove radiator cap while engine is hot. Hot coolant can cause injury.<br><br> 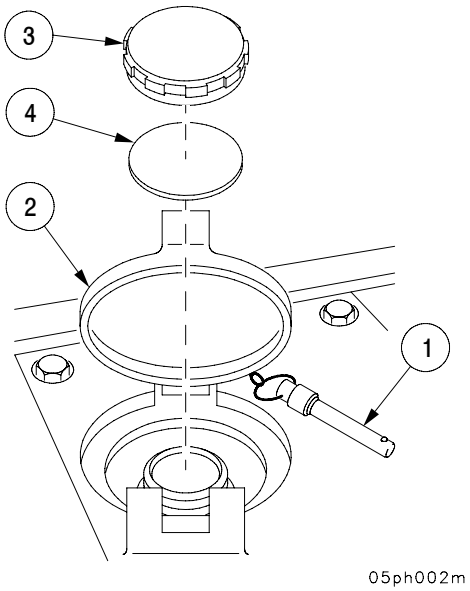 <br><br><br>Remove quick-release pin (1), open access cover (2), and remove radiator cap (3).<br><br>Check radiator coolant level; fluid should be at the filler neck top. Check for serviceability of radiator cap (3), gasket (4), and quick-release pin (1). If coolant level is low, fill to proper level (para 3-7.1). | Cap is missing. |

## TABLE 2-1. PREVENTIVE MAINTENANCE CHECKS AND SERVICES FOR HOWITZER, SELF-PROPELLED, M109A6 - CONTINUED

| Item No. | Interval | Location / Item To Check/Service | Crewmember Procedures | Not Fully Mission Capable If: |
|---|---|---|---|---|
| 6 | Deleted | | | |

## TABLE 2-1. PREVENTIVE MAINTENANCE CHECKS AND SERVICES FOR HOWITZER, SELF-PROPELLED, M109A6 - CONTINUED

| Item No. | Interval | Location / Item To Check/Service | Crewmember Procedures | Not Fully Mission Capable If: |
|---|---|---|---|---|
| 7 | Before | Engine Oil Level | **NOTE**<br>Check engine oil level with vehicle parked on level ground, if possible.<br><br>Driver<br>Oil level will take approximately 20 minutes to stabilize in engine crankcase. After 20 minutes, check to see that oil level is not below full marks. If required, add oil (Appx I). | |

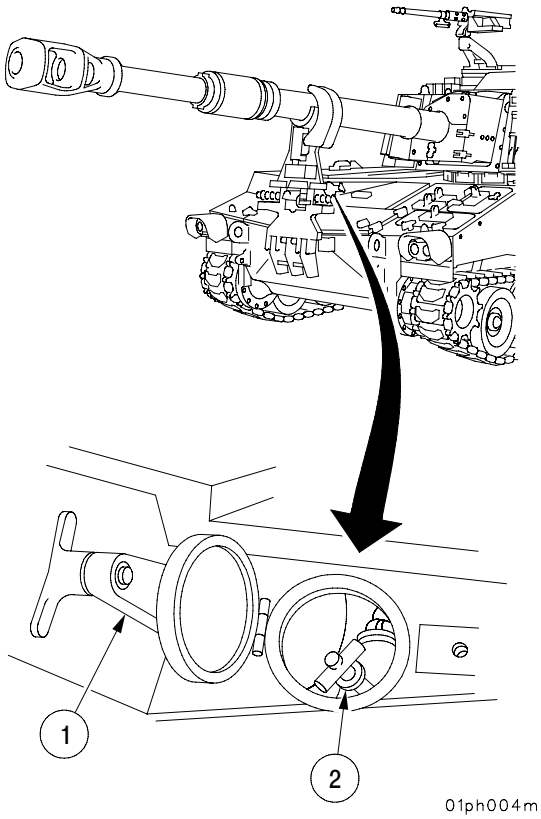

## TABLE 2-1. PREVENTIVE MAINTENANCE CHECKS AND SERVICES FOR HOWITZER, SELF-PROPELLED, M109A6 - CONTINUED

| Item No. | Interval | Location / Item To Check/Service | Crewmember Procedures | Not Fully Mission Capable If: |
|---|---|---|---|---|
| 13 | Before | Instruments and Gages | **NOTE**<br>Engine may take longer to warm up depending on local climate conditions.<br>Driver<br>Start engine per starting instructions (para 2-8.2). Check instruments and lights for normal indication.<br>a. Engine water temperature gage (1): 170° - 185°F is normal.<br>**NOTE**<br>Notify unit maintenance if operating outside of normal range.<br>b. Engine oil pressure gage (2): Minimum of 5 psi at idle (650 rpms), 30-50 psi is normal at 1800 rpms, and 50-70 psi at 2100 rpm (maximum is 70 psi).<br>c. Transmission oil temperature gage (3): 220°F-240°F is normal. Transmission oil temperature may not reach normal operating range while idling.<br>d. Transmission oil pressure gage (4): 10-45 psi is normal.<br> 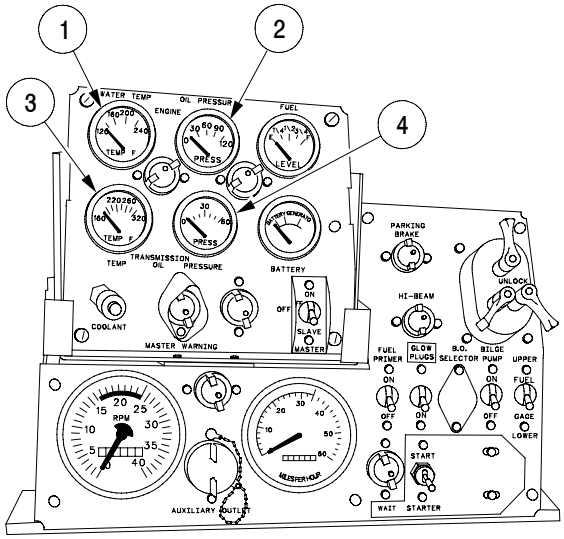 <br> | Any one of the gages 1 thru 6, or 8 is missing or not working. |

## TABLE 2-1. PREVENTIVE MAINTENANCE CHECKS AND SERVICES FOR HOWITZER, SELF-PROPELLED, M109A6 - CONTINUED

| Item No. | Interval | Location<br>Item To Check/Service | Crewmember Procedures | Not Fully Mission Capable If: |
|---|---|---|---|---|
| 13 Cont | Before | Instruments and Gages | e. Battery-generator indicator gage (5): green zone (charging).<br>f. Tachometer (6): should operate without excessive fluctuation or unusual noises.<br>g. Low coolant level indicator (7): Press-to-test for proper operation.<br>h. Fuel gage (8): indicates fuel quantity available in either tank. Use panel switch (9) to select tank.<br>i. Master warning indicator lamp (10): Be sure lamp goes off within 15 seconds after engine starts.<br>j. Master indicator light (11): is illuminated when MASTER switch is ON.<br>k. Glow plug WAIT lamp (12): is illuminated by GLOW PLUG switch and controller (para 2-8.2). | Any one of the lights (7) or (11) missing or not working.<br>Indicator lamp (10) stays on more than 15 seconds after engine starts. |

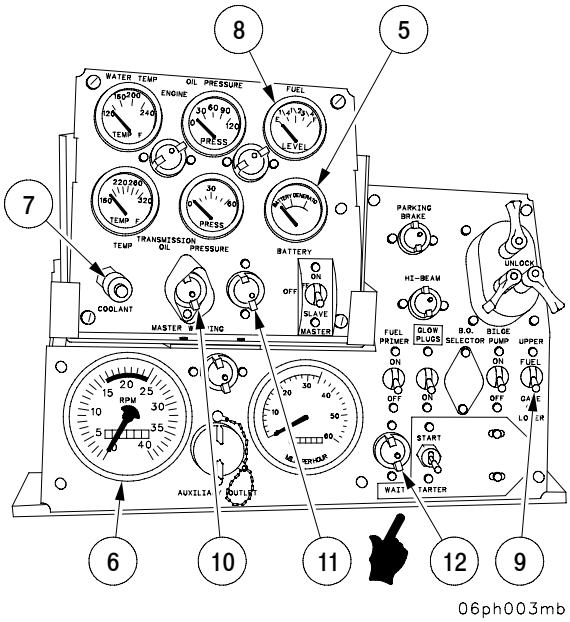

## TABLE 2-1. PREVENTIVE MAINTENANCE CHECKS AND SERVICES FOR HOWITZER, SELF-PROPELLED, M109A6 - CONTINUED

| Item No. | Interval | Location<br>Item To Check/Service | Crewmember<br>Procedures | Not Fully Mission Capable If: |
|---|---|---|---|---|
| | | | **WARNING**<br>Before operating vehicle, make sure all personnel are a safe distance from vehicle. | |
| 14 | Before | Steering Wheel | Driver<br>Turn steering wheel from left to right and feel for binding or looseness. | Any binding or looseness. |
| 15 | Before | Brakes | Driver<br>Move vehicle about 2 feet (0.61 m) and check brakes for proper operation. | Brakes bind or do not stop vehicle. Pedal sticks. |
| 16 | Before | Parking Brakes | Driver<br>Check for proper operation of parking brake (1) using manual control handle.<br> 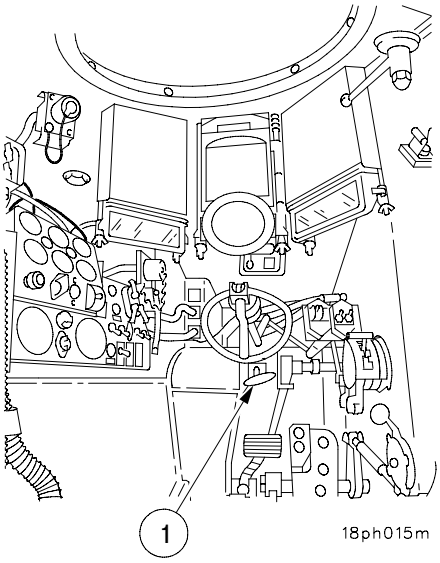 <br> | Parking brake does not hold. |
| 17 | Before | DA Form 2408-4 | Chief of Section<br>Check DA Form 2408-4 to ensure that cannon has been borescoped within the last 180 days or EFC rounds have not exceeded 2650. | Not borescoped within last 180 days or EFC rounds exceeds 2650. |

## TABLE 2-1. PREVENTIVE MAINTENANCE CHECKS AND SERVICES FOR HOWITZER, SELF-PROPELLED, M109A6 - CONTINUED

| Item No. | Interval | Location / Item To Check/Service | Crewmember Procedures | Not Fully Mission Capable If: |
|---|---|---|---|---|
| 13 | Before | Instruments and Gages | **NOTE**<br>Engine may take longer to warm up depending on local climate conditions.<br>Driver<br>Start engine per starting instructions (para 2-8.2). Check instruments and lights for normal indication.<br>a. Engine water temperature gage (1): 170° - 185°F is normal.<br>**NOTE**<br>Notify unit maintenance if operating outside of normal range.<br>b. Engine oil pressure gage (2): Minimum of 5 psi at idle (650 rpms), 30-50 psi is normal at 1800 rpms, and 50-70 psi at 2100 rpm (maximum is 70 psi).<br>c. Transmission oil temperature gage (3): 220°F-240°F is normal. Transmission oil temperature may not reach normal operating range while idling.<br>d. Transmission oil pressure gage (4): 10-45 psi is normal.<br> 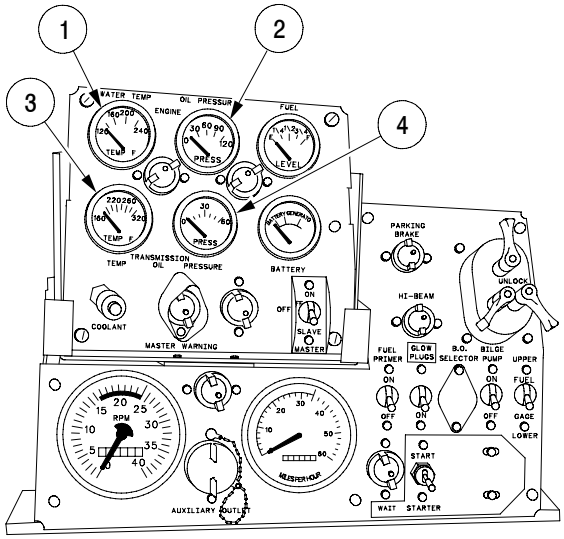 <br> | Any one of the gages 1 thru 6, or 8 is missing or not working. |

## TABLE 2-1. PREVENTIVE MAINTENANCE CHECKS AND SERVICES FOR HOWITZER, SELF-PROPELLED, M109A6 - CONTINUED

| Item No. | Interval | Location<br>Item To Check/Service | Crewmember Procedures | Not Fully Mission Capable If: |
|---|---|---|---|---|
| 13 Cont | Before | Instruments and Gages | e. Battery-generator indicator gage (5): green zone (charging).<br>f. Tachometer (6): should operate without excessive fluctuation or unusual noises.<br>g. Low coolant level indicator (7): Press-to-test for proper operation.<br>h. Fuel gage (8): indicates fuel quantity available in either tank. Use panel switch (9) to select tank.<br>i. Master warning indicator lamp (10): Be sure lamp goes off within 15 seconds after engine starts.<br>j. Master indicator light (11): is illuminated when MASTER switch is ON.<br>k. Glow plug WAIT lamp (12): is illuminated by GLOW PLUG switch and controller (para 2-8.2). | Any one of the lights (7) or (11) missing or not working.<br>Indicator lamp (10) stays on more than 15 seconds after engine starts. |

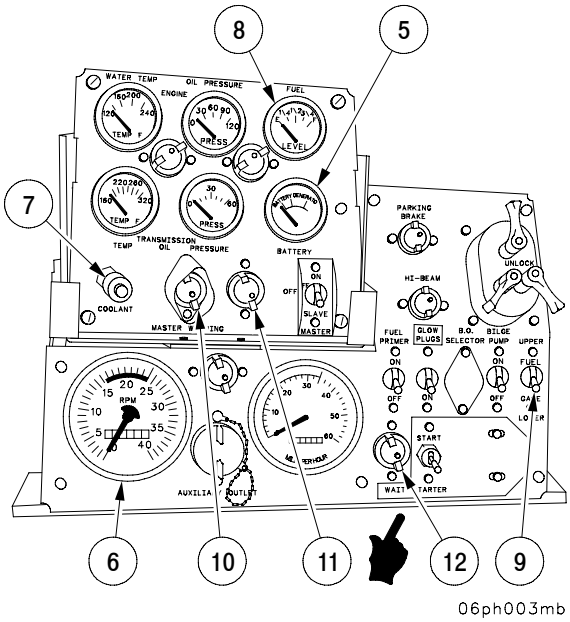

## TABLE 2-1. PREVENTIVE MAINTENANCE CHECKS AND SERVICES FOR HOWITZER, SELF-PROPELLED, M109A6 - CONTINUED

| Item No. | Interval | Location<br>Item To Check/Service | Crewmember<br>Procedures | Not Fully Mission Capable If: |
|---|---|---|---|---|
| | | | **WARNING**<br>Before operating vehicle, make sure all personnel are a safe distance from vehicle. | |
| 14 | Before | Steering Wheel | Driver<br>Turn steering wheel from left to right and feel for binding or looseness. | Any binding or looseness. |
| 15 | Before | Brakes | Driver<br>Move vehicle about 2 feet (0.61 m) and check brakes for proper operation. | Brakes bind or do not stop vehicle. Pedal sticks. |
| 16 | Before | Parking Brakes | Driver<br>Check for proper operation of parking brake (1) using manual control handle.<br> 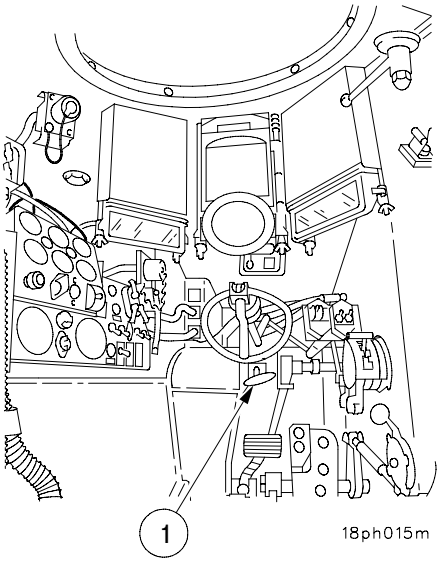 <br> | Parking brake does not hold. |
| 17 | Before | DA Form 2408-4 | Chief of Section<br>Check DA Form 2408-4 to ensure that cannon has been borescoped within the last 180 days or EFC rounds have not exceeded 2650. | Not borescoped within last 180 days or EFC rounds exceeds 2650. |

## TABLE 2-1. PREVENTIVE MAINTENANCE CHECKS AND SERVICES FOR HOWITZER, SELF-PROPELLED, M109A6 - CONTINUED

| Item No. | Interval | Location / Item To Check/Service | Crewmember Procedures | Not Fully Mission Capable If: |
|---|---|---|---|---|
| 18 | Before | CAB / Recuperator | Chief of Section<br><br>**WARNING**<br><br>Do not attempt to remove plug completely. Oil in recuperator is under high pressure.<br><br>**CAUTION**<br><br>• If plug is loosened for draining fluid, check for leaks after tightening cover.<br>• To prevent damage to gasket or cover, loosen screws before rotating cover.<br>• To prevent damage to cover and to keep dirt out of recuperator, rotate cover closed after checking guide pins, and tighten screws.<br><br>**NOTE**<br><br>During firing, seepage of hydraulic oil from recuperator is normal.<br><br>Before firing, loosen screws (1) and rotate cover (2). Check pins (3) in recuperator (4) from outside of vehicle, and check pins (5) in recuperator head (6) from inside vehicle. Pins must extend from 1/4 to 3/4 in. (0.635 to 1.905 cm). If pins extend beyond 3/4 in. (1.905 cm), fill recuperator (4) by removing cap (7) from valve (8). Add hydraulic fluid (OHT) per Appendix I until pins extend 1/4 in. (0.635 cm). If pins extend less than 1/4 in. (0.635 cm), loosen plug (9) and drain fluid until pins (5) extend 1/4 in. (0.635 cm). Rotate cover (2) closed and tighten screws (1).<br><br> 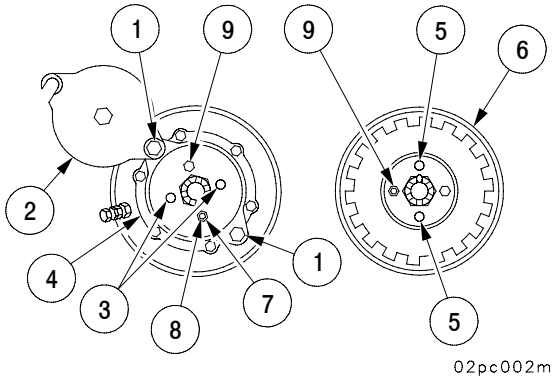 <br> | Pins cannot be brought into specified range. |

## TABLE 2-1. PREVENTIVE MAINTENANCE CHECKS AND SERVICES FOR HOWITZER, SELF-PROPELLED, M109A6 - CONTINUED

| Item No. | Interval | Location / Item To Check/Service | Crewmember Procedures | Not Fully Mission Capable If: |
|---|---|---|---|---|
| 19 | Before | AFCS/PDFCS<br>Backup Battery Boxes | Chief of Section<br>Check boxes for corrosion and damage. If leaking, notify unit maintenance right away.<br> 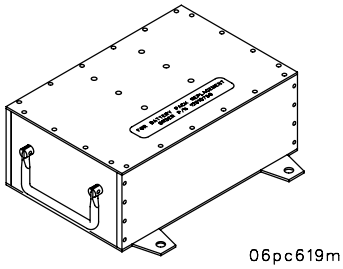 <br>06pc619m | There is any evidence of a battery leak. |
| 20 | Before | AFCS Power Conditioner Unit (PCU) | Chief of Section<br>a. Place vehicle MASTER switch ON.<br>b. Check that VEH PWR light (1) is lit on PCU.<br>c. If not, check that all circuit breakers (2) are in ON position (on PCU).<br>d. If not, attempt to place circuit breakers (2) ON. If unable, notify unit maintenance.<br> 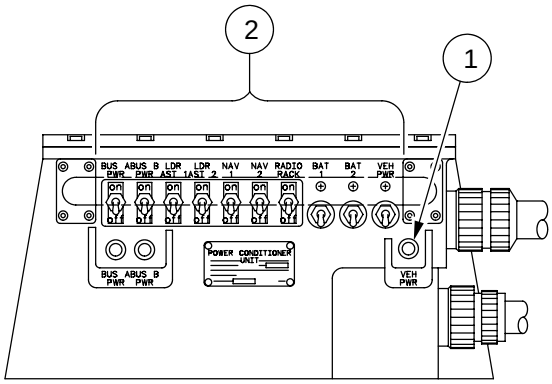 <br><br>06pc005m | VEH PWR light is not lit. |

## TABLE 2-1. PREVENTIVE MAINTENANCE CHECKS AND SERVICES FOR HOWITZER, SELF-PROPELLED, M109A6 - CONTINUED

| Item No. | Interval | Location / Item To Check/Service | Crewmember Procedures | Not Fully Mission Capable If: |
|---|---|---|---|---|
| 20.1 | Before | PDFCS Power Conditioner Unit (PCU-2) | Chief of Section<br>a. Place vehicle MASTER switch ON.<br>b. Check that VEH PWR light (1) is lit on PCU-2.<br>c. If not, check that all circuit breakers (2) are in ON position (on PCU-2).<br>d. If not, attempt to place circuit breakers (2) ON. If unable, notify unit maintenance.<br> 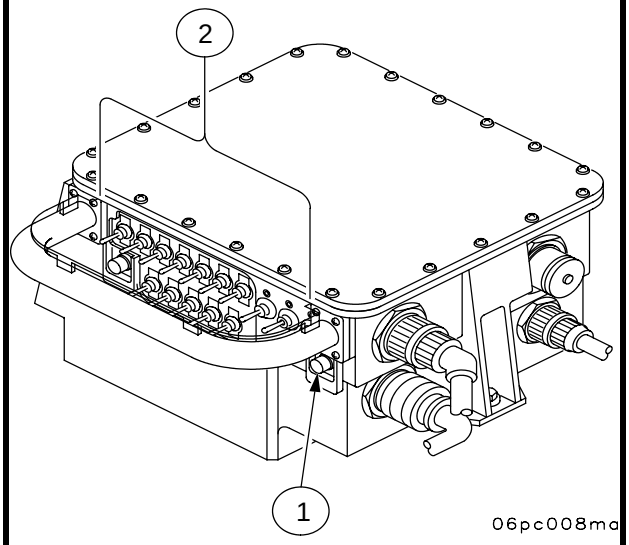 <br> | VEH PWR light is not lit. |

## TABLE 2-1. PREVENTIVE MAINTENANCE CHECKS AND SERVICES FOR HOWITZER, SELF-PROPELLED, M109A6 - CONTINUED

| Item No. | Interval | Location / Item To Check/Service | Crewmember Procedures | Not Fully Mission Capable If: |
|---|---|---|---|---|
| 21 | Before | AFCS Self-Test | Chief of Section<br>**WARNING**<br>When inspecting or working with the AFCS or PDFCS DU, if screens appear to be cracked or broken or you suspect that mercury is escaping or has escaped, avoid breathing the vapors, avoid contact with eyes, skin or clothes and exit vehicle as fast as possible. Upon exiting the vehicle, immediately contact proper authorities so that spillage can be removed. Failure to comply could result in personnel injury from mercury exposure.<br>a. Inspect DU (1) screen for cracks, breaks or any indication of leaking mercury. | DU screen is cracked broken or any indication of leaking mercury. |

## TABLE 2-1. PREVENTIVE MAINTENANCE CHECKS AND SERVICES FOR HOWITZER, SELF-PROPELLED, M109A6 - CONTINUED

| Item No. | Interval | Location<br>Item To Check/Service | Crewmember Procedures | Not Fully Mission Capable If: |
|---|---|---|---|---|
| 21<br>(cont) | Before | AFCS Self-Test | Chief of Section<br>b. Place vehicle MASTER switch ON.<br>c. Ensure PCU switches are ON.<br>d. Power up DU (1) and monitor self-test on display panel (2) (para 2-12.1.1). Check FAULT indicator lamp (3). If it does not go off after all checks are completed, read EL panel (2) for indicated fault and perform following:<br>(1) Check that power green lamps are lit on all AFCS LRUs.<br>(2) Verify that AFCS harness connections are tight. Hand tighten if necessary.<br>e. Turn vehicle MASTER switch OFF.<br>f. Ensure warning message ON AUX POWER START VEHICLE, ACK appears on DU as this indicates backup batteries are operational.<br>g. Turn vehicle MASTER switch back ON.<br>h. Ensure warning message VEHICLE AND AUX POWER OK, appears on DU as this indicates vehicle power is operational.<br> 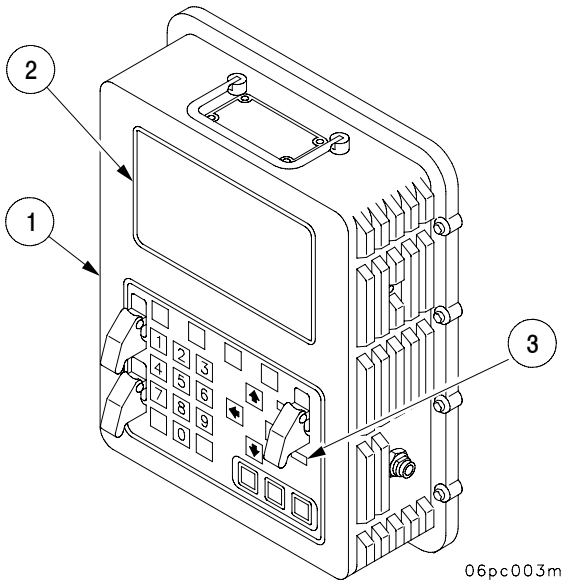 <br> | AFCS will not power up.<br>AFCS shuts down when vehicle MASTER power switch is turned OFF.<br>Power-up status screen shows any of the following as out:<br>DCU<br>COMMO<br>NAV<br>WPN<br>1553<br>PCU |

## TABLE 2-1. PREVENTIVE MAINTENANCE CHECKS AND SERVICES FOR HOWITZER, SELF-PROPELLED, M109A6 - CONTINUED

| Item No. | Interval | Location<br>Item To Check/Service | Crewmember<br>Procedures | Not Fully Mission Capable If: |
|---|---|---|---|---|
| 21.1 | Before | PDFCS Self-Test | Chief of Section<br>**WARNING**<br>When inspecting or working with the AFCS or PDFCS DU, if screens appear to be cracked or broken or you suspect that mercury is escaping or has escaped, avoid breathing the vapors, avoid contact with eyes, skin or clothes and exit vehicle as fast as possible. Upon exiting the vehicle, immediately contact proper authorities so that spillage can be removed. Failure to comply could result in personnel injury from mercury exposure.<br>a. Inspect PDU screen (1) for cracks, breaks or any indication of leaking mercury. | PDU screen is cracked broken or any indication of leaking mercury. |

## TABLE 2-1. PREVENTIVE MAINTENANCE CHECKS AND SERVICES FOR HOWITZER, SELF-PROPELLED, M109A6 - CONTINUED

| Item No. | Interval | Location / Item To Check/Service | Crewmember Procedures | Not Fully Mission Capable If: |
|---|---|---|---|---|
| 21.1 (cont) | Before | PDFCS Self-Test | Chief of Section<br>b. Place vehicle MASTER switch ON.<br>c. Ensure PCU-2 switches are ON.<br>d. Power up PDFCS (2) and monitor self-test on PDU (3) (para 2-15B.1). Check FAULT indicator lamp (4). If it does not go off after all checks are completed, read PDU (3) for indicated fault and perform following:<br>(1) Check that power green lamps are lit on all PDFCS LRUs.<br>(2) Verify that PDFCS harness connections are tight. Hand tighten if necessary. | PDFCS will not power up. |
| | | | e. Turn vehicle MASTER switch OFF.<br>f. Ensure warning message ON AUX POWER START VEHICLE, ACK appears on PDU as this indicates backup batteries are operational.<br>g. Turn vehicle MASTER switch back ON.<br>h. Ensure warning message VEHICLE AND AUX POWER OK, ACK appears on PDU as this indicates vehicle power is operational. | PDFCS shuts down when vehicle MASTER power switch is turned OFF.<br>PDFCS status screen shows any of the following as out:<br>PDCU<br>NAV<br>WPN<br>PCU-2<br>Keypad<br>TCIM |

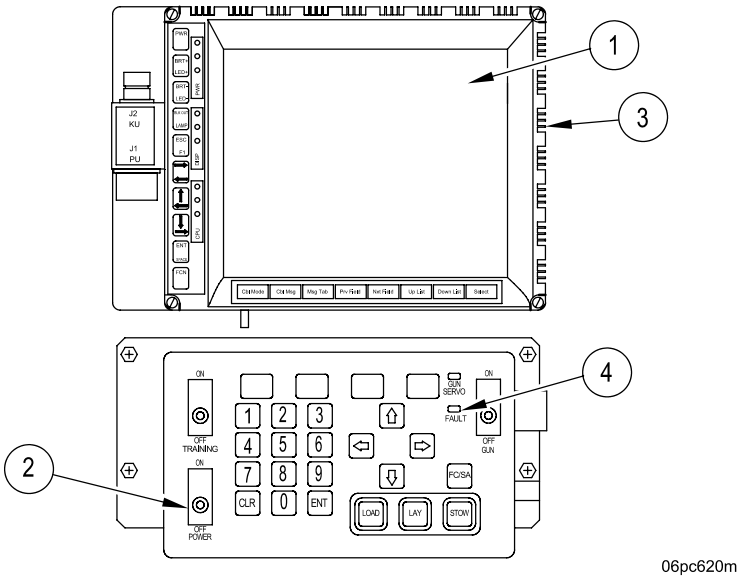

## TABLE 2-1. PREVENTIVE MAINTENANCE CHECKS AND SERVICES FOR HOWITZER, SELF-PROPELLED, M109A6 - CONTINUED

| Item No. | Interval | Location / Item To Check/Service | Crewmember Procedures | Not Fully Mission Capable If: |
|---|---|---|---|---|
| 22 | Before | Intercommunication Systems | Chief of Section<br>Check all headsets, controls, and indicators for proper operation (para 2-22.4). | COS or Driver intercom OUT. |
| 23 | Before | Communication Equipment | Chief of Section<br>Check radio equipment for proper operation and damage. See TM 11-5820-890-10, TM 11-5820-890-10-1, or TM 11-5820-890-10-2. | If both radios are non-operational. |
| 24 | Before | Crew Compartment Warning Light | Chief of Section<br>**NOTE**<br>When warning light comes on during operation, it indicates a problem. Light will normally come on when MASTER switch is turned ON and engine is not running.<br>Check that warning light (1) does not stay on when engine is running.<br>Press-to-test warning light. Notify unit maintenance if light does not illuminate.<br> 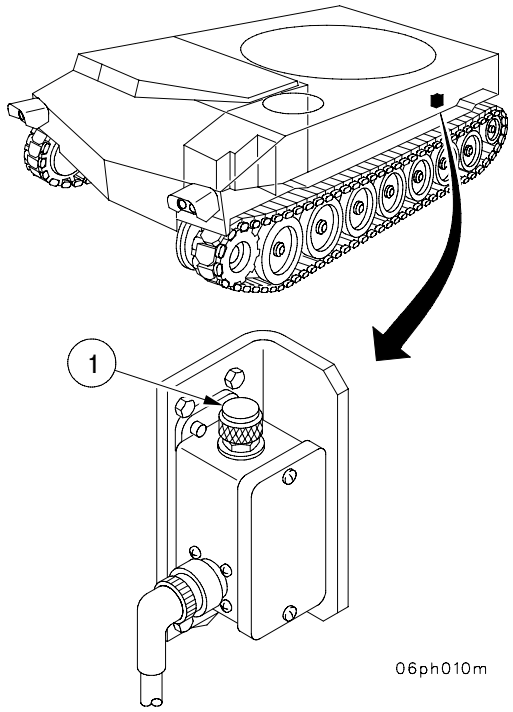 | |

## TABLE 2-1. PREVENTIVE MAINTENANCE CHECKS AND SERVICES FOR HOWITZER, SELF-PROPELLED, M109A6 - CONTINUED

| Item No. | Interval | Location / Item To Check/Service | Crewmember Procedures | Not Fully Mission Capable If: |
|---|---|---|---|---|
| 25 | Before | CAB / Hydraulic Components | Gunner<br>**CAUTION**<br>Ensure that hydraulic system pressure is reduced to 0 psi (0 kPa) before making this check.<br>Open hydraulic compartment access door outside of cab.<br>a. Inspect hydraulic lines, hoses, and connections for leaks.<br>b. Check oil level sight plug (1) on hydraulic reservoir. If oil is not visible, check IAW para 3, Appx I. Add fluid if required (para 3-8.11).<br>c. Remove dust cap (2) from hydraulic reservoir and check for hydraulic oil leaking from hydraulic bellows assembly.<br>d. Check electrical connections for loose wires and corrosion. Clean and tighten if necessary.<br>Close hydraulic compartment access door.<br> 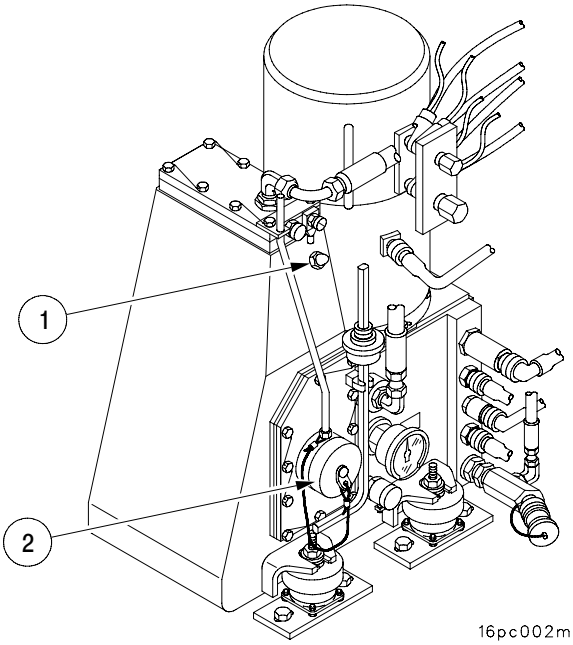 | <br><br><br><br><br>Fluid loss of over 3 quarts (2.8 l) in a 24-hour period.<br>Any Class III leak found. |

## TABLE 2-1. PREVENTIVE MAINTENANCE CHECKS AND SERVICES FOR HOWITZER, SELF-PROPELLED, M109A6 - CONTINUED

| Item No. | Interval | Location / Item To Check/Service | Crewmember Procedures | Not Fully Mission Capable If: |
|---|---|---|---|---|
| 26 | Before | Pulse Accumulator | Gunner<br>a. Park vehicle on level ground, if possible.<br>b. Place gun tube in stowed position.<br>c. Turn vehicle MASTER switch ON.<br>d. Start engine and idle at 1000 rpm.<br>e. Turn HYDRAULIC POWER switch ON, and allow hydraulic system to operate for three minutes.<br>f. Pull valve (1) open and release.<br>g. Read hydraulic system pressure gage (2). Needle will move from zero on hydraulic system pressure gage (2) and stop at 1925 ± 50 psi.<br>h. Turn HYDRAULIC POWER switch OFF.<br>i. Move COS control handle left or right and release control handle.<br>j. Pull valve (1) open and release.<br>k. Observe that hydraulic system pressure gage (2) needle drops to 900 ± 50 psi.<br>l. Move COS control handle left or right and release control handle.<br>m. Pull valve (1) open and release.<br>n. Hydraulic system pressure gage (2) will read zero pressure.<br>If hydraulic system pressure does not drop to zero at 900 ± 50 psi, notify unit maintenance. | Hydraulic pressure gage is inoperative |

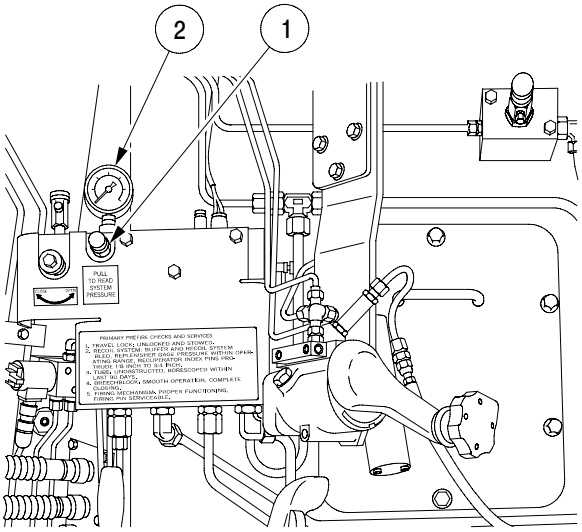

## TABLE 2-1. PREVENTIVE MAINTENANCE CHECKS AND SERVICES FOR HOWITZER, SELF-PROPELLED, M109A6 - CONTINUED

| Item No. | Interval | Location / Item To Check/Service | Crewmember Procedures | Not Fully Mission Capable If: |
|---|---|---|---|---|
| 27 | Before | Fixed Fire Extinguisher System | Gunner<br>a. Make sure bottle holddown brackets (1) are properly latched.<br>b. Check distribution lines (2) for loose fittings, tight mountings, and cracks.<br> 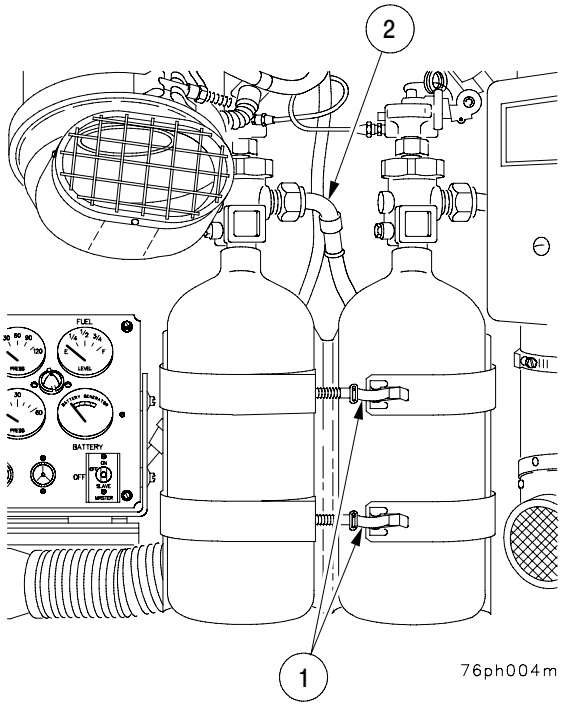 <br> | Distribution lines loose, cracked, or not mounted tightly. |
| | | | c. Check for presence of fire extinguisher record tag, and that form indicates that the bottles have been weighed IAW unit SOP. | Bottles have not been weighed IAW unit SOP. |

## TABLE 2-1. PREVENTIVE MAINTENANCE CHECKS AND SERVICES FOR HOWITZER, SELF-PROPELLED, M109A6 - CONTINUED

| Item No. | Interval | Location<br>Item To Check/Service | Crewmember<br>Procedures | Not Fully Mission Capable If: |
|---|---|---|---|---|
| 28 | Before | Portable Fire Extinguisher | Gunner<br>Check two portable fire extinguishers in crew compartment to determine that they are properly sealed and mounted securely.<br> 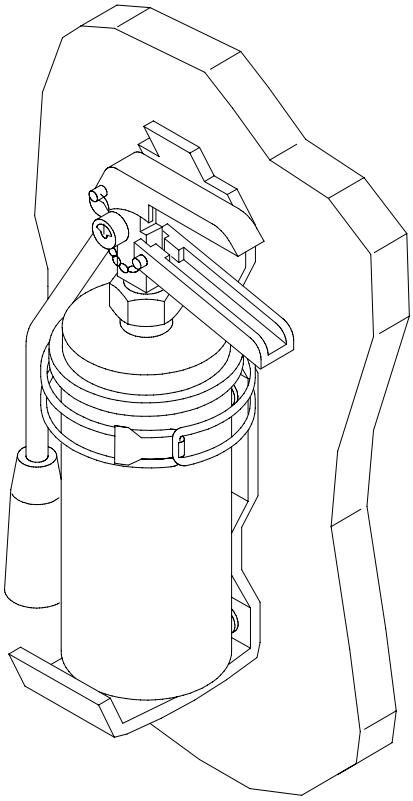 <br>76ph003m | Either fire extinguisher is missing, pressure gage in red zone and/or lead wire seals are missing or broken. |

## TABLE 2-1. PREVENTIVE MAINTENANCE CHECKS AND SERVICES FOR HOWITZER, SELF-PROPELLED, M109A6 - CONTINUED

| Item No. | Interval | Location / Item To Check/Service | Crewmember Procedures | Not Fully Mission Capable If: |
|---|---|---|---|---|
| 29 | Before | Microclimate Conditioning System | Gunner<br>**NOTE**<br>The MCS should not be operated in the COOL mode if the outside temperature is below 40 degrees. In colder weather the Freon light may come on when the MASTER switch is turned ON. This is due to the reduced pressure of the Freon gas.<br>a. Turn vehicle MASTER switch ON.<br>b. Start engine.<br>c. Press LAMP TEST button (1) and observe CHANGE FILTER and FREON Pressure warning indicator lamps (2).<br>d. If lamps (2) do not light, notify unit maintenance.<br>**CAUTION**<br>Whenever MCS or driver's station is not in use, ensure that driver's /cab quick-disconnect coupling is disconnected, the cap installed on the coupling, and the flex hose properly secured in the hook and loop fastener provided in the hull.<br>e. Turn mode selector (3) to LOW AIR position and check for air flow.<br>f. Change mode selector (3) from LOW AIR position to HIGH AIR position and check for increased air flow.<br>g. Place mode selector (3) in the COOL mode and let the unit operate for 5-10 minutes. Check for cool air flow.<br>h. Check all hoses and ducts for tears, cracks, or damage. | |

## TABLE 2-1. PREVENTIVE MAINTENANCE CHECKS AND SERVICES FOR HOWITZER, SELF-PROPELLED, M109A6 - CONTINUED

| Item No. | Interval | Location / Item To Check/Service | Crewmember Procedures | Not Fully Mission Capable If: |
|---|---|---|---|---|
| 30 | Deleted | | 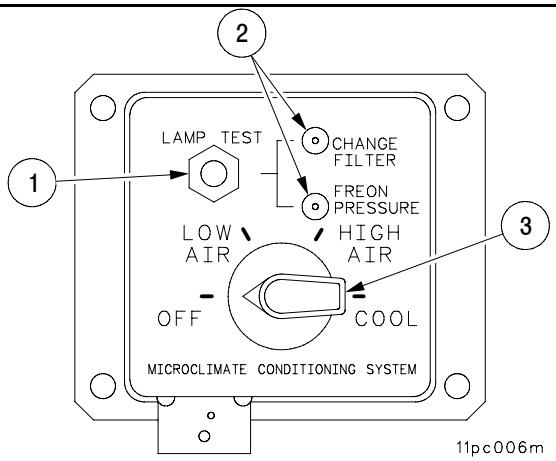 | |

## TABLE 2-1. PREVENTIVE MAINTENANCE CHECKS AND SERVICES FOR HOWITZER, SELF-PROPELLED, M109A6 - CONTINUED

| Item No. | Interval | Location<br>Item To Check/Service | Crewmember<br>Procedures | Not Fully Mission Capable If: |
|---|---|---|---|---|
| 30 (Cont) | Deleted | | | |
| 31 | Before | Replenisher System Pressure | Gunner<br>**NOTE**<br>Gage pressure may increase during normal firing due to heat expansion of fluid in mount and replenisher. The safe-to-fire pressure range is 17-50 psi.<br>Bleed air from recoil system before firing (para 3-8.6). Check that replenisher pressure gage shows a pressure of 17-24 psi. If indicated pressure is above 24 psi, bleed pressure (para 3-8.6). If the indicated pressure is between 9 and 16 psi, add hydraulic fluid through the roof mounted fill valve (Appendix I) on the replenisher gage manifold. If the indicated pressure is below 9 psi, notify unit maintenance.<br> 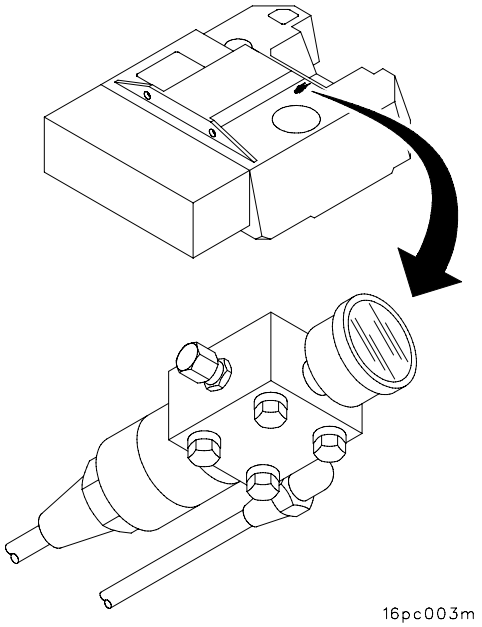 <br> | If pressure on gage is below 17 psi or above 50 psi. |

## TABLE 2-1. PREVENTIVE MAINTENANCE CHECKS AND SERVICES FOR HOWITZER, SELF-PROPELLED, M109A6 - CONTINUED

| Item No. | Interval | Location / Item To Check/Service | Crewmember Procedures | Not Fully Mission Capable If: |
|---|---|---|---|---|
| 32 | Before | Telescope Mount, M145A1 | Gunner<br>Make sure handwheel (1) and all knobs (2) are undamaged and that they move freely. Make sure level vials (3) are legible, that glass is free of breaks, that vial mirrors are not scratched, and that vial covers move freely. Make sure lamps illuminate vials. Inspect counters (4), making sure that viewing windows are not broken, that numbers move freely and read accurately. Make sure mounting is secure.<br> 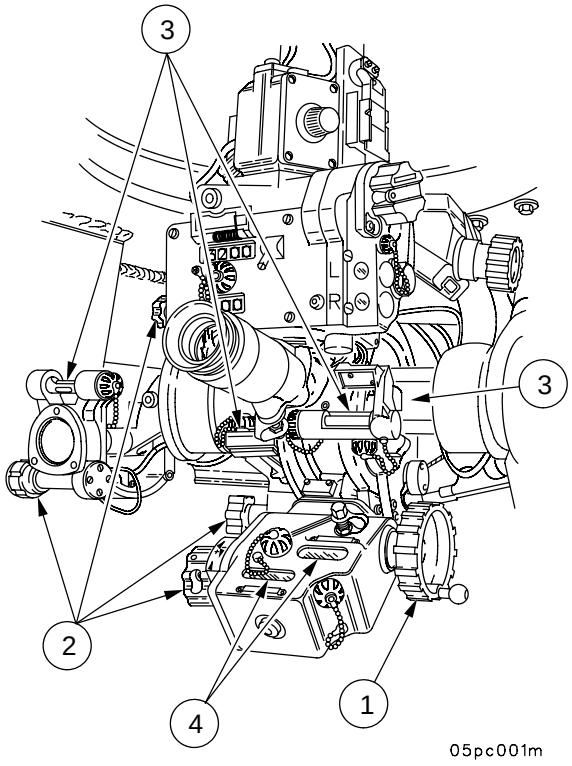 <br> | Counters and knobs do not work properly. Vials are broken, or mirrors scratched, and AFCS/PDFCS, DCU, PDC or NAV subsystems unavailable. |

## TABLE 2-1. PREVENTIVE MAINTENANCE CHECKS AND SERVICES FOR HOWITZER, SELF-PROPELLED, M109A6 - CONTINUED

| Item No. | Interval | Location<br>Item To Check/Service | Crewmember<br>Procedures | Not Fully Mission Capable If: |
|---|---|---|---|---|
| 33 | Before | Panoramic Telescope, M117A2 | Gunner<br>Check field of view through reticle for entrapped moisture and optical defects. Make sure eyeshield (1) is free from deterioration, cuts, or tears. Check that all external surfaces of telescope are free of dents, cracks, rust, or corrosion. Check all knobs (2) for damage and freedom of movement. Make sure mountings are secure.Check counters (3) to make sure that viewing windows are not broken and that numbers are legible and do not skip. Check that rheostat (4) knob moves freely and that light gradually goes from dim to bright and bright to dim.Check for moisture or fungus within field of view.<br> 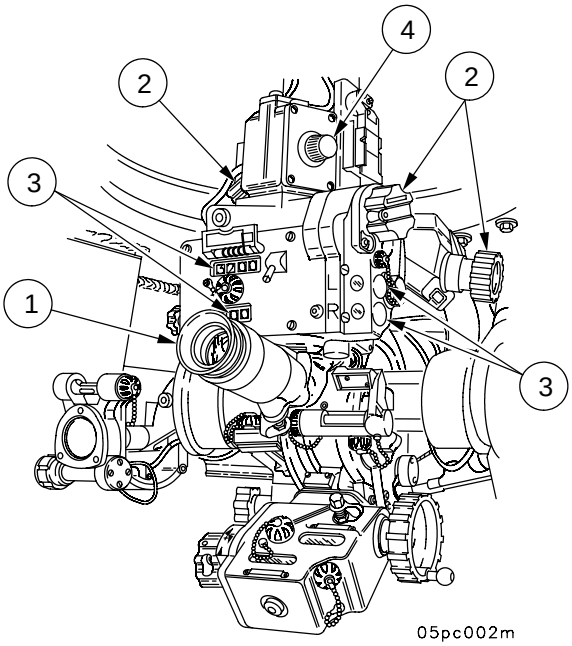 <br> | Loose or defective parts prevent proper operation, knobs do not turn, counters skip, mountings insecure and AFCS/PDFCS, DCU, PDC or NAV subsystems unavailable. |

## TABLE 2-1. PREVENTIVE MAINTENANCE CHECKS AND SERVICES FOR HOWITZER, SELF-PROPELLED, M109A6 - CONTINUED

| Item No. | Interval | Location<br>Item To Check/Service | Crewmember<br>Procedures | Not Fully Mission Capable If: |
|---|---|---|---|---|
| 34 | Before | Alignment Device M140/M140A1 | Gunner<br>**WARNING**<br>**RADIATION** 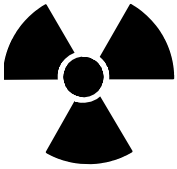 **HAZARD**<br>**TRITIUM GAS (H3)**<br>The M140 alignment device is radioactively illuminated. Check for presence of illumination in a low-light environment. If illumination is not present, notify local radiation safety officer. Do not attempt to repair.<br>Check alignment device (1) for illumination. Clean and stow.<br> 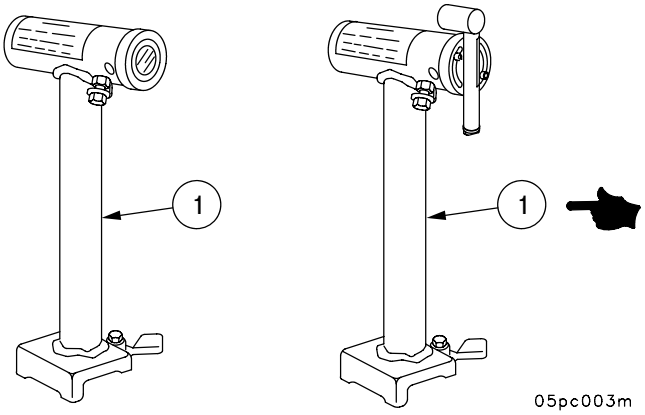 <br>M140 M140A1 | |

## TABLE 2-1. PREVENTIVE MAINTENANCE CHECKS AND SERVICES FOR HOWITZER, SELF-PROPELLED, M109A6 - CONTINUED

| Item No. | Interval | Location / Item To Check/Service | Crewmember Procedures | Not Fully Mission Capable If: |
|---|---|---|---|---|
| 35 | Before | Firing Pin and Retainer | Cannoneer<br>**NOTE**<br>Retainer is under pressure and will spring out if not restrained during removal.<br>a. With firing mechanism block (1) in center position, push firing mechanism (2) into block (1) and rotate clockwise to remove.<br>b. Pry out firing pin retainer (3) with screwdriver.<br>c. Remove firing pin (4) and firing pin spring (5).<br>d. Replace retainer (3) and firing pin (4), if broken, distorted, or kinked.<br>e. If spring (5) is broken or missing, notify unit maintenance.<br>f. If firing pin (4) does not “pop” out when retainer is removed, attempt to push out the firing pin. (If unsuccessful, notify unit maintenance.) Use spare, and turn over old pin to unit maintenance. Check firing pin cavity in block for burrs. Remove with crocus cloth (item 12, Appx D).<br> 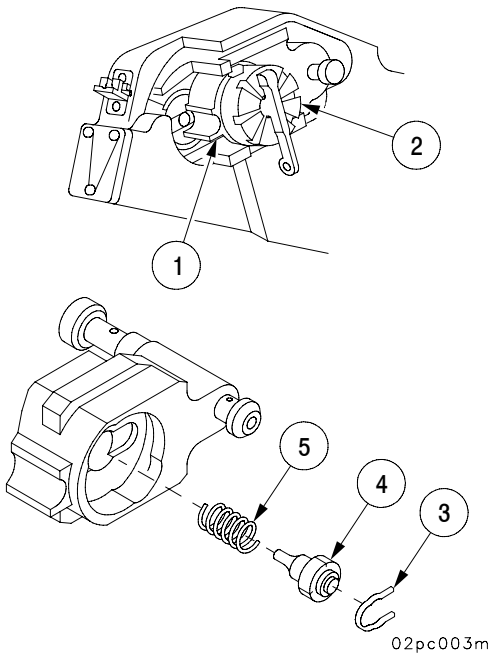 <br> | Retainer distorted or broken. Firing pin or spring is broken or missing. |

## TABLE 2-1. PREVENTIVE MAINTENANCE CHECKS AND SERVICES FOR HOWITZER, SELF-PROPELLED, M109A6 - CONTINUED

| Item No. | Interval | Location / Item To Check/Service | Crewmember Procedures | Not Fully Mission Capable If: |
|---|---|---|---|---|
| 36 | Before | Firing Mechanism, Firing Block Assembly, and Primer Chamber | Cannoneer<br>**CAUTION**<br>To avoid damage to firing pin, ensure that firing mechanism is in firing position (fully to left of housing) before testing it.<br>a. Attach lanyard to eyelet of firing mechanism lever.<br>b. Check operation of firing mechanism with a steady pull on the lanyard. You'll hear a click and firing mechanism should recock.<br>c. Check mating block (1) for proper operation.<br>d. Check primer chamber (2) for rust and powder fouling.<br>e. Clean chamber (2) by inserting reamer as far as it will go. Rotate briskly.<br>f. Clean and lubricate firing mechanism (3) (Appendix I).<br>g. Slide firing block (4) back and forth to check for smooth movement. If it binds, notify unit maintenance.<br> 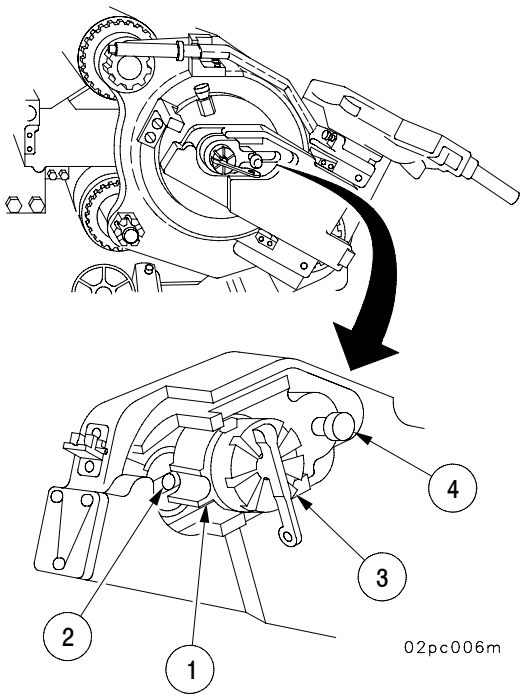 | Firing mechanism or follower assembly is unserviceable or missing. |

## TABLE 2-1. PREVENTIVE MAINTENANCE CHECKS AND SERVICES FOR HOWITZER, SELF-PROPELLED, M109A6 - CONTINUED

| Item No. | Interval | Location<br>Item To Check/Service | Crewmember<br>Procedures | Not Fully Mission Capable If: |
|---|---|---|---|---|
| 37 | Before | Operating Handle | Cannoneer<br>Inspect handle latch pin (1). If severely bent or cracked, notify unit maintenance.<br>Unit maintenance should also be notified for pin replacement at 750 rounds (as recorded on Weapons Data Card 2408-4).<br>Check locking wire securing catch (2) mounting bolts. If wire is broken or missing, notify unit maintenance.<br> 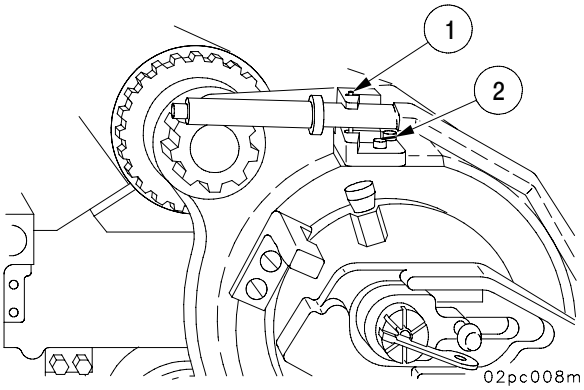 | Handle cannot be latched.<br>Locking wire broken or missing. |
| 38 | Before | Breech Opening Cam and Rollers | Cannoneer<br>Check rollers (1) for smooth operation. Check cam ways (2) for corrosion, nicks, or burrs. If required, remove corrosion with crocus cloth (item 12, Appx D). Remove nicks and burrs with a file. After cleaning/deburring, lubricate (Appendix I).<br> 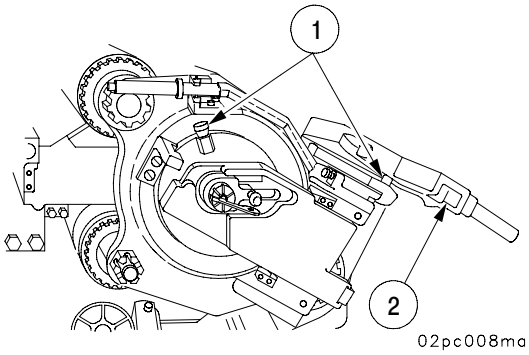 <br>Lubricate cam ways daily when cannon is fired (Appendix I). | Rollers are broken. |

## TABLE 2-1. PREVENTIVE MAINTENANCE CHECKS AND SERVICES FOR HOWITZER, SELF-PROPELLED, M109A6 - CONTINUED

| Item No. | Interval | Location<br>Item To Check/Service | Crewmember<br>Procedures | Not Fully Mission Capable If: |
|---|---|---|---|---|
| 39 | Before | Breechblock | Cannoneer<br><br>**WARNING**<br><br>Never forget to put operating handle back to stow position. If left down while closing breechblock, it can cause serious injury to personnel. Make it a practice never to let go of handle until you return it to stowed position.<br><br>**CAUTION**<br><br>To prevent damage to firing mechanism follower assembly, firing mechanism must be in firing position before you open breechblock manually.<br><br>Cannoneer<br>Before firing, open and close breechblock (1) to be sure it operates freely and smoothly. If breechblock or breechring threads (2) are burred and prevent smooth operation, notify unit maintenance. Lubricate breechblock threads and breechring (Appendix I).<br><br> 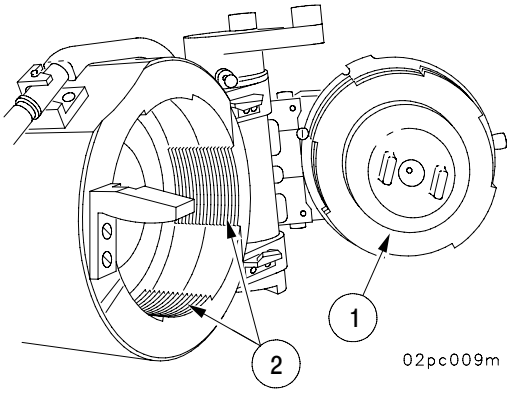 <br> | |

## TABLE 2-1. PREVENTIVE MAINTENANCE CHECKS AND SERVICES FOR HOWITZER, SELF-PROPELLED, M109A6 - CONTINUED

| Item No. | Interval | Location / Item To Check/Service | Crewmember Procedures | Not Fully Mission Capable If: |
|---|---|---|---|---|
| 39 Cont | Before | Breechblock | Cannoneer<br><br>**CAUTION**<br><br>When weapon is not being fired or inspected, keep breechblock closed to relieve tension on closing springs.<br><br>1. Inspect breechblock detent plunger (5) for smooth operation, distortion and wear. If worn, notify unit maintenance.<br>Unit maintenance should also be notified for plunger, spring, and spring pin replacement at 750 rounds (as recorded on Weapons Data Card 2408-4).<br>2. Check locking wire securing mounting bolts of upper and lower support brackets (6). If missing or broken, notify unit maintenance.<br>3. Check for the presence of at least two stake marks on both screws securing breech roller ram (7). If not staked, notify unit maintenance.<br> 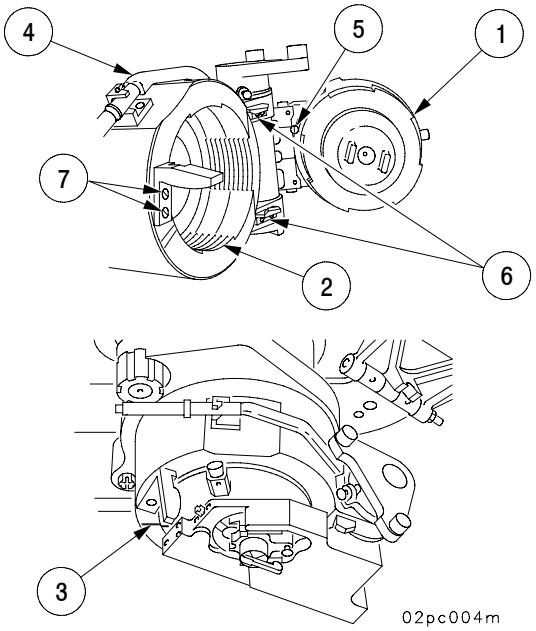 | Breechblock will not close completely (witness marks (3) on breechring do not align with similar marks on breechblock).<br>Operating handle (4) does not work or breech is seized. |

## TABLE 2-1. PREVENTIVE MAINTENANCE CHECKS AND SERVICES FOR HOWITZER, SELF-PROPELLED, M109A6 - CONTINUED

| Item No. | Interval | Location / Item To Check/Service | Crewmember Procedures | Not Fully Mission Capable If: |
|---|---|---|---|---|
| 40 | Before | Rammer | Cannoneer<br><br>**WARNING**<br><br>When exercising rammer, bring rammer to full extension slowly to avoid seal damage.<br><br>Check hoses, tubes, and fittings for hydraulic oil leaks. Check rammer assembly for missing, loose, or broken components.<br>Before firing, perform rammer operational check (para 3-8.3).<br>Lubricate prior to firing weapon (Appendix I). | |
| 41 | During | Powerpack | Driver<br><br>**CAUTION**<br><br>If you notice a shrill whine (above normal turbine whine), rubbing, unusual vibrations, and/or a sudden increase in exhaust smoke, shut off engine and notify unit maintenance.<br><br>Check for unusual noises or vibrations. | Performance or function inadequate; unusual noises or vibrations; inoperative. |
| 42 | During | Instrument Panels | Driver<br>Monitor gages, pressure, temperature, and indicator readings. Monitor tachometer, speedometer operation, and warning lamps for illumination.<br><br> 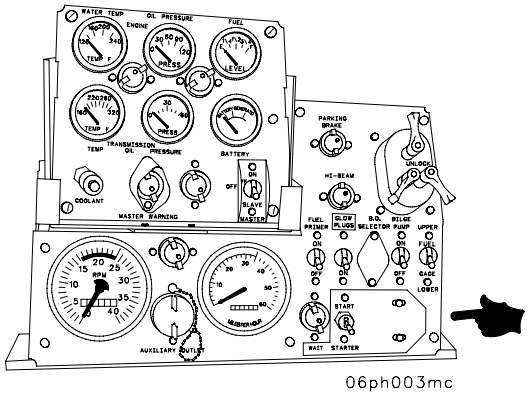 <br> | |

## TABLE 2-1. PREVENTIVE MAINTENANCE CHECKS AND SERVICES FOR HOWITZER, SELF-PROPELLED, M109A6 - CONTINUED

| Item No. | Interval | Location / Item To Check/Service | Crewmember Procedures | Not Fully Mission Capable If: |
|---|---|---|---|---|
| 43 | Deleted | | | |
| 44 | During | AFCS Fault Indications | Chief of Section<br>Monitor FAULT indicator lamp (1) on DU for system fault indication (within AFCS).<br>Verify GUN SERVO light (2) comes on during LOAD/LAY/STOW operations (when AFCS is operating gun) and the LOAD/LAY/STOW keys are depressed and held. Monitor the AFCS display for fault messages from the PDIU, record the faults, read and follow the reconfiguration advice from the PDIU, and notify unit maintenance.<br> 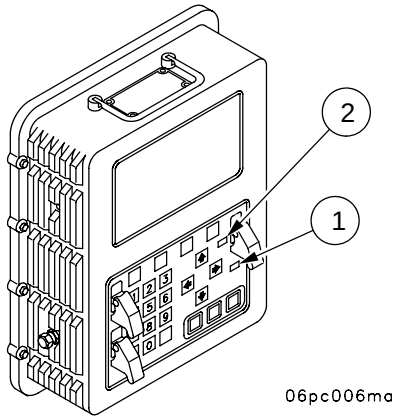 <br><br>**WARNING**<br>All personnel located outside the vehicle must be clear of hull while cab is being traversed. | Unable to LOAD/LAY/STOW in AFCS mode. |
| 45 | During | AFCS Communication | Verify that system is able to receive and transmit digital communication, receive fire mission, and compute fire data. | Unable to receive and transmit digital communication, receive fire mission, compute fire data. |

## TABLE 2-1. PREVENTIVE MAINTENANCE CHECKS AND SERVICES FOR HOWITZER, SELF-PROPELLED, M109A6 - CONTINUED

| Item No. | Interval | Location / Item To Check/Service | Crewmember Procedures | Not Fully Mission Capable If: |
|---|---|---|---|---|
| 45.1 | During | PDFCS Fault Indications | Chief of Section<br>Monitor FAULT indicator lamp (1) on keypad for system fault indication (within PDFCS).<br>Verify GUN SERVO light (2) comes on during LOAD/LAY/STOW operations (when PDFCS is operating gun) and the LOAD/LAY/STOW keys are depressed and held. Monitor the PDFCS display for fault messages from the PDI, record the faults, read and follow the reconfiguration advice from the PDI, and notify unit maintenance.<br> 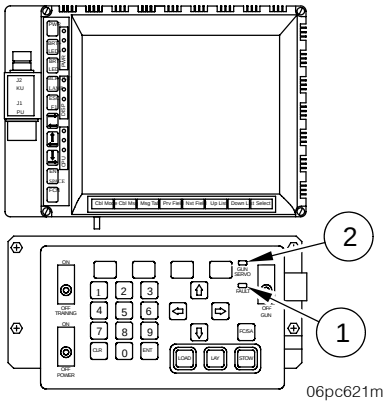 <br><br>**WARNING**<br>All personnel located outside the vehicle must be clear of hull while cab is being traversed. | Unable to LOAD/ LAY/STOW in PDFCS mode. |
| 45.2 | During | PDFCS Communication | Verify that system is able to receive and transmit digital communication, receive fire mission, and compute fire data. | Unable to receive and transmit digital communication, receive fire mission, compute fire data. |
| 46 | During | Traversing Mechanism | Gunner<br>Check traversing mechanism operation in the manual, power, and control modes AFCS (para 2-15.2)/PDFCS (para 2-15E.2). | No traversing in AFCS/PDFCS control mode. |
| 47 | During | Elevating Mechanism | Gunner<br>Check elevating mechanism operation in the manual, power, and control modes AFCS (para 2-15.2)/PDFCS (para 2-15E.2). | No elevating in AFCS/PDFCS control mode. |

## TABLE 2-1. PREVENTIVE MAINTENANCE CHECKS AND SERVICES FOR HOWITZER, SELF-PROPELLED, M109A6 - CONTINUED

| Item No. | Interval | Location / Item To Check/Service | Crewmember Procedures | Not Fully Mission Capable If: |
|---|---|---|---|---|
| 48 | After | Wheel Hubs, Shock Absorbers, and Hydraulic Bumper Stops | **WARNING**<br>Wheel/hubs may be hot after operation. Failure to heed this warning may result in injury to personnel.<br><br>Driver<br>Check for overheated wheel hubs (1). Immediately after operation, feel all wheel hubs cautiously for noticeable variation in temperature between components. An overheated hub indicates a maladjusted, inadequately lubricated, or damage bearing. | Wheel hub is overheating. |
| | | | Feel the lower end of the shock absorbers (2) cautiously and check for variation of temperature between hull area and shock absorber. If shock absorber is operating properly, it should be warmer than the hull area around the shock absorber. If overheating occurs, notify unit maintenance. | Shock absorber broken, missing, or cold. |
| | | | Check shock absorber for any lateral movement. Some rotation on the bearing is to be expected, but if there is any lateral movement between inner and outer bearing assembly, notify unit maintenance. | Shock absorber moves from side to side. |
| | | | Check bumper stops (3) for damage, proper mounting, and leaks. If required, lubricate wheel hubs (Appendix I).<br> 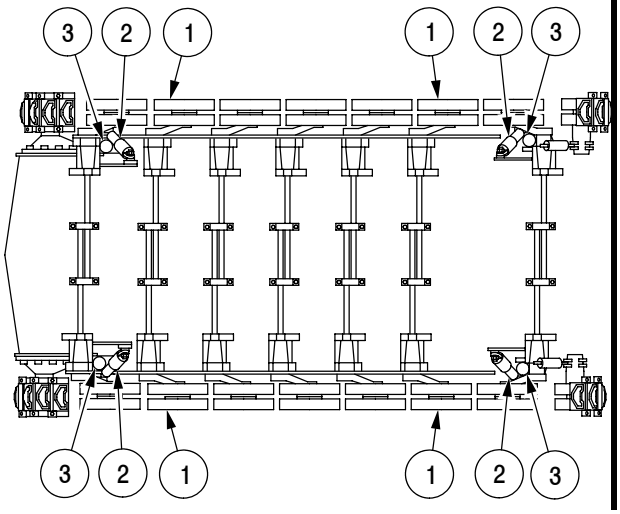 <br> | |

## TABLE 2-1. PREVENTIVE MAINTENANCE CHECKS AND SERVICES FOR HOWITZER, SELF-PROPELLED, M109A6 - CONTINUED

| Item No. | Interval | Location / Item To Check/Service | Crewmember Procedures | Not Fully Mission Capable If: |
|---|---|---|---|---|
| 49 | After | Final Drive Quick-Disconnect and Universal Joint Safety Wiring (Both Sides) | Driver<br>Open transmission access doors (para 2-8.14.9). Check quick-disconnect (1) for secure coupling. Check safety wire (2) on quick-disconnect (1) and universal joint bolts (3).<br> 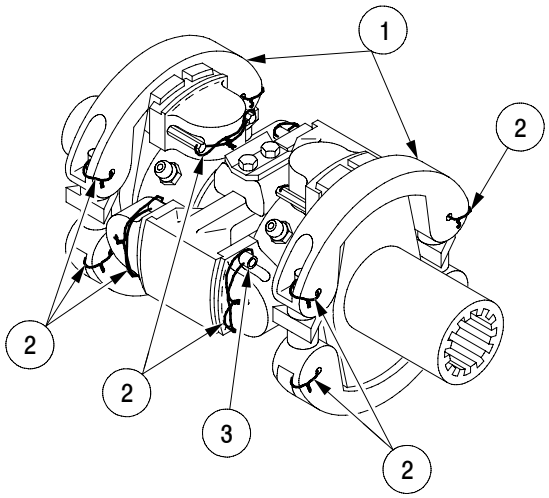 <br><br> 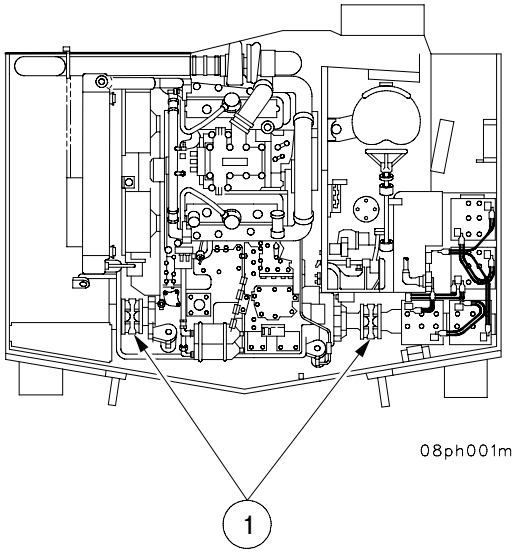 <br> | Loose, broken, or missing bolts. |

## TABLE 2-1. PREVENTIVE MAINTENANCE CHECKS AND SERVICES FOR HOWITZER, SELF-PROPELLED, M109A6 - CONTINUED

| Item No. | Interval | Location / Item To Check/Service | Crewmember Procedures | Not Fully Mission Capable If: |
|---|---|---|---|---|
| 50 | After | Track Shoes, End Connectors, Center Guides, and Track Pads | Driver<br>Inspect track shoes (1) for wear and missing track pads.<br>Check for loose end connectors (2) by tapping with a small hammer. Inspect center guides (3). Tighten all loose end connector bolts and notify unit maintenance for torquing.<br>Replace dead shoes, shoes with missing center guides or connector bolts. Use on-board spares. Check to make sure all pads (4) are present and not worn to the point where grouser (metal surface of track shoe) can damage road surface.<br> 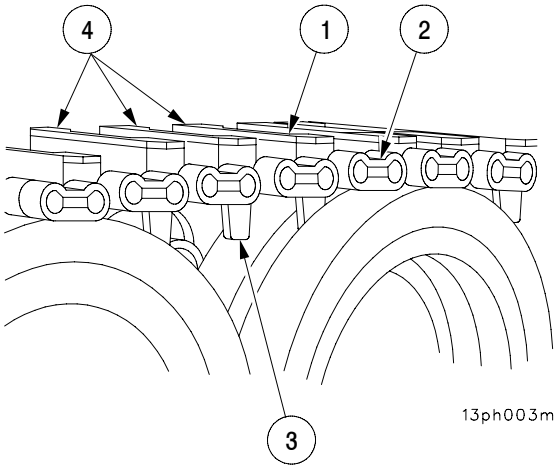 | Track shoe is broken; three or more distorted (dead shoes) indicating excessive bushing wear; missing or cracked end connectors; missing center guides; any connector bolt missing; broken track pin. Three or more pads missing on any side. |

## TABLE 2-1. PREVENTIVE MAINTENANCE CHECKS AND SERVICES FOR HOWITZER, SELF-PROPELLED, M109A6 - CONTINUED

| Item No. | Interval | Location<br>Item To Check/Service | Crewmember<br>Procedures | Not Fully Mission Capable If: |
|---|---|---|---|---|
| 51 | After | Roadwheels and Idler Wheels | Driver<br>Be sure lug nuts (1) are tight and that rubber (2) around steel roadwheels is not separated or chunked so far that wheel thumps as it turns. Check for broken torsion bars by prying up roadwheel.<br>Torsion bar is broken if roadwheel can be lifted. Notify unit maintenance.<br>Check for damaged, bent, broken, or missing roadwheel or idler wheel arms.<br> 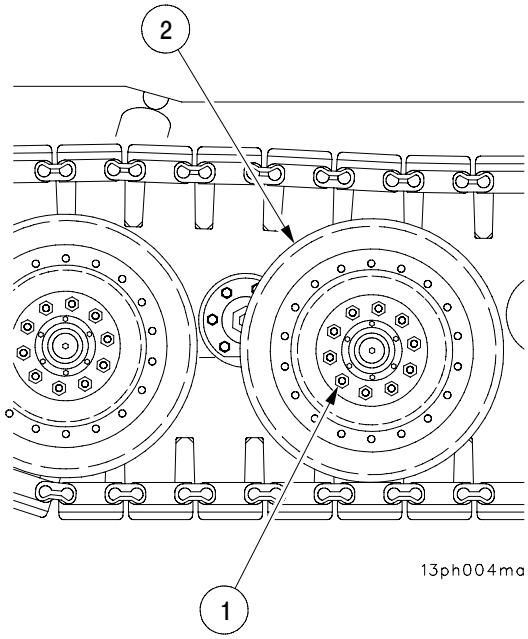 <br> | Missing, bent, or cracked roadwheel or idler wheel; elongated roadwheel or idler wheel mounting holes; separation of 1/2 of rubber contact from steel hub; chunking across 1/2 width of outer rubber surface on any pair of roadwheels (inner and outer); torsion bars missing or broken.<br>Roadwheel and idler wheel arms damaged, bent, broken, or missing. |

## TABLE 2-1. PREVENTIVE MAINTENANCE CHECKS AND SERVICES FOR HOWITZER, SELF-PROPELLED, M109A6 - CONTINUED

| Item No. | Interval | Location<br>Item To Check/Service | Crewmember<br>Procedures | Not Fully Mission Capable If: |
|---|---|---|---|---|
| 52 | After | Sprockets | Driver<br>Each drive sprocket (1) has two teeth (2) with wear marks. If either tooth is worn to edge of wear mark (3) or if any mounting bolts (4) are loose, notify unit maintenance.<br> 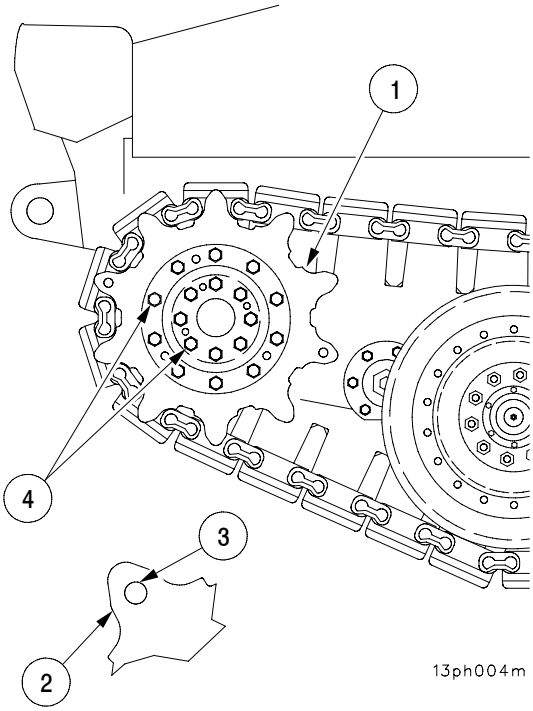 <br> | Sprocket tooth is worn to edge of wear mark; mounting bolts are loose or missing. |

## TABLE 2-1. PREVENTIVE MAINTENANCE CHECKS AND SERVICES FOR HOWITZER, SELF-PROPELLED, M109A6 - CONTINUED

| Item No. | Interval | Location<br>Item To Check/Service | Crewmember<br>Procedures | Not Fully Mission Capable If: |
|---|---|---|---|---|
| 53 | After | Front Lights | Driver<br>**NOTE**<br>Infrared lights and right blackout drive light are disconnected on M109A6.<br>Check for cracked, broken, or discolored lenses. Lenses should be free of dirt or paint. Check operation of service headlights, blackout drive, and blackout markers (para 2-8.6). Check instrument panel lights and high/low beam indicator. | |
| 54 | After | Rear Lights | Driver<br>Check service taillights and brake lights. Inspect for cracked, broken, discolored, dirty, or painted-over lenses (para 2-8.6). | |
| 54.1 | After | Transmission Oil Level | Driver<br>**NOTE**<br>• Check transmission oil level with vehicle parked on level ground, if possible.<br>• Do not check oil with engine running and do not overfill.<br>Ensure travel lock is in maintenance position (para 2-8.19.3).<br>Open both transmission access doors (para 2-8.14.9).<br>Check level after shutting engine down. Level should be within the OPERATING RANGE stamped on the dipstick (1). Oil level will vary with changes in oil temperature. Add or drain oil as required (Appendix I).<br> 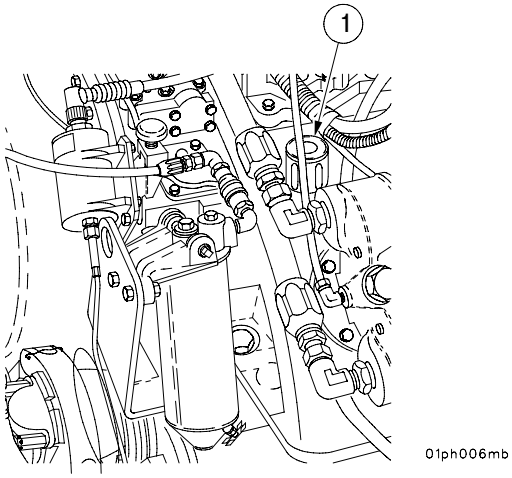 | Any Class III leak found. |

## TABLE 2-1. PREVENTIVE MAINTENANCE CHECKS AND SERVICES FOR HOWITZER, SELF-PROPELLED, M109A6 - CONTINUED

| Item No. | Interval | Location / Item To Check/Service | Crewmember Procedures | Not Fully Mission Capable If: |
|---|---|---|---|---|
| 54.2 | After | Generator Belt | Driver<br>Visually inspect the generator belt for frays or badly worn areas. If belt is broken or excessively worn, notify unit maintenance. | Belt is broken, frayed or cracked. |
| | | | 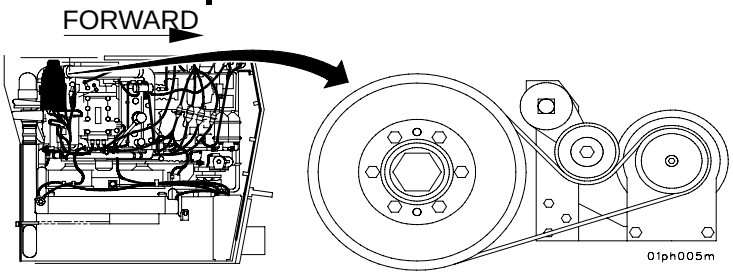 | |
| 55 | After | Fuel System | Driver<br>Check fuel level gage. Refill tank to proper level (para 3-7.3). | |
| 56 | After | Night Viewer AN/VVS-2(V)4 | Driver<br>For detailed instructions on your driver's night viewer AN/VVS-2(V)4, see TM 11-5855-249-10. | |
| 56.1 | After | Cooling Fans | Driver<br>**WARNING**<br>Keep hands and loose clothing away from fans when working with running engine. Injury or death to personnel may result.<br>Open engine air intake grille (para 2-8.14.10) and transmission access doors.<br>Check for coolant leaks and serviceability of hoses.<br>Check cooling fans (1) for missing or broken parts.<br>Start engine. Check that cooling fans (1) are turning. Check for oil leaks at fan drive. Check hoses and fittings for leaks.<br> 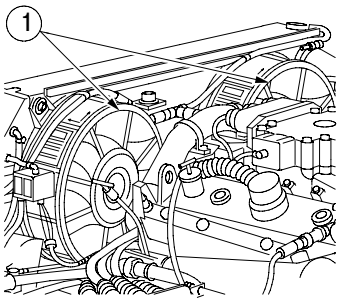 | Either Class III leak, cooling fan missing or not operating. Fin(s) broken or cracked. |

## TABLE 2-1. PREVENTIVE MAINTENANCE CHECKS AND SERVICES FOR HOWITZER, SELF-PROPELLED, M109A6 - CONTINUED

| Item No. | Interval | Location<br>Item To Check/Service | Crewmember<br>Procedures | Not Fully Mission Capable If: |
|---|---|---|---|---|
| 56.2 | After | Primary and Secondary Fuel Filters | Driver<br>**NOTE**<br>Ensure that travel lock is in maintenance position (para 2-8.19.3).<br>Open both transmission access doors (para 2-8.14.9).<br>Open bottom drain cocks (1) and drain water into a suitable container until clean fuel flows from filters.<br>Close drain cocks (1).<br>After filters are drained, turn FUEL PRIMER switch (2) ON for 45 seconds to purge system of air before starting engine. Check hoses and fittings for leaks.<br> 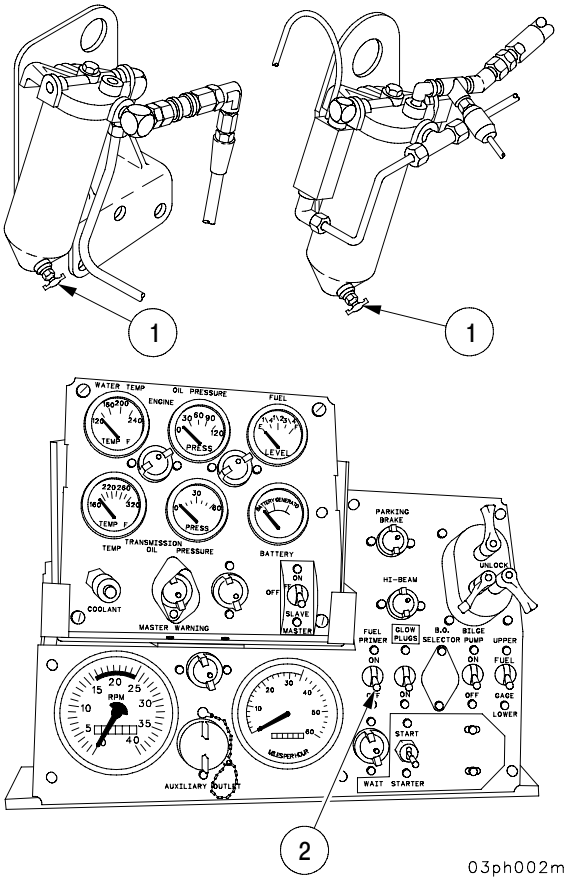 <br> | Any leaks |

## TABLE 2-1. PREVENTIVE MAINTENANCE CHECKS AND SERVICES FOR HOWITZER, SELF-PROPELLED, M109A6 - CONTINUED

| Item No. | Interval | Location<br>Item To Check/Service | Crewmember<br>Procedures | Not Fully Mission Capable If: |
|---|---|---|---|---|
| 57 | After | Gun Tube and Muzzle Brake | Chief of Section<br>a. After firing, check muzzle brake (1) for cracks.<br>b. Ensure that muzzle brake key (2) is partly covered by collar (3).<br>c. Check setscrew (4) for tightness. Check setscrew (5); it will be staked.<br>d. Clean and service gun tube (Appendix I).<br>e. Inspect gun tube (6) for damage.<br> 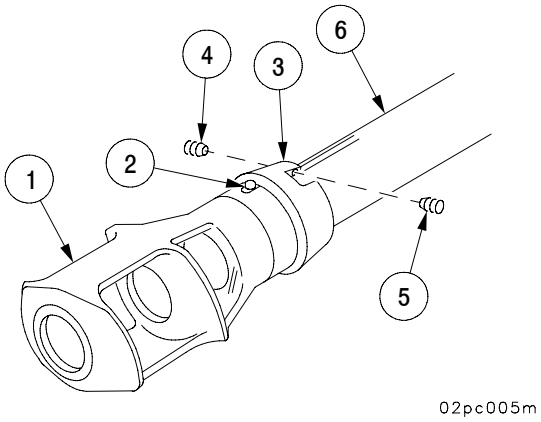 <br> | Any cracks in muzzle brake over 1-in. (2.54 cm) long.<br>Muzzle brake key is damaged or missing.<br>Either setscrew is missing.<br>Any cracks in tube. |
| 58 | After | Bore Evacuator and Ball Valves | Chief of Section<br>**WARNING**<br>Failure to maintain bore evacuator properly will expose crew to air contaminated with carbon monoxide, producing symptoms of headache, dizziness, loss of muscular control, apparent drowsiness, and coma. Permanent brain damage and death can result from severe exposure. | |

## TABLE 2-1. PREVENTIVE MAINTENANCE CHECKS AND SERVICES FOR HOWITZER, SELF-PROPELLED, M109A6 - CONTINUED

| Item No. | Interval | Location<br>Item To Check/Service | Crewmember<br>Procedures | Not Fully Mission Capable If: |
|---|---|---|---|---|
| 58 - Cont | After | Bore Evacuator and Ball Valves - Continued | Chief of Section<br>After firing, separate main reservoir (1) and prereservoir (2) of bore evacuator assembly (para 3-8.8). Muzzle brake need not be removed.<br>Remove, clean, and lubricate nine evacuator ball valves (3), nine prereservoir orifices (3.1), 10 evacuator orifices (4), and three metering holes (5). Ensure that bottom setscrew is staked.<br>Clean and inspect ring valve (6) for cracks, breaks, or deformation.<br>Inspect O-rings (preformed packing) (8 and 9), on the outer and inner grooves of prereservoir (2) and O-ring (10) on the inner groove of main reservoir (1) for damage or missing. Check for signs of gas wash (soot) past O-rings. Notify Unit Maintenance for replacement.<br>Clean tube and tube threads (7).<br>Notify unit maintenance if ring valve is cracked, broken, or deformed, or if threads are burred or damaged.<br>After installing setscrew in bore evacuator, notify unit maintenance for torquing.<br>**NOTE**<br>Some rotation of the bore evacuator is acceptable. However, if it rotates more than 1 in., check ball lock spring and ball lock functioning. Notify unit maintenance if problem persists. | If staked screw is missing. If ring valve is broken, cracked, or missing. If any ball is missing. If either end O-ring (preformed packing) is damaged or missing, or if internal O-ring is damaged or missing, or signs of gas wash (soot) past O-ring. |

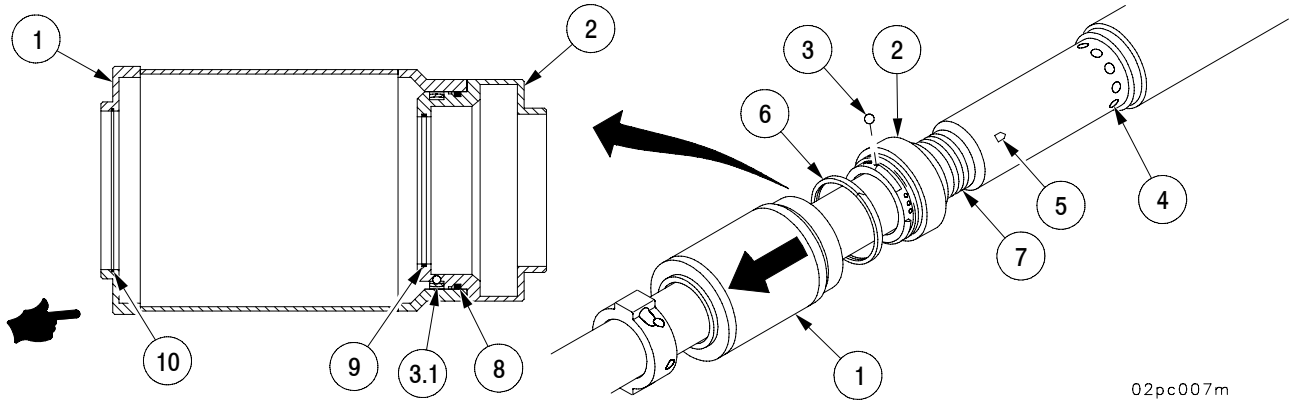

## TABLE 2-1. PREVENTIVE MAINTENANCE CHECKS AND SERVICES FOR HOWITZER, SELF-PROPELLED, M109A6 - CONTINUED

| Item No. | Interval | Location<br>Item To Check/Service | Crewmember<br>Procedures | Not Fully Mission Capable If: |
|---|---|---|---|---|
| 59 | After | Air Cleaner Restriction Indicator | Chief of Section<br>Check air cleaner restriction indicator (1) for green. If red, service air cleaners (para 3-7 .13).<br> 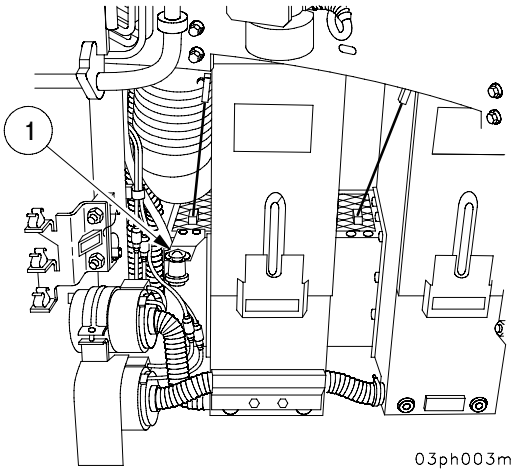 <br> | |
| 60 | After | Caliber .50 Machine Gun M2 | Chief of Section<br>For detailed instructions on your caliber .50 machine gun M2, see TM 9-1005-213-10.<br> 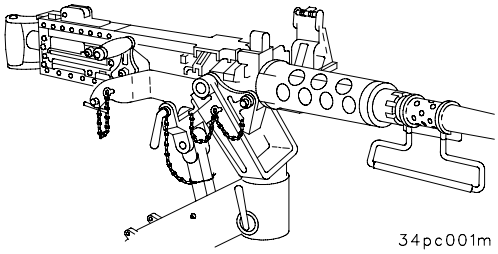 <br> | |

## TABLE 2-1. PREVENTIVE MAINTENANCE CHECKS AND SERVICES FOR HOWITZER, SELF-PROPELLED, M109A6 - CONTINUED

| Item No. | Interval | Location<br>Item To Check/Service | Crewmember<br>Procedures | Not fully Mission Capable If: |
|---|---|---|---|---|
| 61 | After | Obturator Spindle | Cannoneer<br>Check and clean spindle group (1). If primers consistently stick after cleaning primer chamber, check extractor. If extractor is working properly and primers are deformed or show signs of gas wash or erosion, notify unit maintenance. | |
| 62 | After | Cannon Breech Ring Bracket Support Lugs | Cannoneer<br>Clean and lubricate lugs (2) (Appendix I). Check for lockwire, if lockwire is not present, notify unit maintenance.<br> 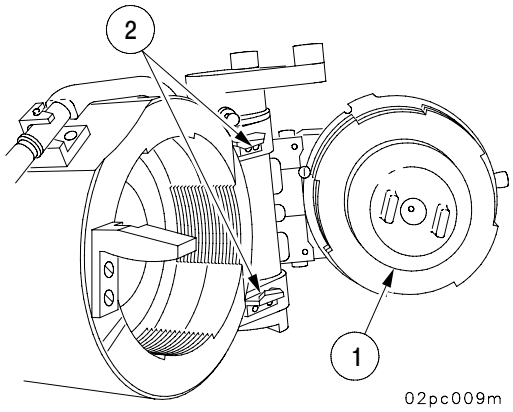 <br> | Mounting hardware loose, broken, or missing. |
| 63 | After | Bustle Rack | **NOTE**<br>Check all projectile retainer assemblies.<br>Check retainer locking pin (1) will lock in all positions when inner ring (2) is rotated and decals (3) are legible.<br> 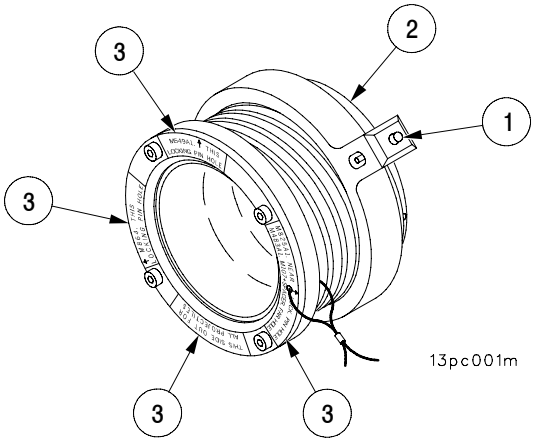 <br> | |

## TABLE 2-1. PREVENTIVE MAINTENANCE CHECKS AND SERVICES FOR HOWITZER, SELF-PROPELLED, M109A6 - CONTINUED

| Item No. | Interval | Location / Item To Check/Service | Crewmember Procedures | Not fully Mission Capable If: |
|---|---|---|---|---|
| 63 Cont | After | Bustle Rack | Cannoneer<br><br>**WARNING**<br>If bustle rack has projectiles loaded, make sure that retainer locks and retainers are in place and straps are securing projectiles in bustle compartments.<br>Make sure each retainer lock (1) is rotated to hold its retainer (2) in place. Check to see that each end of wire ropes (3) is securely attached to retainer and bustle.<br> 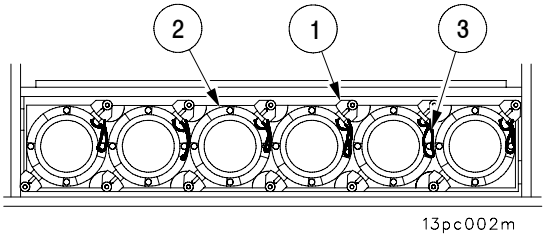 <br><br>**WARNING**<br>• If bustle has powder cannisters loaded, make sure cannisters are firmly secured in bustle with webbing straps.<br>• Do not carry or transport more powder cannisters than can be secured.<br>**NOTE**<br>Use cannister retaining tool to check each locking device, and to increase or decrease tension on each strap (1).<br>Make sure each strap (1), ratchet handle, and locking device works properly, and slat hooks are secured in bustle retainer bars. Make sure each strap buckle (2) opens and closes correctly and holds tension.<br> 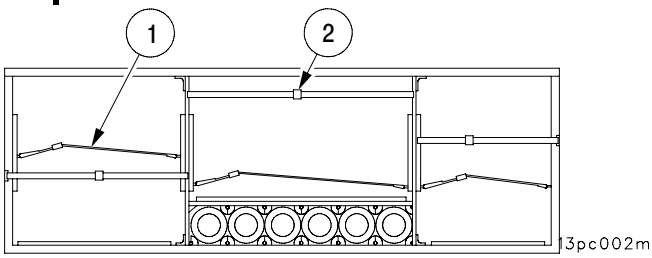 <br> | |

## TABLE 2-1. PREVENTIVE MAINTENANCE CHECKS AND SERVICES FOR HOWITZER, SELF-PROPELLED, M109A6 - CONTINUED

| Item No. | Interval | Location<br>Item To Check/Service | Crewmember<br>Procedures | Not fully Mission Capable If: |
|---|---|---|---|---|
| 64 | After | Projectile Storage Racks | Cannoneer<br>**WARNING**<br>• If projectile storage racks have projectiles loaded, make sure all projectiles are firmly secured to cradles, brackets, and ammunition racks with webbing straps, latch assemblies and with ammunition rack arm.<br>• Do not carry or transport more projectiles than can be secured.<br>Check for missing or broken latches (1), webbing straps (2), hinged cradles (3) or rotating hook bolts (4). Make sure each latch (1) and rotating hook bolt (4) operate correctly and hold tension, notify unit maintenance. | |

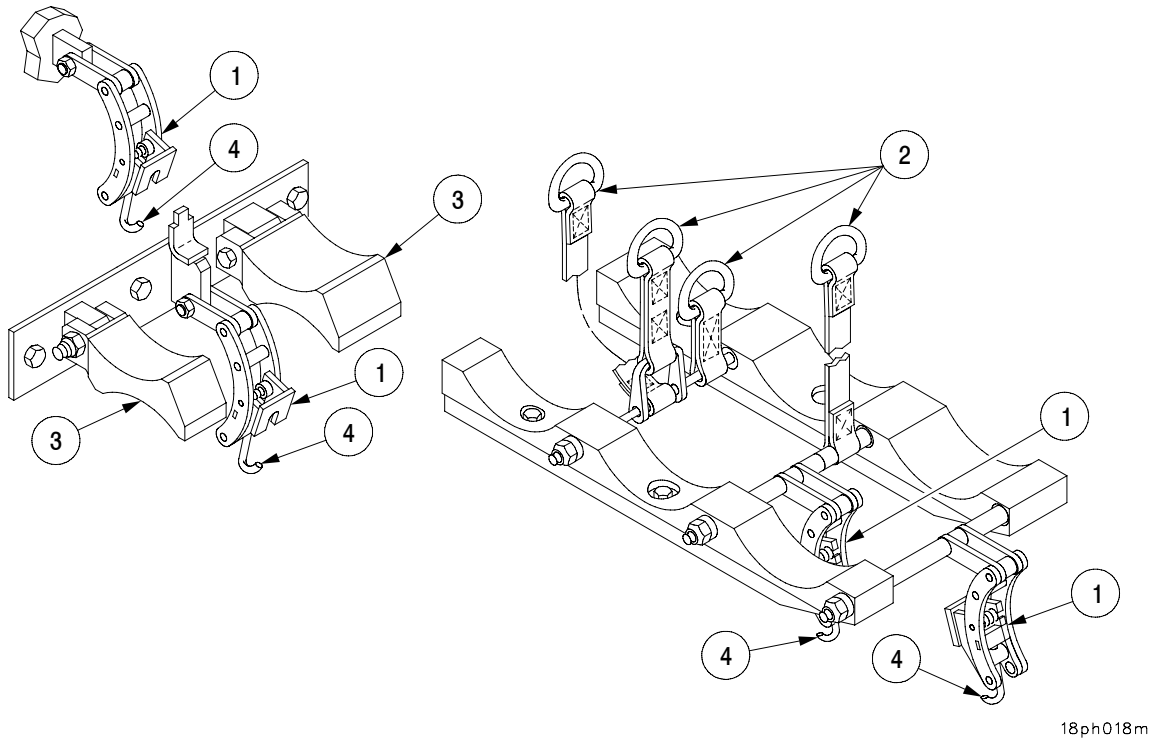

## TABLE 2-1. PREVENTIVE MAINTENANCE CHECKS AND SERVICES FOR HOWITZER, SELF-PROPELLED, M109A6 - CONTINUED

| Item No. | Interval | Location<br>Item To Check/Service | Crewmember<br>Procedures | Not fully Mission Capable If: |
|---|---|---|---|---|
| 64 Cont | After | Projectile Storage Racks | Cannoneer<br>Check for damaged or missing cushioning pads (1), nonmetallic bumpers (2), webbing straps (3), wing nut (4), nuts (5 and 6), eyebolt (7), friction tab (8), pins (9), cotter pins (10), screws (11), flat washers (12), spacer plate (13), ammunition cradle (14), or ammunition rack arm (15), notify unit maintenance. | |

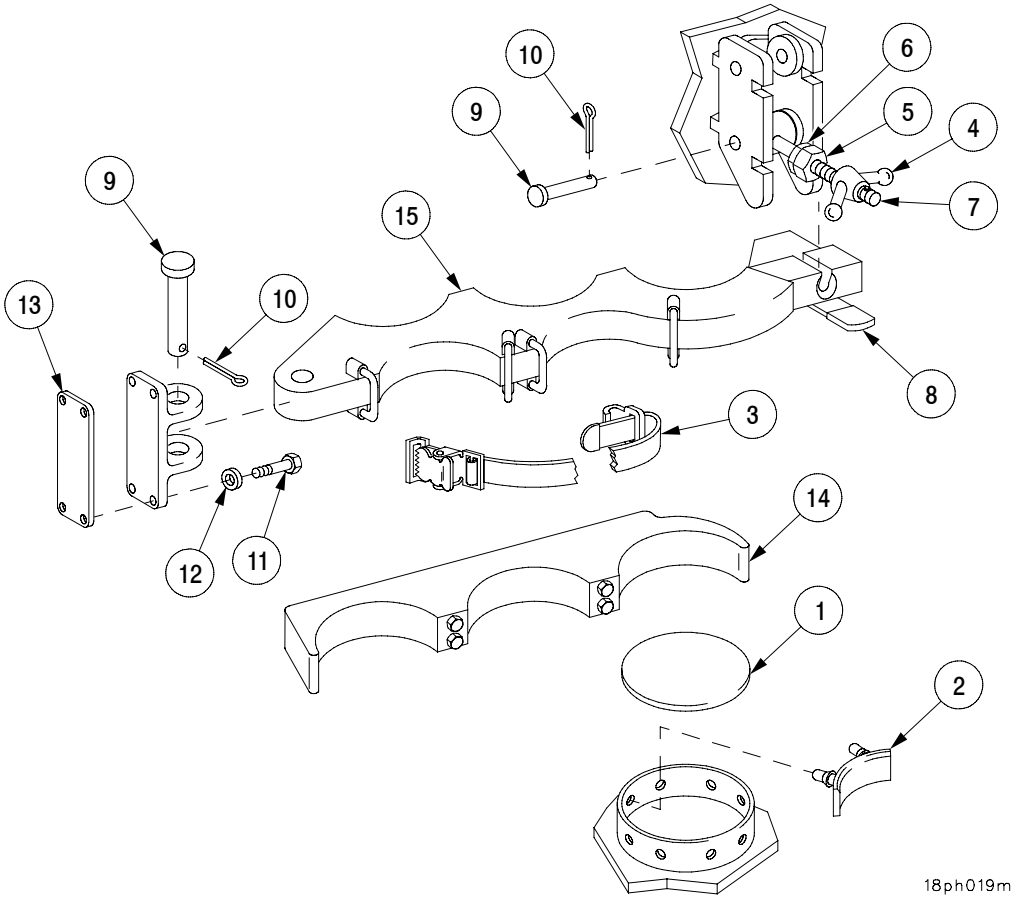

## TABLE 2-1. PREVENTIVE MAINTENANCE CHECKS AND SERVICES FOR HOWITZER, SELF-PROPELLED, M109A6 - CONTINUED

| Item No. | Interval | Location<br>Item To Check/Service | Crewmember<br>Procedures | Not fully Mission Capable If: |
|---|---|---|---|---|
| 65 | After | Inlet to the Microclimate Conditioning System through the Air Particle Separator | Gunner<br>**WARNING**<br>Do not attempt to clean air particle separator grill while Microclimate Conditioning System (MCS) is operating. Injury to personnel can result.<br>a. Check air particle separator inlet (1) for debris.<br>b. Remove debris as necessary.<br> 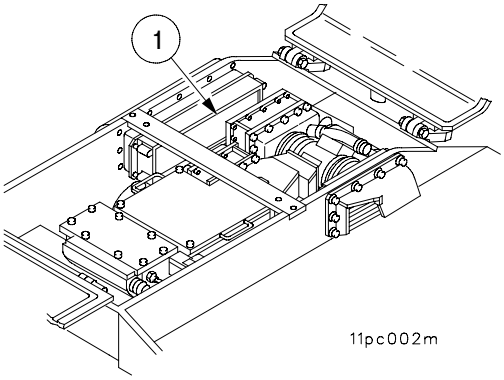 | |
| 66 | After | Crew Compartment | All<br>Wipe clean any water, oil, or grease on crew compartment floor.<br>Inspect hydraulic lines, hoses, and connections, valves, motor cylinders, and pump for leaks. Check oil level in reservoir. Add fluid if required (Appendix I). Check electrical connections for loose wires and corrosion. Clean and tighten, if necessary. | Fluid loss of over 3 quarts in a 24-hour period. |

## TABLE 2-1. PREVENTIVE MAINTENANCE CHECKS AND SERVICES FOR HOWITZER, SELF-PROPELLED, M109A6 - CONTINUED

| Item No. | Interval | Location<br>Item To Check/Service | Crewmember<br>Procedures | Not fully Mission Capable If: |
|---|---|---|---|---|
| 66.1 | After | Accelerator Pedal | Driver<br>Check for missing or unserviceable accelerator pedal return spring by depressing accelerator pedal (1) and releasing.<br> 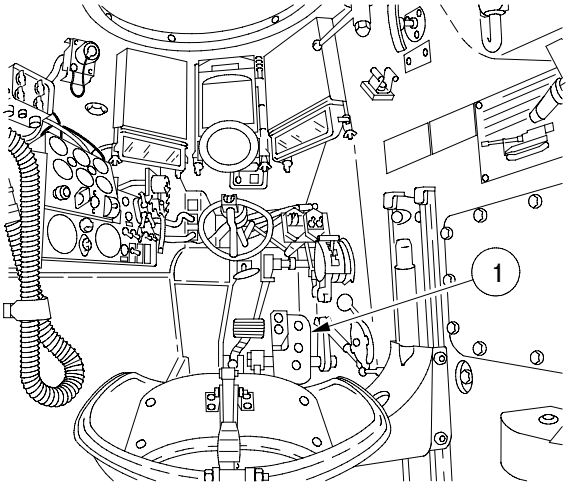 <br> | If accelerator pedal does not return to idle position after being depressed. |
| 66.2 | After | Lead Particulate Filter and Ventilation System | Gunner<br>**WARNING**<br>If lead filter blower is nonoperational, the rear door must be open during firing to prevent drawing propellant fumes and smoke, that can cause injury to personnel, into vehicle. | |

## TABLE 2-1. PREVENTIVE MAINTENANCE CHECKS AND SERVICES FOR HOWITZER, SELF-PROPELLED, M109A6 - CONTINUED

| Item No. | Interval | Location / Item To Check/Service | Crewmember Procedures | Not fully Mission Capable If: |
|---|---|---|---|---|
| 66.2 cont | After | Lead Particulate Filter and Ventilation System | Gunner<br>a. Ensure ventilation intake/exhaust duct grille is clear of debris.<br>b. Turn vehicle MASTER switch ON.<br>b.1 Move Vent Duct Control Handle to UP position.<br>c. Move ventilation fan selection switch (1) to LEAD FILTER (INTAKE).<br>d. Check for air flow at filter cover (2).<br>e. Press lamp test cover (3) and observe if LEAD FILTER CHANGE lamp illuminates. If intake blower is inoperative or LEAD FILTER CHANGE lamp indicates filter is clogged, notify unit maintenance.<br>e.1 Move Vent Duct Control Handle to the DOWN position.<br>f. Move ventilation fan selection switch (1) to PERSONNEL FAN (EXHAUST). EXHAUST lamp (4) should illuminate.<br> 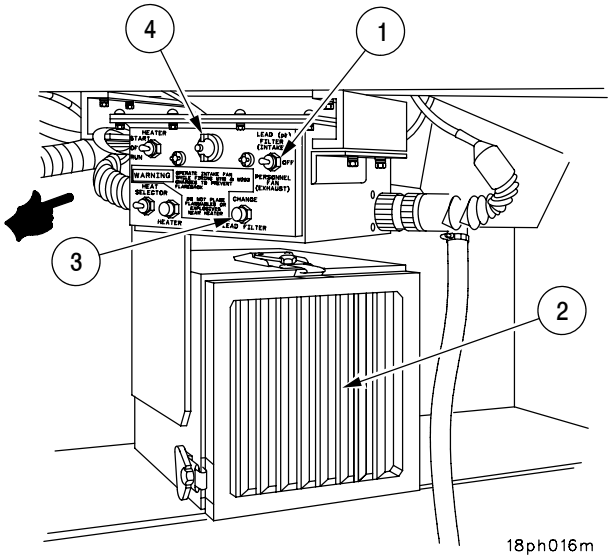 <br><br>g. Check for air flow from ventilation intake/exhaust duct grille.<br>h. Check for loose, frayed, or cut wiring.<br>i. Check drain and air duct hoses for cracks, cuts, loose, or missing clamps or other damages.<br>If exhaust blower is inoperative, drain or air duct hoses missing, cut, or damaged, notify unit maintenance. | |

## TABLE 2-1. PREVENTIVE MAINTENANCE CHECKS AND SERVICES FOR HOWITZER, SELF-PROPELLED, M109A6 - CONTINUED

| Item No. | Interval | Location / Item To Check/Service | Crewmember Procedures | Not fully Mission Capable If: |
|---|---|---|---|---|
| 67 | Weekly | Torsion Bars | Driver<br>Using a crowbar, check for broken torsion bars by prying up roadwheel. | Any torsion bar broken or missing. |
| 68 | Weekly | Track Tension | Driver<br>Move vehicle forward and backward several times on level ground, stopping by shifting the shift selector into neutral and coasting to a stop without applying the brakes. Turn off engine. Distance from top of the third roadwheel (from the front) to track should be 1/4-in. If not, adjust track tension (para 3-7.5.1). Notify unit maintenance. | |

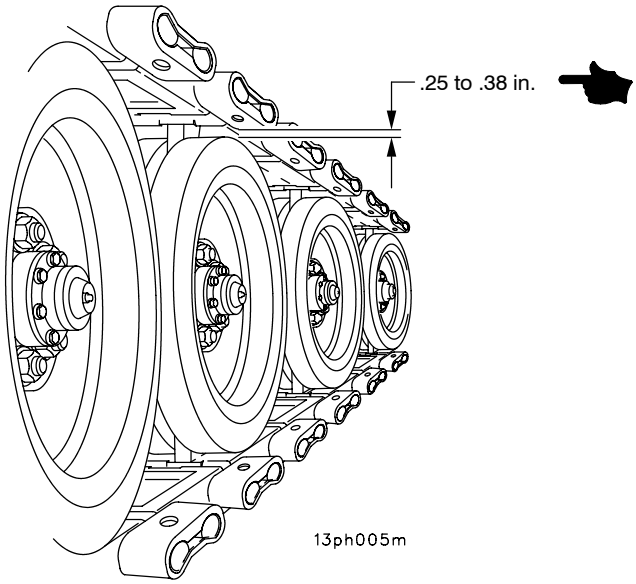

## TABLE 2-1. PREVENTIVE MAINTENANCE CHECKS AND SERVICES FOR HOWITZER, SELF-PROPELLED, M109A6 - CONTINUED

| Item No. | Interval | Location<br>Item To Check/Service | Crewmember<br>Procedures | Not fully Mission Capable If: |
|---|---|---|---|---|
| 69 | Weekly | Track Adjuster | Driver<br>Check for bent or broken track adjusters (1).<br>Check if track adjuster has reached its maximum limit (3.50 in. (8.89 cm)). If so, remove one track shoe and readjust track.<br> 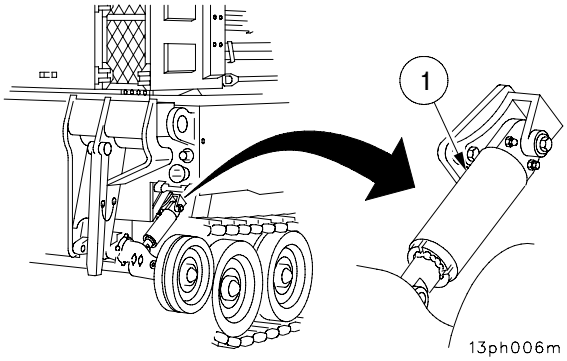 | Track adjuster is bent, broken, or will not adjust. |
| 70 | Weekly | Tow Pintle | Driver<br>Check pintle (1) for proper operation. Inspect for loose mounting bolts (2).<br>Lubricate (Appendix I).<br> 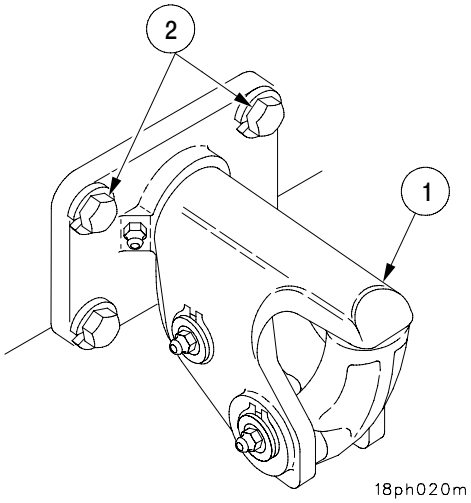 | |

## TABLE 2-1. PREVENTIVE MAINTENANCE CHECKS AND SERVICES FOR HOWITZER, SELF-PROPELLED, M109A6 - CONTINUED

| Item No. | Interval | Location<br>Item To Check/Service | Crewmember<br>Procedures | Not fully Mission Capable If: |
|---|---|---|---|---|
| 71 | Weekly | Slave Start Receptacles and External Power | Driver<br>Check slave start receptacle (1) and external power receptacle (2) for corrosion. Clean as required.<br> 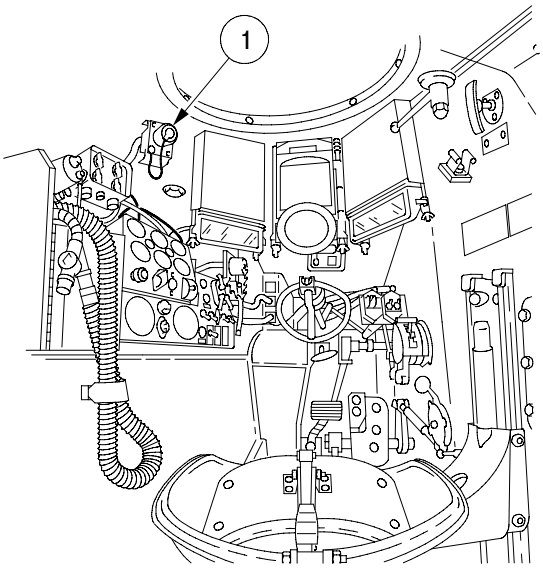 <br><br> 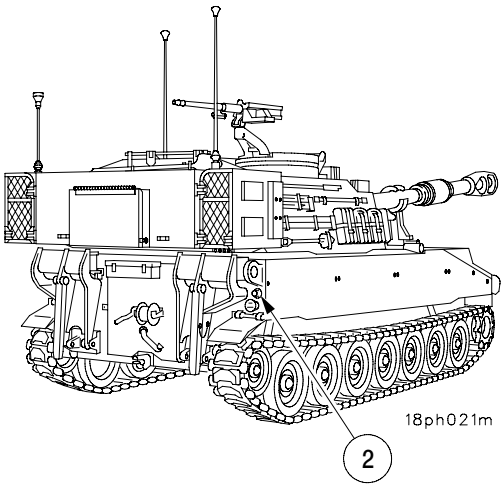 <br> | |

## TABLE 2-1. PREVENTIVE MAINTENANCE CHECKS AND SERVICES FOR HOWITZER, SELF-PROPELLED, M109A6 - CONTINUED

| Item No. | Interval | Location<br>Item To Check/Service | Crewmember<br>Procedures | Not fully Mission Capable If: |
|---|---|---|---|---|
| 72 | Weekly | Bilge Pump | Driver<br><br>**CAUTION**<br><br>To check bilge pump operation, do not operate bilge pump dry for longer than 1 minute, or wet for more than 15 minutes without engine running.<br><br>Check bilge pump for proper operation. Turn MASTER switch (1) ON and turn bilge pump switch (2) ON. If engine compartment is dry, feel for air at bilge pump outlet (3).<br><br> 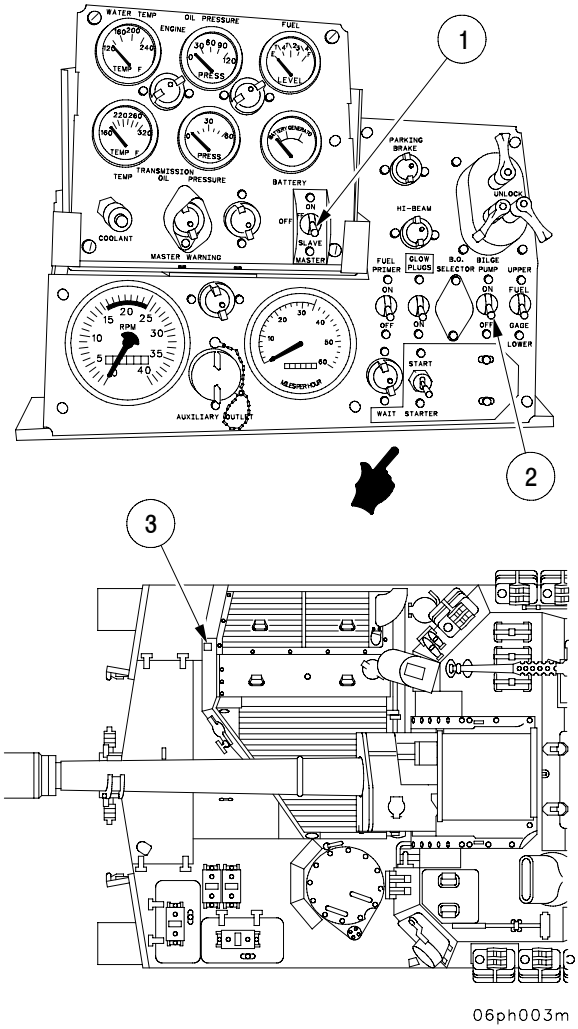 <br> | |

## TABLE 2-1. PREVENTIVE MAINTENANCE CHECKS AND SERVICES FOR HOWITZER, SELF-PROPELLED, M109A6 - CONTINUED

| Item No. | Interval | Location / Item To Check/Service | Crewmember Procedures | Not fully Mission Capable If: |
|---|---|---|---|---|
| 73 | Weekly | Batteries | Driver<br>**WARNING**<br>• Lead-acid battery gases can explode. Don't smoke, have open flame, or make sparks around a battery, especially if the caps are off. If a battery is gassing, it can explode and cause injury. If gassing exists, notify unit maintenance for removal and servicing.<br>• Remove all jewelry such as rings, dog tags, bracelets, etc. If jewelry contacts battery terminal, a direct short will result, causing instant heating of jewelry, tools, and damage to equipment and injury to personnel.<br>a. Open battery compartment access doors.<br>b. Check electrolyte level. Electrolyte should be filled to the ledge in battery filler opening (vent). If low or boiling, notify unit maintenance.<br>c. Check that connections are tight and not corroded. If corroded or loose, notify unit maintenance. Cap vents should be clean and screwed on tightly.<br>d. Check for cracked batteries. If cracked, notify unit maintenance.<br>e. Check battery terminal cover for cracks. If cracked, notify unit maintenance.<br> 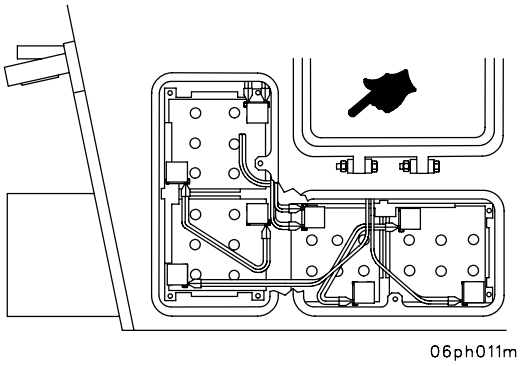 <br>06ph011m | A battery is missing or cracked or the engine will not crank.<br>Any loose cables or terminals.<br>Batteries will not start vehicle. |

## TABLE 2-1. PREVENTIVE MAINTENANCE CHECKS AND SERVICES FOR HOWITZER, SELF-PROPELLED, M109A6 - CONTINUED

| Item No. | Interval | Location<br>Item To Check/Service | Crewmember<br>Procedures | Not fully Mission Capable If: |
|---|---|---|---|---|
| 74 | Weekly | Caliber .50 Machine Gun Mount | Chief of Section<br>Inspect to ensure pins (1) and chains (2) are serviceable.<br> 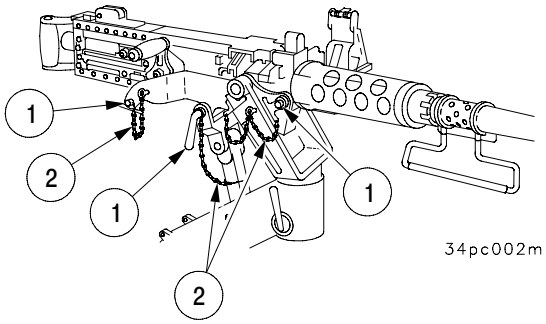 <br> | |
| 75 | Deleted | | | |

## TABLE 2-1. PREVENTIVE MAINTENANCE CHECKS AND SERVICES FOR HOWITZER, SELF-PROPELLED, M109A6 - CONTINUED

| Item No. | Interval | Location / Item To Check/Service | Crewmember Procedures | Not fully Mission Capable If: |
|---|---|---|---|---|
| 76 | Weekly | Engine Air Cleaners | Driver<br><br>a. Check air cleaner filter packs. Refer to para 3-7.13.<br><br>**CAUTION**<br><br>Ensure that engine is shut off before making this check.<br><br>b. Check air cleaner blower motor hoses for holes, cracking, or dry rot.<br><br>c. Check that locking handles are properly set:<br>(1) Winter position (below 25°F). Leave locking handles (1) in holders (2).<br>(2) Summer position (over 40°F). Raise handles (1) and fasten on hooks (3).<br>(3) Intermediate temperatures (25°F to 40°F). Start engine with locking handles in winter position. When engine reaches operating temperature, place handles in summer position.<br><br> 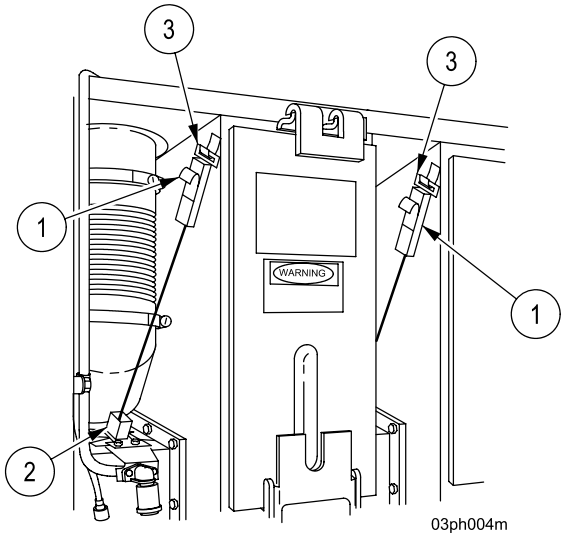 <br> | Any seals or hoses cracked, worn, or missing.<br><br>Blower motors inoperative.<br><br>Air cleaner filters clogged or wet.<br><br>Air cleaner doors, filter elements, or hoses are missing.<br><br>Air cleaner doors won't open or close properly. |

## TABLE 2-1. PREVENTIVE MAINTENANCE CHECKS AND SERVICES FOR HOWITZER, SELF-PROPELLED, M109A6 - CONTINUED

| Item No. | Interval | Location<br>Item To Check/Service | Crewmember<br>Procedures | Not fully Mission Capable If: |
|---|---|---|---|---|
| 77 | Weekly | Doors, Hatches, and Latches | All<br>Check hatch/door seals for looseness, tears or deterioration. Ensure that latches and doors lock securely in both open and closed positions. | Doors cannot be secured. |
| 78 | Weekly | Seats | Driver<br>Inspect seat belt (1), seat and backrest cushions (2 and 3) for deterioration. Make sure seat belt (1) buckle and end plate engage securely. Make sure seat adjustment levers (4 and 5) securely lock seat in all positions. Fold and unfold backrest (6) and check for binding. Check for loose or missing mounting hardware.<br> 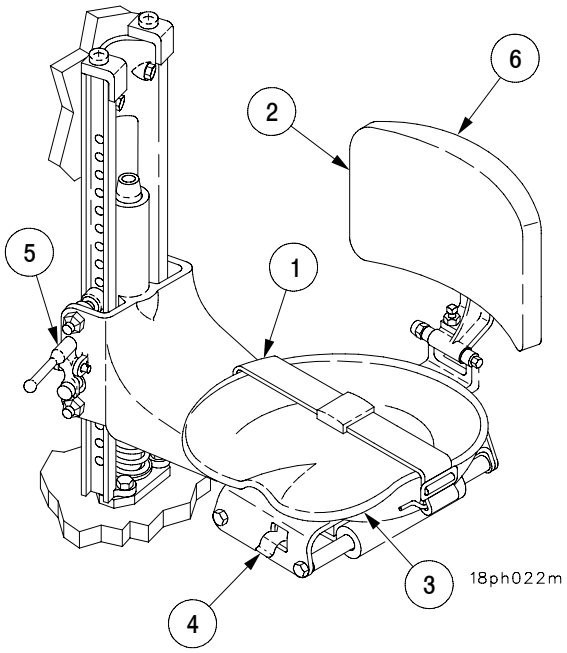 <br> | |

## TABLE 2-1. PREVENTIVE MAINTENANCE CHECKS AND SERVICES FOR HOWITZER, SELF-PROPELLED, M109A6 - CONTINUED

| Item No. | Interval | Location<br>Item To Check/Service | Crewmember<br>Procedures | Not fully Mission Capable If: |
|---|---|---|---|---|
| 78 Cont | Weekly | Seats | Crew<br>Inspect seat belt (1), backrest (2), seat (3) and footrest straps (4) for deterioration. Ensure seat belt (1) mounting brackets are securely attached, and buckle/end plate engages securely. Open and restore backrest (2), seat (3), and footrest (5) and check for binding and loose, or missing mounting hardware.<br> 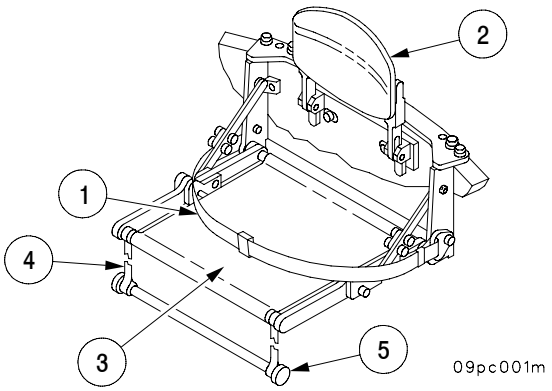 <br> | |

## TABLE 2-1. PREVENTIVE MAINTENANCE CHECKS AND SERVICES FOR HOWITZER, SELF-PROPELLED, M109A6 - CONTINUED

| Item No. | Interval | Location<br>Item To Check/Service | Crewmember<br>Procedures | Not fully Mission Capable If: |
|---|---|---|---|---|
| 78 Cont | Weekly | Seats | Chief of Section<br>Inspect seat belt (1) seat cushion (2), and backrest pad (3) for deterioration. Make sure seat belt (1) buckle and end plate engage securely. Make sure seat adjustment levers (4 and 5) securely lock seat in all positions. Make sure seat backrest/stand (6) folds and unfolds without binding. Check footrest (7) in all positions for free rotation and locking. Check for loose, missing, or broken mounting hardware.<br> 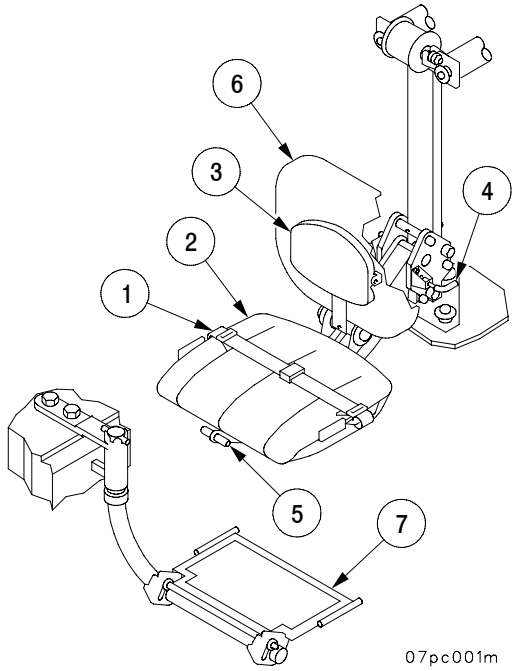 <br> | |
| 79 | Weekly | Slip Ring Segment Board Assembly | Crew<br>Clean slip ring segment board assembly (para 3-8.17). | |

## TABLE 2-1. PREVENTIVE MAINTENANCE CHECKS AND SERVICES FOR HOWITZER, SELF-PROPELLED, M109A6 - CONTINUED

| Item No. | Interval | Location<br>Item To Check/Service | Crewmember<br>Procedures | Not fully Mission Capable If: |
|---|---|---|---|---|
| 80 | Weekly | Personnel Heater | Gunner<br>**WARNING**<br>• Do not operate personnel heater while vehicle is in motion.<br>• If the heater operates improperly, fuel may overflow, causing danger of fire or explosion.<br>• Be alert during heater operation for exhaust odors or signs of exposure to carbon monoxide. Carbon monoxide can kill you. If present, shut off the heater and ventilate the vehicle.<br>• Explosive/flammable materials are a fire hazard. Do not store aerosol cans, solvents, fuel, etc., anywhere inside vehicle. Stow ammunition and powder in authorized stowage racks.<br>a. Operate personnel heater for at least 5 minutes each week. Be alert for signs of damage, loose fittings, loose connections, and fuel leaks; notify unit maintenance if any are found.<br>b. Check crew/driver duct outlets for steady warm air output. If there is no warm air output, shut off heater and notify unit maintenance.<br> 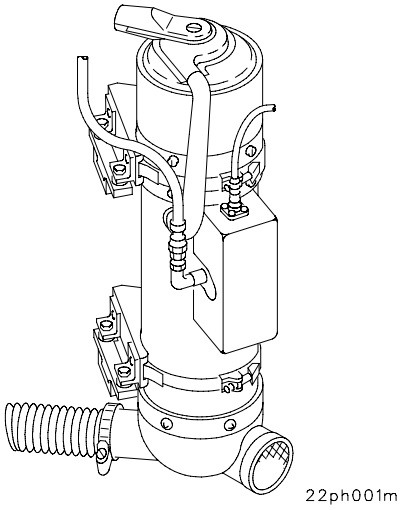 <br>22ph001m | Any sign of fuel leakage. |

## TABLE 2-1. PREVENTIVE MAINTENANCE CHECKS AND SERVICES FOR HOWITZER, SELF-PROPELLED, M109A6 - CONTINUED

| Item No. | Interval | Location<br>Item To Check/Service | Crewmember<br>Procedures | Not fully Mission Capable If: |
|---|---|---|---|---|
| 81 | Monthly | Final Drive | Driver<br>Check for oil leaks. If oil leaks are found, notify unit maintenance.<br>Remove level check plug (1). Oil should be level with bottom of opening. If not, lubricate per Appendix I. Clean and reinstall plug. Check for cracked or missing skid plates (2), loose, or missing screws (3). Notify unit maintenance.<br> 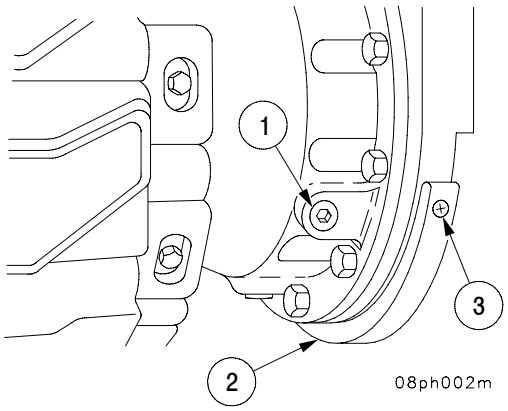 <br> | |
| 82 | Monthly | Spade | Gunner<br>Check operation of spade latches (1) in stowed position. Remove burrs from corners and spade face.<br>Make certain all spade components are present and that latches are secure and there are no broken weld joints.<br> 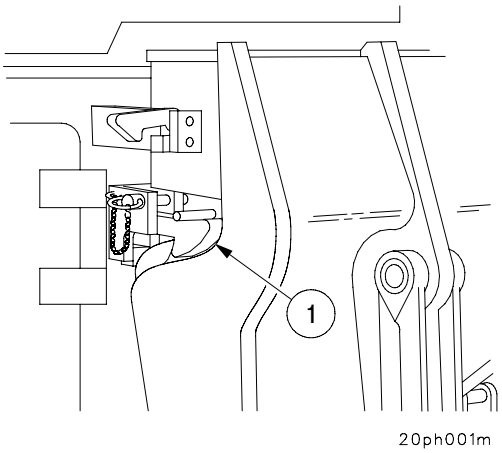 <br> | |

## TABLE 2-1. PREVENTIVE MAINTENANCE CHECKS AND SERVICES FOR HOWITZER, SELF-PROPELLED, M109A6 - CONTINUED

| Item No. | Interval | Location / Item To Check/Service | Crewmember Procedures | Not fully Mission Capable If: |
|---|---|---|---|---|
| 83 | Monthly | Muzzle Brake and Bore Evacuator Assembly Thrust Collar Setscrews | Chief of Section<br>**WARNING**<br>Failure to maintain bore evacuator properly will expose Crew to air contaminated with carbon monoxide, producing symptoms of headache, dizziness, loss of muscular control, apparent drowsiness, and coma. Permanent brain damage and death can result from severe exposure.<br>Inspect setscrew (1) holding the ball and spring in place. This setscrew must be staked to prevent loosening which will cause the bore evacuator and muzzle brake thrust collar to rotate. If this screw is not staked, notify unit maintenance.<br>**NOTE**<br>Setscrew (2) is removable to provide an access to release the ball lock. It should not be staked. | Staked setscrew is missing. |
| | | | 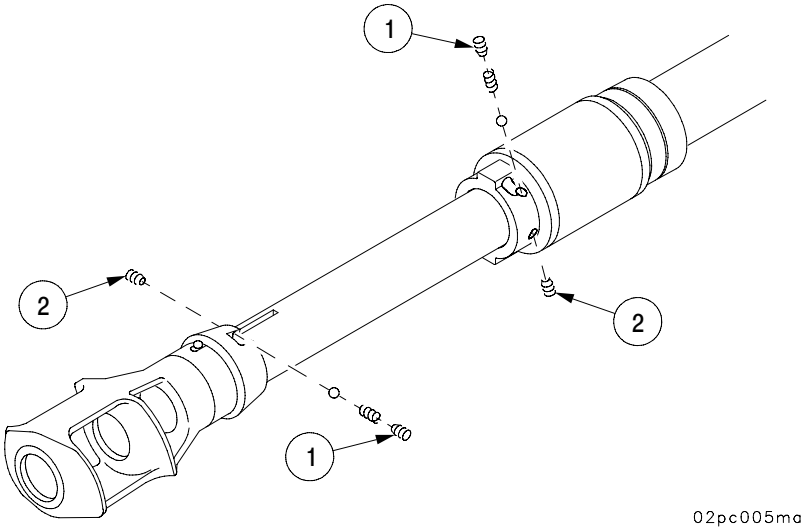 | |
| | | | To inspect locking ball and spring, remove unstaked screw and insert screwdriver in hole. Push against lock ball to see if ball moves around freely. If ball moves freely and there's no resistance from spring, notify unit maintenance. | |

## TABLE 2-1. PREVENTIVE MAINTENANCE CHECKS AND SERVICES FOR HOWITZER, SELF-PROPELLED, M109A6 - CONTINUED

| Item No. | Interval | Location<br>Item To Check/Service | Crewmember<br>Procedures | Not fully Mission Capable If: |
|---|---|---|---|---|
| 83 - Cont | Monthly | Muzzle Brake and Bore Evacuator Assembly Thrust Collar Setscrews - Continued | Chief of Section<br>**WARNING**<br>Failure to maintain bore evacuator properly will expose Crew to air contaminated with carbon monoxide, producing symptoms of headache, dizziness, loss of muscular control, apparent drowsiness, and coma. Permanent brain damage and death can result from severe exposure.<br>Inspect setscrew (1) holding the ball and spring in place. This setscrew must be staked to prevent loosening which will cause the bore evacuator and muzzle brake thrust collar to rotate. If this screw is not staked, notify unit maintenance.<br>**NOTE**<br>Setscrew (2) is removable to provide an access to release the ball lock. It should not be staked. | |

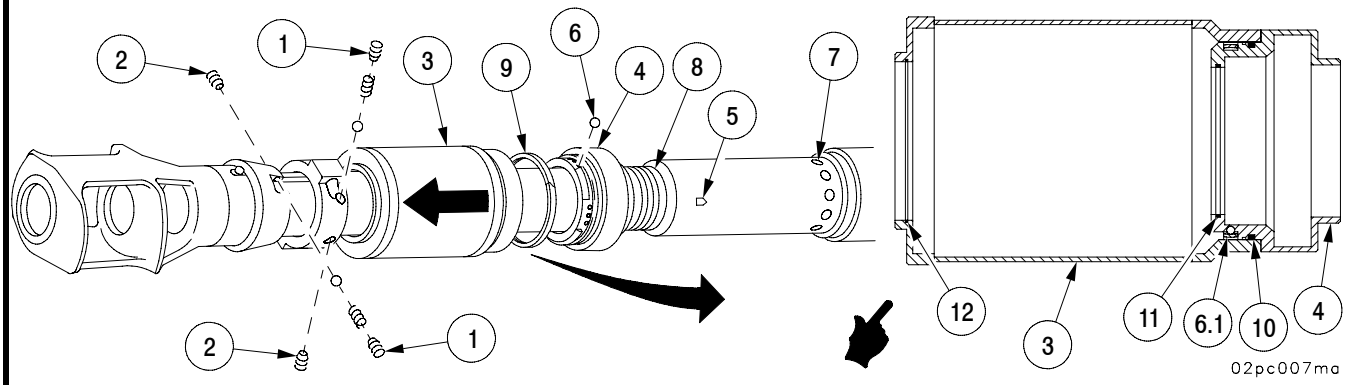


| | | | | |
|---|---|---|---|---|
| | | | Separate main reservoir (3) and prereservoir (4) (para 3-8.8). Inspect O-rings (preformed packings) (10 and 11) on the outer and inner grooves of prereservoir (4) and O-ring (12) on the inner groove of main reservoir (3) for damage or missing. Remove any soot from inside the main reservoir (3). Clean and lubricate three metering holes (5), nine evacuator balls (6), nine prereservoir orifices (6.1), 10 evacuator orifices (7), tube threads (8), and ring valve (9) (Appendix I).<br>**NOTE**<br>After installing setscrew (1), notify unit maintenance for torquing. | If any ball is missing. If either end O-ring (preformed packing) is damaged or missing, or if internal O-ring is damaged or missing, or signs of gas wash or soot past O-ring. |

## TABLE 2-1. PREVENTIVE MAINTENANCE CHECKS AND SERVICES FOR HOWITZER, SELF-PROPELLED, M109A6 - CONTINUED

| Item No. | Interval | Location / Item To Check/Service | Crewmember Procedures | Not fully Mission Capable If: |
|---|---|---|---|---|
| 84 | Monthly | Elevation Cylinder | Chief of Section<br>Elevate and depress cannon 3 times. Wipe down elevation cylinder (1). Elevate and depress cannon 25 times and observe the center vent hole (2) and the vent hole (3) on end of cylinder rod (4). Six drops of oil are permitted from each vent hole during this operation. | |

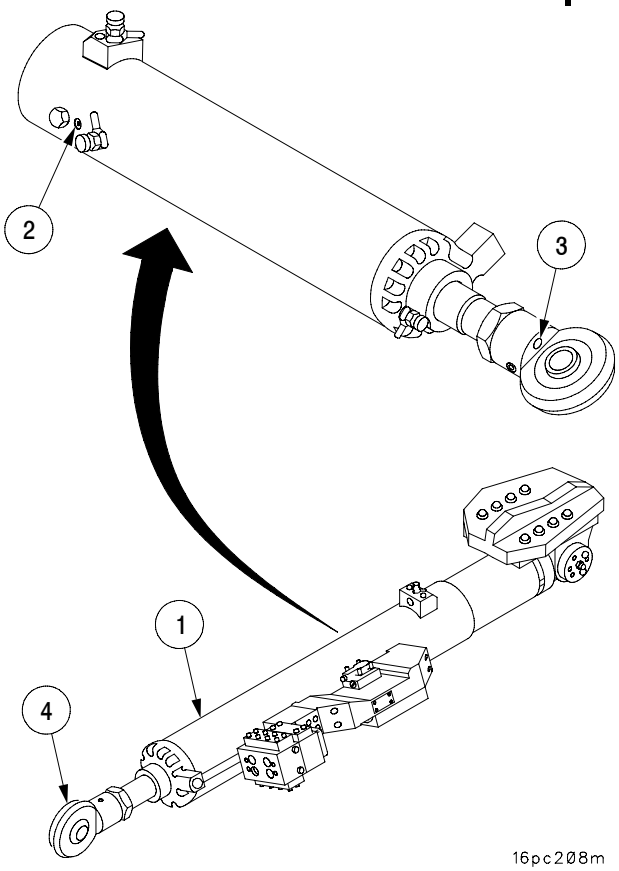

# Section III. OPERATION UNDER USUAL CONDITIONS

## 2-6 ASSEMBLY AND PREPARATION FOR USE.

Before operating a new or reconditioned vehicle, make sure unit maintenance services the vehicle.

## 2-7 INITIAL ADJUSTMENT AND DAILY CHECKS.

Performing the Preventive Maintenance Checks and Services (PMCS) in Section II before, during, and after operation makes sure that all adjustments and daily checks required for effective vehicle operation will be completed.

## 2-8 OPERATING PROCEDURES.

Familiarize yourself with all the controls, instruments, and procedures before attempting to operate the vehicle.

**WARNING**

- Be familiar with all driver's controls. The two stage accelerator is provided to compensate for variations in driver's seat height and in driver's physical characteristics. DO NOT mistake raised portion of accelerator for a brake. Failure to comply with this warning could result in injury or death to personnel.
- Protect your hearing. Hearing protection is required when operating the vehicle due to high intensity noise.
- Do not move vehicle unless the hatches and doors are secured and equipment is properly stowed.
- Fasten the seat belt. Drive carefully. Take it easy until you can operate with skill.
- If a track is thrown while operating vehicle, do not apply brake; coast to a stop.

## 2-8 OPERATING PROCEDURES - CONTINUED

**CAUTION**

- Never leave your vehicle unattended while engine is running.
- To prevent engine damage and overheating, set throttle control lever to run engine at 1000 to 1200 rpm on tachometer and run engine for a period of 5 minutes or until coolant temperature is 185°F or below, prior to shutdown.
- To prevent damage and overheating of engine and transmission when starting from a halt, begin with transmission in Range 1.
- To prevent transmission from overheating, do not hold howitzer on incline with transmission in gear.

Instructions and procedures for operating under unusual conditions are in Section IV.

### 2-8.1 Pre-Starting Instructions.

Check the controls before starting the vehicle. Be sure all the following have been done:

a. Before Operation PMCS.

**CAUTION**

Do not operate vehicle with cannon tube out of travel lock. Operation with cannon tube out of travel lock can cause serious damage to elevating and traversing system.

b. Cannon tube positioned in travel lock and jaw secured over cannon tube.

## 2-8 OPERATING PROCEDURES - CONTINUED

### 2-8.1 Pre-Starting Instructions - Continued

c. Cab traverse lock secured. Squeeze handles (1) and (2) together to rotate cab traverse lock to locked position. If you have trouble getting over positioning hole, manually traverse cab slightly left or right to align lock teeth with cab ring teeth.

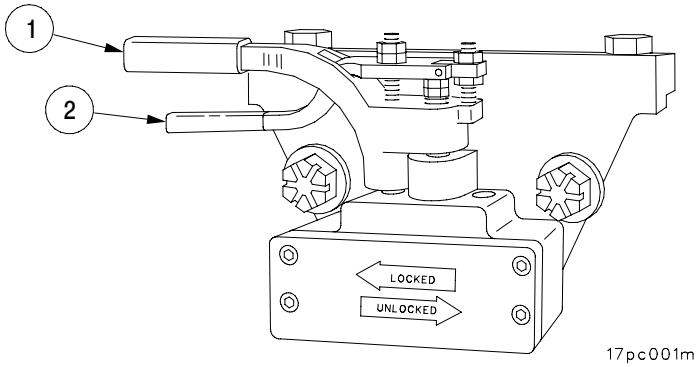


d. Deleted.

e. Driver's hatch must be locked either open or closed.

**WARNING**

Do not move vehicle if hatch will not lock. Failure to comply with this warning could result in injury or death to personnel.

(1) To close:

(a) Move hold-open lock release handle (3) forward.

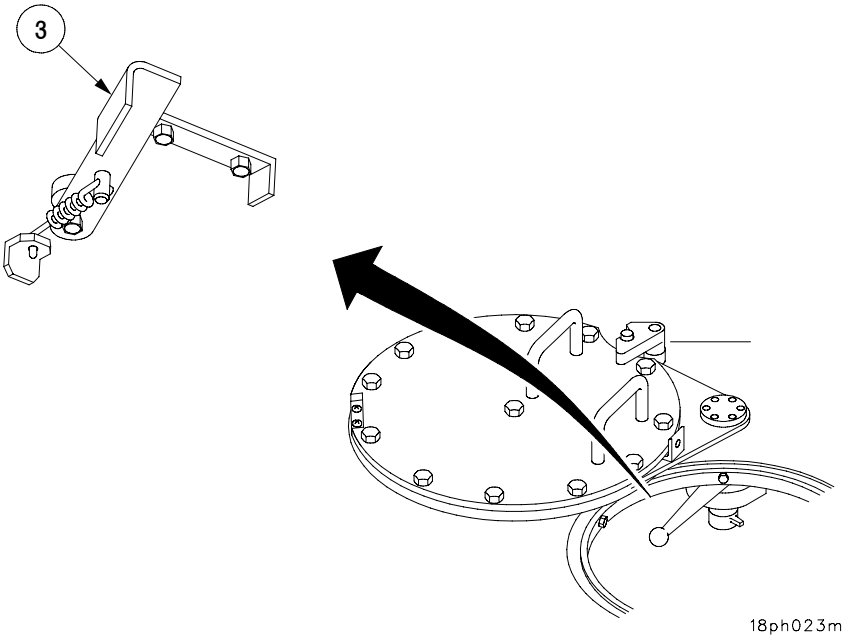

## 2-8 OPERATING PROCEDURES - CONTINUED

### 2-8.1 Pre-Starting Instructions - Continued

(b) Pull down and forward on hatch elevating lever (4).

(c) Tighten locking chuck (5) to lock hatch.

(d) Move locking handle (6) rearward to lock hatch cover lock (7).

(2) To open:

(a) Loosen locking chuck (5).

(b) Move locking handle (6) forward to release hatch cover lock (7).

(c) Pull down and rearward on hatch elevating lever (4). Hatch locks automatically.

(d) Make sure hatch is securely locked.

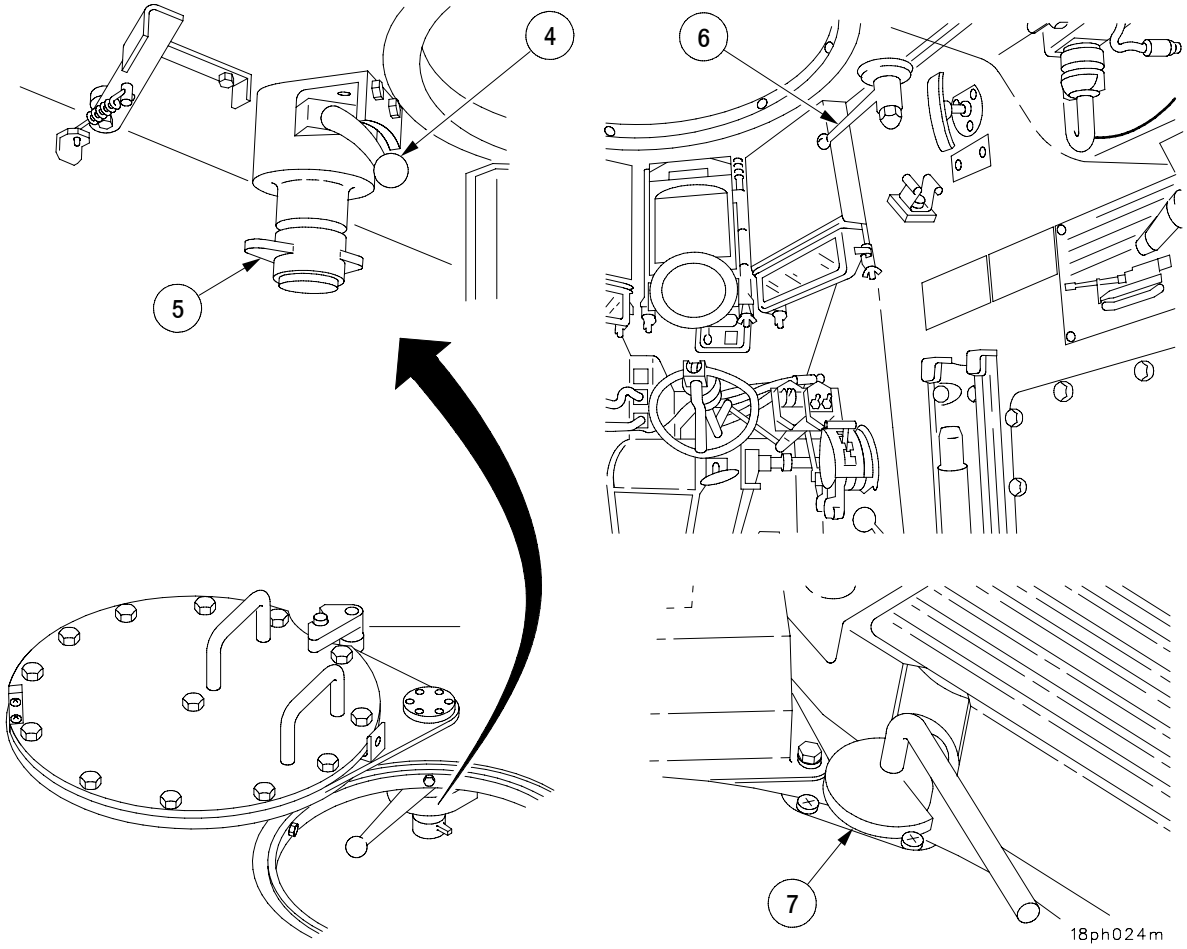

## 2-8 OPERATING PROCEDURES - CONTINUED

### 2-8.1 Pre-Starting Instructions - Continued

f. Adjust driver's seat as necessary.

**CAUTION**

To avoid damage to mechanism, do not apply full weight when lowering seat.

(1) Adjusting up and down. Hold seat down and pull up on adjusting lever (8). With lever raised, lift or press seat to obtain correct height. Release adjusting lever to lock in position.

(2) Adjusting forward and backward. Pull up on adjusting tab (9) and move seat forward or backward. Release adjusting tab to lock in position.

(3) Backrest positioning. Press pawl (10) and rotate backrest up and back. When backrest is positioned vertically, reposition pawl to lock backrest.

(4) Adjusting backrest height. Remove quick-release pin (11) and lower or raise backrest. When desired height is obtained, install quick-release pin in adjusting holes.

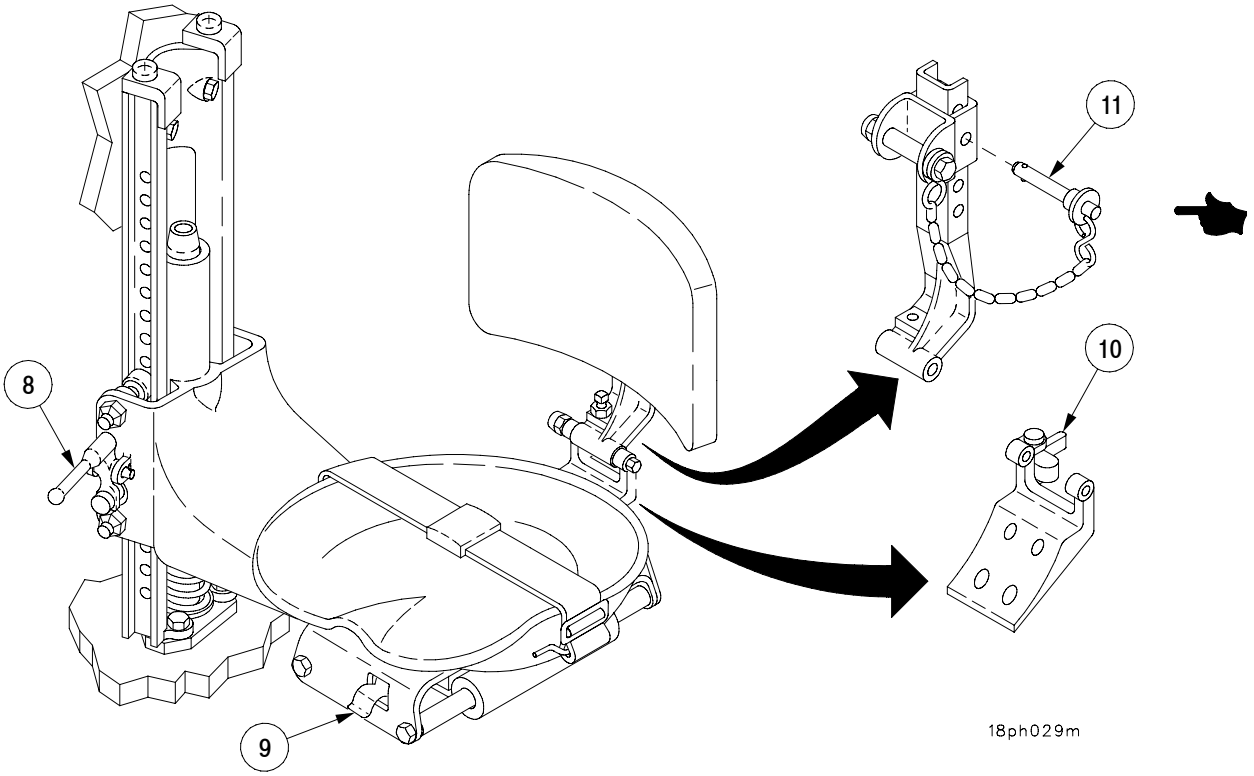

## 2-8 OPERATING PROCEDURES - CONTINUED

### 2-8.1 Pre-Starting Instructions - Continued

**CAUTION**

Do not raise steering wheel with night viewer installed. Damage to night viewer may result.

g. Adjust steering wheel by pressing sleeve bearing (12) forward and rotating steering wheel up or down. Raise wheel if driving with hatch open; lower wheel when driving with hatch closed. When correct adjustment is obtained, release sleeve bearing to lock position.

h. Instrument panel must be left inside except during maintenance.

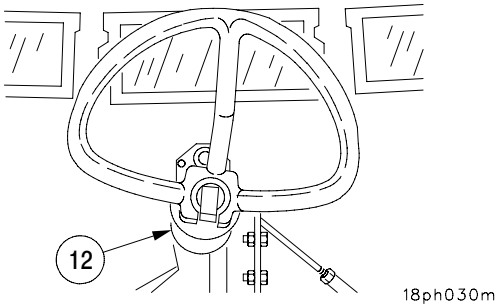

## 2-8 OPERATING PROCEDURES - CONTINUED

### 2-8.2 Starting Engine.

a. Set vehicle brake by pressing down on service brake pedal (1), pull out and down on BRAKE lock handle (2); then release handle (2) to set brake.

b. Shift transmission selector lever (3) into N (neutral).

**CAUTION**

Batteries will not be charged if voltage regulator circuit breaker switch is not in the UP position.

c. Ensure generator voltage regulator circuit breaker switch (4) is in the UP position.

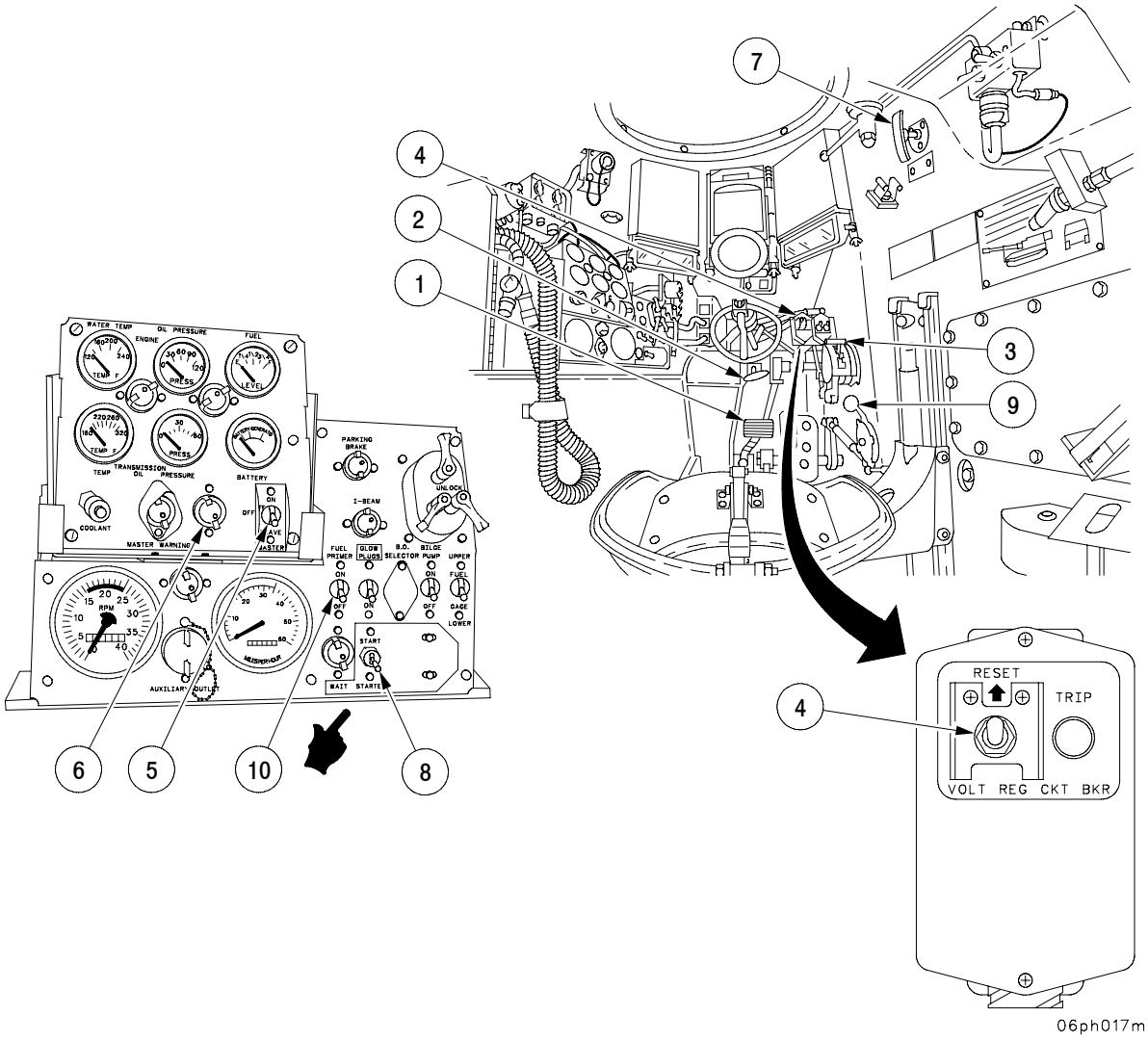

## 2-8 OPERATING PROCEDURES - CONTINUED

### 2-8.2 Starting Engine - Continued

d. Turn MASTER switch (5) to ON. Indicator lamp (6) will illuminate.

e. Pull out FUEL SHUTOFF handle (7) (to OFF position) before checking for hydrostatic lock.

**CAUTION**

Before starting engine, check for hydrostatic lock.
The following are indications of hydrostatic lock:

- Engine starts to turn over with starter, then stops.
- Starter sounds as if straining when cranking engine.
- Engine seems to bind. If you suspect a hydrostatic lock, stop cranking immediately and notify unit maintenance.

f. Check for hydrostatic lock by intermittently actuating STARTER switch (8).

g. Push FUEL SHUTOFF handle (7) in.

h. Place throttle control lever (9) in IDLE position.

i. If fuel filters have been drained, turn on FUEL PRIMER switch (10). Hold for 45 seconds and release.

**WARNING**

Protect your hearing. Due to high intensity noise, hearing protection is required when operating the vehicle.

**CAUTION**

Do not operate starter over 5 seconds. If engine fails to start, wait 10 seconds before engaging starter again. Damage to starter may result.

## 2-8 OPERATING PROCEDURES - CONTINUED

### 2-8.2 Starting Engine - Continued

**NOTE**

A functional check of the glow plug system must be performed whenever operation in ambient temperatures below 50°F is anticipated and after any maintenance on the glow plug system is performed.

j. Push GLOW PLUG switch (11) to ON position. Glow plug WAIT lamp (12) will light.

(1) At temperatures above 50° F, the WAIT lamp (12) will flash on for 1 second and turn off when the GLOW PLUG switch (11) is turned on.

(2) At temperatures below 50° F, the WAIT lamp (12) will turn on for 35 seconds and then flash on/off for another minute and turn off.

k. If the glow plug WAIT lamp (12) does not turn on as indicated in Step 2, notify unit maintenance.

**NOTE**

A manual override for glow plug equipped engines is used in emergencies only, as determined by the chief of section. Manual override is affected by holding on continually the spring-loaded GLOW PLUG switch. Do not hold manual override switch on for more than 2 minutes.

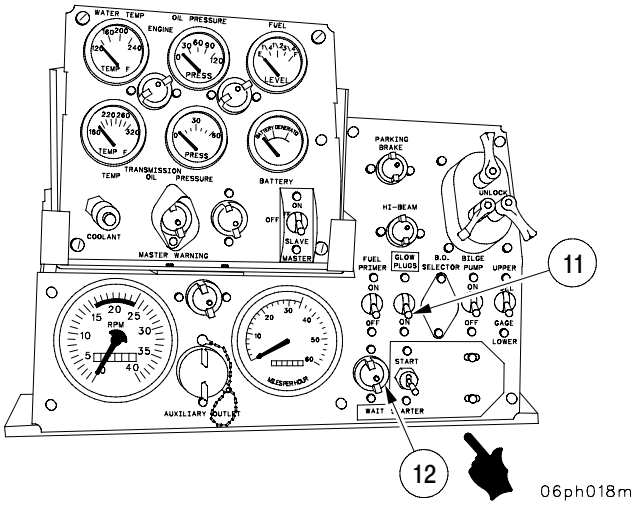

## 2-8 OPERATING PROCEDURES - CONTINUED

### 2-8.2 Starting Engine - Continued

**NOTE**

Starter protection device in engine compartment will disengage starter under the following conditions:

- After 30 seconds in temperatures above 50°F.
- After 60 seconds in temperatures between 0°F and 50°F.
- After 120 seconds in temperatures below 0°F.
- Engine speed is high (engine has started).
- Engine speed is low (low voltage).

l. Push engine STARTER switch (8) to START position and hold for 2 or 3 seconds, but not more than 5 seconds until engine starts. If engine starts within four attempts, skip step (m) and go to step (n).

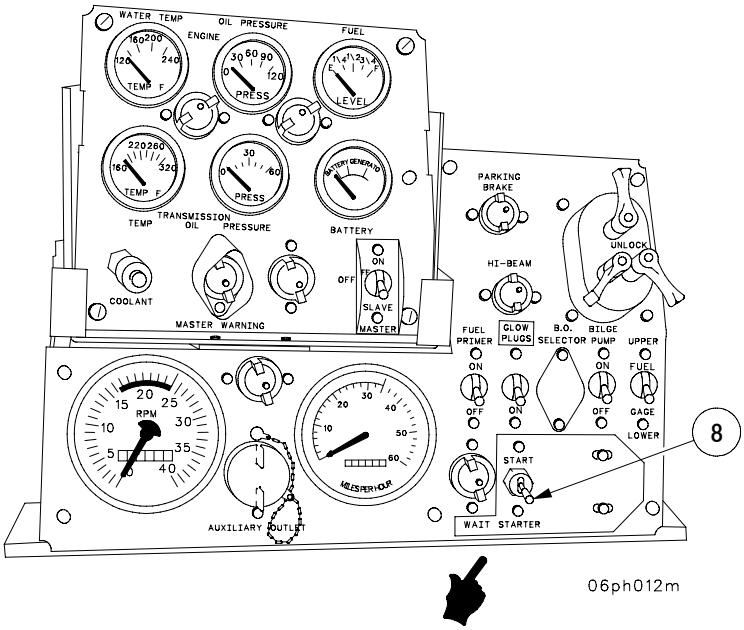

## 2-8 OPERATING PROCEDURES - CONTINUED

### 2-8.2 Starting Engine - Continued

**CAUTION**

Starter protection override switch is to be used in emergencies only, as determined by chief of section. Excessive use of a starter protection override switch could result in damage to starter.

m. If engine does not start in four attempts, engage starter protection override switch (13) as determined by the chief of section. If engine still does not start, notify unit maintenance.

**CAUTION**

If you notice a shrill whine above normal turbine whine, rubbing, unusual vibrations and a sudden increase in exhaust smoke, shut off engine and notify unit maintenance.

n. With engine running, watch your ENGINE OIL PRESSURE gage (14). If engine oil pressure does not register within 15 seconds (approximately 5 to 30 psi at idle of 550-600 rpm) immediately pull FUEL SHUTOFF handle (7) and stop engine. Notify unit maintenance.

o. Idle engine about 2 minutes. Adjust hand throttle control lever (15) and set to 1000 rpm (fast idle) on tachometer (16). Warm up engine until water temperature gage (17) reaches 170°F.

p. During engine warm up, perform portable instrument panel checkout procedure (para 2-8.4).

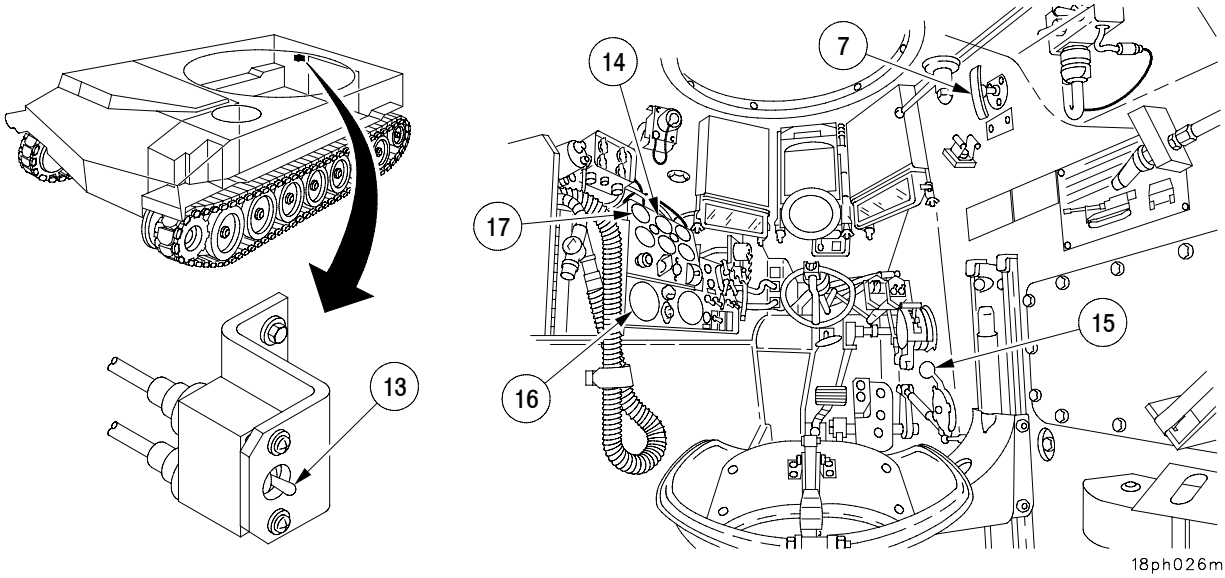

## 902-8 OPERATING PROCEDURES - CONTINUED

### 2-8.3 Starting Disabled Vehicle.

For tow starting, refer to para (2-8.12.3).

a. Check batteries for damage. Notify unit maintenance if batteries are damaged.

b. Check electrolyte level (TM 9-6140-200-14). Notify unit maintenance if electrolyte is not at proper level.

**WARNING**

- Do not park M992 in front of disabled vehicle. Personnel injury or damage to vehicles could occur if vehicle drifts forward.
- Do not allow vehicles to touch. Allow enough space between them to permit working room. Shorted circuits could allow electricity to flow through vehicles, causing injury to personnel and/or damage to equipment.

c. Park vehicles in a side-by-side position.

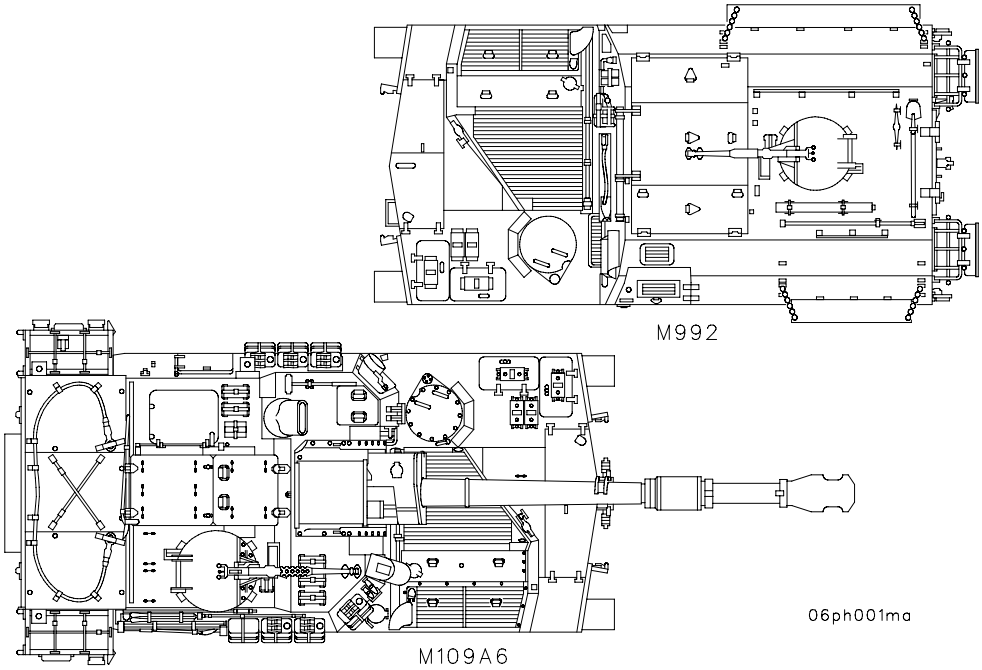

## 2-8 OPERATING PROCEDURES - CONTINUED

### 2-8.3 Starting Disabled Vehicle - Continued

d. Place both vehicles' shift levers (1) in N (neutral) position.

e. Set parking brakes (2) on both vehicles.

**CAUTION**

Make sure all electrical equipment and all switches are off in both vehicles to prevent damage to the electrical system.

f. Place vehicle MASTER switch (3) in OFF position.

g. Place all electrical switches in OFF position in the driver's (4) and portable (5) instrument panels on both vehicles.

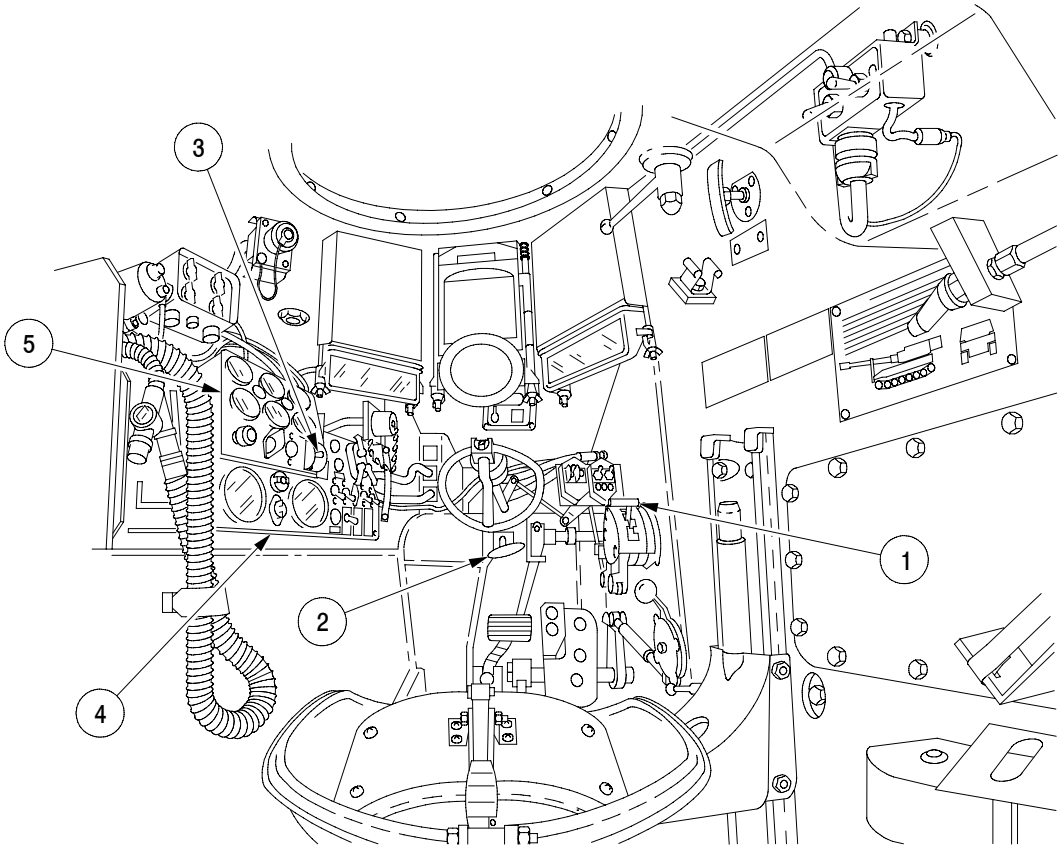


18ph027m

## 2-8 OPERATING PROCEDURES - CONTINUED

### 2-8.3 Starting Disabled Vehicle - Continued

h. Attach slave cable (6) securely to slave receptacle (7) in both vehicles.

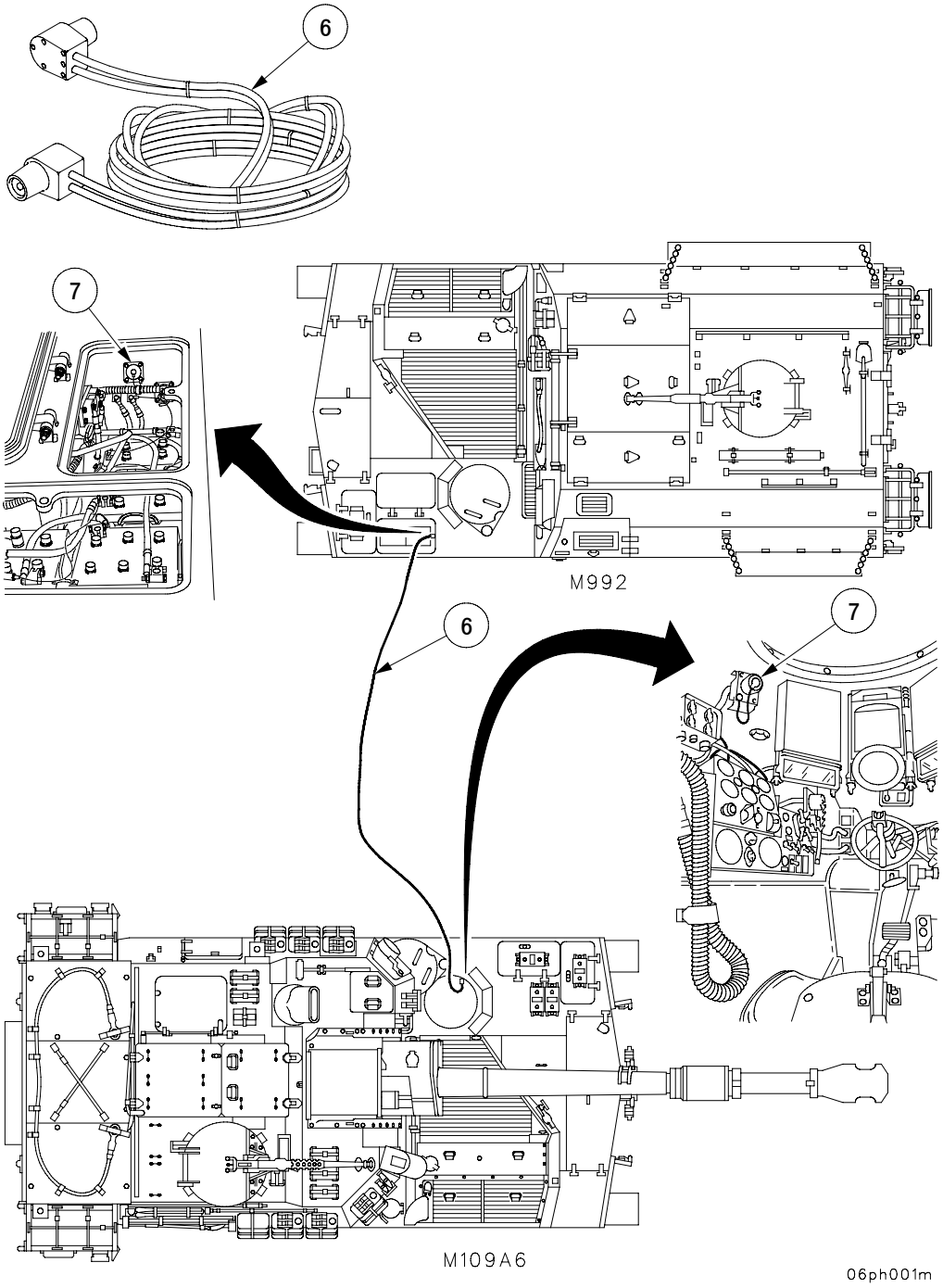

## 2-8 OPERATING PROCEDURES - CONTINUED

### 2-8.3 Starting Disabled Vehicle - Continued

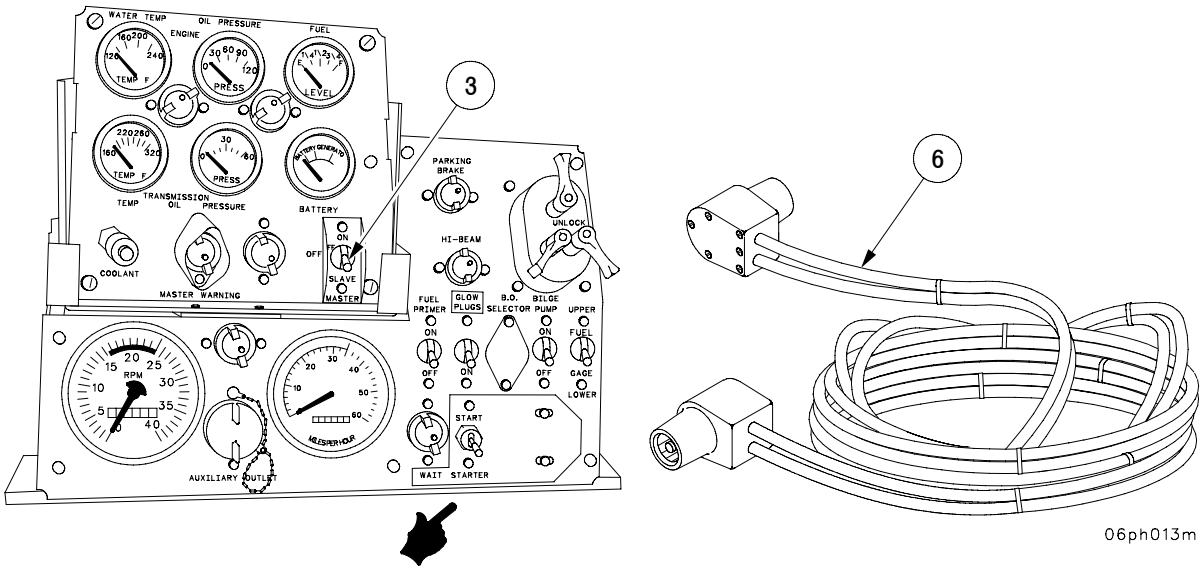


**WARNING**

Make sure vehicle MASTER switches are OFF in both vehicles after vehicles are fully charged.

i. Place vehicle MASTER switch (3) to OFF position on dead vehicle.

j. Place vehicle MASTER switch to ON in live vehicle and run engine at 1000 to 1200 rpm.

k. Allow batteries in dead vehicle to charge for 5 minutes before trying to start the engine.

l. Idle engine of live vehicle and move vehicle MASTER switch to SLAVE position.

m. Start up dead vehicle.

n. After engine in disabled vehicle is running smoothly, turn OFF vehicle MASTER switch (3).

o. Disconnect slave cable (6) from both vehicles.

p. Turn both vehicle MASTER switches (3) ON again.

**NOTE**

After disconnecting slave cable, run both engines at 1000 rpm to stabilize generators (alternators) and charge batteries.

## 2-8 OPERATING PROCEDURES - CONTINUED

### 2-8.4 Portable Instrument Panel Checkout Procedures.

a. MASTER WARNING light (1). Should go out after the engine has run for 15 seconds.

b. ENGINE OIL PRESSURE gage (2). Normal range is a minimum of 5 psi at idle (650 rpm), 30 to 50 psi at 1800 rpm, and 50 to 70 psi at 2100 rpm (maximum is 70 psi).

**CAUTION**

If oil pressure is below 5 psi at idle (650 rpm) or below 30 psi at 1800 rpm, shutdown engine and check oil level.

c. TRANSMISSION OIL PRESSURE gage (3). Normal range is 18 to 45 psi at 1835 to 1900 rpm. (Minimum is 10 psi at 1000 rpm.)

(1) If ENGINE OIL PRESSURE gage (2) or TRANSMISSION OIL PRESSURE gage (3) is low, stop engine and check oil level.

(2) If ENGINE WATER TEMP gage (4) or TRANSMISSION OIL TEMP gage (5) is high, set throttle to run engine at 1000 to 1200 rpm. If gages do not return to normal after 5 minutes, stop engine and check coolant level (para 3-7.1.1).

(3) If MASTER WARNING light (1) stays on, notify unit maintenance.

d. Two panel lights (6). Illuminate portable instrument panel.

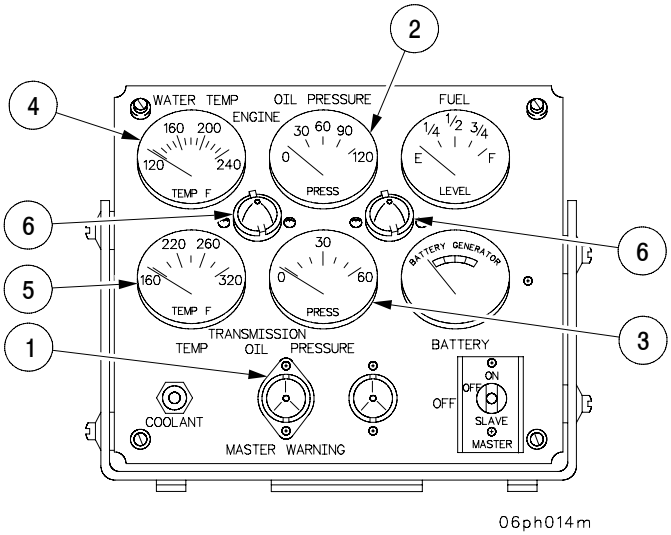

## 2-8 OPERATING PROCEDURES - CONTINUED

### 2-8.4 Portable Instrument Panel Checkout Procedures - Continued

e. FUEL gage (7). Indicates fuel quantity available in either tank. Use FUEL GAGE switch (8) to select tank.

f. BATTERY-GENERATOR indicator gage (9). Indicates battery status. Normal range is GREEN.

g. TRANSMISSION OIL TEMP gage (5). Normal range is 220°F to 240°F. (Maximum is 300°F.)

h. ENGINE WATER TEMP gage (4). Normal range is 170°F to 185°F. (Maximum is 230°F.)

**WARNING**

Do not remove radiator cap when engine is hot. Severe burns could result from failure to observe this warning.

i. COOLANT level indicator (10). Indicates coolant level in cooling system is low. Shut engine down and check coolant level.

j. MASTER switch (11). Move to ON position to start engine. When MASTER switch is ON, master indicator light (12) is illuminated.

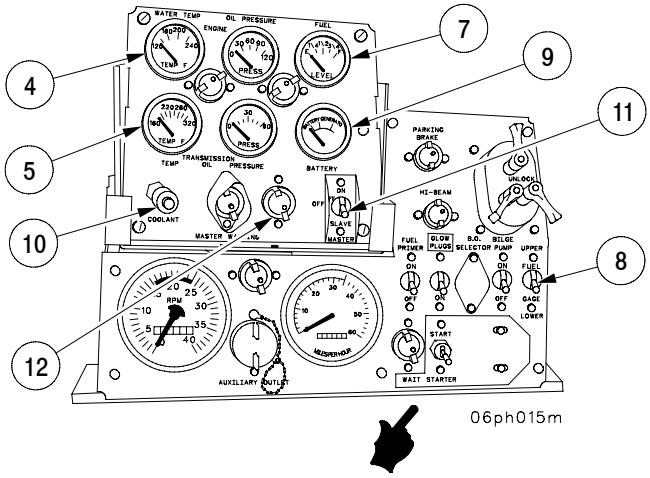


### 2-8.5 Dome Lights.

a. Turn MASTER switch ON.

b. Blue light on. Turn lever fully counterclockwise.

c. White light on. Press safety latch (1) and turn switch lever (2) clockwise past stop.

d. Both lights off. Position switch lever (2) in center.

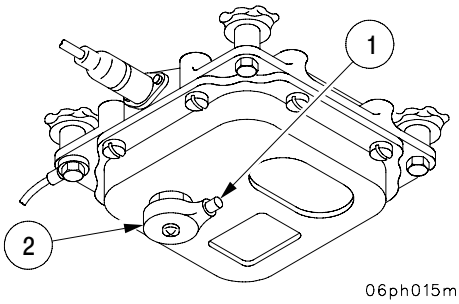

## 2-8 OPERATING PROCEDURES - CONTINUED

### 2-8.6 Light Switch Assembly.

The panels below show which lights are turned on by the different positions of the main light switch.

a. Turn MASTER switch ON.

b. Push up safety switch (1) to release main light switch (2). Release safety switch after main light switch is properly positioned.

c. Push up on instrument panel light switch (3) to turn on instrument panel lamps.

**NOTE**

Infrared lights and the right Blackout Drive Light are disconnected on M109A6.

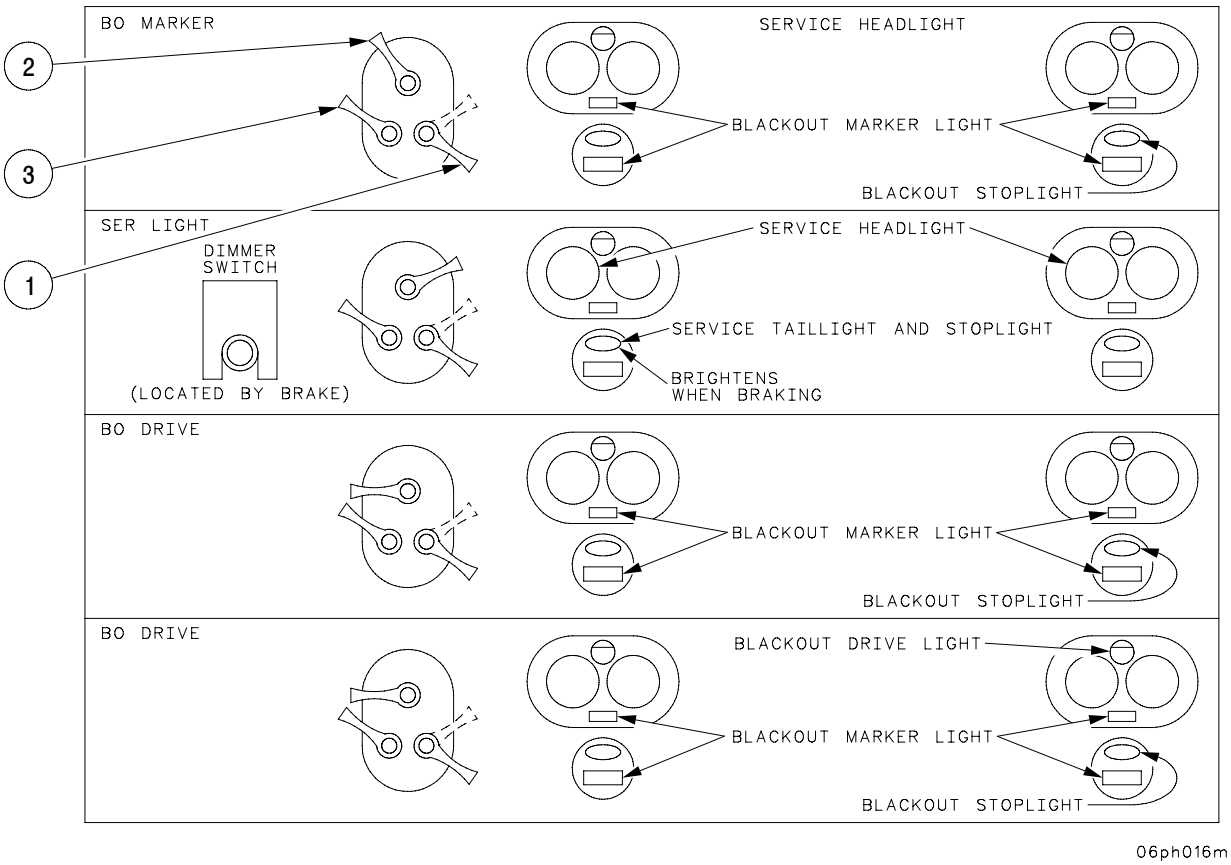


06ph016m

## 2-8 OPERATING PROCEDURES - CONTINUED

### 2-8.7 Transmission Shift Selection.

**NOTE**

- The transmission is equipped with a shift inhibitor which will restrict downshifting of the transmission until vehicle speed drops within the correct operating limits of the desired gear or range.
- Apply brakes to prevent vehicle speed from overrunning engine speed while downshifting.

a. Neutral (N).

**CAUTION**

- Never descend an incline with transmission in neutral.
- Do not hold vehicle on incline with transmission in gear; instead, lock brake and shift transmission to neutral.

Use when:

(1) Stopped/parked.

(2) Engine starting/engine shutdown.

(3) Idling.

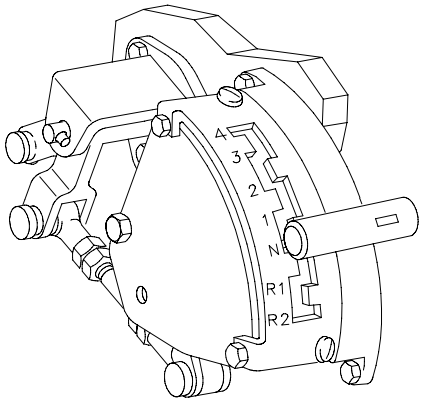


07ph001m

# 2-8 OPERATING PROCEDURES - CONTINUED

## 2-8.7 Transmission Shift Selection - Continued

b. 1st gear (1).

Use when:

(1) Setting vehicle in forward motion during field operation. Upshift to a higher gear when vehicle speed permits.

(2) Ascending or descending steep grades and on soft, muddy, or rough terrain.

(3) Making short forward radius turns. Short radius turns on hard surfaces should be initiated from a standstill. (Maximum speed is 6 mph.)

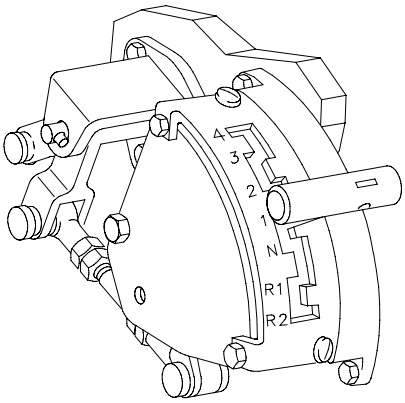


07ph002m

c. 2nd gear (2).

Use when:

(1) Towing heavy loads.

(2) Ascending or descending steep grades and on extremely muddy or rough terrain.

(3) Making short forward radius turns. (Maximum speed is 9 mph.)

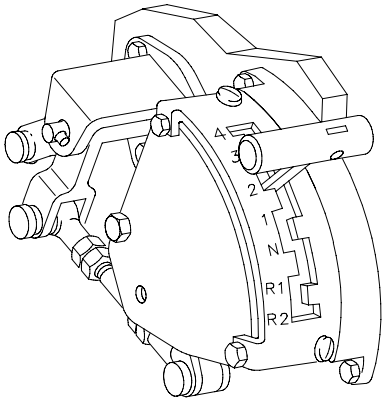


07ph003m

## 2-8 OPERATING PROCEDURES - CONTINUED

### 2-8.7 Transmission Shift Selection - Continued

d. 3rd gear (3).

Use when:

(1) Operating on hard surfaced roads until sufficient vehicle speed (12 to 15 mph) permits shifting to fourth (4) gear.

(2) Pulling heavy loads for sustained periods and for ascending or descending on long grades (maximum speed is 24 mph).

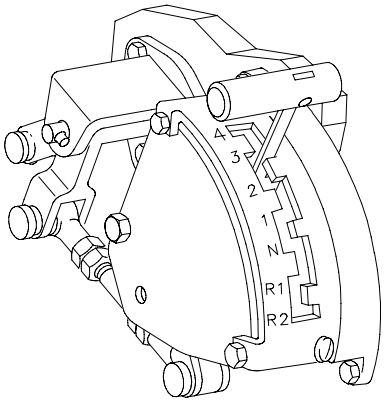


07ph004m

e. 4th gear (4).

Use when:

Normal driving conditions are on firm, smooth, level ground. (Maximum speed is 38 mph.)

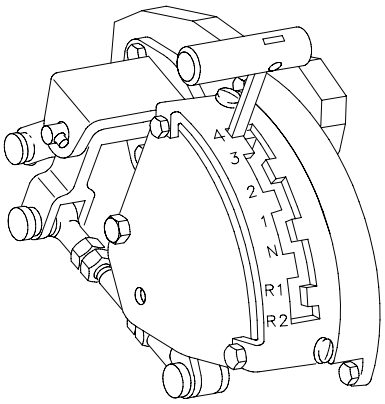


07ph005m

## 2-8 OPERATING PROCEDURES - CONTINUED

### 2-8.7 Transmission Shift Selection - Continued

f. Reverse-Range 1 (R1).

**CAUTION**

Never attempt to shift into reverse range unless the vehicle is at a dead stop and the engine is operating at idle rpm.

Use when:

(1) Backing up (para 2-8.11).

(2) Making turns with heavy loads or on soft ground.

(3) Ascending steep grades in rearward movement for maximum engine power. (Maximum speed is 5 mph.)

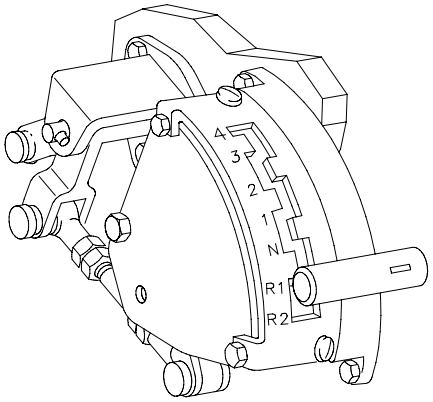


07ph006m

g. Reverse-Range 2 (R2).

Use when:

On level, hard surfaces when rearward movement for long distance is necessary. (Maximum speed is 7 mph.)

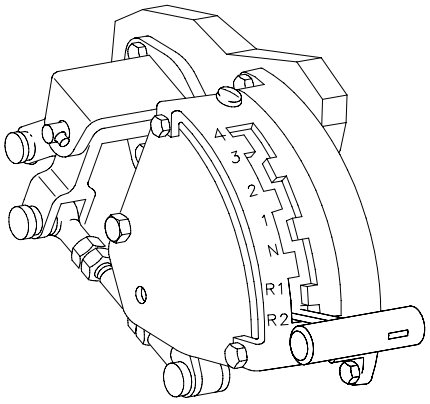


07ph007m

## 2-8 OPERATING PROCEDURES - CONTINUED

### 2-8.8 Driving.

**WARNING**

- Be sure driver's hatch is locked either in the open or closed position.
- Drive carefully, especially if you're not familiar with the vehicle. Avoid oversteering and speeding on hard pavement; you could lose control of vehicle.
- When backing the howitzer, two personnel must guide the driver. Both guides stand to the left a safe distance from the vehicle. Front left guide must be visible to the driver.
- When maneuvering vehicle within 10 feet of a heavy or immovable object, ground guide must not get between vehicle and object.
- When backing vehicle, steering works in opposite direction from normal.

**CAUTION**

- Transmission must be shifted manually.
- When starting from a halt, begin with transmission in 1st gear to prevent damage and overheating of engine and transmission.
- Do not leave driver's compartment with engine running (except during firing).
- When starting on a hill, depress brake and place transmission in 1st gear position, increase engine speed and release brake.
- Don't hold vehicle on an incline with the accelerator or the transmission will overheat.
- Downshift before going down steep hills.

## 2-8 OPERATING PROCEDURES - CONTINUED

### 2-8.8 Driving - Continued

**CAUTION**

- Safely backing the howitzer requires special precautions. For backing the howitzer, follow the procedure detailed in para 2-8.11.
- If you throw a track while driving, do not use the brake. Take foot off of the accelerator and coast to a stop.
- When engine rpm is less than 1725, shift to a lower gear.

a. Press down on brake pedal (1). Lift up and push in brake lock handle (2) to release hand brake.

b. With brake pedal (1) depressed and hand throttle control lever (3) in the idle position, move shift selector (4) from neutral (N) to 1st gear.

c. Release brake pedal (1) and push down on accelerator pedal (5) to obtain desired vehicle speed. Shift through intermediate gears to desired speed range (para 2-8.7).

d. To turn your vehicle, turn steering wheel (6).

e. While driving, check your tachometer (7) and gages on portable instrument panel (8).

f. Do your during operation PMCS (Table 2-1).

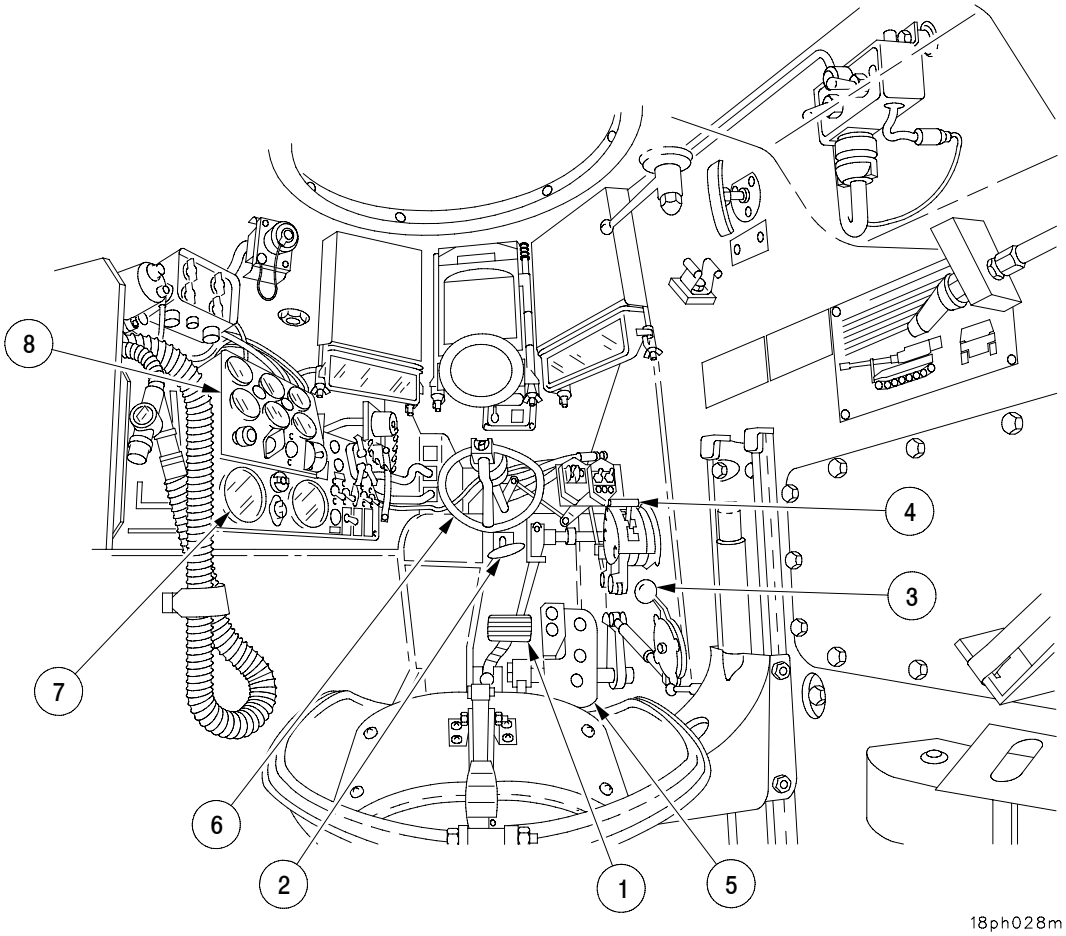

## 2-8 OPERATING PROCEDURES - CONTINUED

### 2-8.9 Driving Over Rough, Soft or Hilly Terrain.

**WARNING**

Approach an obstruction or obstacle head on when possible. Warn crewmembers to brace themselves. Secure hatches and doors.

2-8.9.1 Crossing a Ditch, Shell Hole, or Trench.

a. Apply brakes and put transmission selector into low (1st) gear. Maximum trench crossing width is 72 in. (1.83 m).

b. As soon as the vehicle reaches the bottom and starts to climb, depress the accelerator for power needed to climb out of the ditch.

2-8.9.2 Going Over an Obstacle.

a. As you approach an obstacle (21-inches maximum vertical height), release the accelerator, apply the brake, and shift to low (1st) gear.

b. Starting over the obstacle, apply full power. Release the accelerator pedal on reaching the crest and permit vehicle to settle over it. Balance vehicle forward of crest so it begins to move down.

c. When front of tracks touch ground, add power and move on.

2-8.9.3 Starting Vehicle on an Upgrade.

When the vehicle is headed uphill, apply power before releasing the brake to avoid rolling backward.

2-8.9.4 Going Down Steep Grades.

**CAUTION**

- Do not use engine as a braking source for a long period of time. Transmission will overheat.
- Using the service brakes too long will burn them out. Release and apply brakes occasionally to cool them off.

Before going down a steep hill, shift transmission into 1st gear. Apply the brake periodically to help slow down.

## 2-8 OPERATING PROCEDURES - CONTINUED

### 2-8.9 Driving Over Rough, Soft or Hilly Terrain - Continued

2-8.9.5 Turning in Sand, Dirt, or Rocks.

**CAUTION**

Making sharp turns in 1st gear may cause a track to be thrown.

When turning in sand, shift to 1st gear and make gradual turns. If you make sharp turns in 1st gear, the track may be thrown.

### 2-8.10 Stopping the Vehicle.

a. Release accelerator pedal (1). Slowly depress brake pedal (2) until vehicle stops.

b. With brake pedal (2) depressed, move shift lever (3) into Neutral. Pull out and down on parking brake lock handle (4). Release brake pedal (2).

**CAUTION**

Failure to observe shutdown procedures may result in engine failure.

c. Set throttle control lever (5) to run engine at 1000 to 1200 rpm on tachometer (6). Run engine for a period of 5 minutes or until coolant temperature is 185°F or less.

d. Set throttle lever (5) forward to return engine to normal idle (550 to 600 rpm).

e. Turn off all communication and accessory switches.

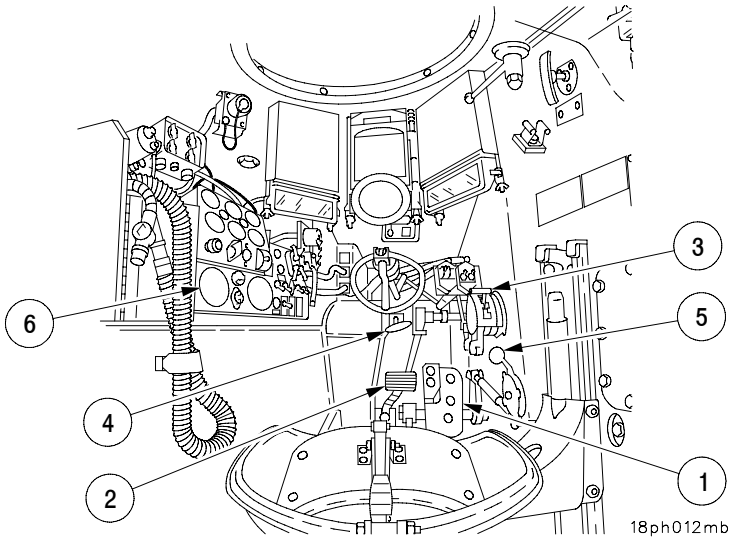

## 2-8 OPERATING PROCEDURES - CONTINUED

### 2-8.10 Stopping the Vehicle - Continued

f. Pull out FUEL SHUTOFF control handle (7) to stop engine.

**NOTE**

If engine doesn't stop, proceed to step g.

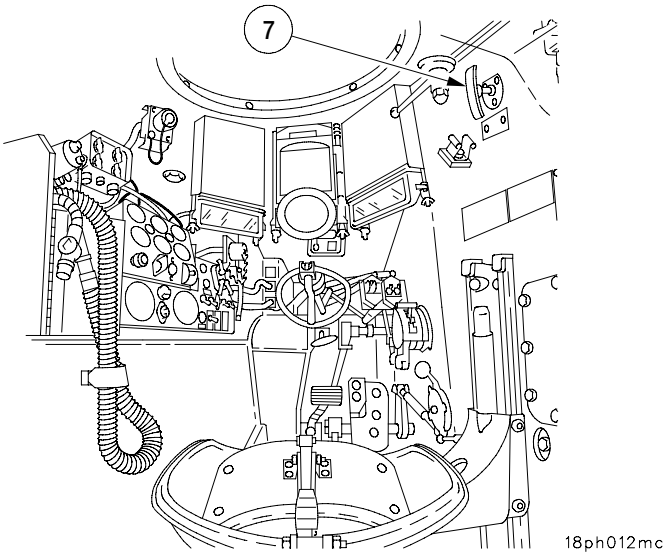


g. Disconnect the main fuel inlet line at quick-disconnect connection (8) at primary fuel filter in engine compartment. Notify unit maintenance.

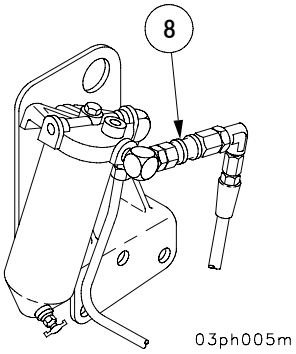


h. Turn MASTER switch to OFF.

**NOTE**

After daily operations, fill the fuel tanks to prevent condensation. Use DIESEL FUEL only.

i. Do your after operation PMCS (Table 2-1).

## 2-8 OPERATING PROCEDURES - CONTINUED

### 2-8.11 Backing the Howitzer.

**WARNING**

- When backing the howitzer, two personnel must guide the driver. Both guides stand to the left a safe distance from the vehicle. Front left guide must be visible to the driver.
- When maneuvering vehicle within 10 feet of a heavy or immovable object, ground guide must not get between vehicle and object.
- When backing vehicle, steering works in opposite direction from normal.

a. To prepare for backing the howitzer, driver is seated at controls, looking to the left of the vehicle. Cannoneer stands to the left and front of the vehicle, visible to both the driver and chief of section. The chief of section stands to the left and rear of the vehicle, visible to cannoneer.

b. Chief of section signals cannoneer on direction and distances for safe backup. Cannoneer relays signals to the driver.

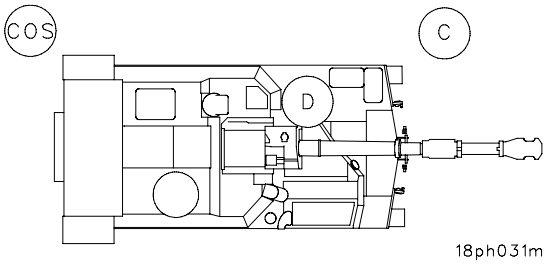


### 2-8.12 Towing Operations.

**WARNING**

- Vehicle engines must be shut off and brakes applied while tow cables are being connected or disconnected.
- An observer must be used to assist the driver when rigging the vehicle and during towing operations.
- When hooking or unhooking towbar from a disabled vehicle, set parking brake or chock tracks of disabled vehicle before hooking or unhooking towbar.

## 2-8 OPERATING PROCEDURES - CONTINUED

### 2-8.12 Towing Operations - Continued

**WARNING**

- If towed vehicle is not chocked, or parking brake not set, disabled vehicle may move causing injury or death to personnel and/or damage to equipment.
- Towing vehicle to start engine should be done on straight, smooth surface. Failure to do this may cause towed vehicle to lose control resulting in injury or death to personnel.

**CAUTION**

- The howitzer is authorized to tow only one vehicle at a time and to tow only when another vehicle is disabled, or when towing to start the engine.
- In an emergency, you can tow a vehicle for a short distance (not more than a mile) without removing universal joints. Put shift lever of towed vehicle in neutral position before starting towing operation. Do not exceed 10 mph. Proceed, being extra careful not to shift towed vehicle into gear accidentally.
- Vehicle must be towed backwards to keep the cannon from banging into the towing vehicle.

2-8.12.1 Towing Preparation.

**CAUTION**

- When universal joints are disconnected, you can not steer or brake.
- Tow cables may be used to tow a disabled vehicle short distances on fairly level terrain ONLY when brakes are operational. When towing a vehicle, there is a danger the towed vehicle will overrun the towing vehicle.
- Make sure tow cables are crossed to prevent damage to track.
- Tow pintle must not be used to position or push vehicle sideways.
- If using a tow bar while towing a howitzer, leaving storage baskets secured in the rear position may cause damage to storage baskets or tow vehicle.

# 2-8 OPERATING PROCEDURES - CONTINUED

## 2-8.12 Towing Operations - Continued

Remove universal joint assemblies:

**NOTE**

To remove the right universal joint, the speedometer/VMS angle drive adapter must be removed from the transmission.

a. Disengage travel lock and place in maintenance position (para 2-8.19.3).

b. Open transmission access doors (para 2-8.14.9).

c. Remove lockwire (1) and one screw (2) from each annular clamp (3).

d. Remove annular clamps (3). Slide final drive input flange (4) toward drive housing.

e. Remove each universal joint assembly (5).

f. When using a tow bar, storage baskets must be in forward position prior to towing (para 2-8.14.3).

**NOTE**

- When towing the howitzer with a tow bar, storage baskets must be secured in the forward position to avoid damage from contact between the storage baskets and the tow vehicle during turns.
- If the towed vehicle requires additional side clearance in a tight area or is being towed in a wide arc, the storage baskets may be secured in the rear position provided a ground guide is used during towing.

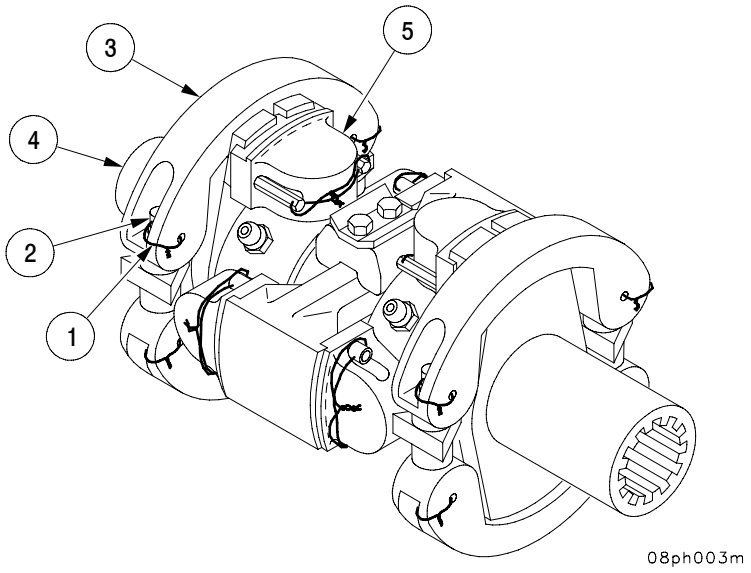

## 2-8 OPERATING PROCEDURES - CONTINUED

### 2-8.12 Towing Operations - Continued

2-8.12.2 Towing a Disabled Vehicle With Tow Cables.

**CAUTION**

When a disabled vehicle is being towed, vehicles must be rear to rear to prevent damage to cannon of towed vehicle.

a. Install tow cables as shown below.

TOW CABLE INSTALLATION

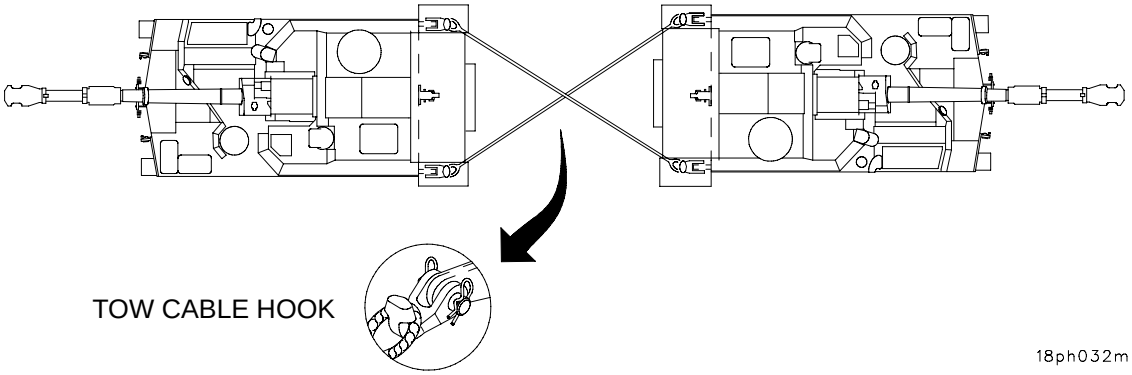


b. Shift towed vehicle into neutral.

c. Release brake of towed vehicle and signal observer.

## 2-8 OPERATING PROCEDURES - CONTINUED

### 2-8.12 Towing Operations - Continued

2-8.12.3 Towing a Vehicle to Start Engine.

**CAUTION**

When towing, be sure to steer in a wide arc to avoid collision when turning.

**NOTE**

Use the following procedure only in case of emergency or as a last resort.

a. Traverse cab 3200 mils to keep tube from banging into the towing vehicle. Lower cannon to mechanical limit stops.

b. Connect tow cables to front of disabled vehicle.

c. Make sure observer is in towing vehicle to watch for signal by towed vehicle driver that engine has started.

d. Shift disabled vehicle into 2nd.

e. Turn vehicle MASTER switch to ON.

f. Depress brake pedal and release parking brake lock.

**CAUTION**

Never depress accelerator pedal on towed vehicle.

g. Tow vehicle in a straight line forward. Do not exceed 10 mph.

h. After engine starts, shift to neutral and signal observer.

i. Adjust hand throttle control lever to run engine at a fast idle (approximately 1000 rpm).

j. Slowly depress brake pedal to prevent overrunning the towing vehicle.

k. After both vehicles have stopped, lock brakes in parking position.

l. Disconnect towing vehicle and place cannon in travel lock.

## 2-8 OPERATING PROCEDURES - CONTINUED

### 2-8.13 Operating Bilge Pump.

**CAUTION**

To check bilge pump, do not operate bilge pump dry longer than 1 minute, or wet for more than 15 minutes without engine running.

To drain water out of engine compartment, turn MASTER switch and BILGE PUMP switch to ON (para 2-1.2.1 and para 2-1.2.2).

### 2-8.14 Operating Hull Doors, Cab Doors, Grilles, and Baskets.

**WARNING**

Make sure all latches are secured when operating with doors opened. Keep hands and arms out of openings when moving to prevent serious injury to personnel.

2-8.14.1 Cab Left Side Door. Push in knob (1) and pull up handle (2) to release. Secure with hold-open latch (3). To close door, pull up knob on latch (3) to release door. Swing door closed, push in knob (1), and pull down on handle (2).

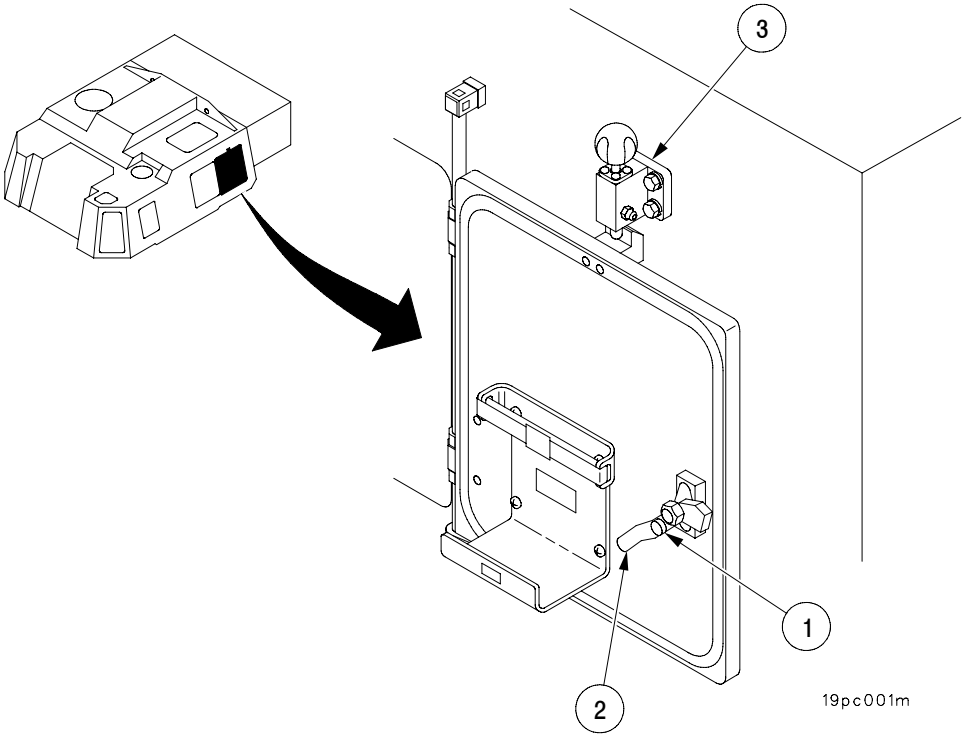

## 2-8 OPERATING PROCEDURES - CONTINUED

### 2-8.14 Operating Hull Doors, Cab Doors, Grilles, and Baskets - Continued

2-8.14.2 Gunner's Escape Hatch. Push knob (1). Turn handle (2) to open hatch. Secure with hold-open latch (3) on side of MCS. To close door, pull down knob on latch (3) to release door. Swing door shut, push in knob (1), and turn handle (2).

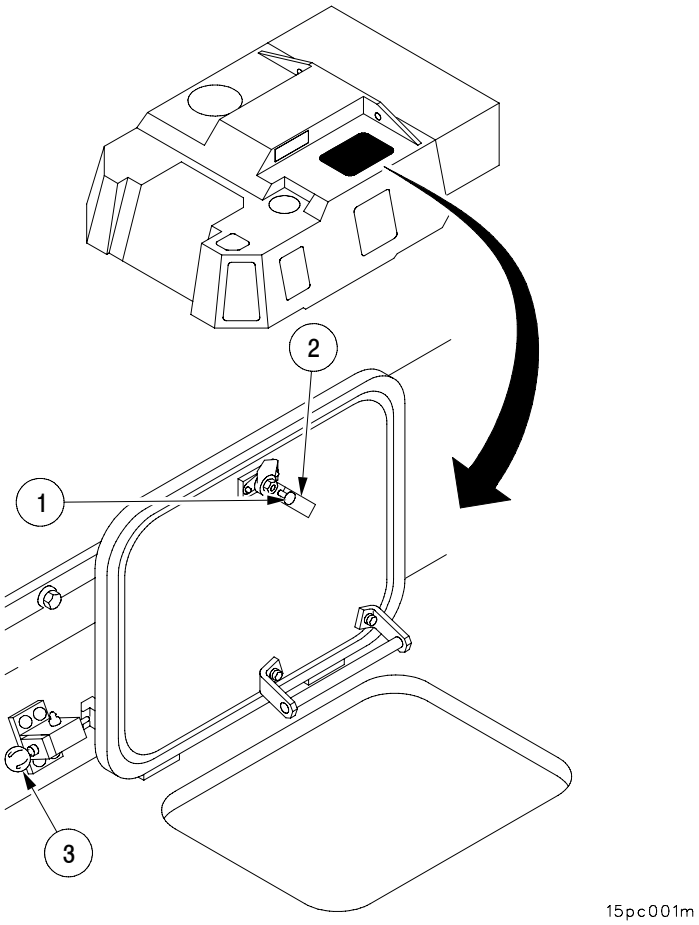

## 2-8 OPERATING PROCEDURES - CONTINUED

### 2-8.14 Operating Hull Doors, Cab Doors, Grilles, and Baskets - Continued

2-8.14.3 Baskets. Remove quick-release pin (1) from bracket (2) and swing basket (3) rearward. Remove quick-release pin (4) from basket (3). Push basket (3) until catch (5) is seated in retainer (6). Install pin (4) in retainer (6). To rotate basket to front, remove quick-release pin (4) from retainer (6) and swing basket (3) forward, until catch (7) is seated in bracket (2). Install quick-release pin (1) in bracket (2).

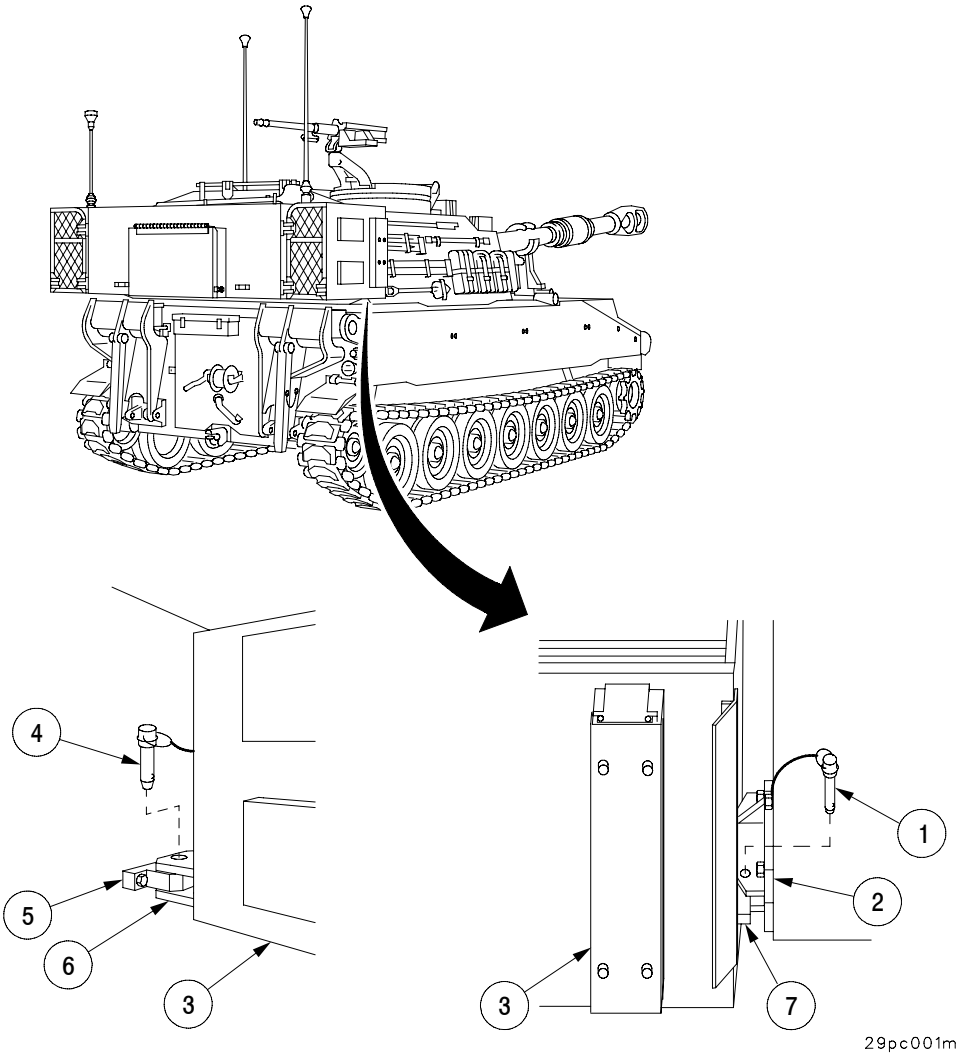

## 2-8 OPERATING PROCEDURES - CONTINUED

### 2-8.14 Operating Hull Doors, Cab Doors, Grilles, and Baskets - Continued

2-8.14.4 Crew Compartment Access Door. Pull up handle (1). Crew compartment access door is secured with a hold-open latch (2) and a hold-open strut (3). Secure strut (3) with pin (4). If hold-open latch fails to secure crew compartment access door, notify Unit Maintenance.

**NOTE**

When moving vehicle or firing howitzer with crew compartment access door open, place hold-open strut in tow lug and insert pin to hold in place.

To close, remove pin (4) from strut (3). Release hold-open latch (2). Swing door closed and pull down handle (1). Place strut (3) in stowed position on door.

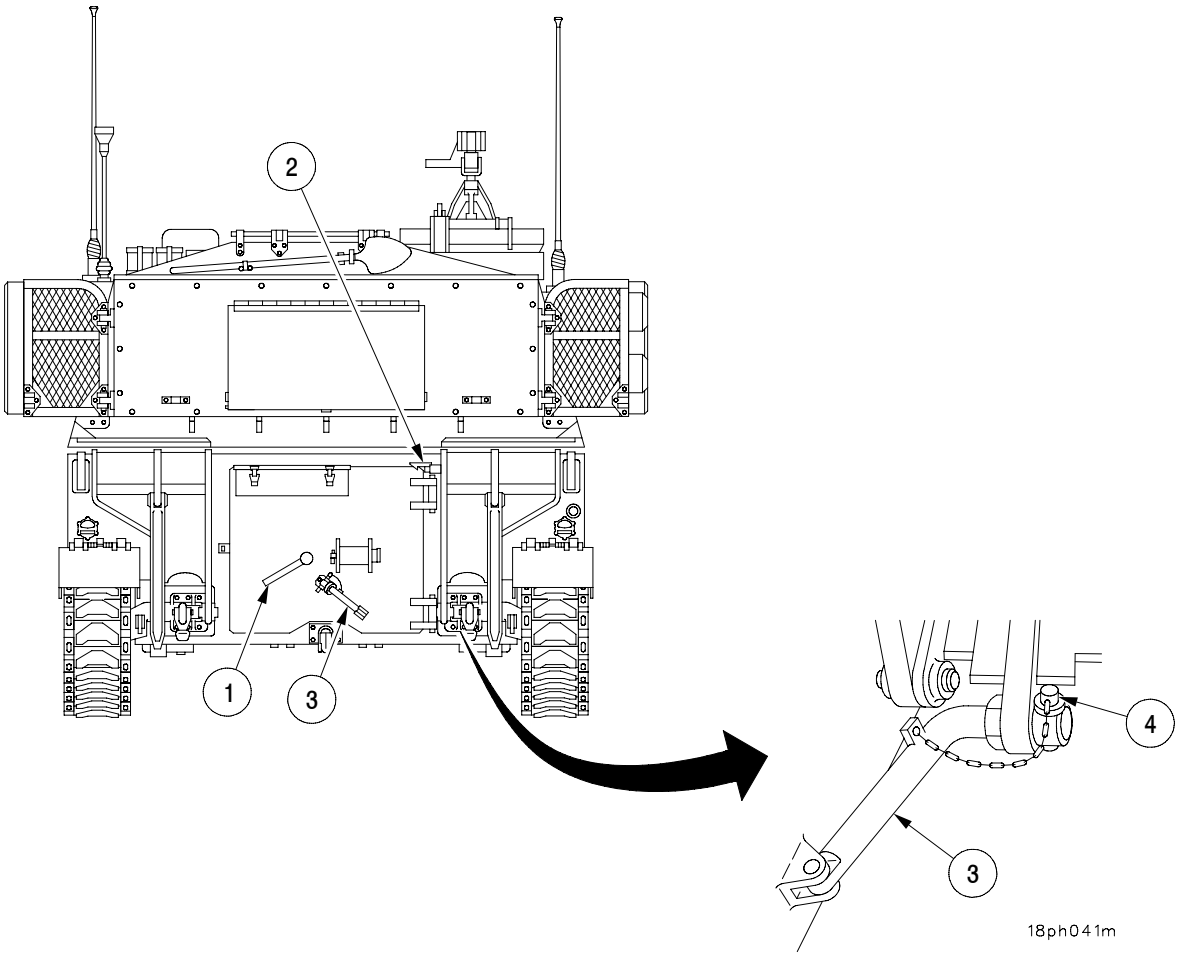


2-8.14.5 Driver's Hatch. Refer to para 2-8.1 for operating driver's hatch.

## 2-8 OPERATING PROCEDURES - CONTINUED

### 2-8.14 Operating Hull Doors, Cab Doors, Grilles, and Baskets - Continued

2-8.14.6 MCS Ballistic Enclosure. Unscrew two T-handles (1). Lift rear door (2) open. Use D-handles (3) to lift forward door (4) open. To close, swing forward door (4) closed. Swing rear door (2) closed and secure with two T-handles (1).

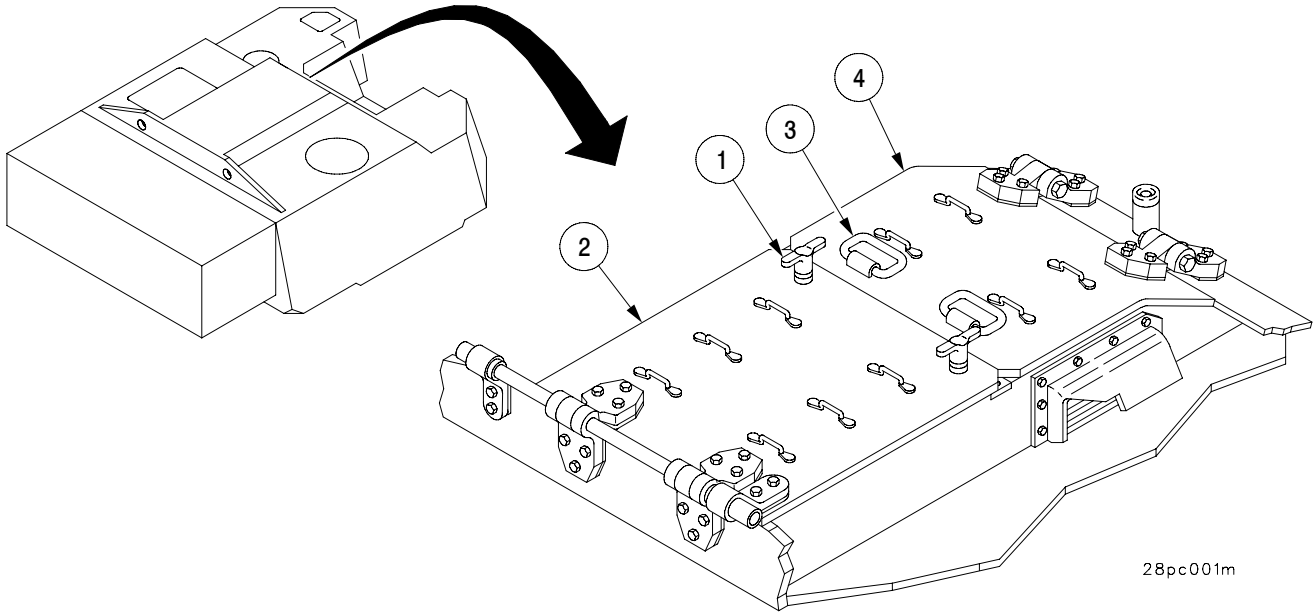


2-8.14.7 Hydraulic Compartment Access Door. Pull up handle (1). Open hydraulic compartment access door (2). To close, swing access door (2) closed and pull down handle (1).

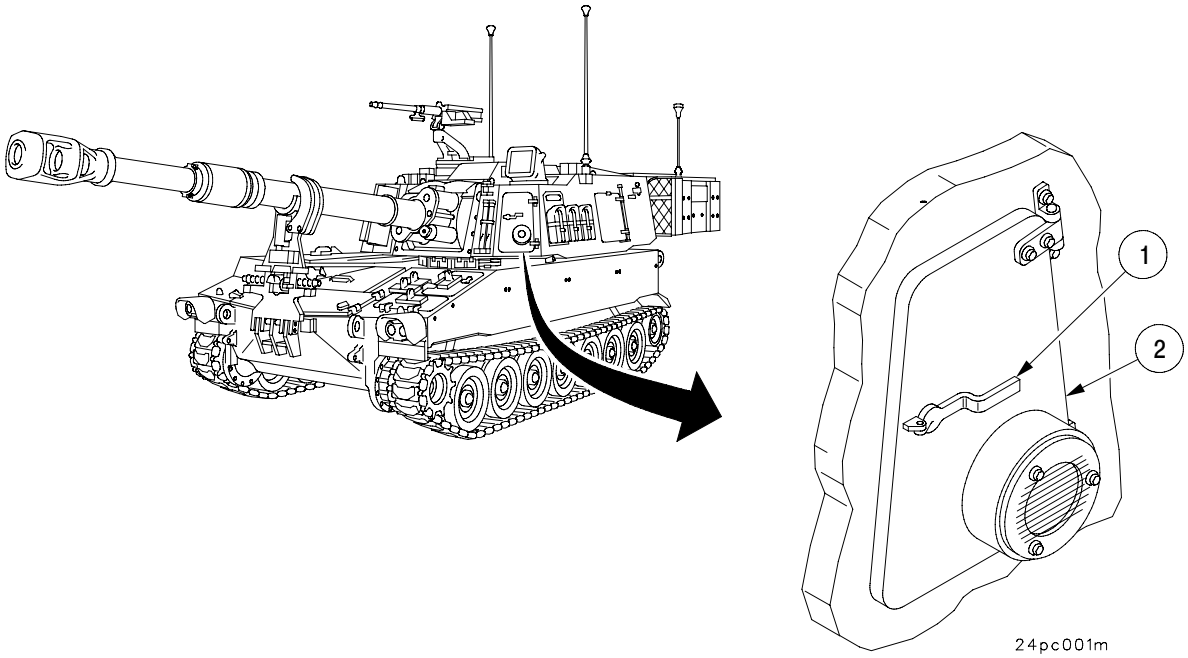

## 2-8 OPERATING PROCEDURES - CONTINUED

### 2-8.14 Operating Hull Doors, Cab Doors, Grilles, and Baskets - Continued

2-8.14.8 Battery Compartment Access Door. Unscrew T-handle (1). Open battery compartment access door (2). To close, swing access door (2) closed and secure with T-handle (1).

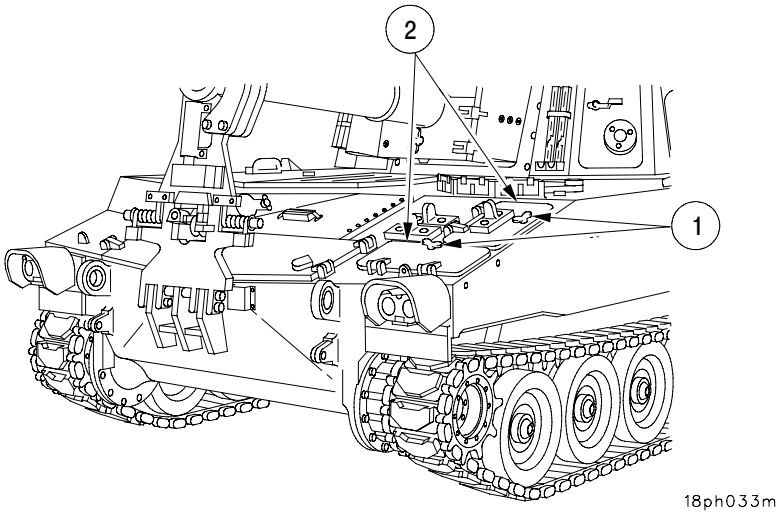


2-8.14.9 Transmission Access Door. Travel lock must be in the maintenance position (para 2-8.19.3). Unscrew T-handle (1). Open transmission access door (2). Use D-handle (3) to open door (4). To close, swing door (4) closed, swing door (2) closed and secure with T-handle (1).

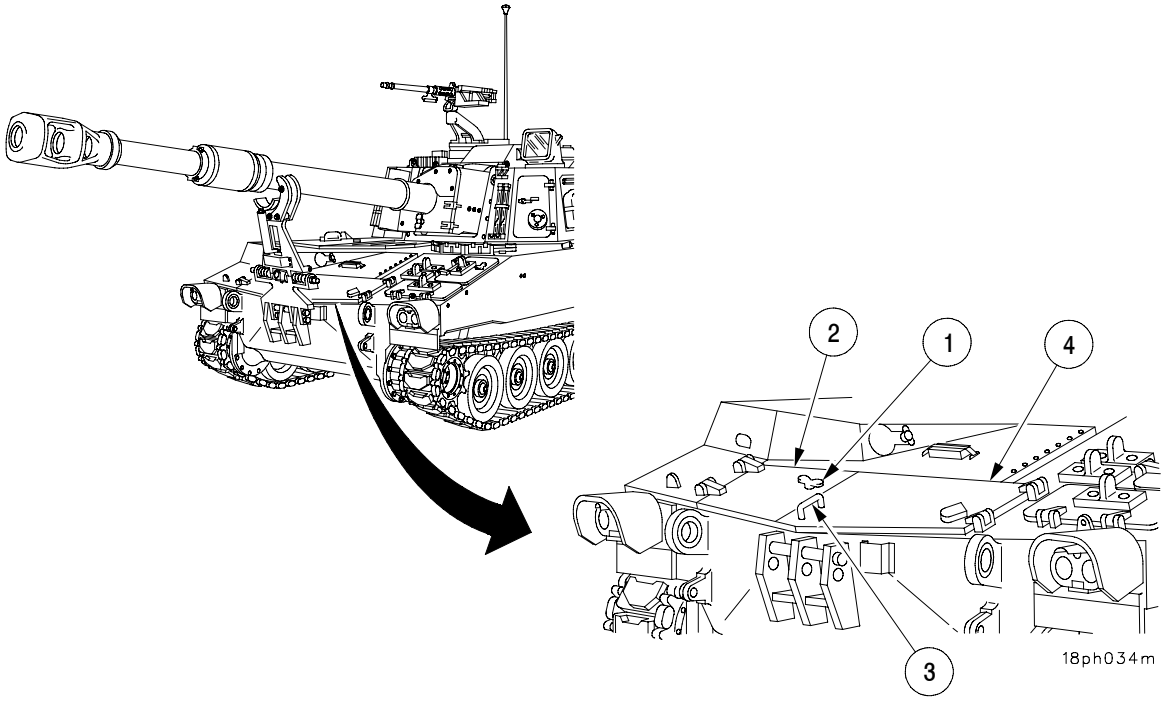

## 2-8 OPERATING PROCEDURES - CONTINUED

### 2-8.14 Operating Hull Doors, Cab Doors, Grilles, and Baskets - Continued

2-8.14.10 Engine Air Intake Grille. Place travel lock in maintenance position (para 2-8.19.3). Traverse cab 90° (para 2-8.21). Unscrew two T-handles (1). Open engine air intake grille (2) and secure in the open position by removing quick-release pin (3) from bracket (4) and installing in support (5). To close, remove quick-release pin (3) from support (5) and install in bracket (4). Lower air intake grille (2) to closed position and secure with two T-handles (1). Stow gun tube in travel position (para 2-8.20).

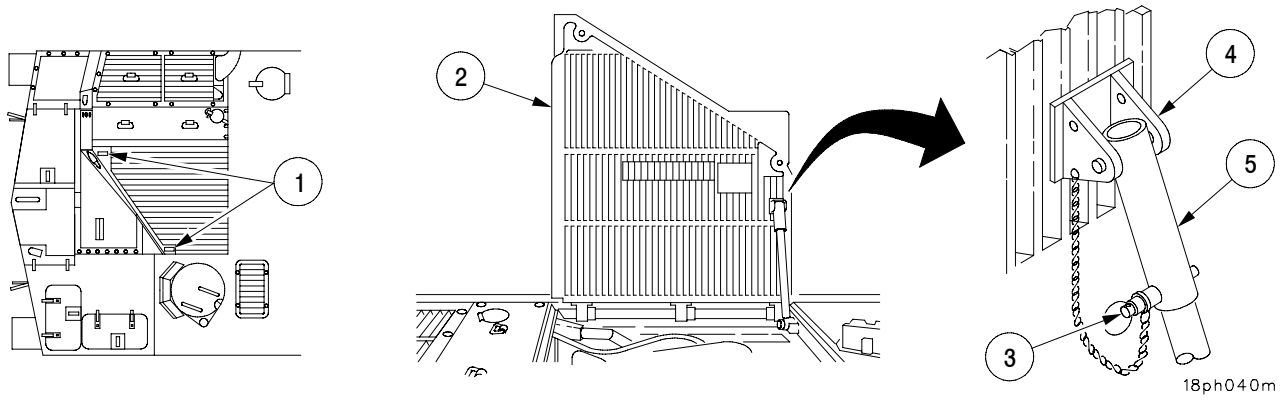


### 2-8.15 Operating Engine Air Cleaner System.

a. Winter position (Below 25°F). Raise locking handles (1) and fasten on hooks (3).

b. Summer position (Over 40°F). Leave locking handles (1) in holders (2).

c. Intermediate temperatures (25°F to 40°F). Start engine with locking handles (1) in winter position. When engine reaches operating temperature, place handles (1) in summer position.

d. Air cleaner restriction indicator (4). An air cleaner indicator gage is located alongside the left air cleaner housing. It reads green when air cleaner is operating properly. When air flow is restricted, a red sleeve covers the green indicator indicating that the air cleaner element should be serviced (para 3-7.13). A reset button on the air cleaner restriction indicator will retract the red sleeve and the green signal will show again. If the restriction has not been removed, the red signal will return when the engine is operated.

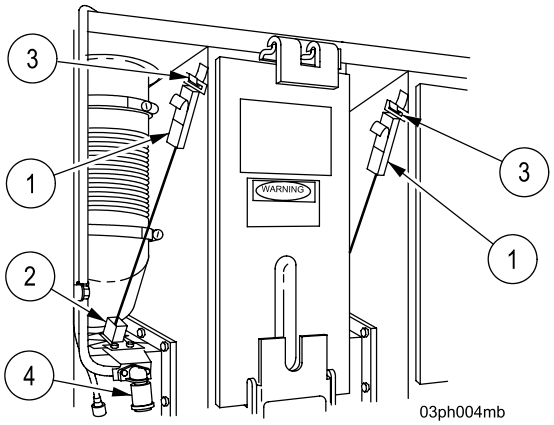

## 2-8 OPERATING PROCEDURES - CONTINUED

### 2-8.16 Operating COS Seat and Footrest.

**WARNING**

Seat is heavy and under spring tension. Support seat when changing position to prevent seat from springing upward or downward to avoid injury.

2-8.16.1 Stowing COS Seat and Footrest.

**CAUTION**

Make sure that COS seat is locked in forward position before stowing seat.

a. Fold backrest (1) down.

b. Push down and support seat. Pull pin (2) and raise seat.

c. Pull footrest (3) up and adjust to vertical position.

d. Lift up on footrest brace (4) to release swivel detent (5), swing footrest forward, and engage swivel detent (5).

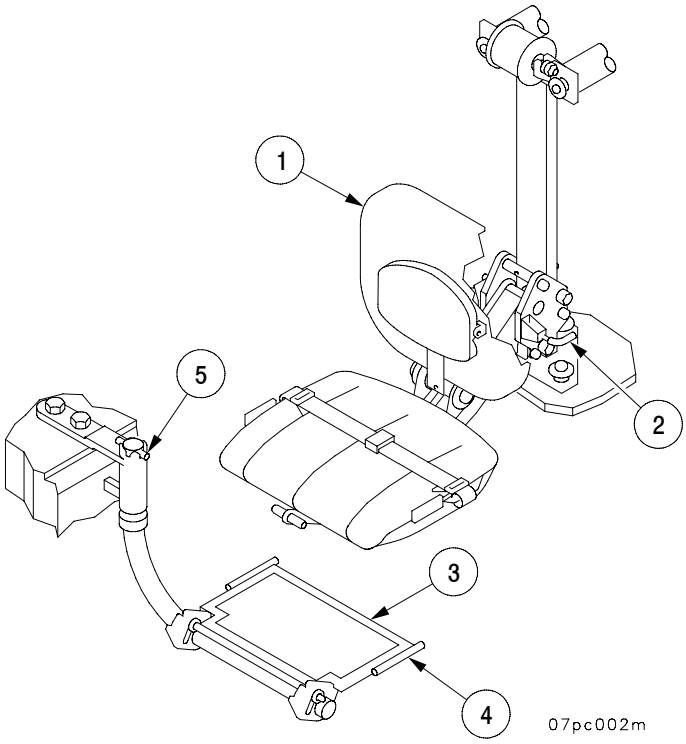

# 2-8 OPERATING PROCEDURES - CONTINUED

## 2-8.16 Operating COS Seat and Footrest - Continued

2-8.16.2 Unstowing COS Seat and Footrest.

a. Push up and support seat. Pull pin (2) out and lower seat.

b. Unfold backrest (1).

c. Lift up on footrest brace (4) to release swivel detent (5). Swing footrest back, and engage swivel detent (5).

d. Pull footrest (3) up and adjust to horizontal position.

e. Pull seat operating lever (6) toward seat to adjust seat height.

2-8.16.3 Rotating COS Seat.

a. Pull up on handle (7) to release seat.

b. Rotate seat to forward position until release latch locks.

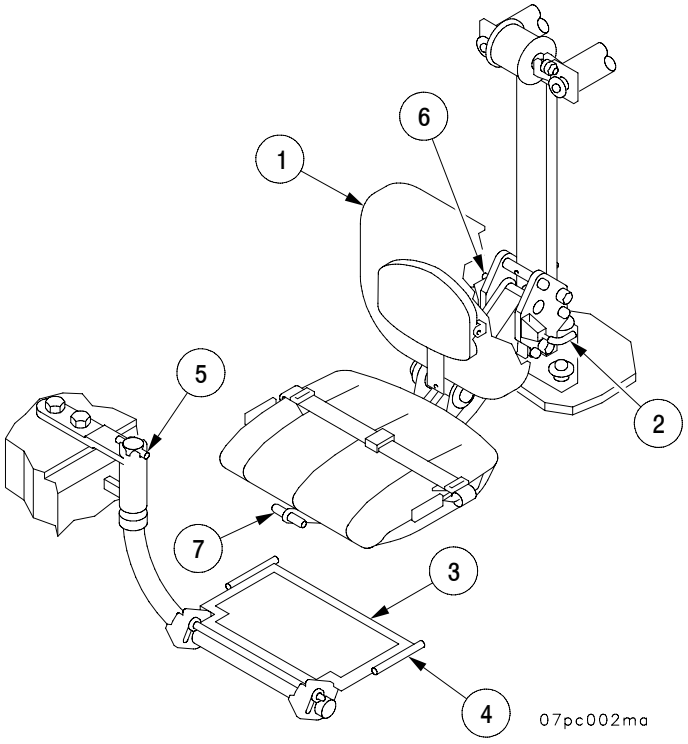

## 2-8 OPERATING PROCEDURES - CONTINUED

### 2-8.17 Operating Crew Seats.

2-8.17.1 Lowering Crew Seats.

a. Pivot backrest (1) up.
b. Remove bungee cord (2) from tabs (3) marked “B”.
c. Pivot folded seat bottom (4) down.
d. Unfold seat bottom (4).
e. Pull footrest (5) out from retainer (6) marked “A”.
f. Unbuckle seatbelt (7).

2-8.17.2 Stowing Crew Seats.

a Fold seat bottom (4) in half (front half on top of rear half).
b. Push folded seat bottom (4) up to vertical position.
c. Place footrest (5) behind retainers (6) marked “A”.
d. Buckle seatbelt (7).
e. Drape seatbelt (7) over bungee cord (2).
f. Engage bungee cord (2) behind tabs (3) marked “B”.
g. Lift and rotate backrest (1) down.

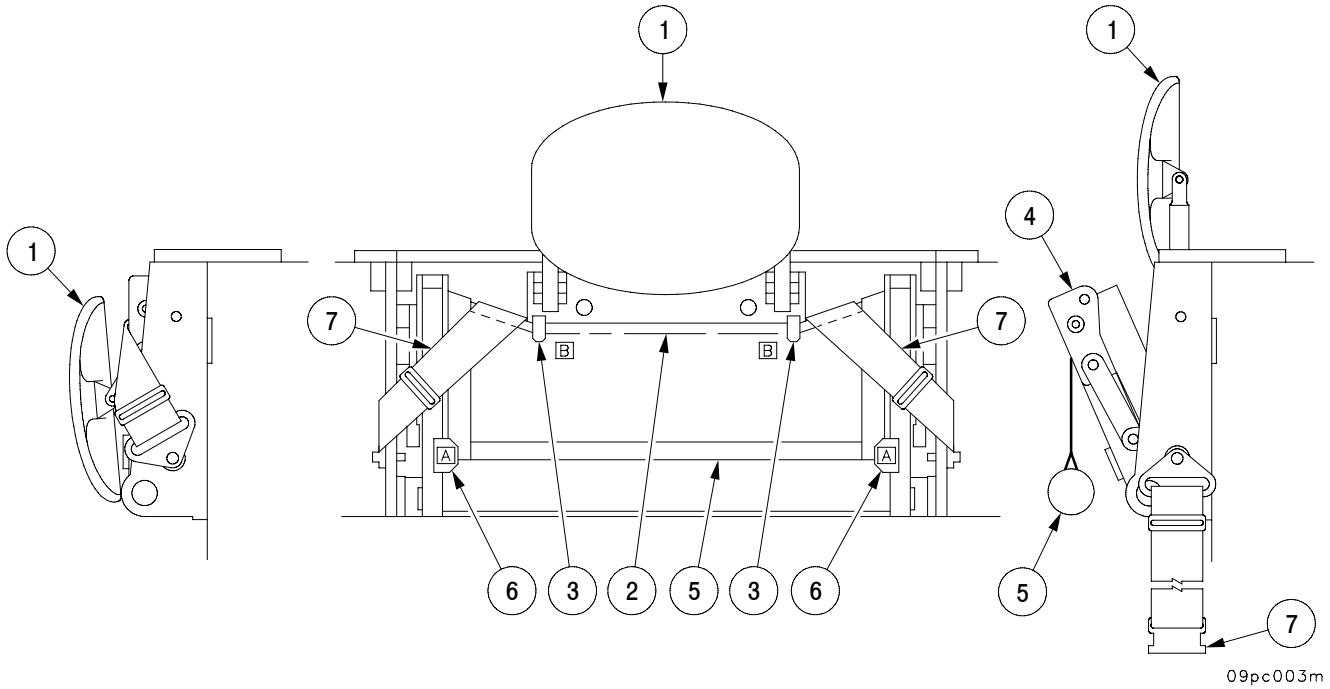

## 2-8 OPERATING PROCEDURES - CONTINUED

### 2-8.18 Operating Commander's Cupola.

a. To open cupola, pull down on latch (1) and turn handle (2) to left. Swing cover open and secure with hold-down latch (3). Reverse procedure to close.

b. To rotate cupola, pull out latch (4). Rotate cupola and secure by releasing latch (4) into one of the notches (5).

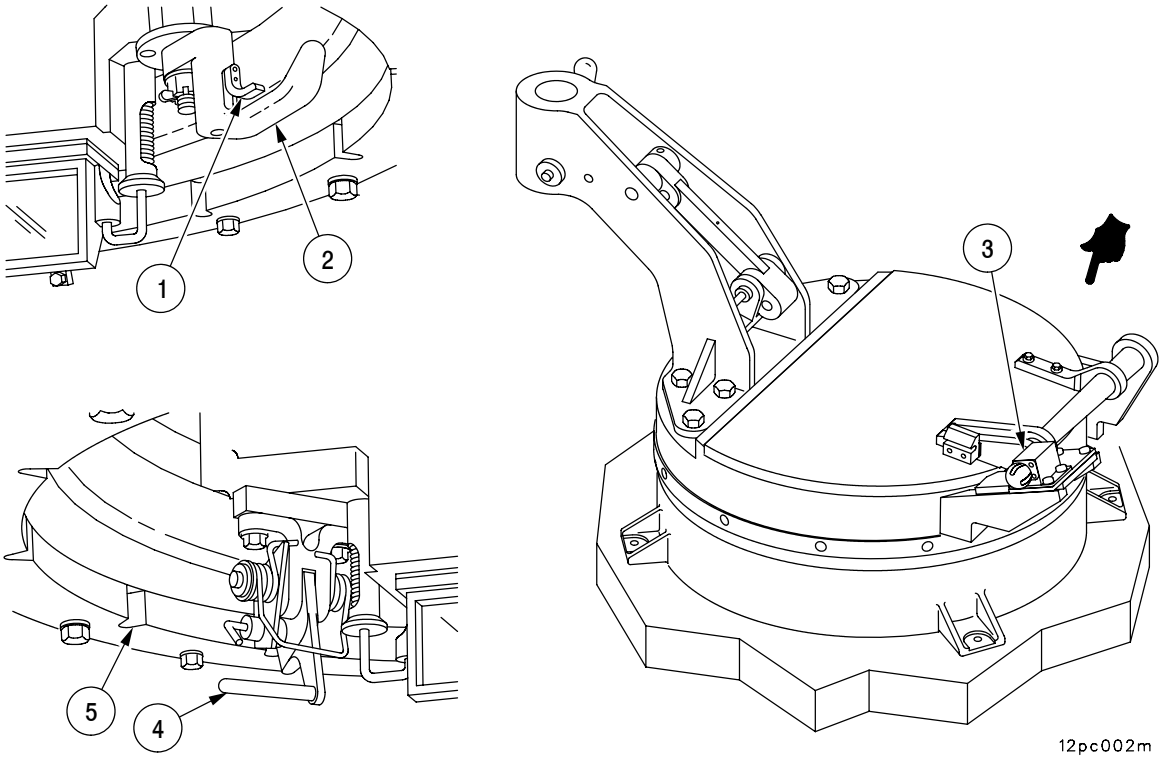

## 2-8 OPERATING PROCEDURES - CONTINUED

### 2-8.19 Releasing Gun Tube.

2-8.19.1 Releasing Gun Tube.

**CAUTION**

During icing conditions, ensure that travel lock is not frozen in position before attempting to move it.

a. Turn vehicle MASTER switch to ON.
b. Turn POWER switch (1) on travel lock control box to ON.
c. Set and hold travel lock control switch (2) to RAISE/UNLOCK position until R/U light (3) illuminates.
d. Elevate gun tube to clear travel lock (4) (para 2-8.21.4).
e. Set and hold travel lock control switch (2) to LOWER/LOCK position until L/L light (5) illuminates.
f. Turn POWER switch (1) to OFF.

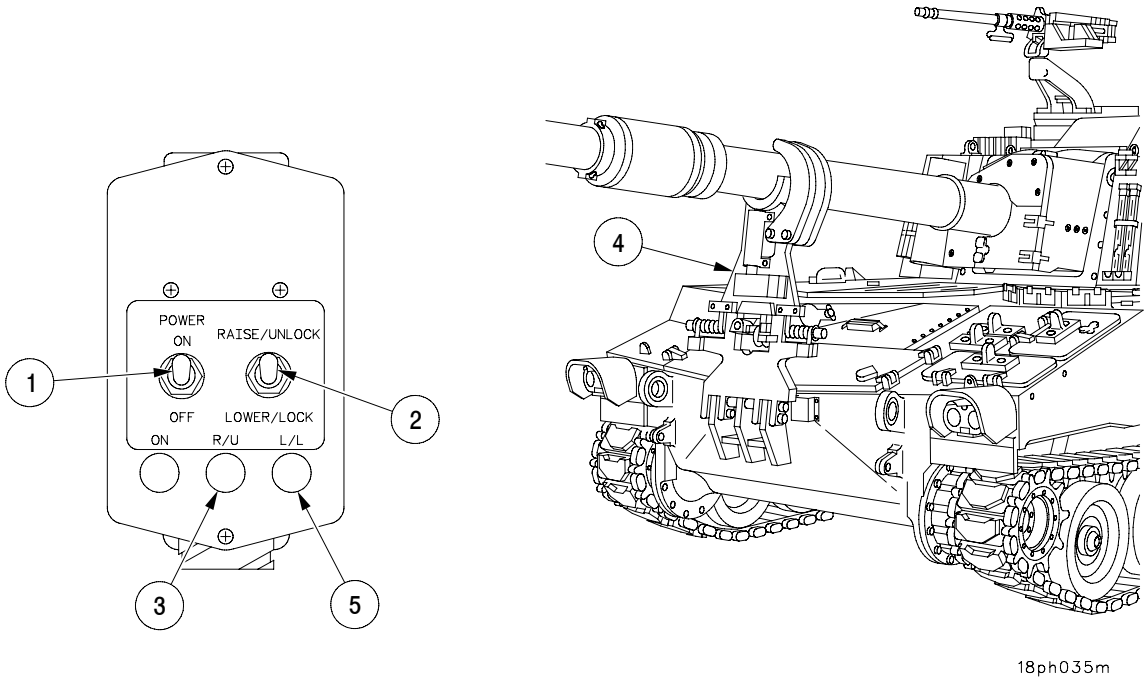

## 2-8 OPERATING PROCEDURES - CONTINUED

### 2-8.19 Releasing Gun Tube - Continued

2-8.19.2 Releasing Gun Tube (Manual).

**WARNING**

Do not let go of crowbar until travel lock is on deck.

a. Remove retaining clip (1) from actuator release pin (2).
b. Remove upper actuator release pin (2) to disengage actuator (3).
c. Insert crowbar into lever (4).
d. Pull down on crowbar until jaw (5) is unlocked and fully retracted.
e. Elevate gun tube to clear travel lock (6) (para 2-8.21.4).

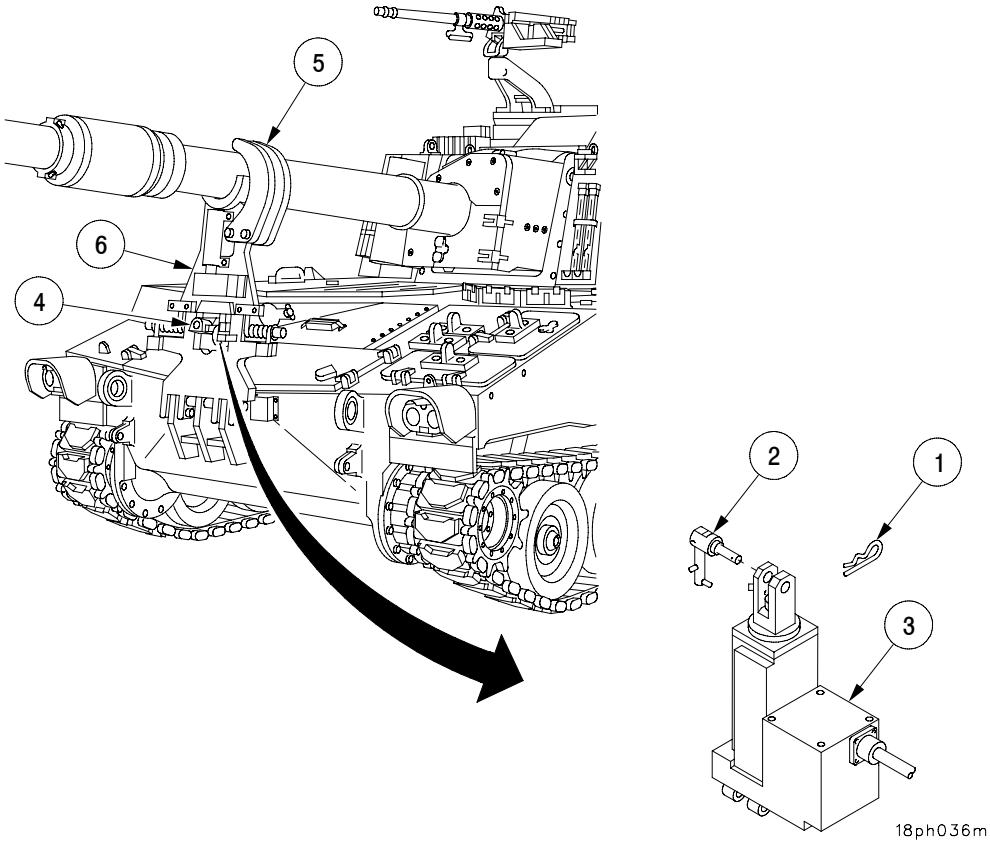

# 2-8 OPERATING PROCEDURES - CONTINUED

## 2-8.19 Releasing Gun Tube - Continued

2-8.19.2 Releasing Gun Tube (Manual) - Continued

f. Slowly lower travel lock (6) to engine deck using crowbar.

g. Remove quick-release pin (7) from stowed bracket (8) and install in bracket (9) to secure travel lock to deck.

h. Remove crowbar from lever (4).

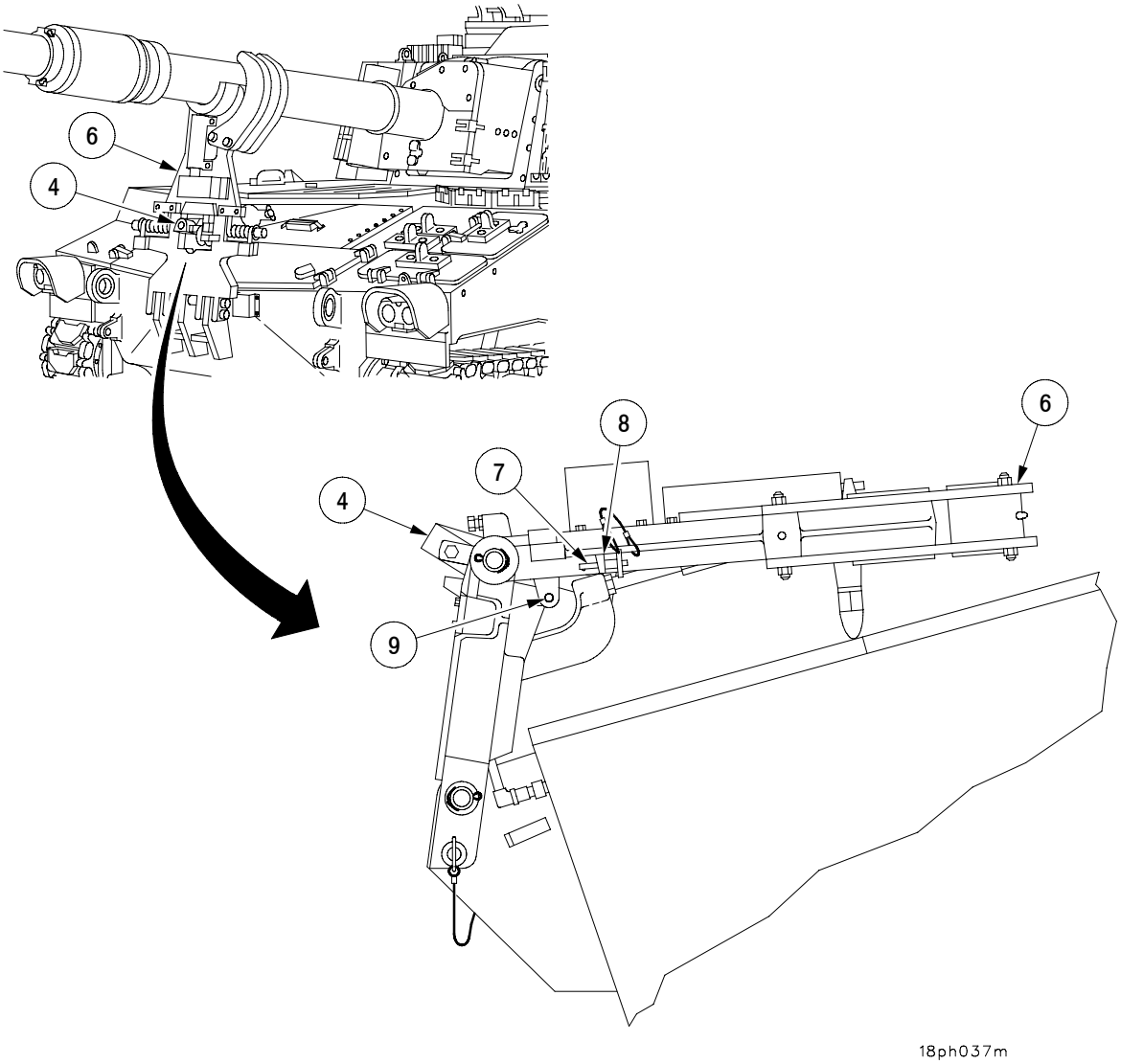

## 2-8 OPERATING PROCEDURES - CONTINUED

### 2-8.19 Releasing Gun Tube - Continued

2-8.19.3 Gun Tube Travel Lock Maintenance Position.

a. Release gun tube (para 2-8.19.1).

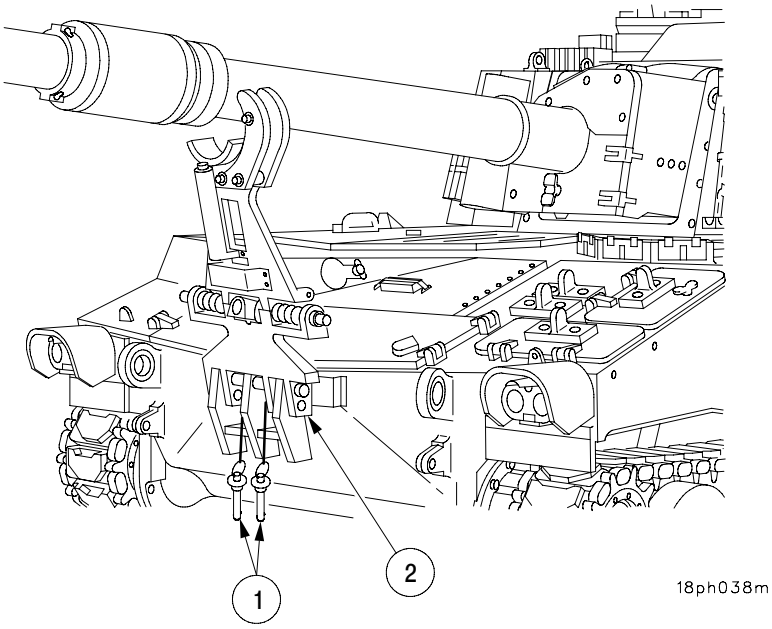


**CAUTION**

To prevent damage to hull, do not allow travel lock to slam against hull after quick-release pins are removed.

b. Remove two quick-release pins (1) from hull mounting bracket (2).

c. Move travel lock forward to rest against hull to achieve maintenance position.

d. After maintenance is completed, move travel lock inward to align mounting holes and install two quick-release pins (1) in hull mounting bracket (2).

e. Stow gun tube in travel position (para 2-8.20).

## 2-8 OPERATING PROCEDURES - CONTINUED

### 2-8.20 Stowing Gun Tube.

2-8.20.1 Stowing Gun Tube (AFCS/PDFCS).

**WARNING**

All personnel located outside the vehicle must be clear of hull and driver's hatch must be closed while cab is being traversed.

**CAUTION**

During icing conditions, ensure that travel lock is not frozen in position before attempting to move it.

a. Turn vehicle MASTER switch to ON.

b. Start engine, set hand throttle at 1000 - 1200 rpm.

c. Turn HYDRAULIC POWER switch to ON and TRAVERSE MODE switch to POWER position.

**NOTE**

AFCS/PDFCS must be initialized and NAV system aligned while gun tube is in travel lock.

d. Ensure that AFCS/PDFCS is ON, initialized, and in NORMAL operation mode (para 2-12.1 if AFCS is installed or para 2-15B.1 if PDFCS is installed).

e. Rotate traverse lock to UNLOCKED position (para 2-8.21.1).

f. On AFCS DU/PDFCS keypad (1), set GUN switch (2) to ON.

g. Ensure gun tube is raised to clear travel lock.

h. Press and hold STOW key (3), GUN SERVO indicator (4) will light and gun tube will automatically move to the stow position above the travel lock. When this position has been reached, the display will highlight the STOW segment.

i. Turn POWER switch (5) on travel lock control box to ON.

j. Set and hold travel lock control switch (6) to RAISE/UNLOCK position until R/U light (7) illuminates.

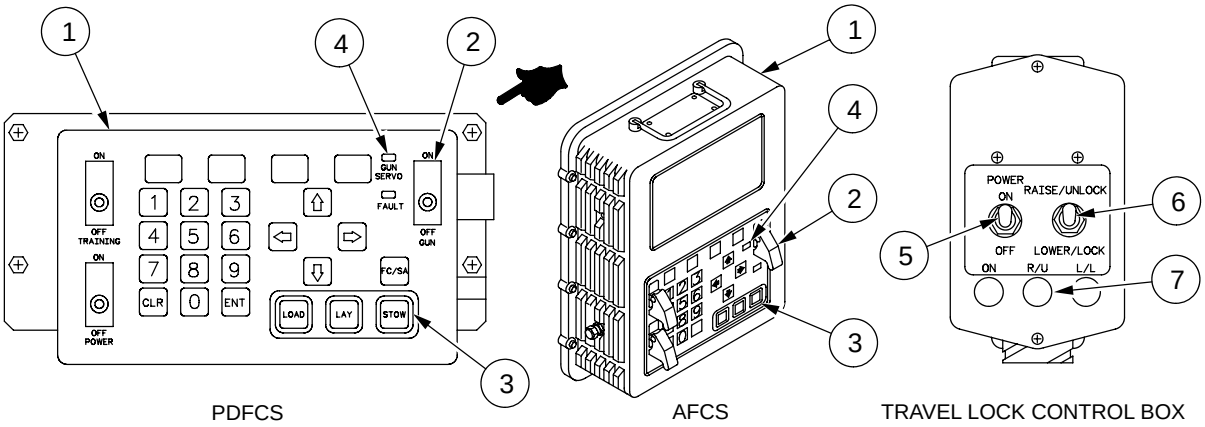


06pc622m

## 2-8 OPERATING PROCEDURES - CONTINUED

### 2-8.20 Stowing Gun Tube - Continued

2-8.20.1 Stowing Gun Tube (AFCS/PDFCS) - Continued

k. On AFCS DU/PDFCS keypad (1), set GUN switch (2) to OFF.

l. Lower gun tube into the travel lock.

m. Lock cab traverse lock.

n. Move travel lock control switch (6) to the LOWER/LOCK position. L/L indicator (8) will illuminate when travel lock is locked.

o. Turn POWER switch (5) on travel lock control box to OFF.

p. Turn hydraulic control box POWER switch to OFF.

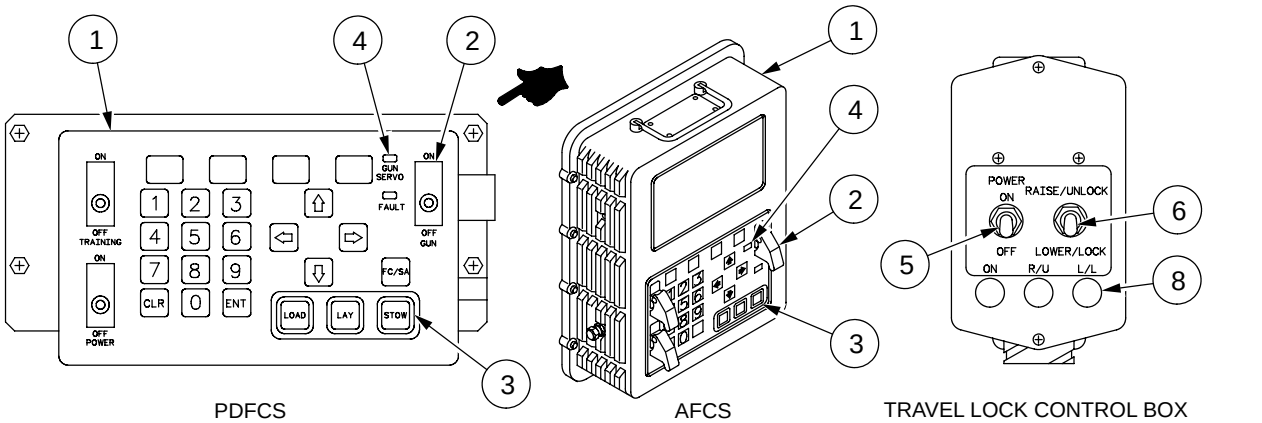


06pc622ma

2-8.20.2 Stowing Gun Tube (Power).

**WARNING**

All personnel located outside the vehicle must be clear of hull and driver's hatch must be closed while cab is being traversed.

**CAUTION**

During icing conditions, ensure that travel lock is not frozen in position before attempting to move it.

a. Elevate gun tube to ensure clearance for raised travel lock (para 2-8.21.4).

b. Traverse cab until cab is in stow position (para 2-8.21.2).

c. Turn POWER switch (1) on travel lock control box to ON.

# 2-8 OPERATING PROCEDURES - CONTINUED

## 2-8.20 Stowing Gun Tube - Continued

2-8.20.2 Stowing Gun Tube (Power) - Continued

d. Set and hold travel lock control switch (2) to RAISE/UNLOCK position until R/U light (3) illuminates.

e. Lower tube into travel lock.

f. Lock cab traverse lock.

g. Set and hold travel lock control switch (2) to LOWER/LOCK position until L/L light (4) illuminates.

h. Turn POWER switch (1) on travel lock control to OFF.

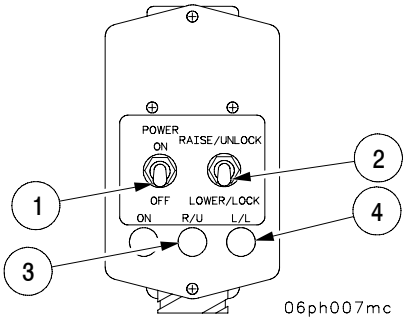


2-8.20.3 Stowing Gun Tube (Manual).

a. Elevate gun tube to ensure clearance for raised travel lock (para 2-8.21.4).

b. Traverse cab in position for stowing tube (para 2-8.21.2).

c. Remove quick-release pin (1) from bracket (2) and install in stowage bracket (3). Using crowbar in lever (4), raise travel lock (5) to fully extended position.

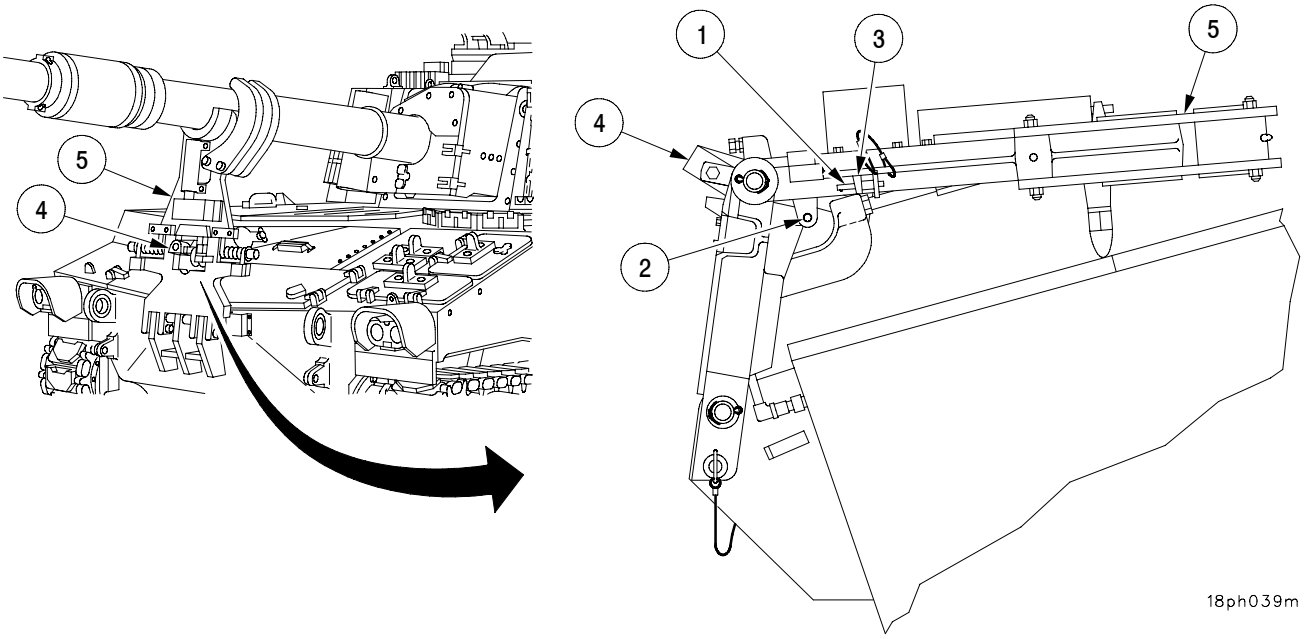

# 2-8 OPERATING PROCEDURES - CONTINUED

## 2-8.20 Stowing Gun Tube - Continued

2-8.20.3 Stowing Gun Tube (Manual) - Continued

d. Lower gun tube and lock cab traverse lock.

**WARNING**

Do not let go of crowbar until lever is up and jaw is locked around gun tube. Lever can throw crowbar if not fully rotated.

e. Using crowbar, carefully rotate lever (4) up until jaw (6) locks around gun tube.

f. Install actuator release pin (7) into actuator (8).

g. Remove crowbar from lever (4).

h. Install retaining clip (9) in actuator release pin (7).

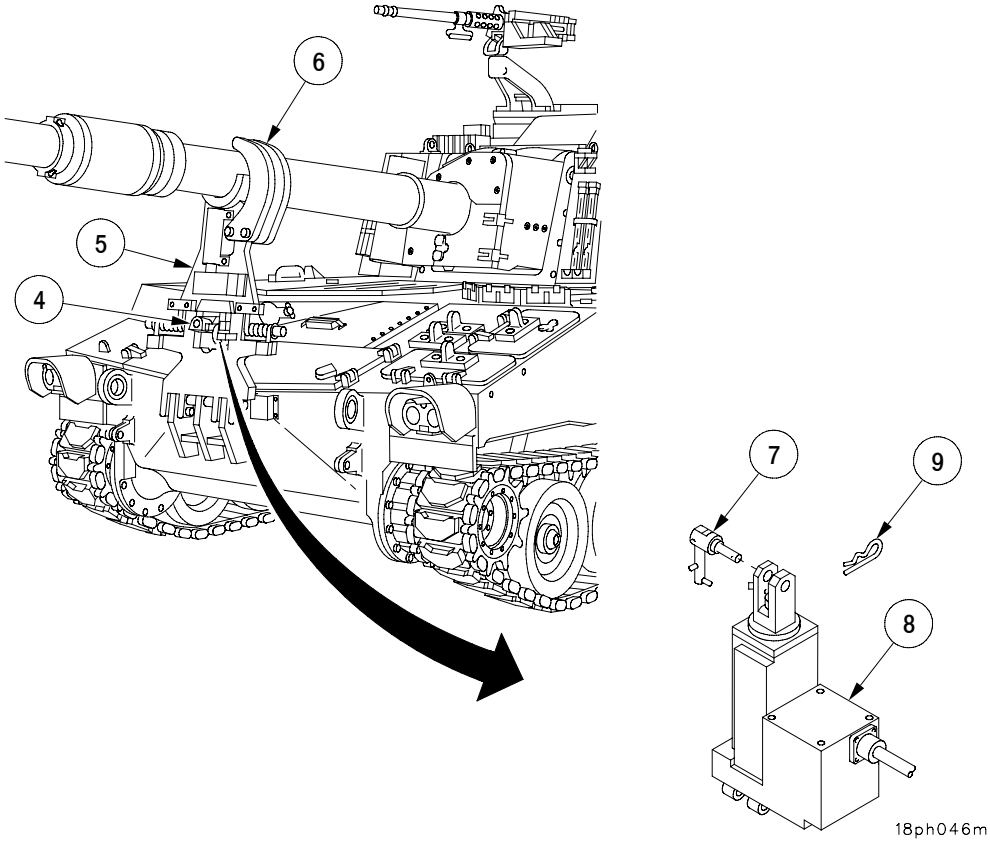

## 2-8 OPERATING PROCEDURES - CONTINUED

### 2-8.21 Traversing and Elevating.

2-8.21.1 Releasing Cab Traverse Lock.

a. Squeeze handle (1) and lever (2) together.

b. Rotate cab traverse lock to position UNLOCKED.

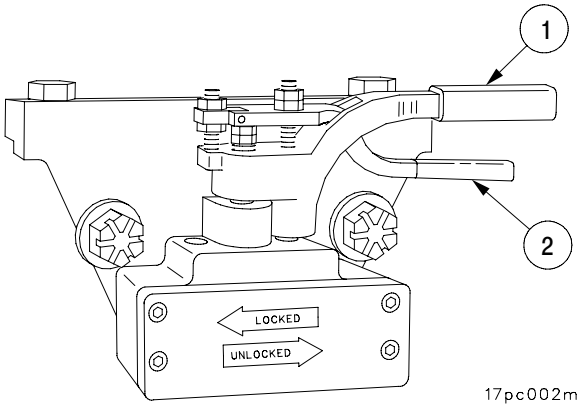


2-8.21.2 Power Traversing.

**WARNING**

All personnel located outside the vehicle must be clear of hull and driver's hatch must be closed while cab is being traversed.

**CAUTION**

- Don't use power traverse if your vehicle is positioned with more than 10 degrees or 178 mils cant to prevent damage to equipment.
- Do NOT traverse more than 800 mils from the stow (travel lock) position until step i is performed to prevent damage to equipment.
- Use caution when traversing above 1100 mils. The projectile rammer may interfere with projectiles and projectile stowage racks located along the sponsons, causing damage to equipment.

a. Turn vehicle MASTER switch to ON.

b. Start engine, set hand throttle at 1000 - 1200 rpm.

## 2-8 OPERATING PROCEDURES - CONTINUED

### 2-8.21 Traversing and Elevating - Continued

2-8.21.2 Power Traversing - Continued

**CAUTION**

If hydraulic pressure exceeds 2000 psi, turn hydraulic control box POWER switch to OFF position to prevent internal damage to hydraulic system components.

c. Turn HYDRAULIC POWER switch (1) to ON.

d. Turn TRAVERSE MODE switch (2) to POWER position.

**NOTE**

- If power for hydraulic clutch valve fails, loss of pressure occurs and cab cannot be power traversed normally. Perform step (e) and notify unit maintenance.
- The cab may be traversed at gunner or COS station by placing TRAVERSE CONTROL switch in desired position.

e. To overcome hydraulic clutch valve failure, use manual traversing (para 2-8.21.3).

f. Place TRAVERSE CONTROL switch (3) in desired position.

g. Turn control handle (4) right (to TRAVERSE RIGHT) or left (to TRAVERSE LEFT).

h. To stop rotation, return control handle (4) slowly to center position. Wait until cab stops.

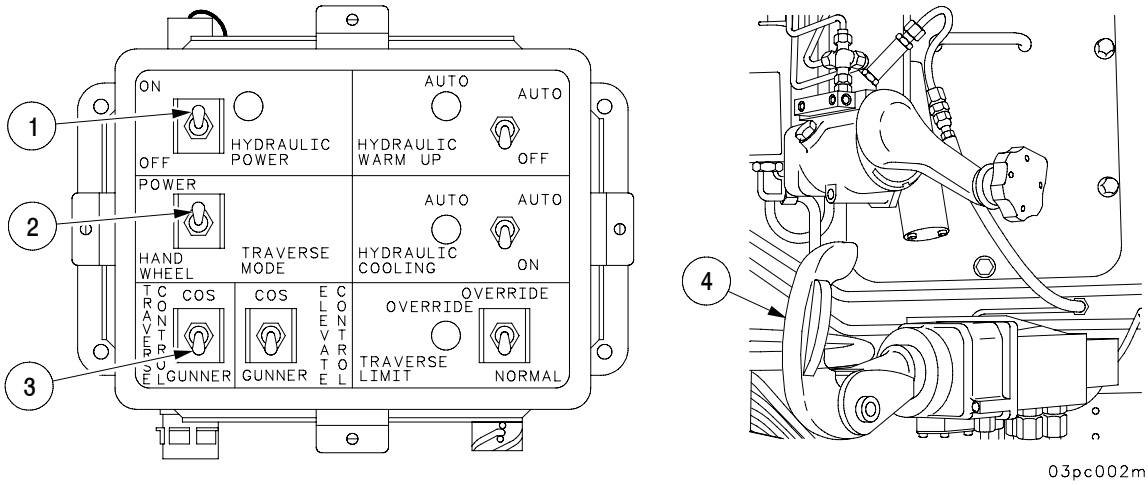

# 2-8 OPERATING PROCEDURES - CONTINUED

## 2-8.21 Traversing and Elevating - Continued

2-8.21.2 Power Traversing - Continued

i. Before overriding 800 mils traverse limit, disconnect driver's MCS hose, install cap on quick-disconnect coupling, and secure hose in hook and loop fastener provided in hull.

j. To override 800 mils traverse limit:

(1) Hold TRAVERSE LIMIT OVERRIDE switch (5) in OVERRIDE position.

(2) If in AFCS/PDFCS mode, "OVERRIDE AZ LIMITS YES NO" message on display will appear. Press "YES" key to override.

2-8.21.3 Manual Traversing. Set TRAVERSE MODE switch (1) to HAND WHEEL position. Turn hand wheel (2). Cab rotates in same direction as hand wheel rotation.

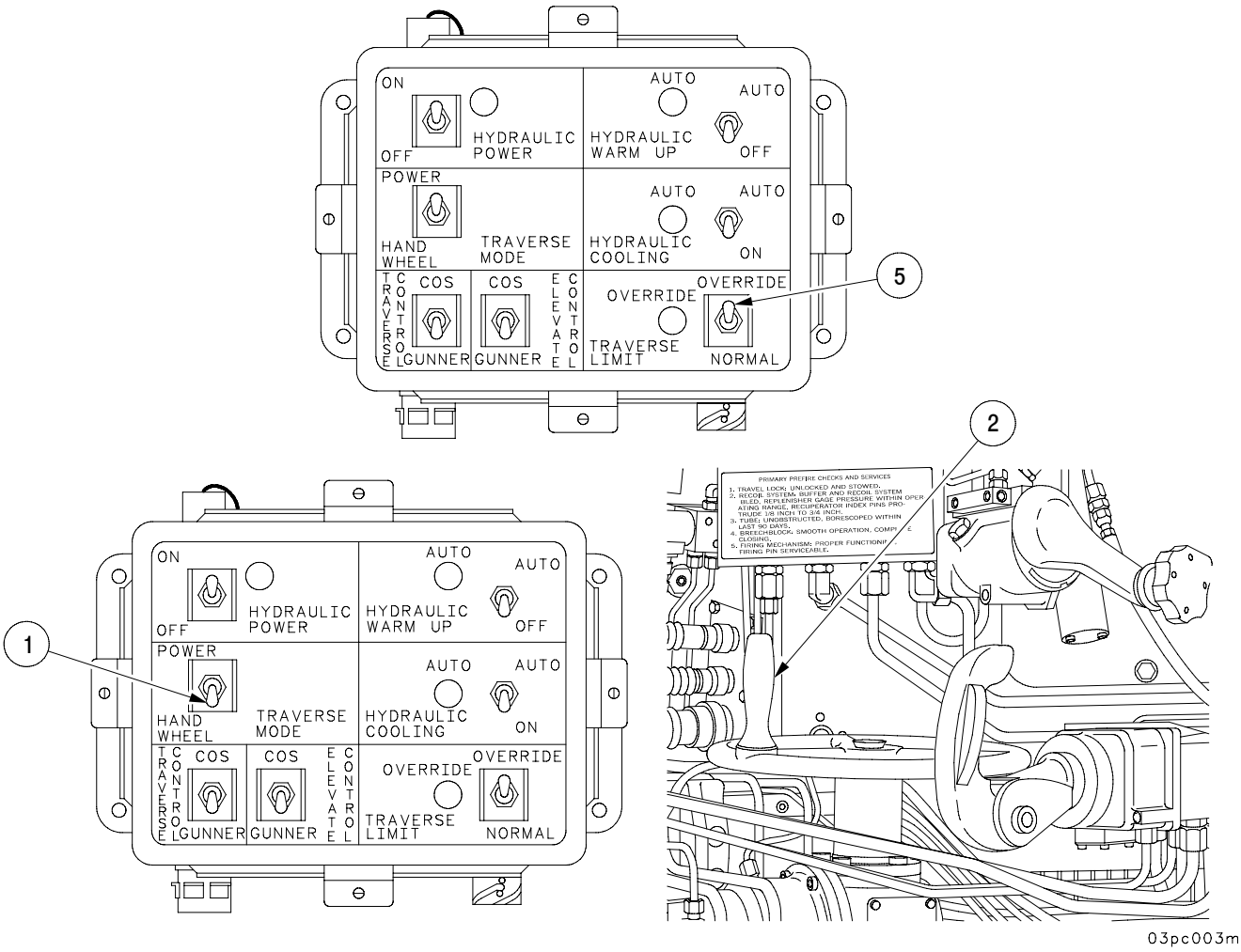

## 2-8 OPERATING PROCEDURES - CONTINUED

### 2-8.21 Traversing and Elevating - Continued

2-8.21.4 Power Elevating.

**WARNING**

All personnel must be clear of the breech area when elevating and depressing gun tube.

**CAUTION**

Ensure MCS doors are closed before elevating. Failure to comply may cause damage to equipment.

**NOTE**

The gun tube may be elevated or depressed at either gunner or COS station by placing the ELEVATE CONTROL switch in the desired position.

a. Turn vehicle MASTER switch to ON.
b. Start engine and idle at 1000 to 1200 rpm.
c. Release gun tube (para 2-8.19.1).
d. Turn TRAVERSE MODE switch (1) to POWER.
e. Turn HYDRAULIC POWER switch (2) to ON.
f. Place ELEVATE CONTROL switch (3) in desired position.
g. Pull handle (4) to elevate gun. Push handle (4) to depress.

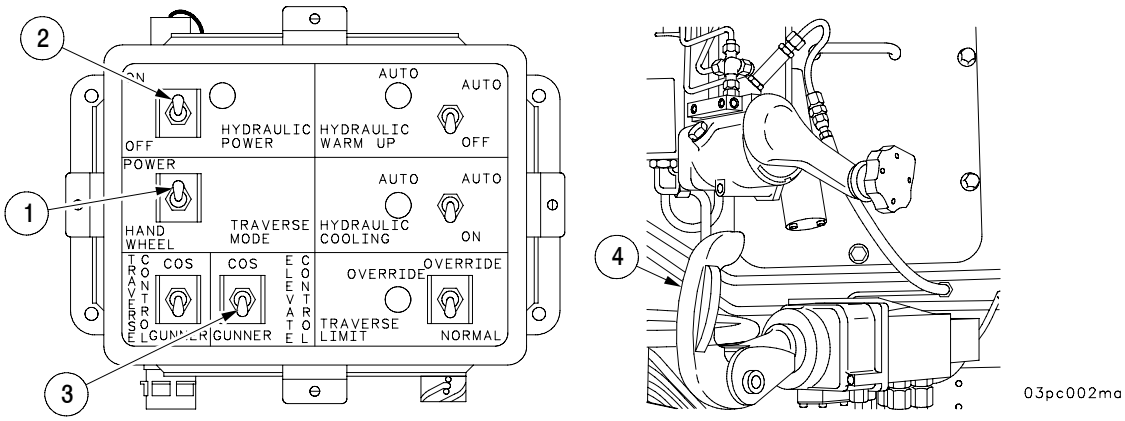


**WARNING**

All personnel must be clear of the breech area when elevating and depressing gun tube.

2-8.21.5 Manual Elevating. Manual elevating is done by operating elevating hand pump (1).

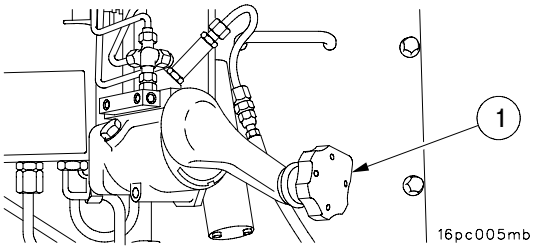

# 2-9 DECALS AND INSTRUCTION PLATES.

## 2-9.1 Hull Decals and Instruction Plates.

PREVENTION OF ENGINE OVERHEATING

DO:

A. DO MAINTAIN PROPER COOLANT AND LUBRICANT LEVELS
B. DO SHIFT TO A LOWER TRANSMISSION GEAR RANGE WHEN ENGINE RPM IS LESS THAN 1725
C. DO RUN ENGINE FOR FIVE MINUTES AT 1000 RPM PRIOR TO SHUTDOWN WHEN COOLANT TEMPERATURE IS ABOVE 180 F

PREVENTION OF ENGINE OVERHEATING

DON'T:

A. DON'T OPERATE ENGINE AT IDLE FOR MORE THAN TEN MINUTES, SET HAND THROTTLE AT FAST IDLE (1000 RPM)
B. DON'T BLOCK ENGINE AIR INTAKE GRILLS WITH CAMOUFLAGE OR OTHER MATERIALS
C. DON'T HOLD VEHICLE ON GRADE USING ACCELERATOR

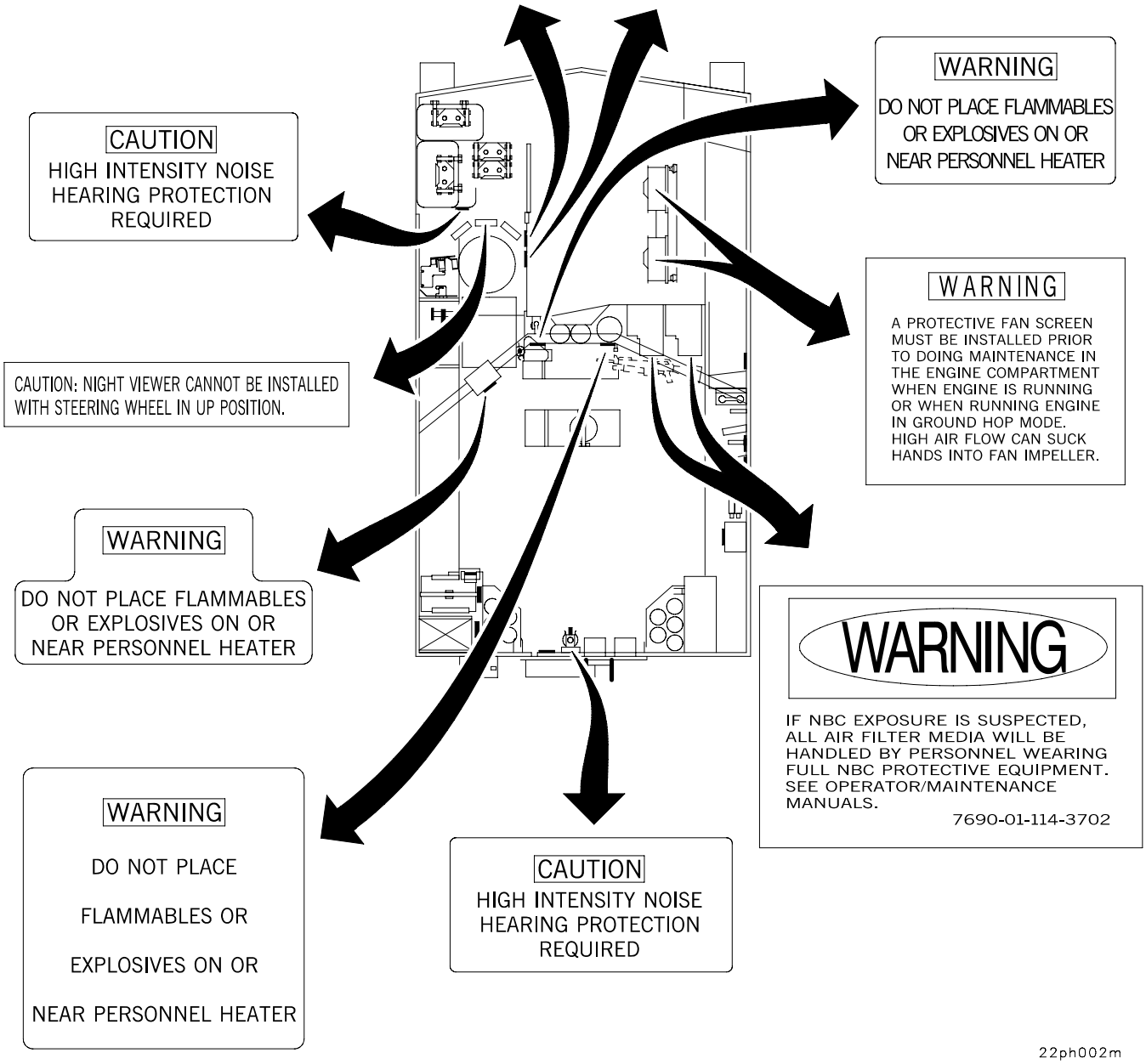

# 2-9 DECALS AND INSTRUCTION PLATES - CONTINUED

## 2-9.2 Cab Decals and Instruction Plates.

PRIMARY PREFIRE CHECKS AND SERVICES

1. TRAVEL LOCK: UNLOCKED AND STOWED.
2. RECOIL SYSTEM: BUFFER AND RECOIL SYSTEM BLED, REPLENISHER GAGE PRESSURE WITHIN OPERATING RANGE, RECUPERATOR INDEX PINS PROTRUDE 1/4 INCH TO 3/4 INCH.
3. TUBE: UNOBSTRUCTED, BORESCOPED WITHIN LAST 180 DAYS IAW TM9-1000-202.
4. BREECHBLOCK: SMOOTH OPERATION, COMPLETE CLOSING.
5. FIRING MECHANISM: PROPER FUNCTIONING, FIRING PIN SERVICEABLE.

PULL TO READ SYSTEM PRESSURE

CAUTION

ALWAYS PLACE RAMMER IN STOWED POSITION WHEN ELEVATING CANNON

CAUTION

COVER MUST BE CLOSED WHEN NOT IN USE

PRECHARGE BLADDER WITH NITROGEN 7 TO 8 PSI BEFORE FILLING ACCUMULATOR WITH HYDRAULIC FLUID.

CHECKING FLUID LEVEL
PER TM 9-2350-314-10

1. REMOVE DUST CAP.
2. THREAD DIPSTICK RETAINER COMPLETELY INTO BELLOWS BOSS.
3. SLIDE DIPSTICK IN UNTIL IT BOTTOMS OUT.
4. PUSH DIPSTICK INTO RESERVOIR WHILE OPENING BLEED VALVE AT THE TOP OF RESERVOIR TO BLEED AIR OUT. CLOSE VALVE WHEN ALL AIR HAS BEEN BLED OUT.
5. READ TEMPERATURE ON DIPSTICK.
6. COMPARE DIPSTICK TEMPERATURE READING TO RESERVOIR READING. IF DIFFERENCE IS LESS THAN 10°F, GO TO STEP 7. IF DIFFERENCE IS GREATER THAN 10°F, ADJUST FLUID LEVEL PER TM9-2350-314-10.
7. REMOVE AND STOW DIPSTICK.
8. RE-INSTALL DUST CAP.

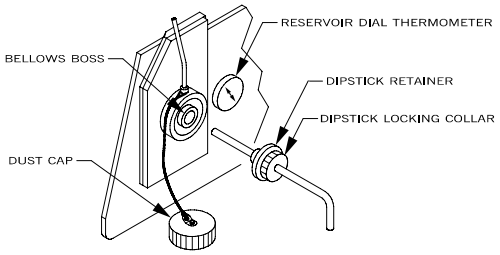


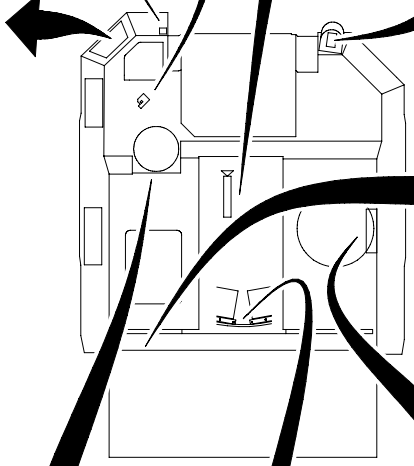

M825A1. NEAR ↑ LOCK. PIN HOLE
M483A1. M107+SPACER. FAR HOLE

THIS SIDE OUT FOR ALL PROJECTILES

↑ M864. THIS LOCKING PIN HOLE

M549A1. ↑ THIS LOCKING PIN HOLE

CAUTION

HIGH INTENSITY NOISE HEARING PROTECTION REQUIRED

CAUTION

HIGH INTENSITY NOISE HEARING PROTECTION REQUIRED

CREW SEAT STOWAGE PROCEDURE

1. FOLD SEAT BOTTOM IN HALF (FRONT HALF ON TOP OF REAR HALF).
2. PUSH FOLDED SEAT BOTTOM UP TO VERTICAL POSITION.
3. PLACE FOOTREST BEHIND RETAINERS MARKED "A".
4. BUCKLE SEAT BELT.
5. DRAPE SEAT BELT OVER BUNGEE CORD.
6. ENGAGE BUNGEE CORD BEHIND TABS MARKED "B".
7. LIFT AND ROTATE BACKREST DOWN.

ABBREVIATED PROCEDURE CONSISTS OF STEPS 1,2,5&7

22pc001m

## 2-10 OPERATION OF OPTICAL FIRE CONTROL INSTRUMENTS.

AFCS/PDFCS eliminates use of optical fire control equipment in laying vehicle for deflection and elevation during indirect fire missions. However, all optical fire control equipment must be emplaced, aligned, and ready for use, as time permits, in the event the AFCS/PDFCS should fail. Fire control equipment is still the only means used to track a target during direct fire missions.

### 2-10.1 M140/M140A1 Alignment Device.

**WARNING**

**RADIATION** 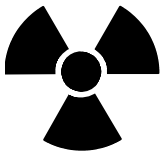 **HAZARD**

**TRITIUM GAS (H3)**

The M140 alignment device is radioactively illuminated. Check for presence of illumination in a low light environment. If illumination is not present, notify local radiation safety officer. Do not attempt to repair.

**NOTE**

To assure the M140/M140A1 alignment device is in collimation and can be used for quick alignment procedure, the fire control instruments must first be boresighted using either distant aiming point or test target method. See para 2-16.7 for checking the alignment device while boresighting on the test target.

a. M140/M140A1 alignment device is used to check alignment of the M117A2 panoramic telescope with the gun tube.

**NOTE**

Ensure mounting surfaces are clean and free of burrs. If dovetail has burrs, notify unit maintenance.

## 2-10 OPERATION OF OPTICAL FIRE CONTROL INSTRUMENTS - CONTINUED

### 2-10.1 M140/M140A1 Alignment Device - Continued

b. Place M140/M140A1 alignment device (1) onto mount (2). Secure in position, by turning lever (3). Make sure it is secure.

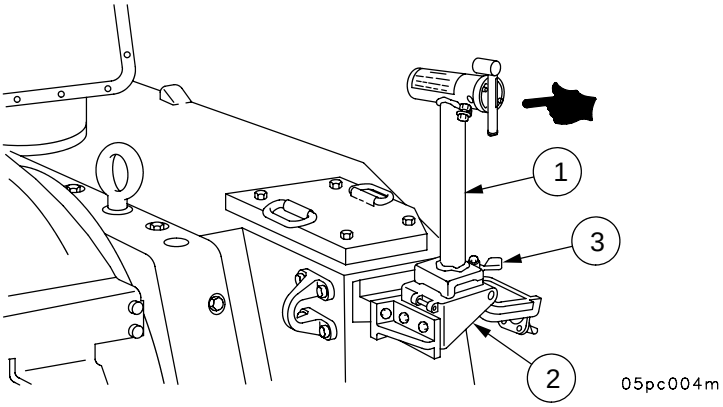


### 2-10.2 Installing Telescope M117A2.

**CAUTION**

Ensure that M145A1 sight mount switch is OFF.

Install M117A2 telescope and secure with two latches (1).

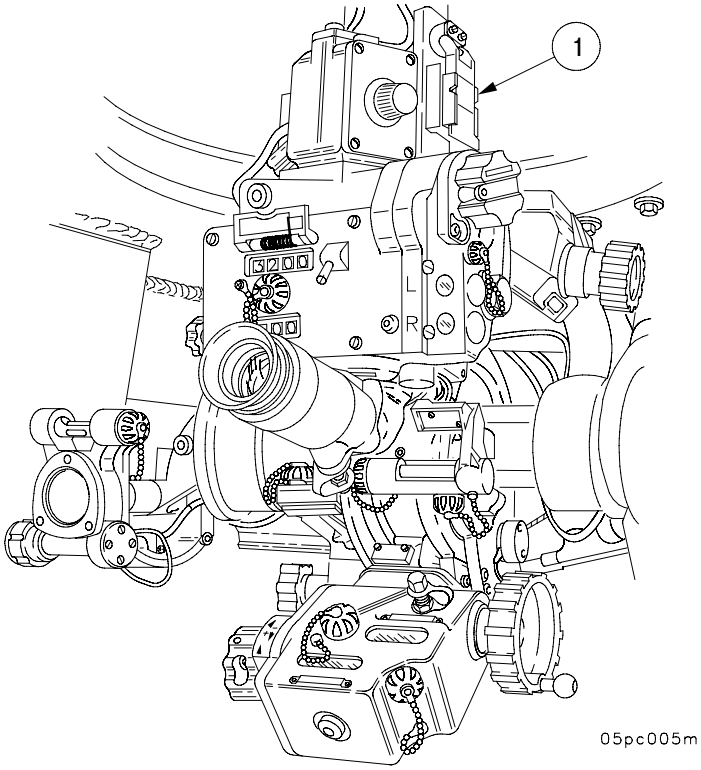

## 2-10 OPERATION OF OPTICAL FIRE CONTROL INSTRUMENTS - CONTINUED

### 2-10.3 Operating Telescope M117A2 and Mount M145A1.

a. Direct/indirect fire bar knob (1). Change deflection in 5 mil increments for direct fire.

b. Azimuth deflection knob (2). Turn to set azimuth reset counter and rotate telescope head; also sets azimuth counter.

c. Cross-level knob (3). Turn to center cross level vial (8).

d. Gunner's aid knob (4). Turn to set gunner's aid counters (5).

e. Gunner's aid counters (5). Visual correction factor for individual weapon.

f. Boresight detent shaft (6). Changes mil reading of azimuth counter during boresighting.

g. Pitch-level vial (7).

h. Cross-level vial (8).

i. Elevation handwheel (9). Turn to set elevation counter (10).

j. Elevation counter (10). Shows quadrant elevation.

k. Correction counter (11). Registers correction value for individual weapon in mils.

l. Elevation correction knob (12). Turn to set correction counter (11).

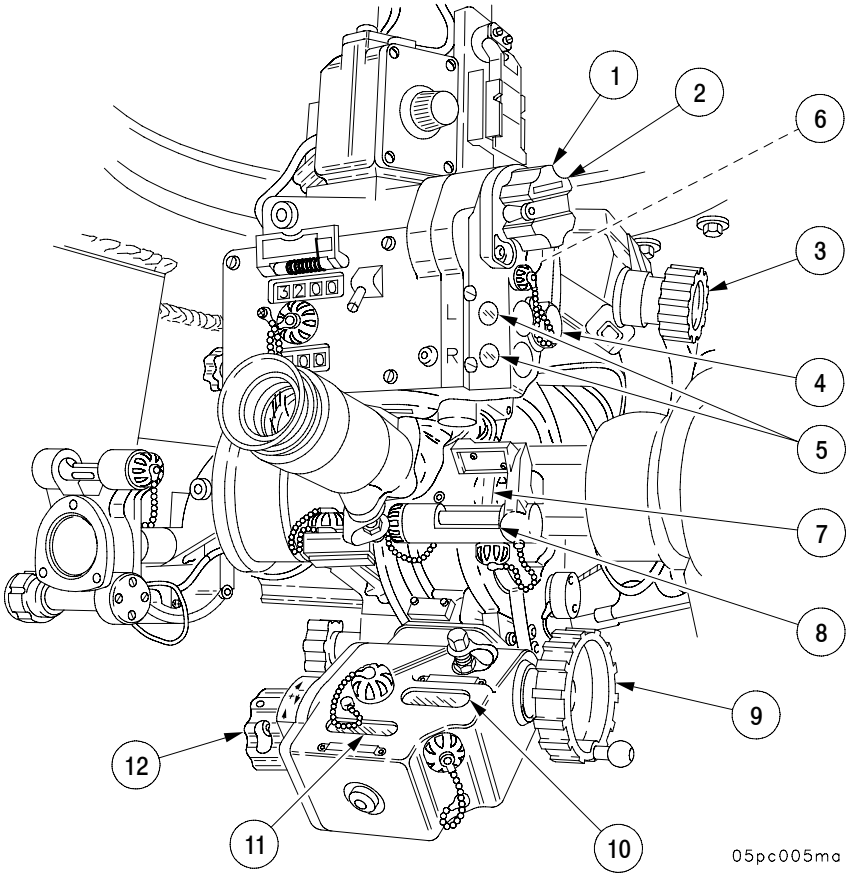

# 2-10 OPERATION OF OPTICAL FIRE CONTROL INSTRUMENTS - CONTINUED

## 2-10.3 Operating Telescope M117A2 and Mount M145A1 - Continued

m. Elevation level vial (13).

n. Pitch knob (14). Turn to center pitch level vial (7).

o. Quadrant level knob (15). Turn to center quadrant cross level vial (16).

p. Quadrant cross level vial (16).

q. Toggle switch (17). Push up to turn on lamps.

r. Reset knob (18). Push in and turn to reset the azimuth reset counter (19).

s. Reset counter (3200 mil) (19). Registers azimuth travel in mils.

t. Azimuth counter (3200 mil) (20). Registers azimuth travel in mils.

u. Door release (21). Move to right to open azimuth counter door.

v. Elevation knob (22). Turn to adjust reticle up or down 300 mils.

w. Quadrant seat (23). Set gunner's quadrant M1A1 here for fine elevation adjustment.

x. Rheostat knob (24). Turn to vary intensity of light for reticle pattern.

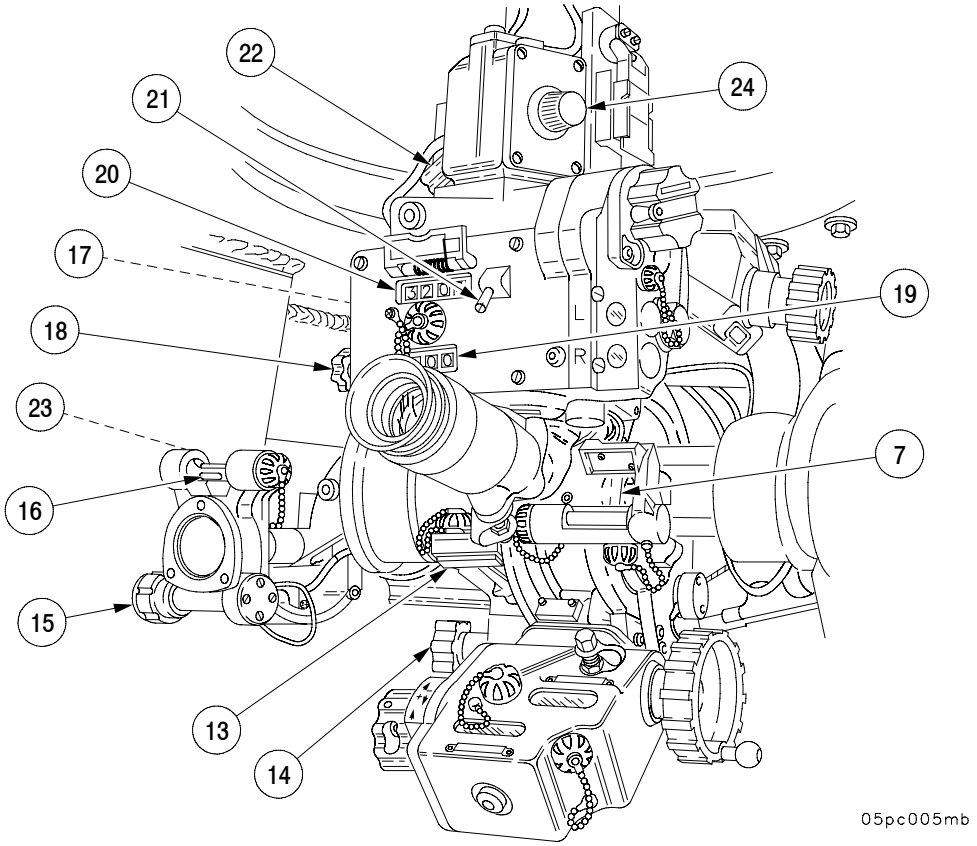

## 2-10 OPERATION OF OPTICAL FIRE CONTROL INSTRUMENTS - CONTINUED

### 2-10.4 Alignment of Telescope M117A2.

**NOTE**

Parallax occurs when ballistic cover is not perpendicular to line of sight of PANTEL. To eliminate this refraction problem, keep ballistic cover perpendicular to line of sight of M140/M140A1 alignment device and PANTEL while checking boresighting. Tolerance is ± 0.5 mils.

Sighting through PANTEL eyepiece at M140/M140A1 alignment device, line up apertures as shown. At this setting, PANTEL is in close alignment with gun tube.

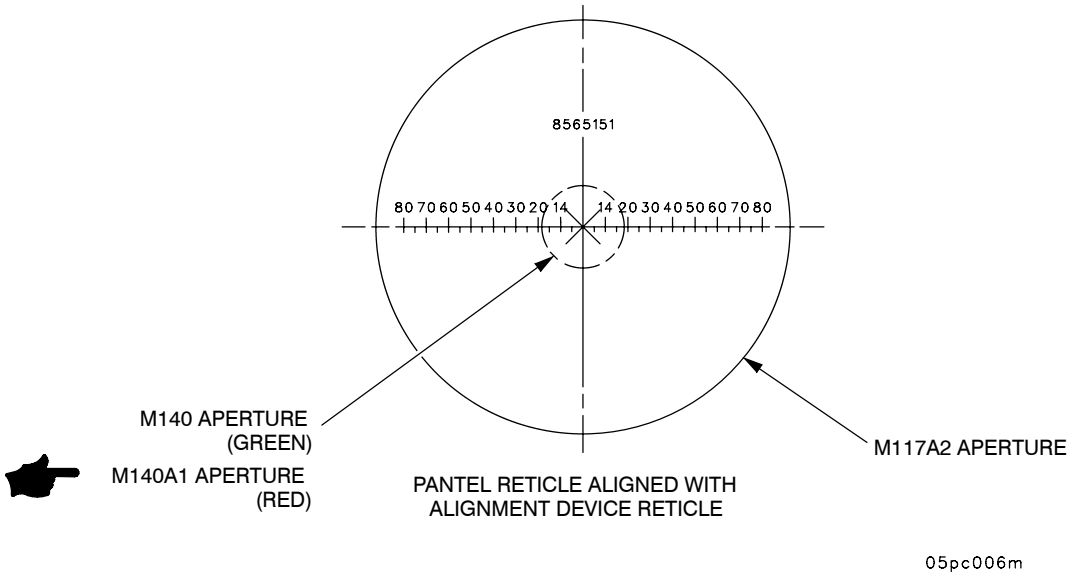

# 2-11 OPERATION OF AUTOMATIC FIRE CONTROL SYSTEM (AFCS).

## 2-11.1 AFCS Operating Modes.

The AFCS functions are performed during three operating modes. These modes are Training, Normal Operations, and Maintenance.

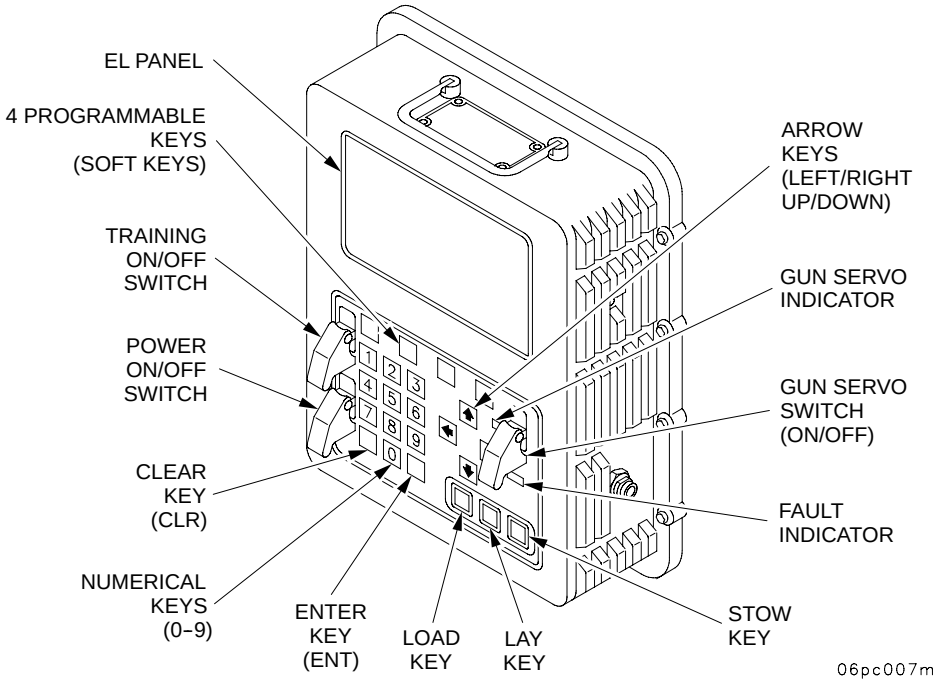


2-11.1.1 Training Mode. The AFCS has a Built-In Training Device (Embedded Trainer). This can be used as a tutorial device to train, maintain, improve, and evaluate crew efficiency/performance. This function allows for simulating Move and Fire Missions under a variety of battlefield scenarios. These include: Shoot Heavy, Move Heavy, Modified Balanced, as well as Degraded conditions (for AFCS), all without need for radio communications (AFCS simulates all radio communications so training can be accomplished without POC assets). In addition, the Embedded Trainer can be run from a Beginner's Tutorial option through a full scale scenario.

2-11.1.2 Normal Operation Mode. During the normal operation mode, there are submodes which make up initializing the system navigation, emplacement, and firing the howitzer. These submodes are initialization, travel, and fire mission.

2-11.1.3 Maintenance Mode. This mode is designed to be used by the crew to do initial troubleshooting of a failure in the AFCS, isolate to an LRU and expedite repair, and view detailed software configuration information for each LRU/CPCI.

## 2-11.2 AFCS Operating Controls and Indicators.

a. GUN SERVO Indicator Lamp. This amber indicator lamp will come on only during AFCS movement of the weapon. Additionally, the lamp stays on when the servos position the weapon on command LAY.

b. GUN SERVO ON/OFF Switch. This toggle switch enables gun servo units. Lifting guard and placing switch in ON position allows AFCS to control gun servo valves. (This is required for Gun Laying by AFCS, also needed for STOW and LOAD commands by AFCS.) Closing switch guard will automatically place switch in OFF position.

c. Arrow Keys (up/right/down and left). Pressing proper key will move highlighted area of display on EL Panel.

# 2-11 OPERATION OF AUTOMATIC FIRE CONTROL SYSTEM (AFCS) - CONTINUED

## 2-11.2 AFCS Operating Controls and Indicators - Continued

d. FAULT Indicator Lamp. This indicator lamp will come on when a failure has been detected by internal BIT of AFCS.

e. STOW Key. With GUN switch ON, pressing STOW key will automatically return gun to a position above the travel lock. (Final tube positioning to secure gun in travel lock must be done with gunner's/COS control handles.)

f. LAY Key. With GUN switch ON, pressing LAY key will automatically drive gun to Commanded (CMD) position by AFCS (in proper azimuth and elevation).

g. LOAD Key. With GUN switch ON, pressing LOAD key during high firing angles will automatically return gun to a preselected low elevation angle. This allows easier loading of gun.

(1) During Fire Mission. Pressing LOAD key during a Fire Mission will return gun to preselected load elevation and traverse gun to LAY position.

(2) Prior to Fire Mission. Pressing LOAD key prior to a Fire Mission (Section in Order) will return gun to preselected load elevation and traverse to Final Protective Fire (FPF) azimuth.

**NOTE**

If there is no FPF, the gun will traverse to the assigned center sector of fire.

h. KEYPAD (Numerals 0 through 9, CLR--clear, and ENT--enter keys). These keys are used for entering data. The CLR key is used to delete a numeric entry within the cursor field on EL Panel. The ENT key is used to insert a numeric entry into highlighted field on EL Panel.

**NOTE**

If DU POWER is switched to OFF, alignment data will have to be reentered at next power up. Navigation Restart is a 15-minute procedure. Closing switch guard will not place this switch in OFF position. Switch must be manually put in OFF position.

i. POWER ON/OFF Switch. Lifting the guard and placing switch in ON position powers up AFCS. System will then automatically perform self-test (BIT). After BIT, AFCS will control gun hydraulics when GUN ON/OFF switch is ON. At this time, some gun movement may occur. Do not power down DU (AFCS) when entering/exiting different modes. After AFCS has been powered down, the AFCS will power up and be operational in approximately 3-4 minutes.

j. TRAINING ON/OFF Switch. Lifting the guard and placing switch in ON position while AFCS is at the select operating mode menu allows operator to select Training Mode. (To exit Training Mode, either finish scenario and exit via appropriate soft key, or place TRAINING ON/OFF switch to OFF and select appropriate soft key to exit.)

k. Soft Keys (four). Function of keys depends on menu being displayed (worked). Lowest display line identifies function.

# 2-11 OPERATION OF AUTOMATIC FIRE CONTROL SYSTEM (AFCS) - CONTINUED

## 2-11.2 AFCS Operating Controls and Indicators - Continued

l. EL Panel. Displays various menus, operator alerts/warnings, messages and orders/commands. Information shown on the EL panel will vary, but format will remain the same. The format will show possible fire mission data fields, advisory messages, instructions, and commands. The EL panel data fields are numbered as follows:

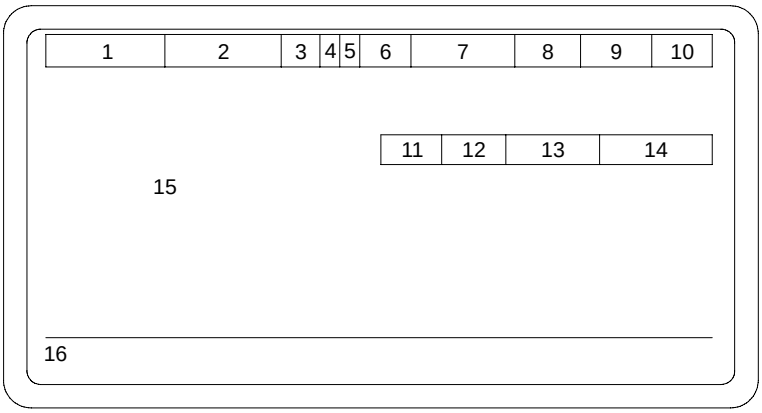


06pc088m

(1) Field 1, AFCS Operational Mode - The following can appear:

NORMAL - This indicates that the NORMAL OPERATIONAL mode is selected.

EMB TNG - This indicates that the TRAINING mode is selected.

MAINT - This indicates that the maintenance mode is selected.

REV XX - This indicates system software version identifier. Shown only until an AFCS mode selection is made.

(blank) - This indicates that the AFCS software is undetermined.

(2) Field 2, FIRE MISSION STATUS - The following can appear:

CHKFIRE - This indicates that a checkfire status exists on the AFCS. This message will appear in inverse video.

FIREMSN - This indicates that the AFCS is performing a fire mission. This message will appear in inverse video.

(blank) - This indicates that the AFCS is in normal operating status awaiting orders.

(3) Field 3, MOVE ORDER INDICATOR - The following data may appear.

MO - This indicates that the AFCS has an active move order. This indicator will appear in inverse video.

(blank) - This indicates that there is no move order active.

# 2-11 OPERATION OF AUTOMATIC FIRE CONTROL SYSTEM (AFCS) - CONTINUED

## 2-11.2 AFCS Operating Controls and Indicators - Continued

(4) Field 4, WARNING MESSAGE INDICATOR -

W - If the letter W appears in inverse video a warning message has been queued.

(blank) - This indicates that there are no warning messages for the operator to view.

(5) Field 5, RECEIVED MESSAGE INDICATOR -

R - If the letter R appears in inverse video a received message has been queued.

(blank) - This indicates that there are no received messages for the operator.

(6) Field 6, ALIGN TIME TO GO INDICATOR - This three (3) character field indicates that the AFCS is performing navigation alignment and should be complete in "nnn" (0...900) seconds or indicates that the AFCS has initiated a command sequence with the Navigation Device. Following are the data that may appear in this field, in highest to lowest priority order:

ZPT - This indicates that the DRU has indicated a ZUPT Stop has been requested.

CMD - This indicates that the AFCS has initiated a command sequence with the Navigation Device and the command sequence has not yet been completed.

POS - This indicates that the Navigation Device has requested a position update.

nnn - This three digit number indicates the number of seconds remaining before navigation alignment is complete. If the most significant digit is not the left most digit, the value will be padded with zeros on its left side.

(blank) - If the field is blank then the AFCS is not undergoing navigational alignment.

(7) Field 7, FUNCTION STATUS - Indicates the status of the various AFCS functions. The following data may appear in this field when in normal or training operational modes:

"NACW" - Each letter of this string indicates that a function is not available or non-operational. The letters represent the status of the following functions:

"N" - Navigation function

"A" - GPS Aiding function

"C" - Communications Function

"W" - Weapon Control Function

" " - Spare

(blank) - The absence of a letter indicates that the associated function is available.

(8) Field 8, LOAD KEY STATUS - this four (4) character field indicates the status of the load key. The following data may appear in this field:

LOAD - This indicates that the load key is active. If this field is highlighted, it indicates that the tube is within the load elevation.

(blank) - This indicates that the load key is inactive.

# 2-11 OPERATION OF AUTOMATIC FIRE CONTROL SYSTEM (AFCS) - CONTINUED

## 2-11.2 AFCS Operating Controls and Indicators - Continued

(9) Field 9, LAY KEY STATUS - This three (3) character field indicates the status of the LAY key. The following may appear in this field:

LAY - This indicates that the LAY key is active. If this field is highlighted, it indicates that the tube is at the latest LAY commands.

(blank) - This indicates that the LAY key is inactive.

(10) Field 10, STOW KEY STATUS - This three (3) character field indicates the status of the STOW key. The following data may appear in this field:

STOW - This indicates that the STOW key is active. If this field is highlighted it indicates that the tube is within the STOW position.

(blank) - This indicates that the STOW key is inactive.

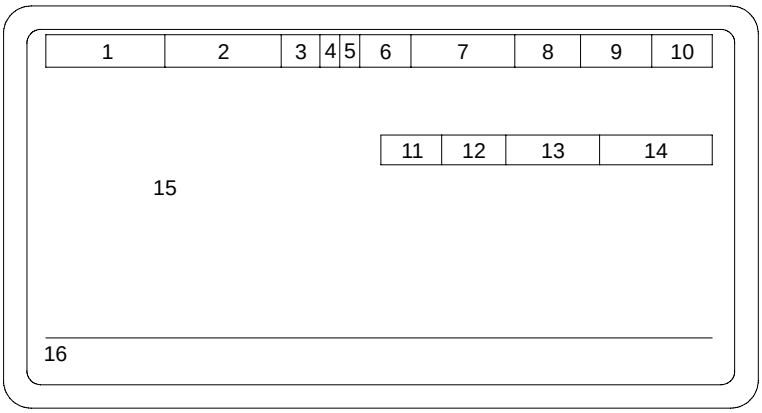


06pc088m

(11) Field 11, Mission Priority - The following may appear:

FPF - This indicates that the mission is a Final Protective Fire mission.

PRI - This indicates that the mission is a Priority mission.

(blank) - This indicates that the mission is a Normal mission.

(12) Field 12, Mission Urgency - The following may appear:

DC - This indicates that the mission has an associated Danger Close status.

TOT - This indicates that the AFCS is processing a Time On Target fire mission.

(blank) - This indicates that the AFCS has Normal urgency for this mission.

(13) Field 13, Tube Temperature Status - One of the following three will appear:

COLD - This indicates that the tube temperature is in a cold status.

WARM - This indicates that the tube temperature is in a warm status.

HOT - This indicates that the tube temperature is in a hot status.

(blank) - This indicates that the tube temperature is not available.

# 2-11 OPERATION OF AUTOMATIC FIRE CONTROL SYSTEM (AFCS) - CONTINUED

## 2-11.2 AFCS Operating Controls and Indicators - Continued

(14) Field 14, Safe Time in Tube Status - This indicates the current safe time for a round to be in the tube. The time is shown in minutes; refer to para 2-17d. When the tube is cold, this indicator is blank to indicate that there is no limit on the safe time in the tube.

(15) Field 15, Various instructions and warnings will appear in this area, as necessary. Some of the advisory messages and/or instructions displayed in field 15 are listed below:

Instructions and warnings which could appear on the FIRE MISSION DISPLAY:

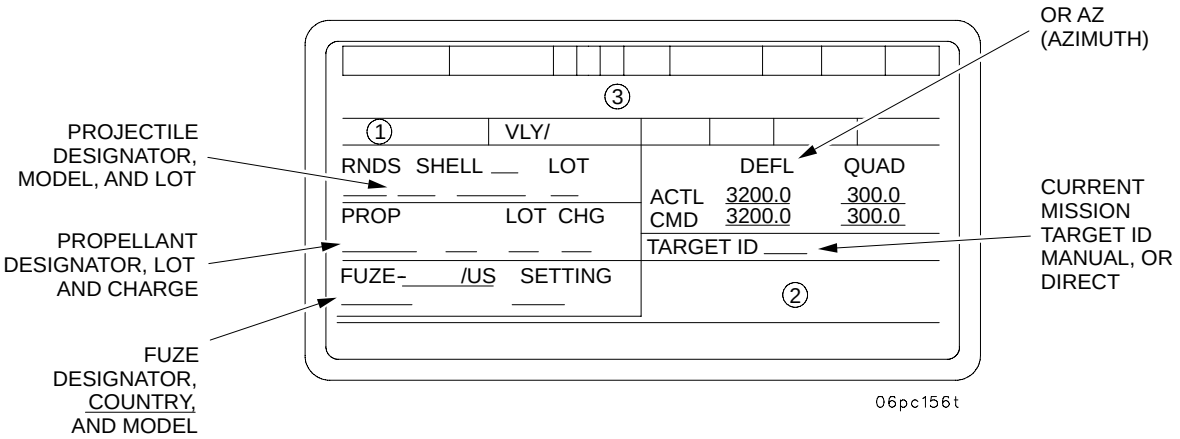


Listed below are the legal values for each field of fire mission display.

VLY / = current volley being displayed: 1/1, 1/2 or 2/2

**NOTE**

The 1/1, 1/2, and 2/2 data shall not be displayed for operator initiated fire missions and missions that are in fire commands format.

RNDS = Number of rounds remainin to fire 1..99
SHELL = Shell model and mnemonic
SHELL LOT = A..Z
PROP = Propellant model
PROP LOT = A..Z
CHG = Propellant charge designator (see Table 2-1)
FUZE = Fuze model, Country and mnemonic
SETTING = Computed fuze setting, “PD” or “DELAY”
DEFL or AZ = 0.0..6399.9 mils
QUAD = -200.0+1600.0 mils
TARGET ID = Current mission target identification

# 2-11 OPERATION OF AUTOMATIC FIRE CONTROL SYSTEM (AFCS) - CONTINUED

## 2-11.2 AFCS Operating Controls and Indicators - Continued

(1) Blank field1 = Fire mission is not a sheaf
SHEAF PT = This gun is participating in a multigun sheaf
SHEAF a/s = This gun is conducting a single gun sheaf
where: a..Current aimpoint number; b..Number of sheaf points

**NOTE**

Some of the alerts listed below will result in a "OK TO SHOOT? YES, NO" short error message to the AFCS operator.

(2) Blank field 2 = displayed when none of the following apply
REMEMBER TO UPDATE INVENTORY = Direct or manual fire mission and none of the following apply
WARNING TUBE IS NOT IN LAY POSITION = WC is operational and the tube is not in the lay window
TUBE MUST BE LAID MANUALLY = WC is not operational
CALL FDC IF ROUND IN TUBE = Awaiting tube clear and crew not authorized to fire
PRESS SHOT OR CLEAR TO ACK CEASELOAD = AFCS has received a ceaseload request
SECTOR OF FIRE VIOLATION = Gun-target line is outside the defined sector of fire
SITE VIOLATION = Firing parameters violate defined mask
INSUFFICIENT AMMO SHELL/FUZE/PROP = Insufficient inventory quantities
INSUFFICIENT AMMO SHELL/FUZE = Insufficient inventory quantities
INSUFFICIENT AMMO SHELL/PROP = Insufficient inventory quantities
INSUFFICIENT AMMO FUZE PROP = Insufficient inventory quantities
INSUFFICIENT AMMO SHELL = Insufficient inventory quantities
INSUFFICIENT AMMO FUZE = Insufficient inventory quantities
INSUFFICIENT AMMO PROP = Insufficient inventory quantities
MAX TUBE EL EXCEEDED = Computed QE exceeds the defined maximum tube elevation.
MINIMUM QE VIOLATED = The Gun Tube has violated the minimum QE as entered by the AFCS operator. Enter Minimum Firing QE Display.

(3) Blank field 3 indicates that none of the following apply
FIRE WHEN READY = Fire at will
UNDER VOICE ORDERS = Manual fire mission
COMPUTING DO NOT LOAD = AFCS computing or waiting for operator response
DO NOT LOAD = Do not load mission
LOAD LAY THEN PRESS READY = At my command or Copperhead mission
WAIT FOR COMMAND = At my command after ready
WAIT XXX SECONDS = Time to fire mission or continuous interval mission
FIRE = Command to fire
FPF END OF MISSION = EOM of ceaseload during FPF
EARLY END OF MISSION = EOM received after load but before all rounds fired
CEASELOAD = Ceaseload received after load but before all rounds fired

# 2-11 OPERATION OF AUTOMATIC FIRE CONTROL SYSTEM (AFCS) - CONTINUED

## 2-11.2 AFCS Operating Controls and Indicators - Continued

Instructions and warnings which could appear on the SECTION IN ORDER DISPLAY are as follows.

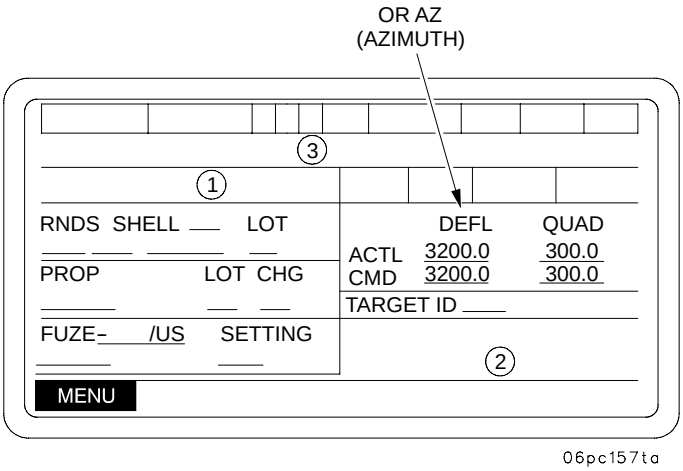


(1) Blank field 1, indicates that none of the following conditions apply:

COMPUTING FPF/PRI
NO FPF/PRI EXISTS
UNABLE TO COMPUTE
MASK TRAJ FAILURE
SECTOR VIOLATION
MASK VIOLATION
INSUFFICIENT AMMO
NO FUZE INVENTORY
NO PROJ INVENTORY
NO PROP INVENTORY
BAD PROJ LOT/MODEL
NO AMMO INV COMBO
INVALID AMMO COMBO
INSUFFICIENT RANGE
NO SOLUTION
NO FFE TYPE MISSION
UNASSIGNED FPF/PRI
BAD FPF/PRI LOC
TARGET TOO CLOSE
MAX TUBE EL EXCEEDED

## 2-11 OPERATION OF AUTOMATIC FIRE CONTROL SYSTEM (AFCS) - CONTINUED

### 2-11.2 AFCS Operating Controls and Indicators - Continued

(2) Instructions and warnings which could appear in field (2):

SECTION IN ORDER AT FIRE POINT
SECTION IN ORDER WITHIN FIRE AREA

(3) Instructions and warnings which could appear in field (3):

DO NOT MOVE/DO NOT LOAD
DO NOT MOVE
MOVES ALLOWED
MOVES ALLOWED DO NOT LOAD

**Table 2-1 Charge Displayed Based on Propellant Model**

| Charge Displayed | Based on propellant model |
|---|---|
| 3G, 4G, 5G | M3, M3A1, M3A1BG, M3C2, DM62 |
| 3G, 4G, 5G, 6G | MLE56 |
| 6W, 7W, 8W, 9W, 9BW | MLE69 |
| 3W, 4W, 5W, 6W, 7W | M4A1, M4A2, M4C3, M4C4, DM42, DM42B1, NM23 |
| 8 | M119A1, EBO-5 |
| 7R | M119A2, M119A2BG, NR13C1 |
| 8R | M203 |
| 8S | M203A1 |
| 1L, 2L | M231 |
| 3H, 4H, 5H | M232/M232A1 |

# 2-11 OPERATION OF AUTOMATIC FIRE CONTROL SYSTEM (AFCS) - CONTINUED

## 2-11.2 AFCS Operating Controls and Indicators - Continued

(16) Field 16, Function Key Label - This block is used to identify the function of the four soft keys.

Soft key messages and task actions are also displayed in this area to give the AFCS operator a means of keeping track of various AFCS related actions during AFCS operation. Typical messages are shown below:

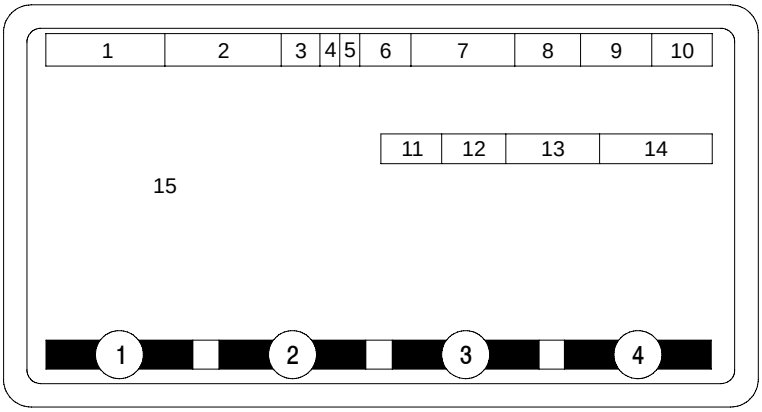


06pc088m

(1) Function Key 1, indicates what may appear in this field.
SELECT
NEXT MSG
+/-
MARK
ADJ
PREV
MENU
VERIFY
PREV

(2) Function Key 2, indicates what may appear in this field.
USE ALL
FINISHED
NEXT PAGE
+/-
FINISHED
USE LOCAL
FFE1
INVENTORY
ARRIVED
UPDATE EFC
CLEAR

(3) Function Key 3, indicates what may appear in this field.
CHECK
DELETE
YES
USE GPS
EMPLACE
STEERTO
FFE2
SEND
CLEAR
EXPECTED

(4) Function Key 4, indicates what may appear in this field.
CANCEL
ACK
EOM
NO
CONTINUE
MOVING
EXIT
ABORT

# 2-11 OPERATION OF AUTOMATIC FIRE CONTROL SYSTEM (AFCS) - CONTINUED

## 2-11.2 AFCS Operating Controls and Indicators - Continued

HIGH PRIORITY MESSAGES

"AFCS CHECKFIRED", "ACK"
"FIRE MISSION RECEIVED", "ACK"
"POWER FAILURE SHUTDOWN", "ACK"
"ON AUX POWER START VEHICLE", "ACK"
"AUX BATTERY NOT CONNECTED", "ACK"
"VEHICLE AND AUX POWER OK", "ACK"
"NAV OUT-NSP POWER UP BIT", "ACK"
"NAV EXCESSIVE RATE RESTART REQ", "ACK"
"ALIGN ABORTED RESTART REQD", "ACK"
"MAP UPDATED NAV UPDT REQUIRED", "ACK"
"MAP/NAV CONFLICT UPDATE NAV", "ACK"
"OVERIDE AZ LIMITS", "YES", "NO"
"NAV OUT-DRU BIT FAIL", "ACK"
"NAV OUT-DRU DISCONNECT", "ACK"
"NAV OUT-NSP DISCONNECT", "ACK"
"AUX POWER LOW", "ACK"
"FIRE MISSION RCVD", "ACCEPT", "REJECT"
"MAP DATUM UPDATE REQUIRED", "ACK"
"NAV OUT-DRU INERTIAL FAIL", "ACK"
"NAV OUT-DRU OP FAIL", "ACK"
"AFCS FIRE CONTROL ALIGNMENT REQD", "ACK"

LOW PRIORITY MESSAGES

"INVALID SOFTWARE CONFIGURATION", "ACK"
"NAV POS UPDATE REQUIRED", "ACK"
"NAV POS UPDATE NO LONGER REQ", "ACK"
"ZUPT REQUIRED", "ACK"
"ZUPT NO LONGER REQUIRED", "ACK"
"MOTION DURING POS UPDATE", "ACK"
"POS UPDATE INTERRUPTED", "ACK"
"POS UPDATE N/E EXCESSIVE", "ACK"
"POS UPDATE N/E RJTD", "ACK"
"POS UPDATE ALTITUDE EXCESSIVE", "ACK"
"POS UPDATE ALTITUDE RJTD", "ACK"
"NAV RESTART RJTD VEH MOVING", "ACK"

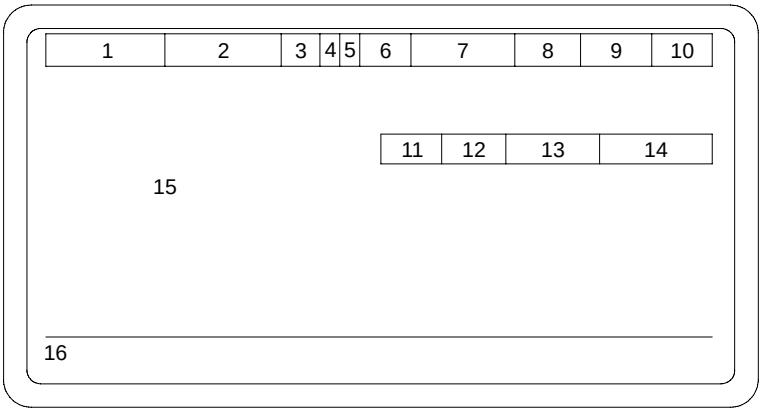


06pc088m

# 2-11 OPERATION OF AUTOMATIC FIRE CONTROL SYSTEM (AFCS) - CONTINUED

## 2-11.2 AFCS Operating Controls and Indicators - Continued

LOW PRIORITY MESSAGES - CONTINUED

"NET ADDR RJTD NEW SUBSBR FILE", "ACK"
"INVALID OPERATIONAL MODE", "ACK"
"NET CONFG UPDTE RJTD FM ACTIVE", "ACK"
"NET ADDR UPDTE RJTD FM ACTIVE", "ACK"
"NAV RESTART RJTD FM ACTIVE", "ACK"
"UPDATE RJTD WRONG NAV MODE", "ACK"
"CLOCK UPDATE RJTD FM ACTIVE", "ACK"
"NAV RESTART RJTD BAD POS", "ACK"
"WPN OUT", "ACK"
"WC SUBSYSTEM OUT", "ACK"
"TUBE TEMP SENSOR OUT", "ACK"
"COMMO OUT", "ACK"
"NETWORK COMMO OUT", "ACK"
"PDIU OR PDIU BUS OUT", "ACK"
"POS UPDATE RJTD BAD POS", "ACK"
"POS UPDATE RJTD HOWITZER MOVG", "ACK"
"POS UPDATE RJTD FM ACTIVE", "ACK"
"POS UPDATE RJTD VEH MOTION", "ACK"
"RESTART RJTD NAV OUT", "ACK"
"POS UPDATE RJTD WRONG NAV MODE", "ACK"
"NET BUSY AMMO", "RETRY", "NO RETRY"
"NET BUSY REQ AMMO", "RETRY", "NO RETRY"
"NET BUSY CHECKFIRE", "RETRY", "NO RETRY"
"NET BUSY DESIGNATE", "RETRY", "NO RETRY"
"NET BUSY FREE TEXT", "RETRY", "NO RETRY"
"NET BUSY VEH STS", "RETRY", "NO RETRY"
"NET BUSY REQ VEH STS", "RETRY", "NO RETRY"
"NET BUSY REQ INT", "RETRY", "NO RETRY"
"NET BUSY SITE DATA", "RETRY", "NO RETRY"
"NET BUSY REQ SITE", "RETRY", "NO RETRY"
"NET BUSY REQ MOV ORD", "RETRY", "NO RETRY"
"NET BUSY MTO TOF", "RETRY", "NO RETRY"
"NET BUSY MTO DENY", "RETRY", "NO RETRY"
"POSITION UPDATE RJTD NAV OUT", "ACK"

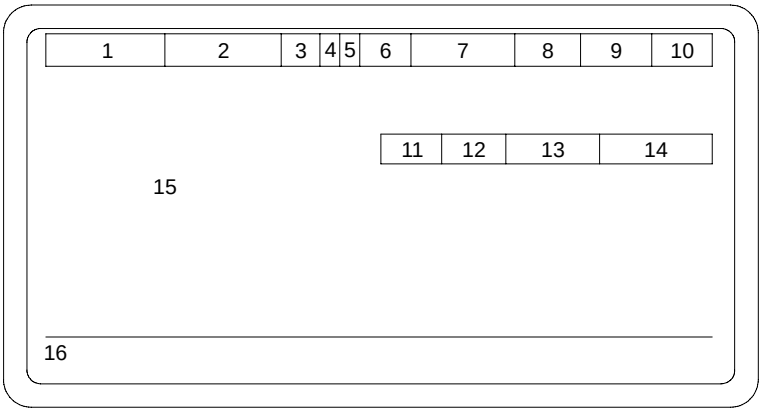


06pc088m

# 2-11 OPERATION OF AUTOMATIC FIRE CONTROL SYSTEM (AFCS) - CONTINUED

## 2-11.2 AFCS Operating Controls and Indicators - Continued

LOW PRIORITY MESSAGES - CONTINUED

"NET BUSY READY", "RETRY", "NO RETRY"
"NET BUSY ROUND COMP", "RETRY", "NO RETRY"
"NET BUSY SHOT", "RETRY", "NO RETRY"
"NET BUSY SPLASH", "RETRY", "NO RETRY"
"NET BUSY TARGET FILE", "RETRY", "NO RETRY"
"NET BUSY UTE BAT", "RETRY", "NO RETRY"
"NO ACK AMMO", "RETRY", "NO RETRY"
"NO ACK REQ AMMO", "RETRY", "NO RETRY"
"NO ACK CHECK FIRE", "RETRY", "NO RETRY"
"NO ACK DESIGNATE", "RETRY", "NO RETRY"
"NO ACK FREE TEXT", "RETRY", "NO RETRY"
"NO ACK VEH STS", "RETRY", "NO RETRY"
"NO ACK REQ VEH STS", "RETRY", "NO RETRY"
"NO ACK VEH INIT", "RETRY", "NO RETRY"
"NO ACK SITE DATA", "RETRY", "NO RETRY"
"NO ACK REQ SITE DATA", "RETRY", "NO RETRY"
"NO ACK REQ MOVE ORD", "RETRY", "NO RETRY"
"NO ACK MTO TOF", "RETRY", "NO RETRY"
"NO ACK MTO DENY", "RETRY", "NO RETRY"
"NO ACK READY", "RETRY", "NO RETRY"
"NO ACK ROUND COMP", "RETRY", "NO RETRY"
"NO ACK SHOT", "RETRY", "NO RETRY"
"NO ACK SPLASH", "RETRY", "NO RETRY"
"NO ACK TARGET FILE", "RETRY", "NO RETRY"
"NO ACK UTE BAT", "RETRY", "NO RETRY"
"PDIU WARNING RECEIVED", "ACK"

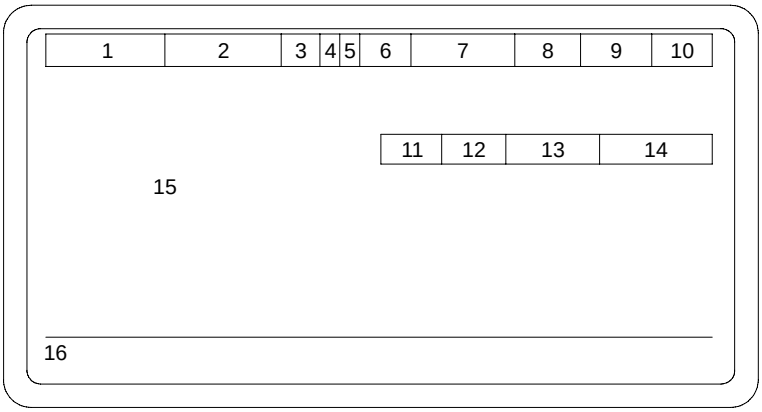


06pc088m

# 2-11 OPERATION OF AUTOMATIC FIRE CONTROL SYSTEM (AFCS) - CONTINUED

## 2-11.2 AFCS Operating Controls and Indicators - Continued

LOW PRIORITY MESSAGES-CONTINUED

"PROP TEMP UPDATE PENDED", "ACK"
"AMMO INVENTORY UPDATE PENDED", "ACK"
"SITE DEFINITION UPDATE PENDED", "ACK"
"DIRECT FIRE RJTD NAV NOT INIT", "ACK"
"DIRECT FIRE RJTD WPN OUT", "ACK"
"DIRECT FIRE RJTD OUTSIDE MAP", "ACK"
"DIRECT FIRE RJTD MAP PENDING", "ACK"
"DIRECT FIRE RJTD IN CHECKFIRE", "ACK"
"DIRECT FIRE RJTD FM ACTIVE", "ACK"
"MANUAL COMMANDS RJTD FM ACTIVE", "ACK"
"MANUAL COMMANDS RJTD CHECKFIRE", "ACK"
"SIMULATED NAV FAILURE", "CLEAR"
"SIMULATED ELECTRICAL FAILURE", "CLEAR"
"SIMULATED HYDRAULIC FAILURE", "CLEAR"
"SIMULATED COMMO FAILURE", "CLEAR"
"SIMULATED WPN FAILURE", "CLEAR"
"SIMULATED NAV FAILURE", "ACK"
"SIMULATED ELECTRICAL FAILURE", "ACK"
"SIMULATED HYDRAULIC FAILURE" , "ACK"
"SIMULATED COMMO FAILURE", "ACK"
"SIMULATED WPN FAILURE", "ACK"
"SIMULATED FAILURES CLEARED", "ACK"
"MOVE RJTD DEST NOT IN MAP", "ACK"
"MOVE RJTD NO MAP", "ACK"
"MOVE RJTD MAP PENDING", "ACK"
"PRESS ACK WHEN TUBE STOWED", "ACK"
"VEHICLE MOTION SENSOR OUT", "ACK"

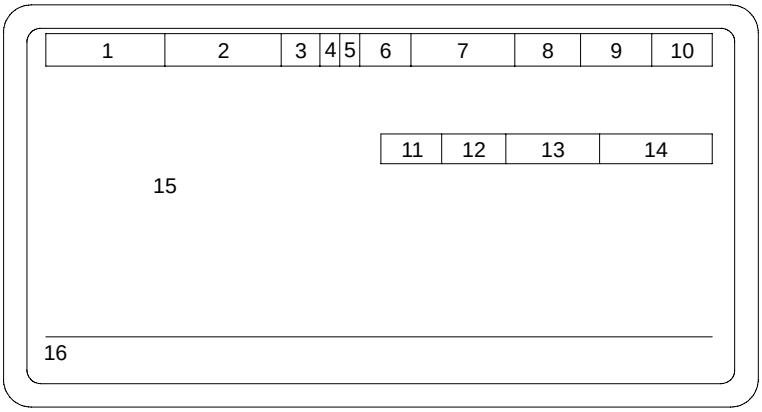


06pc088m

# 2-11 OPERATION OF AUTOMATIC FIRE CONTROL SYSTEM (AFCS) - CONTINUED

## 2-11.2 AFCS Operating Controls and Indicators - Continued

LOW PRIORITY MESSAGES-CONTINUED

"DIRECT FIRE RJTO TGT COMP ERR", "ACK"
"NO BALLISTIC SOLUTION", "ACK"
"PROP TEMP UPDATE REQURIED", "ACK"
"VEHICLE MOTION SENSOR GOOD", "ACK"
"DRU OVERTEMP", "ACK"
"DRU NO LONGER OVERTEMP", "ACK"
"ZONE BOUNDARY CROSSED", "ACK"
"OK TO MOVE OR SHOOT", "ACK"
"EMBEDDED TRAINING OUT", "ACK"
"GPS OUT - PLGR DISCONNECT", "ACK"
"GPS CONNECTED", "ACK"
"GPS OUT - PLGR FAILED", "ACK"
"GPS OPERATIONAL", "ACK"
"GPS ANTENNA FAULT", "ACK"
"GPS ANTENNA OK", "ACK"
"PLGR UNKEYED", "ACK"
"INP/GPS DELTA TOO LARGE", "ACK"
"INP/GPS N/E EXCESSIVE", "ACK"
"INP/GPS N/E REJECTED", "ACK"
"INP/GPS ALT EXCESSIVE", "ACK"
"INP/GPS ALT REJECTED", "ACK"
"POSITION UPDATE BEYOND ZONE", "ACK"
"BORESIGHT UPDT RJTD VEH MOVING", "ACK"
"RESTART REQUIRED", "ACK"
"POSITION UPDATE REQUIRED", "ACK"
"DRU CONNECT", "ACK"
"INSUFFICIENT Y CODE SVS", "ACK"

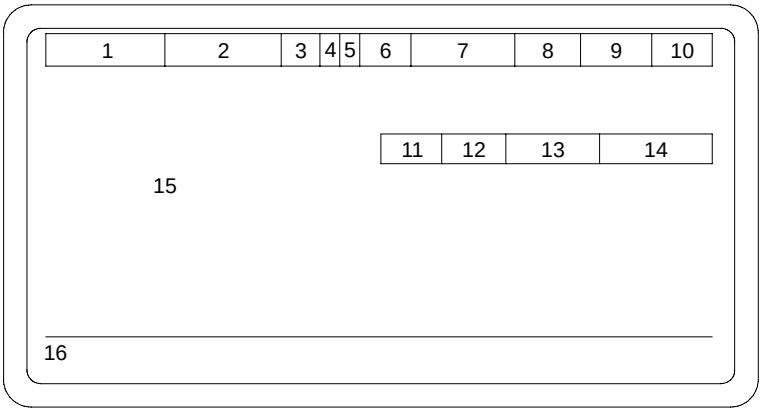


06pc088m

# 2-11 OPERATION OF AUTOMATIC FIRE CONTROL SYSTEM (AFCS) - CONTINUED

## 2-11.3 DC Power Messages.

Three Auxiliary Power messages can appear on any menu being displayed on the DU panel. Operator actions for any message will be the same regardless of the menu on which it is displayed.

2-11.3.1 On Auxiliary Power. If vehicle battery voltage drops to a point below that needed by the Power Conditioner Unit (PCU) to operate the AFCS, the PCU will automatically switch to auxiliary power (backup batteries) to maintain AFCS operation. When the switch to auxiliary power occurs, an audible alert will be sounded over the intercom, and a visual alert will be displayed at the bottom of the menu.

**CAUTION**

Prolonged operation on auxiliary power may cause the AFCS to shut down automatically.

At this time, the vehicle engine must be started to recharge the vehicle batteries.

The operator must press the soft key under ACK to silence the audible alarm and eliminate the message.

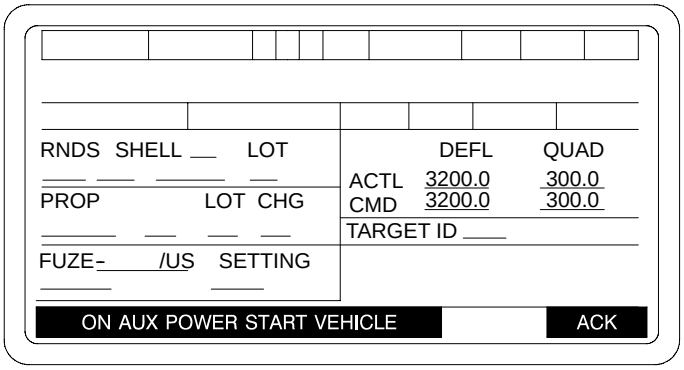


06pc157t

# 2-11 OPERATION OF AUTOMATIC FIRE CONTROL SYSTEM (AFCS) - CONTINUED

## 2-11.3 DC Power Messages - Continued

2-11.3.2 Auxiliary Power Not Available. If the auxiliary power batteries are not functional (e.g., low, damaged, or disconnected), a visual alert will be displayed at the bottom of the menu.

The operator must press the soft key under ACK to eliminate the message. At this time, the vehicle engine must be started and kept running to ensure AFCS operation until auxiliary power is restored.

**NOTE**

This message can also appear during BIT.

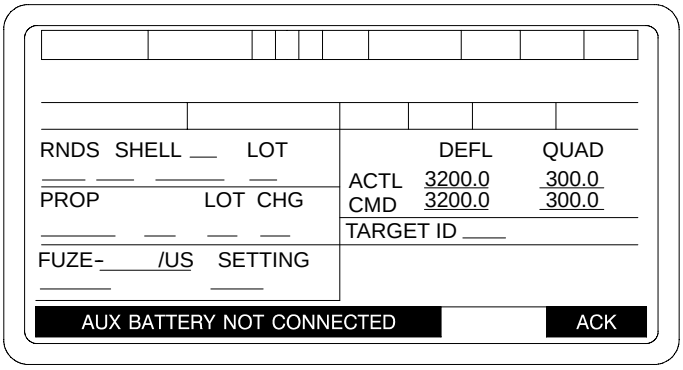


06pc158t

2-11.3.3 Vehicle and Auxiliary Power OK. When the vehicle battery voltage rises sufficiently, the PCU will automatically switch to vehicle power. When the switch occurs, a visual alert is displayed at the bottom of the menu as shown below.

The operator must press soft key under ACK to eliminate the message.

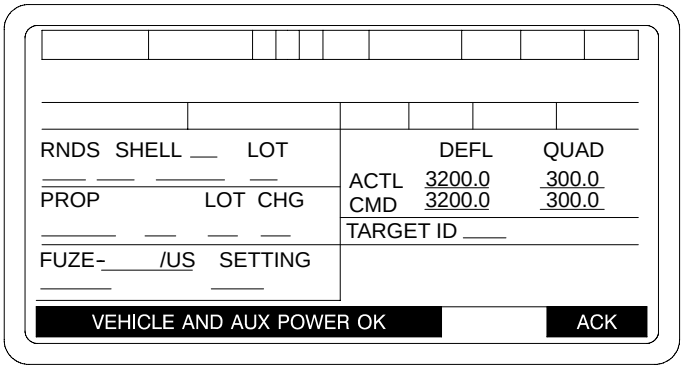


06pc159t

## 2-12 AFCS INITIALIZATION.

### 2-12.1 System Power-Up.

**WARNING**

When operating the PLGR on external power with BA-5800 lithium battery installed, the battery may explode. Ensure battery is removed before connecting power cable to prevent serious injury or death.

**NOTE**

- M93 MVS must be installed and connected prior to turning the vehicle MASTER power switch ON.
- PLGR should be installed and powered prior to turning on the DU of the AFCS in order for the AFCS to use the PLGR data.
- The following steps must be completed prior to POWERING UP and INITIALIZATION of the AFCS.

a. Outside the howitzer:
   1. Left front drive sprocket must be within 1 meter of SCP.
   2. Gun tube in travel lock.
   3. M93 Chronograph connections verified.
   4. FM VOICE/DIGITAL Radio antennas are properly mounted, cables and ground connections verified.
   5. PLGR antenna cable connections verified.

b. Inside the howitzer:
   1. Turret lock in “LOCKED” position.
   2. 1553 BUS terminator connection verified.
   3. PLGR ground connection verified.
   4. PLGR installed.
   5. Set MASTER switch to ON.
   6. Ensure 10 PCU switches are ON.
   7. Turn PLGR ON, FILL verified.
   8. Turn radios ON, and perform VOICE radio check.
   9. Idle engine at 1000 to 1200 RPMs.
   10. POWER UP AFCS.

## 2-12 AFCS INITIALIZATION.

### 2-12.1 System Power-Up - Continued

With the PLGR in the PLGR mount and all external cables attached, press the ON/BRT key on the PLGR key pad. The PLGR should power up automatically and perform its self-test (BIT). Operate the PLGR in accordance with the PLGR TM 11-5825-291-13.

If the PLGR does not have a current key (i.e. the PLGR was previously "zeroized," newly installed or the key has expired), then load a valid key in accordance with the PLGR TM 11-5825-291-13, Section 3.6.

**NOTE**

To load a key, the DRUH must be off, or the P4 DRUH-PLGR Signal Connector must be disconnected to cause a PLGR COM FAIL. Simple re-attachment of P4 DRUH-PLGR Signal Connector after PLGR keying will automatically cause DRUH-PLGR communications to resume if DRUH is on.

If the PLGR antenna has a clear view of the sky, turn PLGR on.

If the antenna's view of the sky is blocked (e.g. the vehicle is in a building, under tree cover or parked next to a large structure), move vehicle until the PLGR antenna is clear.

If the vehicle can not be moved, keep PLGR turned off until the vehicle can be moved to a location with a clear view of the sky.

**NOTE**

- If the PLGR is off, the Navigation System will still accept initialization data from the AFCS for inertial operation and the Navigation System will operate as before.
- Guidelines for conditions and times for the PLGR to obtain position data acceptable by the AFCS.

c. If the antenna has a clear view of the sky and PLGR has a valid position, current GPS time, current GUV key, and has stored a current satellite almanac, PLGR will be acceptable for use in about 3 minutes following the first turn-on of the day. It will take about 90 seconds for subsequent turn-ons. These are the normal operating conditions.

d. If the antenna has a clear view of the sky and PLGR has a current GUV key but PLGR doesn't have a valid position, current GPS time, or current satellite almanac, it may take up to 20 minutes after turn-on for the PLGR to output data of acceptable accuracy.

## 2-12 AFCS INITIALIZATION - CONTINUED

### 2-12.1 System Power-Up - Continued

e. If the PLGR has a valid position, current GPS time, current key, and current satellite almanac, but the antenna is masked from a clear view of the sky when PLGR is turned on, it may take up to 20 minutes to get acceptable data after the vehicle is moved to a location with a clear view of the sky. This results from the PLGR initiating a search for all possible satellites if it can't lock on to those expected, for its current position, time, and almanac, within a reasonable time interval.

f. If the PLGR doesn't have a current key, its data won't be acceptable for use by the AFCS. However, assuming a clear view of the sky, it can be turned on to initialize position, time, and satellite almanac in about 20 minutes. Then when a valid key is located, the PLGR will be ready to go within three minutes.

**NOTE**

M93 MVS must be installed and connected prior to turning the vehicle MASTER power switch ON.

Make sure TRAINING switch on DU is OFF. Set POWER switch on DU to ON. When power is first applied to the AFCS, the display will be blank and the AFCS will automatically perform its internal self-test (BIT). Next a screen will be displayed with this message "AFCS OPERATING SYSTEM BOOT UP . . . PLEASE WAIT" . . ., followed by an "INITIALIZATION IN PROGRESS. . . " screen.

**NOTE**

- The time lapse between first three screens can range from 3 to 5 minutes.
- If screen stays blank for more than 7 minutes, power down system.

A SYSTEM VERIFICATION FAILURE screen may be displayed only if there is an incompatibility between hardware and software.

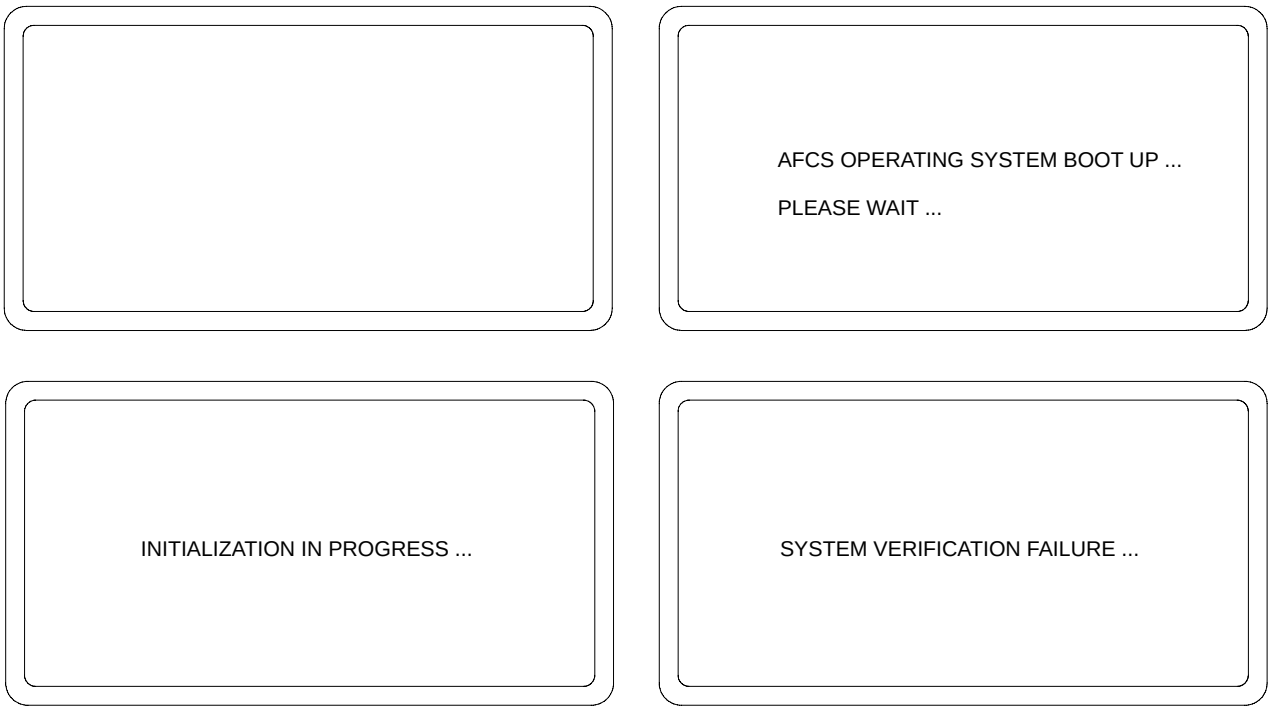


06pc414ma

## 2-12 AFCS INITIALIZATION - CONTINUED

### 2-12.1 System Power-Up - Continued

After the AFCS powers up, the PLGR screen should read:

REMOTE CONTROL
Only ZEROIZE key
activated

At this point the PLGR key pad will become inactive. The only PLGR operation allowed using the key is EMERGENCY ZEROIZE.

If this message is not displayed on the PLGR screen, and the Low Priority Message “GPS OUT - PLGR DISCONNECTED” is not displayed on the DU, ensure that the DRUH-PLGR Signal Connector (P4) plug on the W17A Cable is connected and secure. Once this PLGR screen is displayed, proceed with system initialization.

**NOTE**

- NAV SUBSYSTEM includes: VMS, DRUH, VMS Modems
- PCU SUBSYSTEM includes: PCU and both Back-up Batteries.
- The switches on the PCU are circuit breakers. They should be left ON at all times, so they will not wear out from being turned off and on constantly.

This screen displays the subsystems that are checked by BIT. As the subsystems are checked, the dashed lines will change to a subsystem status (OK, DEGRADED, OUT, - - ). The - - appears on the MVS status line when the AFCS could not be connected to the MVS. This screen also identifies the system software version.

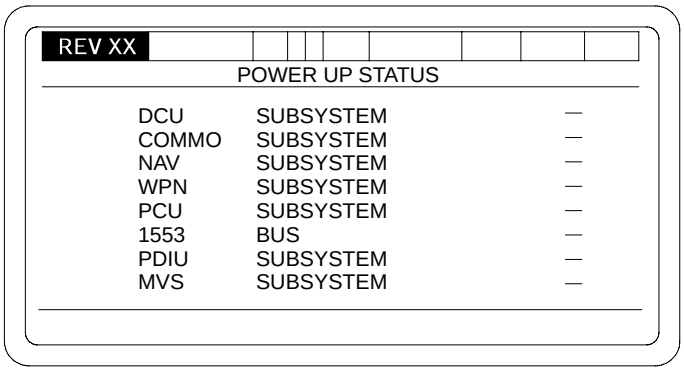


06pc071m

## 2-12 AFCS INITIALIZATION - CONTINUED

### 2-12.1 System Power-Up - Continued

In the event of a failure during POWER UP STATUS, the message “DEGRADED - ACK TO CONTINUE” will be displayed on the bottom line of the EL Panel. To continue, depress soft key under ACK. After the self-test is complete, SELECT OPERATIONAL MODE menu is displayed.

**NOTE**

If all systems are OK, the screen below will not be shown.

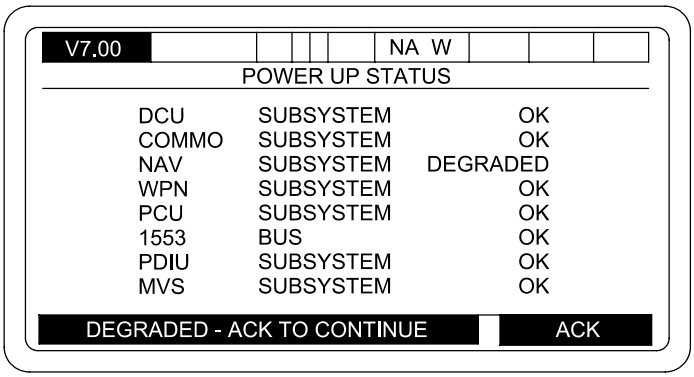


06pc072m

**NOTE**

If DCU contains an incorrect configuration, the AFCS will not allow the operator to select normal operations until a correct DCU software configuration is downloaded.

When configuration verification checking indicates that the executed software configuration is not the same as the acquired software configuration, a short error message “INVALID SOFTWARE CONFIGURATION”, “ACK” will appear on the soft key label line of the DU.

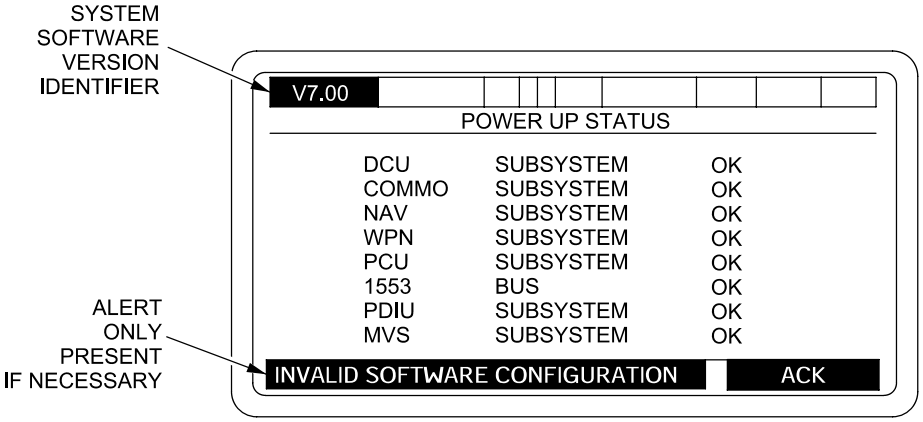


06pc073m

## 2-12 AFCS INITIALIZATION - CONTINUED

### 2-12.2 Initializing.

When a Fire Control Alignment is required by the AFCS, the alert “FIRE CONTROL ALIGN” “REQ”, “ACK” will appear on the soft key label line of the DU. This alignment must be accomplished before INITIALIZATION of the AFCS can be completed. If a full Fire Control Alignment including SYSTEM RESTART or Power Cycle is not completed when it is requested, the DU FAULT lamps and ACU BIT lamp will illuminate and remain lit.

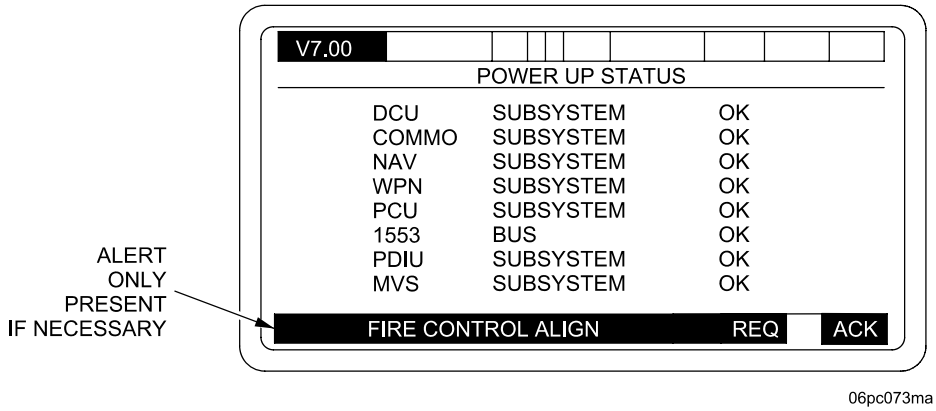


When the message is acknowledged, the AFCS will proceed to the “SELECT OPERATIONAL MODE” menu. To view detailed software configuration information for each LRU, MAINTENANCE should be selected, IAW procedure in para 3-5.1.

**NOTE**

After an orderly shutdown, go to para 2-12.3. However, if a catastrophic failure happens within the system, follow the procedures below.

When initializing the AFCS, communications parameters (NET ACCESS and NET ADDRESS) are entered to establish digital communications. Data to align the navigation system to a known location must also be entered at initialization. Other data to establish date/time, ammunition supply and propellant temperature, TOT response time, load elevation, and sector of fire must be entered before the initialization process is complete. All this data is input during NORMAL OPERATIONS Mode which is selected from the SELECT OPERATIONAL MODE menu.

**NOTE**

It is possible that an ALERT(S) may appear on the bottom line of the SELECT OPERATIONAL MODE screen. To continue, press the “ACK” soft key.

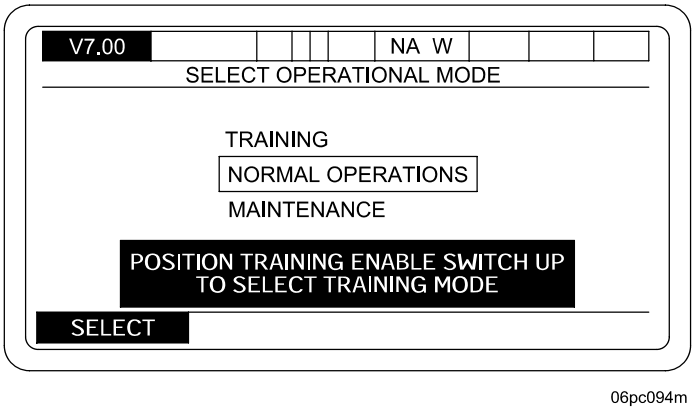

## 2-12 AFCS INITIALIZATION - CONTINUED

### 2-12.2 Initializing - Continued

a. Mode Selection. Set TRAINING ON/OFF switch to OFF when selection other than TRAINING is required. Box in NORMAL OPERATIONS mode. Press SELECT key. NET ACCESS menu will be displayed.

**NET ACCESS menu can also be entered from the SETUP AND INFORMATION menu.**

b. Net Access. Using the NET ACCESS menu, check that data in the displayed menu shows same data that the unit SOP specifies.

**NOTE**

To ensure efficient set up of the digital net, it is very important that NET ACCESS and NET ADDRESS data be assigned and controlled by POC/BCS. Verify data per local SOP.

When NETWORK PROTOCOL is AFCS the menu below will be displayed.

(1) NET TYPE - To select the correct NET TYPE for NETWORK PROTOCOL see Table 2-2 for AFCS NETWORK PROTOCOL entries 1 to 21, and Table 2-3 for 188-220A PROTOCOL entries 22 to 52.

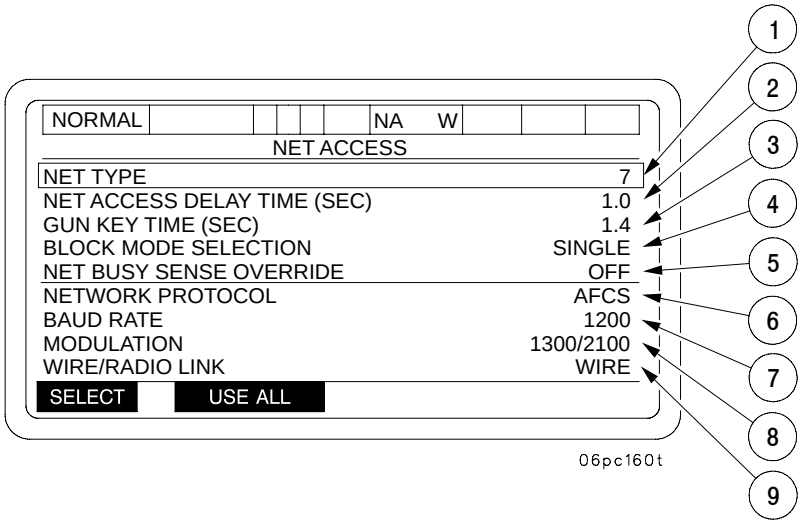


When NETWORK PROTOCOL is AFCS the menu below will be displayed.

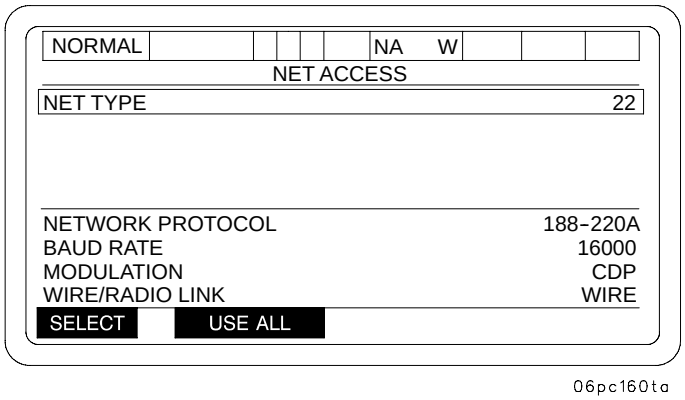


When NETWORK PROTOCOL is 188-220A NET ADDRESS menu will be displayed.

## 2-12 AFCS INITIALIZATION - CONTINUED

### 2-12.2 Initializing - Continued

Entries for the NET ACCESS menu are listed below.

1. ENTER NET TYPE. NUMERIC FIELD, RANGE 1. . 52 (DEFINED IN TABLES 2-2 AND 2-3 (SEE (b) BELOW)
2. NUMERIC FIELD, RANGE .5 TO 49.5 SECONDS (SEE (a) BELOW)
3. WHEN SELECTED GUN KEY TIME MENU WILL BE DISPLAYED
4. (SINGLE, DOUBLE) ENTRY
5. (OFF, ON) ENTRY
6. AFCS OR 188-220A BASED ON NET TYPE. NOT SELECTABLE (SEE NOTE (c and d) BELOW)
7. (300, 600, 1200, 2400, 4800, 8000, 16000, 32000) BASED ON NET TYPE. NOT SELECTABLE
8. (NRZ, CDP, 1200/2400, 1300/2100, 1575/2425) BASED ON NET TYPE. NOT SELECTABLE
9. (WIRE RADIO, RADIO/KY-57) BASED ON NET TYPE. NOT SELECTABLE
   WHEN NET TYPE OR NET ACCESS DELAY TIME IS SELECTED (SEE (a and b) BELOW)

USE ALL

- The NET ADDRESS (AFCS) menu will be displayed if NETWORK PROTOCOL is AFCS
- The NET ADDRESS (188.220A) menu will be displayed if NETWORK PROTOCOL is 188-220A

a. When NET ACCESS DELAY TIME (SEC) SELECTED WIRE RADIO LINK LINE, line is overwritten with, “TYPE TIME: .5 TO 49.5 SEC” - PRESS ENT -

b. When NET TYPE SELECTED WIRE RADIO LINK LINE is overwritten with, “TYPE NET TYPE: Entries from Tables 2-2 and 2-3” - PRESS ENT -

## 2-12 AFCS INITIALIZATION - CONTINUED

### 2-12.2 Initializing - Continued

**TABLE 2-2 NET TYPE Table (AFCS PROTOCOL)**

| | PROTOCOL | Device | Modulation | Baud Rate |
|---|---|---|---|---|
| 1 | AFCS | Wire | CDP | 8,000 |
| 2 | AFCS | Wire | CDP | 16,000 |
| 3 | AFCS | Wire | CDP | 32,000 |
| 4 | AFCS | Wire | 1200/2400 | 600 |
| 5 | AFCS | Wire | 1200/2400 | 1,200 |
| 6 | AFCS | Wire | 1300/2100 | 600 |
| 7 | AFCS | Wire | 1300/2100 | 1,200 |
| 8 | AFCS | Radio | NRZ | 600 |
| 9 | AFCS | Radio | NRZ | 1,200 |
| 10 | AFCS | Radio | NRZ | 2,400 |
| 11 | AFCS | Radio | NRZ | 4,800 |
| 12 | AFCS | Radio | NRZ | 16,000 |
| 13 | AFCS | Radio | 1200/2400 | 600 |
| 14 | AFCS | Radio | 1200/2400 | 1,200 |
| 15 | AFCS | Radio | 1300/2100 | 600 |
| 16 | AFCS | Radio | 1300/2100 | 1,200 |
| 17 | AFCS | Radio/KY-57 | NRZ | 16,000 |
| 18 | AFCS | Radio/KY-57 | 1200/2400 | 600 |
| 19 | AFCS | Radio/KY-57 | 1200/2400 | 1,200 |
| 20 | AFCS | Radio/KY-57 | 1300/2100 | 600 |
| 21 | AFCS | Radio/KY-57 | 1300/2100 | 1,200 |

## 2-12 AFCS INITIALIZATION - CONTINUED

### 2-12.2 Initializing - Continued

**TABLE 2-3 NET TYPE Table (188-220A)**

| | PROTOCOL | Device | Modulation | Baud Rate |
|---|---|---|---|---|
| 22 | 188-220A | Wire | CDP | 16,000 |
| 23 | 188-220A | Wire | CDP | 32,000 |
| 24 | 188-220A | Wire | 1300/2100 | 300 |
| 25 | 188-220A | Wire | 1300/2100 | 600 |
| 26 | 188-220A | Wire | 1300/2100 | 1,200 |
| 27 | 188-220A | Wire | 1575/2425 | 300 |
| 28 | 188-220A | Wire | 1575/2425 | 600 |
| 29 | 188-220A | Wire | 1575/2425 | 1,200 |
| 30 | 188-220A | Radio | NRZ | 600 |
| 31 | 188-220A | Radio | NRZ | 1,200 |
| 32 | 188-220A | Radio | NRZ | 2,400 |
| 33 | 188-220A | Radio | NRZ | 4,800 |
| 34 | 188-220A | Radio | NRZ | 16,000 |
| 35 | 188-220A | Radio | 1300/2100 | 300 |
| 36 | 188-220A | Radio | 1300/2100 | 600 |
| 37 | 188-220A | Radio | 1300/2100 | 1,200 |
| 38 | 188-220A | Radio | 1575/2425 | 300 |
| 39 | 188-220A | Radio | 1575/2425 | 600 |
| 40 | 188-220A | Radio | 1575/2425 | 1,200 |
| 41 | 188-220A | Radio/KY-57 | NRZ | 300 |
| 42 | 188-220A | Radio/KY-57 | NRZ | 600 |
| 43 | 188-220A | Radio/KY-57 | NRZ | 1,200 |
| 44 | 188-220A | Radio/KY-57 | NRZ | 2,400 |
| 45 | 188-220A | Radio/KY-57 | NRZ | 4,800 |
| 46 | 188-220A | Radio/KY-57 | NRZ | 16,000 |
| 47 | 188-220A | Radio/KY-57 | 1300/2100 | 300 |
| 48 | 188-220A | Radio/KY-57 | 1300/2100 | 600 |
| 49 | 188-220A | Radio/KY-57 | 1300/2100 | 1,200 |
| 50 | 188-220A | Radio/KY-57 | 1575/2425 | 300 |
| 51 | 188-220A | Radio/KY-57 | 1575/2425 | 600 |
| 52 | 188-220A | Radio/KY-57 | 1575/2425 | 1,200 |

# 2-12 AFCS INITIALIZATION - CONTINUED

## 2-12.2 Initializing - Continued

(2) NET ACCESS DELAY TIME - Used to select proper transmission delay time to maintain network access precedence order assigned to various subscribers. To enter a new NET ACCESS DELAY TIME, box in new time. Press SELECT key. Menu will request time entry. Enter new time per SOP. Allowable entries are 0.5 to 49.5 seconds in 0.5 second intervals.

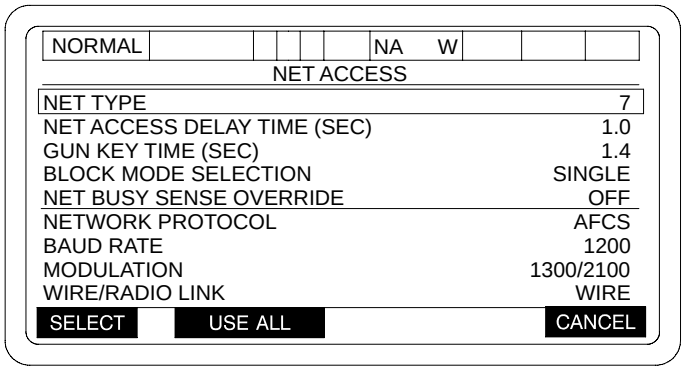


06pc161t

USE ALL = Will display TACFIRE/FSK menu

CANCEL = Return to SETUP AND INFORMATION menu

(3) GUN KEY TIME - Used for selecting assigned transmit delay time. This stabilizes the communications link and allows the radio to reach full transmit power before the digital data message is sent. When GUN KEY TIME is selected from the NET ACCESS menu, a NET ACCESS-GUN KEY TIME menu will be displayed. Box in proper time. Press SELECT key. This will enter data into AFCS and return to NET ACCESS menu (new GUN KEY TIME will be shown).

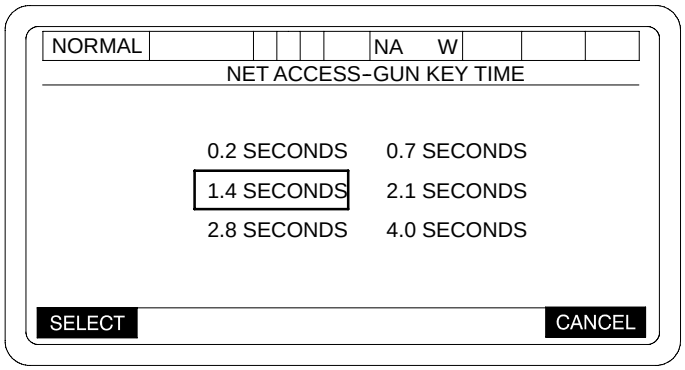


06pc096m

## 2-12 AFCS INITIALIZATION - CONTINUED

### 2-12.2 Initializing - Continued

(4) BLOCK MODE SELECTION - Used for selection of single-block or double-block mode transmission of each data block. The double-block transmission provides for each data block to be transmitted twice. When BLOCK MODE SELECTION is selected, the NET ACCESS menu will appear with present block mode boxed in. After proper selection is made, the entire NET ACCESS display will be shown. New data will be shown in proper field. (Other data will remain unchanged.) Double-block mode will be used when requested by Platoon Operations Center (POC).

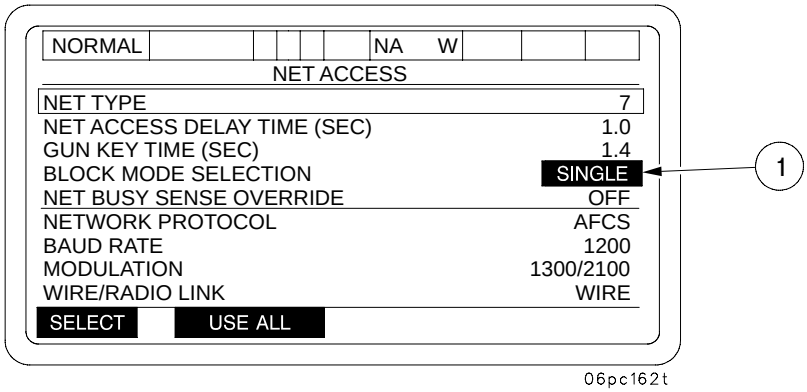


1 Enter (SINGLE, DOUBLE)

(5) NET BUSY SENSE OVERRIDE - Meant to be used to force a message through when communication net is degraded or jammed (message traffic or noise is sensed by communications processor). Selecting Net Busy Sense Override (ON) when other subscribers are transmitting can cause message errors in radio traffic, and denies other subscribers net access. Consult unit SOP for proper use of NET BUSY SENSE OVERRIDE. Box in NET BUSY SENSE OVERRIDE and press SELECT key. A NET ACCESS menu will be displayed showing present status boxed in. After proper selection, YES or NO, is made, new data will be in proper field on EL Panel. (Other data will remain unchanged.)

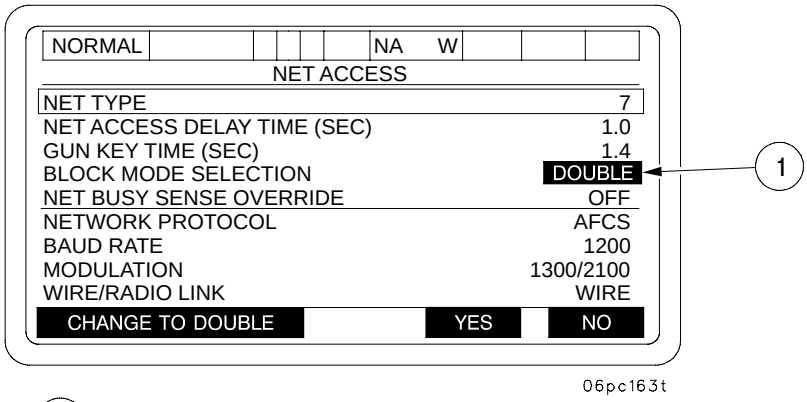


1 Enter (SINGLE, DOUBLE)

**NOTE**

ENTERING NET ACCESS TO SYSTEM - To enter this data in the AFCS, check that all data has been corrected or changed as required per local SOP. Press USE ALL key. Data is now in AFCS system and NET ACCESS has been initialized. NET ADDRESS menu will be displayed.

## 2-12 AFCS INITIALIZATION - CONTINUED

### 2-12.2 Initializing - Continued

# DELETED

## 2-12 AFCS INITIALIZATION - CONTINUED

### 2-12.2 Initializing - Continued

c. Net Address. NET ADDRESS is used to name radio subscribers and must be initialized. The NET ADDRESS menu will appear on the EL Panel after data for NET ACCESS is stored. If all data displayed is correct according to the unit SOP, press USE ALL key to initialize the NET ADDRESS. If data must be updated or changed, proceed as follows.

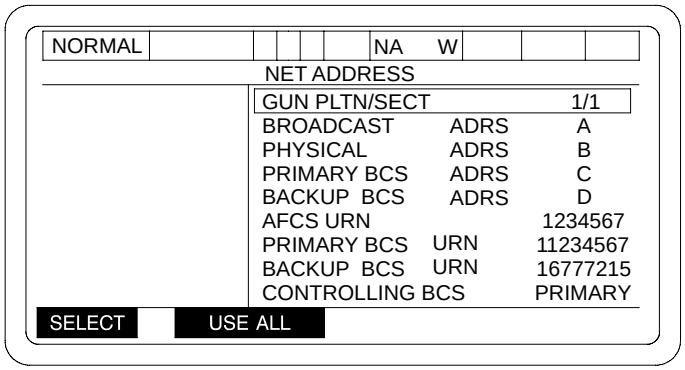


06pc165t

(1) GUN PLTN/SECT - Selection of GUN PLTN/SEC from the NET ADDRESS menu will bring up a NET ADDRESS menu with Gun Platoon/Section choices displayed. Present GUN PLTN/SECT will be highlighted. Change selection by boxing in individual GUN PLTN/SECT. Press SELECT key to enter new GUN PLTN/ SECT into the AFCS.

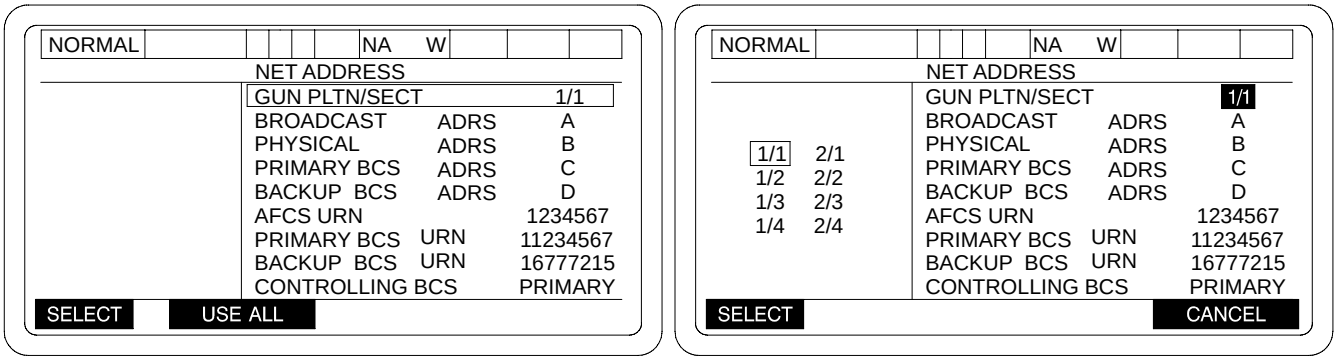


06pc166t

## 2-12 AFCS INITIALIZATION - CONTINUED

### 2-12.2 Initializing - Continued

(2) BROADCAST ADDRESS - Selecting BROADCAST ADRS on NET ADDRESS menu will display the NET ADDRESS menu. The present status of the Broadcast Address will be highlighted and a table of addresses will appear on the left side of menu. Selecting letters from table on left side of display will delete them. Selected letters will now appear on right side of display. This will prevent selecting the same letter twice, which would cause communication errors. A letter is selected by boxing in selection and pressing SELECT key.

(3) PHYSICAL ADRS- Address used for Special Missions i.e. (Sensor to Shooter) - These fields are initialized in the same manner as the BROADCAST ADRS.

(4) PRIMARY BCS ADRS, and BACKUP BCS ADRS - These fields are initialized in the same manner as the BROADCAST ADRS.

**NOTE**

The backup BCS Address will only be displayed if the primary BCS provided an address in the subscriber file message.

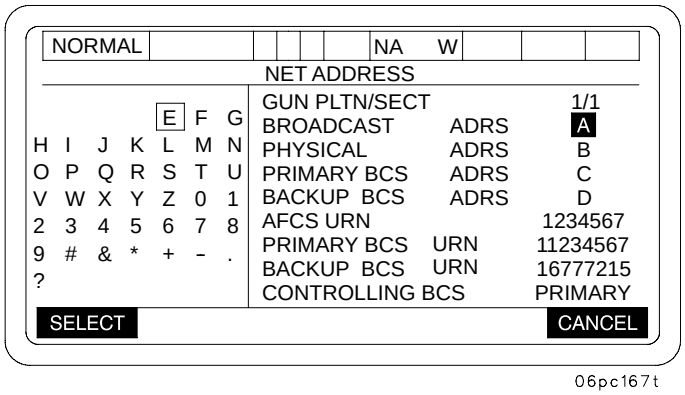


06pc167t

## 2-12 AFCS INITIALIZATION - CONTINUED

### 2-12.2 Initializing - Continued

(5) AFCS URN, PRIMARY BCS URN and BACKUP BCS URN - These fields are initialized by entering the same data from the communication parameter card. If any URN value is duplicated a "WARNING" will be displayed.

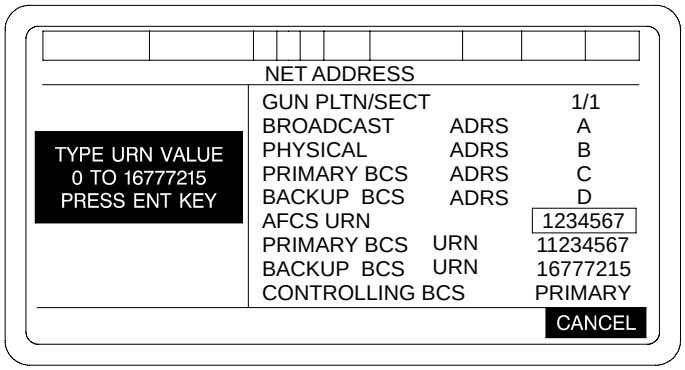


06pc168t

(6) CONTROLLING BCS - When this is boxed in and the SELECT key is pressed, the menu will ask if the controlling BCS is to be either backup or primary. By pressing the YES key, the controlling BCS will be assigned the opposite of shown state.

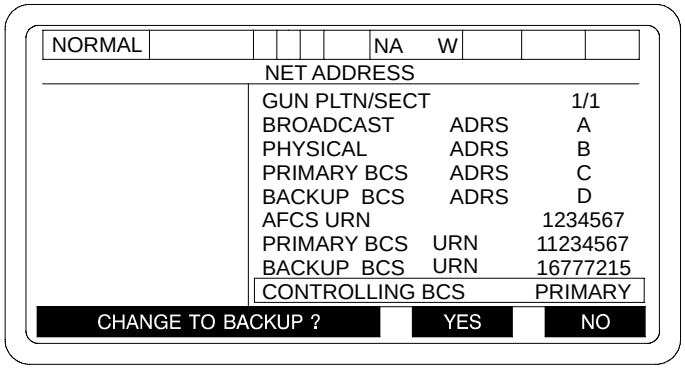


06pc169t

**NOTE**

Controlling BCS will not be selectable if no backup BCS address is sent by the POC.

# 2-12 AFCS INITIALIZATION - CONTINUED

## 2-12.2 Initializing - Continued

(7) Net Address. NET ADDRESS for 188-220A NETWORK PROTOCOL is used to name subscribers. The NET ADDRESS menu will appear on the EL Panel after data for NET ACCESS is stored. If all data displayed is correct according to the unit SOP, press USE ALL key to initialize the NET ADDRESS. If data must be updated or changed, proceed as follows:

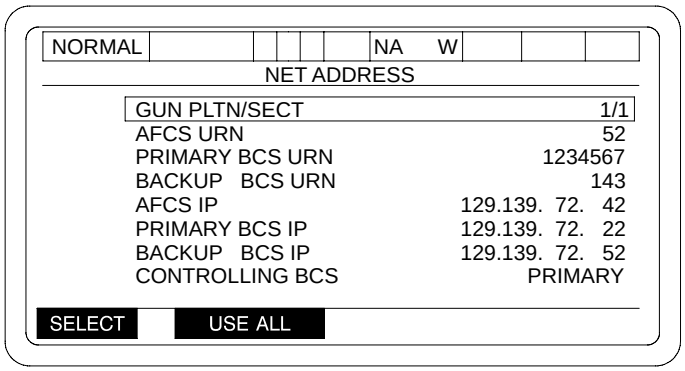


06pc170t

(8) GUN PLTN/SECT - Selection of GUN PLTN/SEC from the NET ADDRESS menu will bring up a NET ADDRESS menu with Gun Platoon/Section choices displayed. Change selection by boxing in individual GUN PLTN/SECT. Press SELECT key to enter new GUN PLTN/SECT into the AFCS.

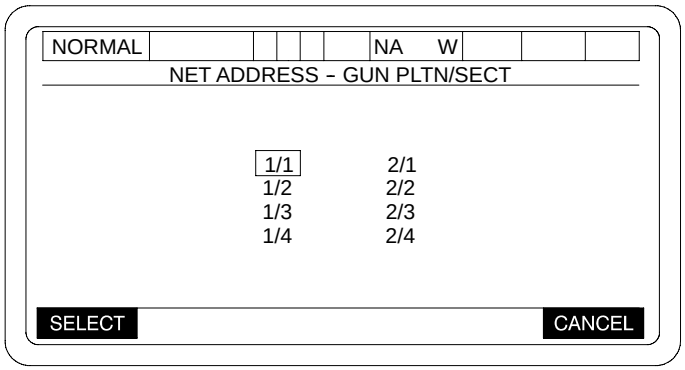


06pc171t

## 2-12 AFCS INITIALIZATION - CONTINUED

### 2-12.2 Initializing - Continued

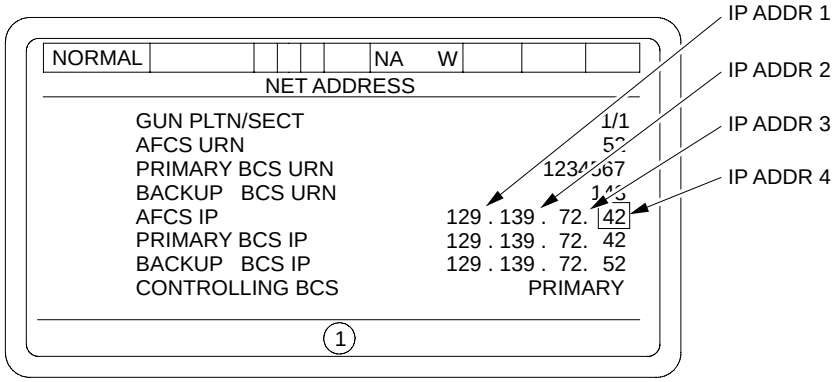


1 DUPLICATE IP ADDRESS ACK

Appears if any IP address is duplicated.

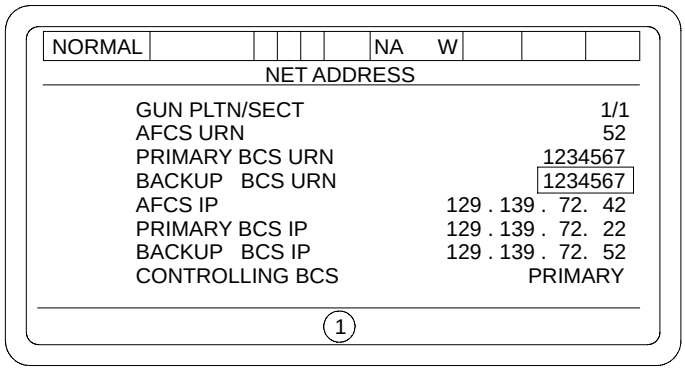


1 DUPLICATE URN ACK

Appears if any URN address is duplicated.

06pc172ta

AFCS URN, PRIMARY BCS URN and BACKUP BCS URN - These fields are initialized in the same manner. If any URN value is duplicated a “WARNING” will be displayed.

(1) AFCS IP ADDRESS - Can be up to 11 digits in four Groups. Once all data has been entered press the FINISHED key.

(2) PRIMARY BCS IP and BACKUP BCS IP ADDRESS will be changed to match the first and second Group entered in the AFCS IP ADDRESS.

(3) Third and fourth digits can be entered in the same manner as entered in the AFCS IP ADDRESS.

## 2-12 AFCS INITIALIZATION - CONTINUED

### 2-12.2 Initializing - Continued

(9) CONTROLLING BCS - When this is boxed in and the SELECT key is pressed, the menu will ask if the controlling BCS is to be either backup or primary. By pressing the YES key, the controlling BCS will be assigned the opposite of shown state.

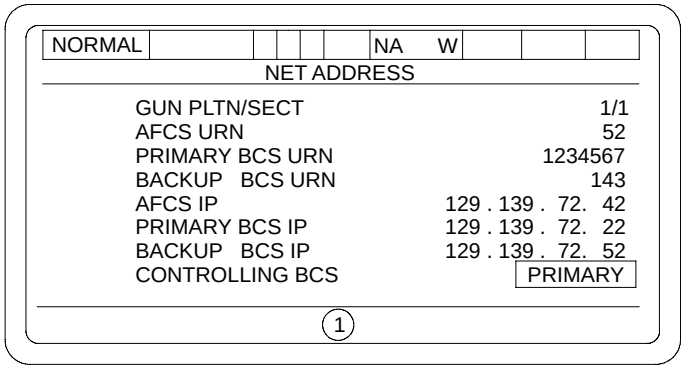


06pc174t

(1) Appears if AFCS IP Address has been changed 27 times WITHOUT REBOOTING.

Commo will FAIL and raise the following TWO alerts.

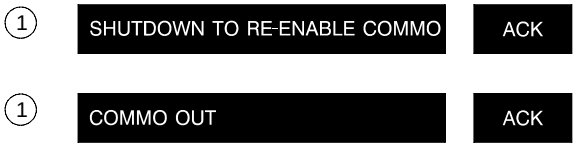


06pc175t

Each alert must be acknowledged.

To RE-ENABLE COMMO, AFCS ACU must be POWERED DOWN and then POWERED UP.

**NOTE**

ENTERING NET ADDRESS TO SYSTEM - To enter this data in the AFCS, check that all data has been corrected or changed as required per local SOP. Press USE ALL key. Data is now in AFCS system and NET ADDRESS has been initialized. The SETUP AND INFORMATION menu will be displayed.

## 2-12 AFCS INITIALIZATION - CONTINUED

### 2-12.2 Initializing - Continued

d. Other Initialization Steps. When NET ACCESS and NET ADDRESS have both been initialized, a SETUP AND INFORMATION menu will be displayed. There are two pages to this menu. By pressing NEXT PAGE key, second page will be displayed.

**NOTE**

- Items marked with an * must be entered to complete initialization process. Without these data entries, the system will not be completely initialized and the AFCS will not be able to receive a mission.
- The NAV UPDATE selection will be blank when a command has been sent to the navigation subsystem and has not yet been completed.
- When in a degraded mode, some items may not appear.

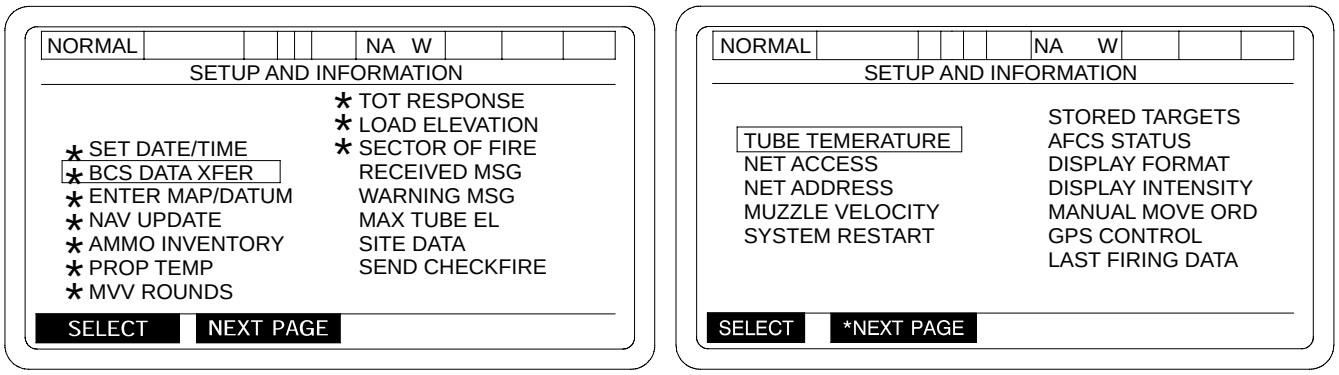


06pc176t

## 2-12 AFCS INITIALIZATION - CONTINUED

### 2-12.2 Initializing - Continued

Steps of other initialization data entry are done as follows:

(1) SET DATE/TIME Group - This data is required for proper communications and is used for TOT data and other time related tasks and missions. From SETUP AND INFORMATION menu, box in SET DATE/TIME. Press SELECT key. This will cause a SET DATE/TIME Group menu to be displayed. If GPS data is available select "USE GPS". Note, GPS Time is ZULU (Greenwich Mean Time) when "USE GPS" selected, all times will be aligned to ZULU (Local ZULU and GPS). If GPS data is not available or if POC has instructed you not to use GPS proceed as follows:

(a) Enter two digits each for Year, Month, Date, Hour and Minute into boxed-in area.

(b) If a mistake is made prior to typing in all ten digits, press CLR key and try again. If all ten digits have been typed in, then menu will automatically show a SET DATE/TIME GROUP display with prompt.

(c) If incorrect data has been typed in after all 10 digits have been entered, press CANCEL key. This will return display to SET DATE/TIME menu. Then proceed with reentering correct data for Date/Time Group.

(d) To ensure proper time synchronization between the AFCS and POC/BCS, a countdown to MARK should be controlled by the POC. If data is correct when MARK is announced by POC, press MARK key to start the clock. This will return the display to the SETUP AND INFORMATION menu.

(e) Date/Time setting on system - Defaults to system clock if no other input is entered in. BCS and the AFCS messages will be rejected if more than 60 minutes difference between BCS time and AFCS time has elapsed. Unit SOP needs to be in real Date/Time.

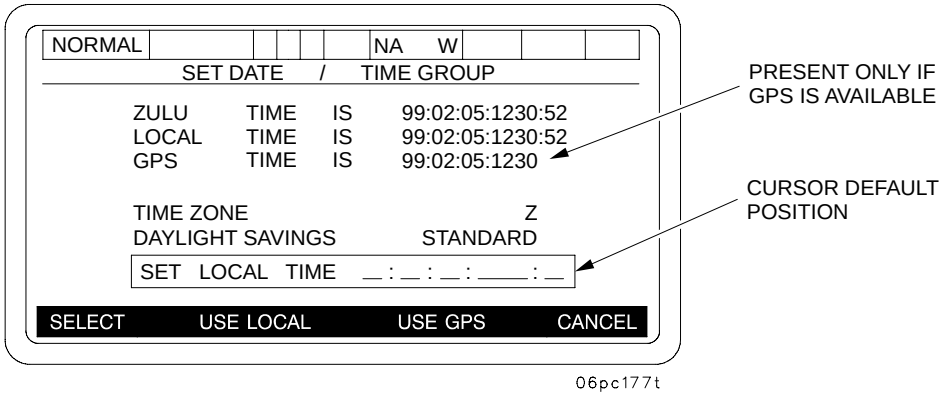


**NOTE**

Upon entering the Current DTG, Current Zulu, and Current GPS time, if available, shall be displayed to the operator. Operator must enter Time Zone, Daylight Savings and NEW DTG. The first time the AFCS-XXI program is executed the Zulu and Local time will be calculated from the hardware clock.

# 2-12 AFCS INITIALIZATION - CONTINUED

## 2-12.2 Initializing - Continued

SELECT TIME ZONE - ENTER SELECT TIME ZONE IN ACCORDANCE WITH UNIT SOP.

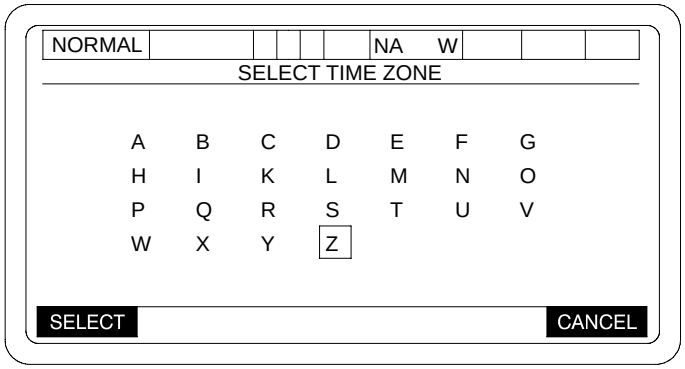


06pc178t

SELECT DAYLIGHT SAVINGS - ENTER SELECT DAYLIGHT SAVINGS TIME IN ACCORDANCE WITH UNIT SOP.

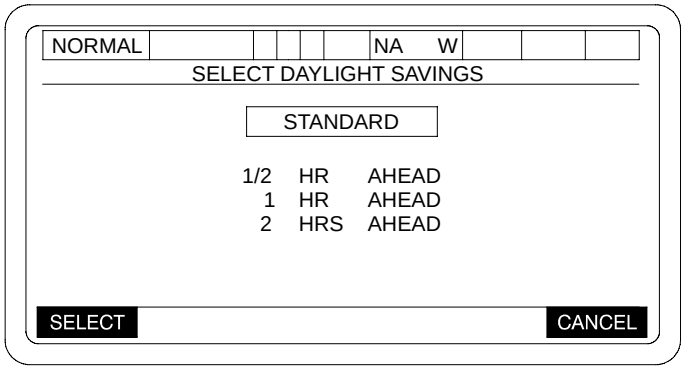


06pc179t

# 2-12 AFCS INITIALIZATION - CONTINUED

## 2-12.2 Initializing - Continued

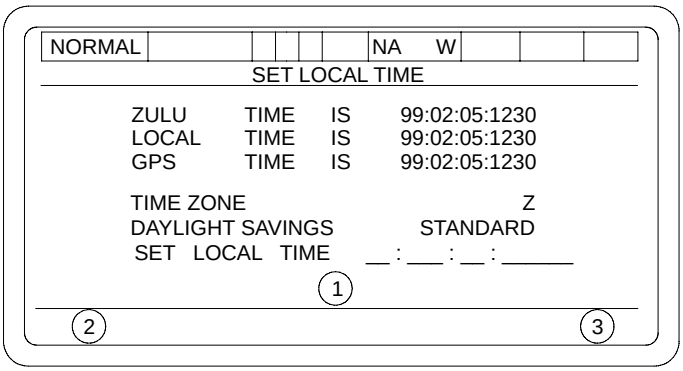


06pc180t

Notes:

1

TYPE IN NEW DTG - YY:MM:HHMM = Shall appear below the SET LOCAL TIME row upon entry to display above menu. Operator must enter date in format displayed (YY:MM:DD:HHMM). Operator may press CLEAR any time to reset entry.

PRESS MARK TO SET LOCAL TIME = Shall appear below the SET LOCAL TIME row upon entry of the last digit of the minute.

2

MARK = The MARK key shall be displayed upon entry of the last digit of the minute. When the MARK key is pressed the Local Time shall be processed and returned to the SETUP AND INFORMATION menu.

INVALID DTG VALUE ACK = If an invalid DGT is entered, this error shall be displayed to the operator. Press “ACK” and re-enter the date and time.

3

CANCEL = When PRESS MARK TO SET LOCAL TIME is displayed and the CANCEL key is pressed the SET LOCAL TIME entries shall be cleared and the operator shall be able to enter a new LOCAL TIME.

= When the CANCEL key is pressed under all other conditions to display the SETUP AND INFORMATION menu will be displayed.

Date/Time setting on System - Defaults to system clock if no other Input is recorded in BCS and AFCS. Messages will reject if more than 60 minutes has elapsed. Unit SOP needs to be in real Date/Time.

## 2-12 AFCS INITIALIZATION - CONTINUED

### 2-12.2 Initializing - Continued

**NOTE**

The BCS data transfer must be done each time you initialize the AFCS, if the FDC/BCS is operational.

(2) BCS DATA XFER - To get initialization data from the POC/BCS, box in BCS DATA XFER and then press SELECT key. This will cause a BCS DATA XFER menu to be displayed with INITIALIZATION already boxed and Operator Alert. Pressing YES key will send a request to POC/BCS for needed data. Data includes: Subscriber File Message, Map Modification Input Message, Computer Meteorological Message, and Registration Data Input Message. This ensures that operator can properly communicate with other subscribers and can compute fire mission accurately. If NO ACK REQ INIT is displayed, contact POC to ensure that proper initialization has taken place. Repeat procedure if required. When initialization is complete, press CANCEL key.

If BCS DATA XFER does not have an *, then pressing the SELECT key will cause a BCS DATA XFER menu to be displayed without INITIALIZATION boxed. Box in INITIALIZATION and press SELECT key to provide the Operator Alert. Pressing YES sends the request to POC/BCS as described above.

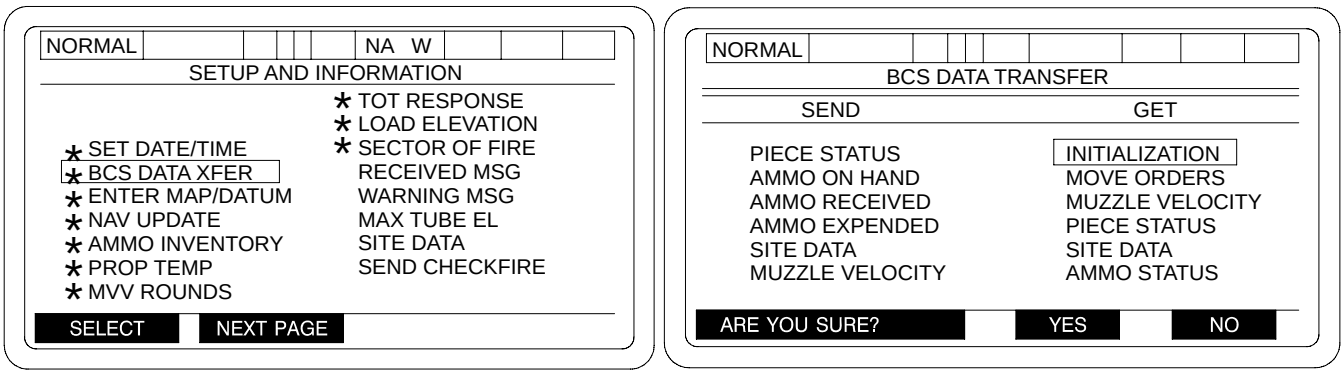


06pc415ma

## 2-12 AFCS INITIALIZATION - CONTINUED

### 2-12.2 Initializing - Continued

(3) ENTER MAP and DATUM -The BCS DATA XFER, INITIALIZATION data includes a MAP MOD and SPHEROID,and map DATUM.

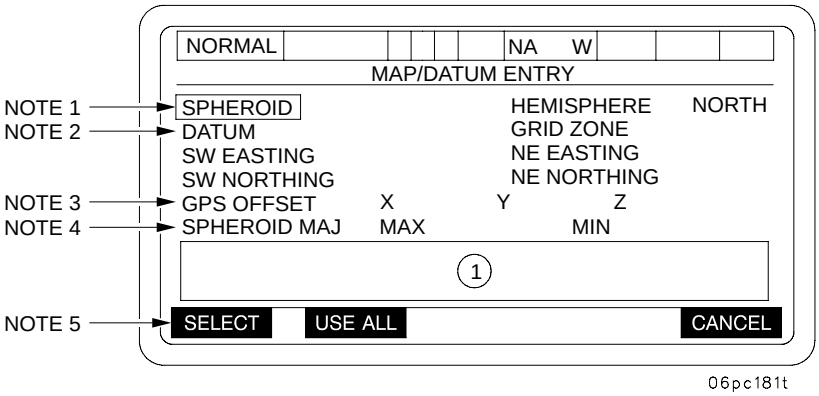


Check to see if all the data is correct. If it is correct, press the USE ALL key, and proceed with the initialization. If an entry is not correct, select that field and make corrections.

NOTE 1 SELECTION OF THIS FIELD WILL DISPLAY SELECT SPHEROID MENU.

NOTE 2 SELECTION OF THIS FIELD WILL DISPLAY SELECT DATUM MENU.

NOTE 3 FIELD IS ONLY PRESENT IF USER DEFINED (USRDEF) DATUM IS USED. NOT MODIFIABLE.

NOTE 4 FIELD IS ONLY PRESENT IF USER DEFINED (USRDEF) SPHEROID IS USED. NOT MODIFIABLE.

NOTE 5 HEMISPHERE FIELD SELECTED THE FOLLOWING WILL BE DISPLAYED.

CHANGE HEMISPHERE? YES NO

WHEN ANY OTHER FIELD IS SELECTED THE FOLLOWING WILL BE DISPLAYED.

CANCEL

(1) OPERATOR PROMPT AREA FOR LEGAL VALUES

## 2-12 AFCS INITIALIZATION - CONTINUED

### 2-12.2 Initializing - Continued

Listed below are the legal values for each field of the MAP/DATUM entry Display:

When SPHEROID is selected:

SPHEROID selected will define DATUMs available.
Type 1 . . 9 or A . . I and USRDEF
Press ENT key

When SW EASTING is selected:

EASTING value of SW Corner Of Howitzer Operational Area.
Type 0 to 999999:
Press ENT key.

When SW NORTHING is selected:

NORTHING value of SW Corner of Howitzer Operational Area.
Type 0 to 11000000:
Press ENT key.

When HEMISPHERE is selected:

Select NORTH for above the Equator, SOUTH for below.
CHANGE HEMISPHERE YES NO
Press YES or NO key.

When GRD ZONE is selected:

UTM GRID ZONE of Howitzer Operational Area.
Type 0 to 60:
Press ENT key.

When NE EASTING is selected:

EASTING value of NE Corner Of Howitzer Operational Area.
Type 1 to 999999:
Press ENT key.

When NE NORTHING is selected:

NORTHING value of NE Corner Of Howitzer Operational Area.
Type 0 to 11000000:
Press ENT key.

When GPS OFFSET is selected:

Type -2000.0 to + 2000.0:
Press ENT key.

## 2-12 AFCS INITIALIZATION - CONTINUED

### 2-12.2 Initializing - Continued

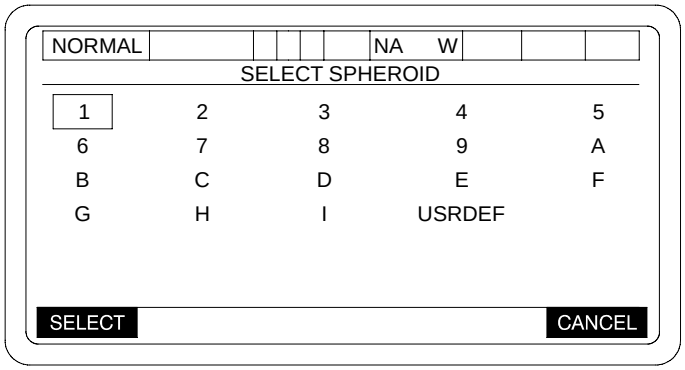


06pc182t

Enter the defined SPHEROID, PRESS the SELECT SOFT KEY and the SELECT DATUM menu will be displayed. Refer to Tables in Appendix J for SPHEROID listings.

SOFT KEY SEQUENCING SHALL BE AS FOLLOWS:

1. If USRDEF is boxed in and SELECTED then the ENTER USER DEFINED SPHEROID SEMI-MAJOR AXIS menu will be displayed.

2. If any other SPHEROID is SELECTED then the SELECT DATUM menu will be displayed to force SELECTION of the DATUM.

3. If CANCEL, then the MAP DATUM ENTRY menu will be displayed.

Maps are based upon a “reference datum.” This is really the model of the Earth that the cartographer uses when making a map. The reference datum consists of two parts, the spheroids and the datum offsets.

The Earth is really not a perfectly round globe but is a little “fatter” at the equator. Therefore, the mapmaker uses a spheroid rather than a globe to describe the Earth’s shape. Instead of just using one radius as one would do to describe a globe, two values are used. The first is the semi-major axis. It is the radius of the Earth at the equator. The second number is the semi-minor axis. It is the distance from the center of the Earth to the poles. It is slightly smaller than the semi-major axis. (The WGS 84 model of the Earth uses a semi-major axis of 6,378,137 meters and 6,356,752 meters for the semi-minor axis).

The cartographer may choose to base his model of the Earth’s surface using a center point that is different from the true center of the Earth. This offset of the center point is described by three “datum offset” values: delta X, delta Y and delta Z. These values are typically a few hundred meters.

There are many standard spheroid and datums commonly used for maps. If the mapmod is not supplied by a message from BCS, the AFCS operator will be told to select a certain spheroid and datum at the display unit. The starting point for entering this data is the MAP/DATUM ENTRY display.

The spheroid is selected using the SELECT SPHEROID sub-display. This display lists choices 1 to 9 and A to I. It is possible to use spheroid values different from the ones in the display lists. The different values are entered as “user defined.” This is selected by the USRDEF option listed as a choice for a spheroid. If the operator selects USRDEF, other sub-displays prompt him to enter the semi-major and semi-minor axes. These values must be obtained from the POC and should only be used with guidance from Battery Commander.

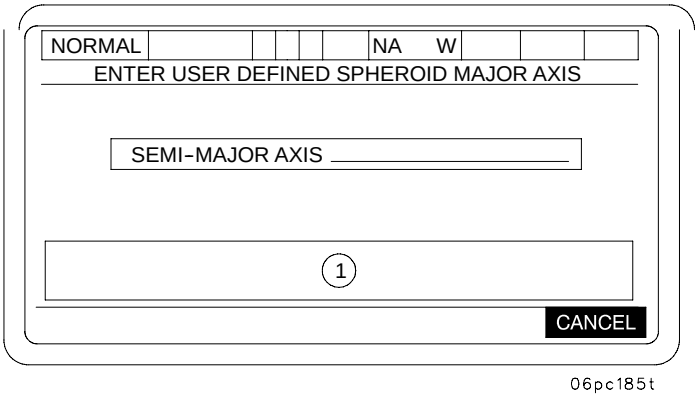


1 TYPE VALUE
BETWEEN 6376137.00 AND 6380137.00
-PRESS ENT KEY-

1. Any un-edited DATA fields remain at their current values when ENT key is pressed.

2. Soft key sequencing shall be as follows:

   If CANCEL, then the SELECT SPHEROID menu will be displayed.

   If ENTER, then ENTER USER DEFINED SPHEROID SEMI-MAJOR AXIS menu will be displayed.

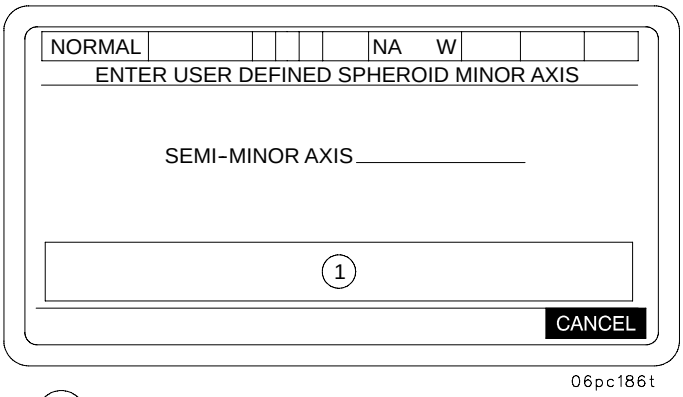


1 DISPLAYS ALLOWABLE RANGE FOR SEMI-MINOR AXIS.

1. Any un-edited DATA fields remain at their current values when ENT key is pressed.

2. Soft key sequencing shall be as follows:

   If CANCEL, then the ENTER USER DEFINED SPHEROID MAJOR AXIS menu will be displayed.

   If USE ALL, then the CONFIRM USER DEFINED SPHEROID AXIS menu will be displayed.

   If ENTER, then the CONFIRM USER DEFINED SPHEROID AXIS menu will be displayed.

# 2-12 AFCS INITIALIZATION - CONTINUED

## 2-12.2 Initializing - Continued

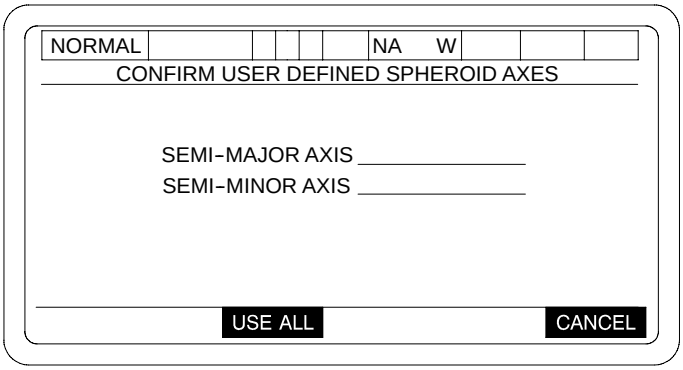


06pc187t

Soft key sequencing shall be as follows:

If CANCEL, then ENTER USER DEFINED SPHERIOD MINOR AXIS menu will be displayed.

If USE ALL, then the SELECT DATUM menu will be displayed.

After all the correct data has been entered, press the USE ALL key to clear * and return to the main menu.

The datum offset is selected using the SELECT DATUM sub-display. This display lists valid choices listed by an alphabetic code. It is possible to use datum offset values different from the ones in the display lists. The different values are entered as “user defined.” This is selected by the USRDEF option listed as a choice for a datum offset. The datum offset values are entered using the ENTER USER DATUM PARAMETERS sub-display. (For historical reasons, the offset values are listed as GPS OFFSET X, Y and Z.)

## 2-12 AFCS INITIALIZATION - CONTINUED

### 2-12.2 Initializing - Continued

There is a restriction on the use of user defined spheroid and datum. The operator cannot use a new user defined spheroid if current spheroid selection is user defined. Likewise, the operator cannot select a new user defined datum selection if the current datum selection is user defined. If the operator wants to go from a user defined datum to a new user defined datum, the operator should simply select any standard datum and then enter the new user defined. Likewise, if the operator wants to go from a user defined spheroid to a new user defined spheroid, the operator should simply select any standard spheroid and then enter the new user defined.

When DATUM is selected, SELECT DATUM menu is displayed:

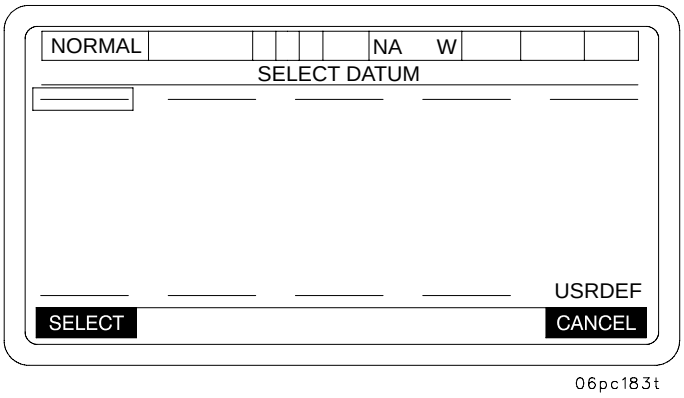


If CANCEL then the ENTER MAP/DATUM will be displayed

Box in the correct DATUM and press the SELECT key. The DATUMs available are dependent on the SPHEROID selected. See Appendix J.

**NOTE**

The reference frame for UTM position coordinates is a DATUM. Typically, a local DATUM is defined by an ellipsoidal Earth model (SPHEROID) and a starting point (origin) for the coordinate system. Coordinates on a map or in a Trig list (SCPs) often are on a Local DATUM. An example of a Local DATUM is the North American 1927 (NAD 27) DATUM used in the United States.

## 2-12 AFCS INITIALIZATION - CONTINUED

### 2-12.2 Initializing - Continued

There have been many different Local DATUMs developed. GPS computes position on the World Geodetic System 1984 (WGS 84), a worldwide coordinate system. To use GPS with coordinates on a Local DATUM, the coordinates must be mathematically shifted. The AFCS (DRUH and PLGR) can automatically perform DATUM shifting, but first the operator must select the Local DATUM to be used, or provide the appropriate shift parameters. For AFCS operation, Local DATUMs are represented by two sets of parameters: the Local Ellipsoid (SPHEROID) and shift parameters as defined for each Local DATUM (DATUM IDs).

The BCS can provide the SPHEROID via the MAP MOD. The SPHEROID selected will determine which DATUM IDs will be available for selection. The AFCS/BCS SPHEROID and DATUM TABLE provides the SPHEROID number for the AFCS and BCS, which DATUM IDs that are available for that SPHEROID number and the normal coverage area. Note that there may be more than one DATUM ID associated with a Local DATUM because the shifts vary by locality. For other DATUMs or areas outside the indicated coverage area, User Defined (USRDEF) Datum shifts may be entered manually. The table is not intended as an absolute. A map sheet will identify the DATUM name, Ellipsoid (SPHEROID) name and the coordinate type, or the map sheet will identify the area. The data from a Trig list should identify the same information. These parameters must be correlated to the DATUM ID. If the applicable DATUM hasn't been programmed in the AFCS, shift parameters for many other DATUMs and regions have been published in DMA TR 8350.2 and may be entered thru the GPS X, Y and Z OFFSETs. Note that the AFCS can not accept shift parameters for all DATUMs because its SPHEROID capability is limited to those listed in the AFCS/BCS Table (Appendix J).

If the DATUM USRDEF is selected, then the GPS X, Y and Z offsets must be entered. These values must be obtained from the POC and should only be used with guidance from Battery Commander.

The ENTER USER DATUM PARAMETERS page should look like:

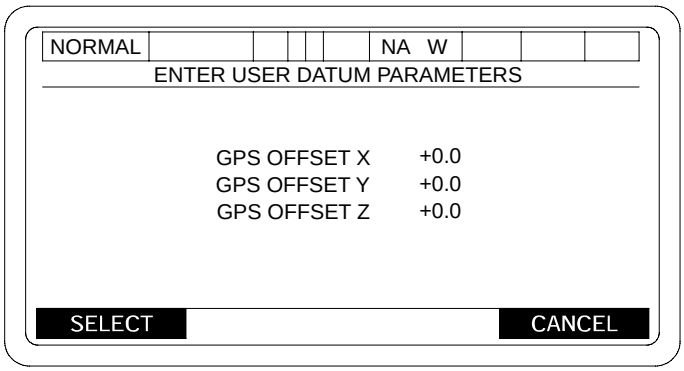


06pc113m

When GPS OFFSET X is selected:

Type -2000.0 to +2000.0
Press ENT key.

When GPS OFFSET Y is selected:

Type -2000.0 to +2000.0

When GPS OFFSET is selected:

Type -2000.0 to +2000.0

# 2-12 AFCS INITIALIZATION - CONTINUED

## 2-12.2 Initializing - Continued

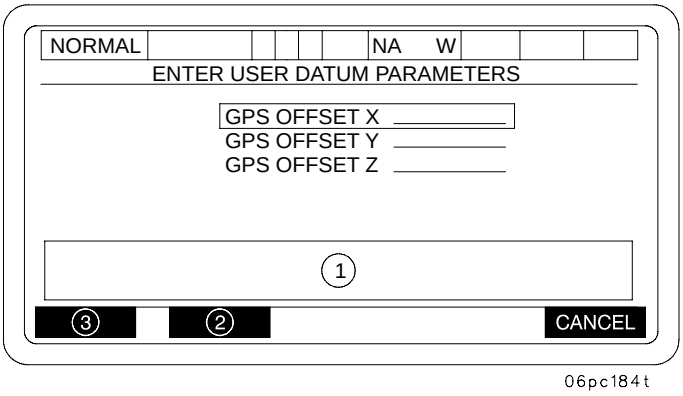


1 When any field selected:

TYPE OFFSET
BETWEEN -2000.0 AND +2000.0
-PRESS ENT KEY-

2 When field selected: + / -

Otherwise: USE ALL

3 When no fields are selected: SELECT

Otheriwse: BLANK

### NOTE

- Any un-edited DATA fields remain at their current values when USEALL KEY is pressed.
- SOFT KEY sequencing shall be as follows:

If CANCEL , then the SELECT DATUM menu will be displayed.

If USE ALL , then the ENTER MAP/DATUM menu will be displayed.

## 2-12 AFCS INITIALIZATION - CONTINUED

### 2-12.2 Initializing - Continued

(4) NAV UPDATE - Navigation Subsystem Update is performed as follows:

(a) With the Gun Tube in Travel Lock, park the howitzer at a known Survey Control Point (SCP) with the left sprocket within one meter of SCP.

(b) Box in *NAV UPDATE and press the SELECT soft key. This will bring up the NAVIGATION SUBSYSTEM UPDATE menu.

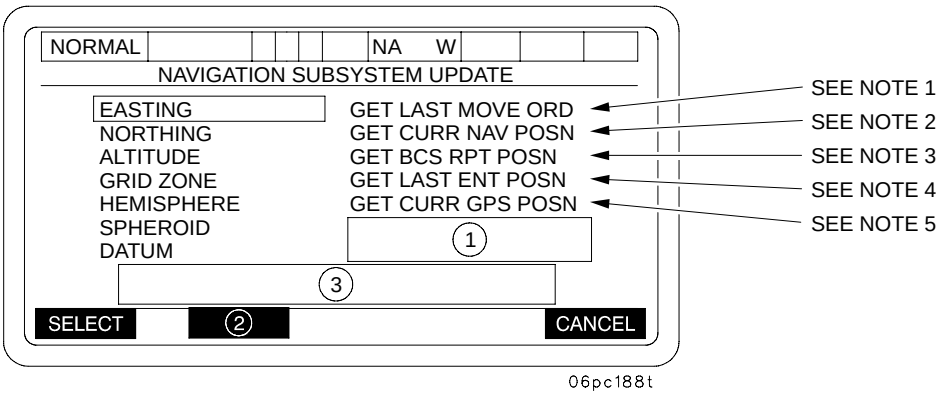


**NOTE**

The datum to be used is selected from the SETUP AND INFORMATION menu (Enter MAP/DATUM menu)

(1) This field contains OPERATOR PROMPTS and selections which depend on the current status of the NAVIGATION SUBSYSTEM

(2) When ALTITUDE SELECTED - **+/-**

otherwise - **USE ALL**

(3) This field contains OPERATOR PROMPTS for updating the values of: EASTING, NORTHING, ALTITUDE, and GRID ZONE:

When EASTING is selected:
Type EASTING 0 to 999999
Press ENT key

When NORTHING is selected:
Type NORTHING 0 to 10000000
Press ENT key

When ALTITUDE is selected:
Type ALTITUDE -1,000 to 10,000
Press ENT key

When GRID ZONE is selected:
Type GRID ZONE 1 to 60
Press ENT key

HEMISPHERE = NORTH or SOUTH
SPHEROID = 1 . . 9 and A . . I and USRDEF (not modifiable by operator)
DATUM = See Table in Appendix J (not modifiable by operator on this display)

## 2-12 AFCS INITIALIZATION - CONTINUED

### 2-12.2 Initializing - Continued

NOTE 1: Blank if no Move Order occurred since the last power up of the AFCS.

NOTE 2: Blank when Navigation Subsystem is not available.

NOTE 3: Available if position data has been sent from the BCS. Selection disappears when AFCS operator performs Nav Update or Move Order.

NOTE 4: Last coordinates on which position update was performed. Blank ifoperator has pressed the ARRIVED key at a position area since the last position update.

NOTE 5: Field is blank when the following conditions exist:

a. Navigation subsystem functionality not currently available.

b. GPS position data not currently available from the Navigation subsystem.

c. The GPS position data currently available has an estimated probable error greater than the navigation devices' "poor GPS data limit".

If the available GPS data has an estimated probable error greater than the Navigation device "Good GPS data limit", but less than or equal to the navigation device "Poor GPS data limit" when this menu item is selected, then the following alert will be placed on the soft key line:

USE DGRD GPS DATA? YES NO

If the YES soft key is pressed, then the available GPS data shall be used to update the listing, Northing, and Altitude fields on the menu. If the NO soft key is pressed, then the Easting, Northing, and Altitude fields on the menu will not be updated with the available GPS data.

**NOTE**

Use in accordance with unit SOP.

(c) RESTART REQUIRED - This prompt will appear in field (1). With the gun tube in travel lock, the Howitzer must be positioned at a Survey Control Point (SCP) with the left front sprocket within one meter on the SCP. No selection of RESTART REQUIRED is required, it will happen automatically and a full alignment will be performed. Enter the SCP data of EASTING, NORTHING ALTITUDE and GRID ZONE. When all data is entered, double check the SCP coordinates and MAP/DATUM SPHEROID, DATUM, and HEMISPHERE displayed on the screen. If it is not correct, make any correction. If it is correct, press the USE ALL soft key. The following prompt will be displayed:

"NAV POSITION UPDATE ABOUT TO START" "ARE YOU SURE" "YES" "NO"

Press the "YES" soft key, and the Navigation Position Update will be started. The SETUP AND INFORMATION menu will appear. The prompt "CMD" will appear in field (6), and then be replaced by the Align Time to Go countdown. Proceed with the rest of Initialization.

(d) NAV POSITION UPDATE - If this prompt is displayed in field (1), then only a Navigation Subsystem Position Update is required. With the gun tube in travel lock, the Howitzer must be positioned at a Survey Control Point (SCP), with the left front sprocket within one meter of the SCP. Enter the SCP data of EASTING, NORTHING and ALTITUDE. When all data is entered, double check the SCP coordinates and MAP/DATUM SPHEROID, DATUM, GRID ZONE and HEMISPHERE displayed on the screen. If it is not correct, make any correction. If it is correct, press the USE ALL soft key. The following prompt will be displayed:

"NAV POSITION UPDATE ABOUT TO START" "ARE YOU SURE" "YES" "NO"

Press the "YES" soft key, and the Navigation Position Update will be started. The SETUP AND INFORMATION menu will appear. The prompt "CMD" will appear in field (6), and then be replaced by the Align Time to Go countdown. Proceed with the rest of Initialization.

## 2-12 AFCS INITIALIZATION - CONTINUED

### 2-12.2 Initializing - Continued

(e) NAV RESTART – If the prompt NAV POSITION UPDATE is highlighted and selected, a message prompt “CHANGE TO RESTART” “YES” “NO” will appear. Press the “YES” soft key. “FORCE NAV RESTART” will appear. Press “USE ALL” then press the “YES” soft key to “ARE YOU SURE” prompt, the SETUP AND INFORMATION menu will be displayed and CMD will be displayed in field (6). This will be replaced with the Align Time to Go count down timer. The Navigation Subsystem aligns itself automatically.

**NOTE**

The Navigation Subsystem has 3 modes of alignment; Stored Heading Alignment, Normal Alignment and Dynamic Alignment.

(1) Stored Heading Alignment – Will occur only if the previous AFCS shutdown was orderly and the Howitzer or Turret has not moved since the last shutdown. This Alignment will take a maximum of 90 seconds, and will start as soon as the power is applied to the Navigation Subsystem. A NAV UPDATE is still required. But since the Howitzer has not moved since the last shutdown, all the NAV UPDATE data should be correct and only pressing the USE ALL soft key is required. If the Howitzer has been moved since the last shutdown, or the last shutdown was abnormal, or the Howitzer was moving during the last shutdown procedure, the Stored Heading Alignment will automatically be rejected and after a NAV UPDATE is performed the Navigation Subsystem will automatically perform a Normal Align.

(2) Normal Alignment – Will occur when ever a Stored Heading Alignment can not be performed. This alignment will take a maximum of 15 minutes (900 seconds). After the NAV UPDATE is performed and accepted, the Normal Alignment will automatically start, and the Align Time to Go counter will start counting down to 0. During the countdown, a message “OK TO MOVE OR SHOOT” “ACK” may appear before the countdown reaches 0. This means the Navigation Subsystem estimated Azimuth Error is within the bounds that are safe to move or shoot. At this point, a Move Order or Fire Missions may be performed. If the PLGR data is valid (i.e. the “A” is gone) the Align Time to Go counter will continue to countdown while the Howitzer is moving. If the PLGR is not valid (i.e. “A” is on), the timer will stop counting during movement and ZUPTs will be requested.

(3) Dynamic Alignment – A Dynamic Alignment is nothing more than a moving Normal Alignment, but the following conditions must be met: The PLGR must have data (i.e. the “A” is gone) and a NAV UPDATE must have been performed prior to movement. If these conditions are true, then the Howitzer may be moved before the “OK TO MOVE OR SHOOT” “ACK” is displayed. Move Orders and Fire Missions can not be performed, but as long as the PLGR is valid (i.e. the “A” is gone), the Align Time to Go timer will continue to countdown and the Navigation Subsystem will not require a RESTART. Moving prior to the “OK TO MOVE OR SHOOT” “ACK” must be done in accordance with Unit SOP.

## 2-12 AFCS INITIALIZATION - CONTINUED

### 2-12.2 Initializing - Continued

**NOTE**

AFCS supports two modes of Navigation Update; a Position Update and a Navigation Subsystem Restart. Normally, the Navigation Subsystem will align itself automatically, so only a Position Update is required.

(f) To perform a Nav Position Update, if entries are correct per unit SOP. If incorrect, this indicates that BCS DATA Transfer of the Map Mod was not successful in the previous step; press CANCEL, to return to the SETUP AND INFORMATION menu and repeat the BCS DATA XFER procedure to get initialized by BCS. If GRID ZONE, HEMISPHERE and SPHEROID entries are correct, then enter, in turn, EASTING, NORTHING, and ALTITUDE as follows: for each item, first box in the item, then press SELECT key. Use keypad to type in value. Press ENT key. Press USE ALL to complete the NAV UPDATE and return to the SETUP AND INFORMATION menu.

If invalid data is entered, the Navigational System will reject it and ask for data re-entry. Press ACK key to acknowledge Alert and re-enter data.

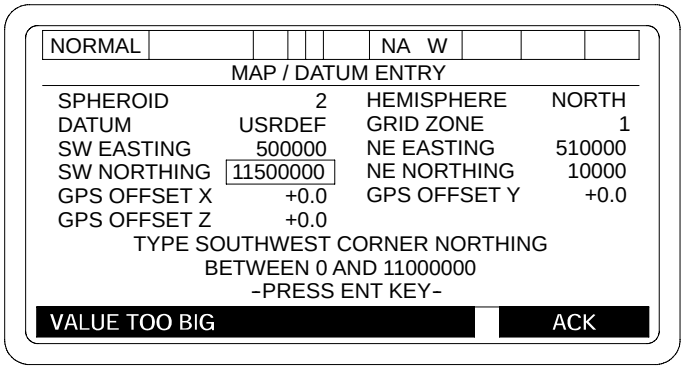


06pc116m

(5) AMMO INVENTORY - Ammunition inventory must be done before the AFCS will accept a fire mission. Inventories must be complete and accurate before the system initialization is completed. The three parts of the inventory records, Shells, Propellants, and Fuzes, are updated as follows:

## 2-12 AFCS INITIALIZATION - CONTINUED

### 2-12.2 Initializing - Continued

(a) Box in AMMO INVENTORY from the SETUP AND INFORMATION menu. Then press SELECT key. This will cause an INVENTORY MANAGEMENT menu to be displayed. Box in either EDIT CURRENT AFCS or EDIT BCS PROVIDED data. Press SELECT key. This will cause an INVENTORY MANAGEMENT menu to be displayed.

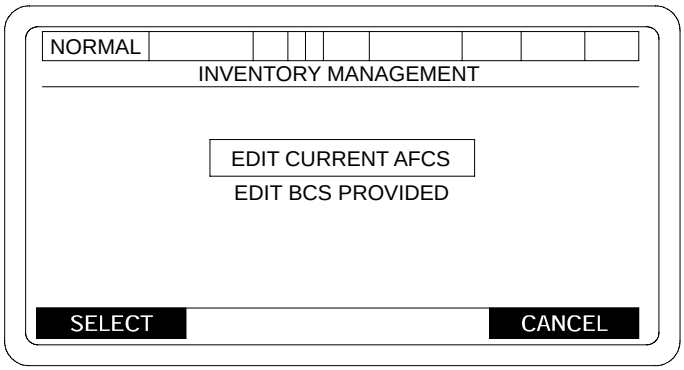


06pc117m

**NOTE**

- This menu will not be displayed when BCS Provided Inventory Data is not available at the AFCS.
- You can request the POC to provide your Ammo Inventory from the BCS if you know it is a correct count. Use BCS DATA XFER to GET AMMO STATUS (para 2-12.2.d(2)).

# 2-12 AFCS INITIALIZATION - CONTINUED

## 2-12.2 Initializing - Continued

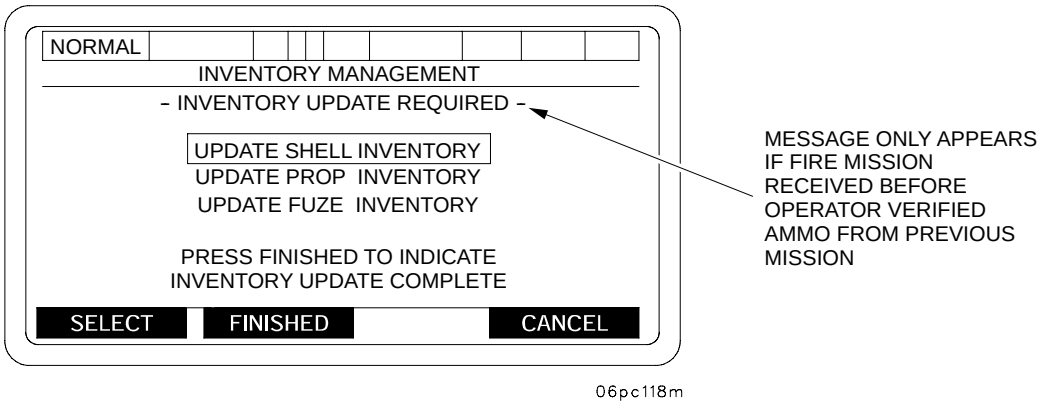


**NOTE**

If a Fire Mission is activated while in any of the ammunition inventory submenus, all valid complete entries will be saved.

FINISHED = When the Finished key is pressed the ammunition inventory shall be reviewed to insure each group of projectiles has at least one propellant and each group of propellants has at least one projectile. If a projectile is found without a propellant or a propellant without a projectile, the AFCS will display Projectile/Propellant Mismatch menu.

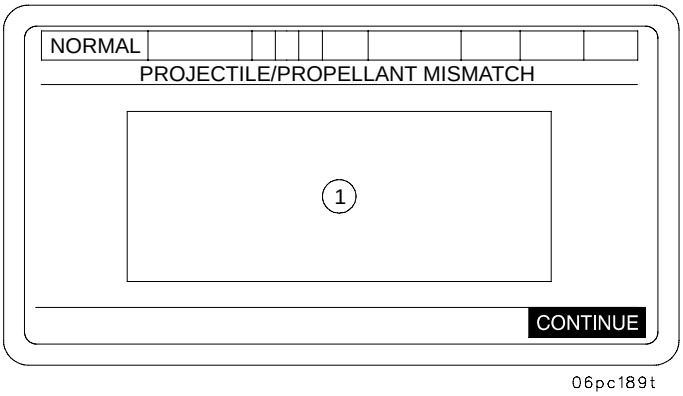


CONTINUE = Will display INVENTORY MANAGEMENT menu.

1 = NO "US" PROJECTILE MATCH and or
NO "US" PROPELLANT MATCH

**NOTE**

Use Up and DOWN keys to scroll.

## 2-12 AFCS INITIALIZATION - CONTINUED

### 2-12.2 Initializing - Continued

(b) Box in UPDATE SHELL INVENTORY. Press SELECT key. This will cause an UPDATE SHELL INVENTORY menu to be displayed.

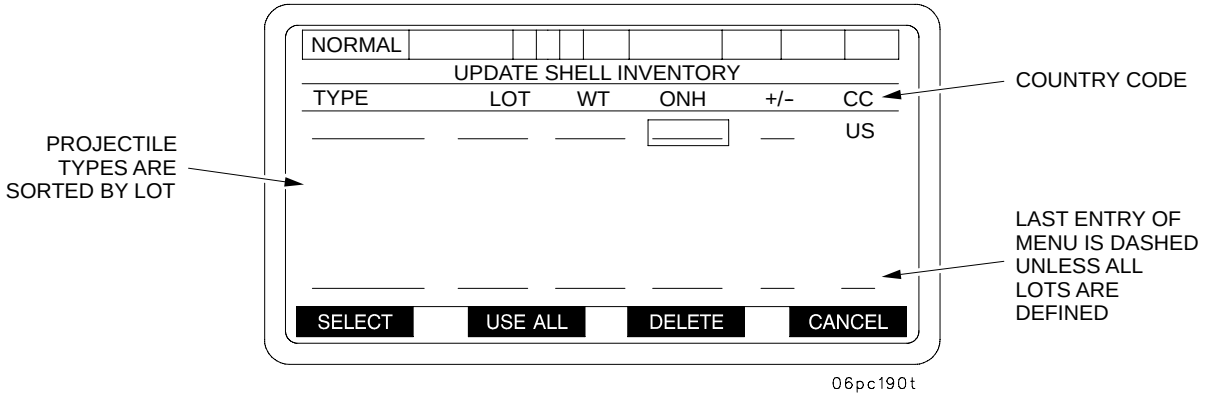


**NOTE**

Pressing the DELETE key will cause the selected shell to be deleted from inventory no matter where on the inventory line the selection box is positioned.

(c) To add a new entry, box in the first blank line. Press SELECT key. This will cause an UPDATE SHELL INVENTORY-SELECT SHELL TYPE menu to be displayed.

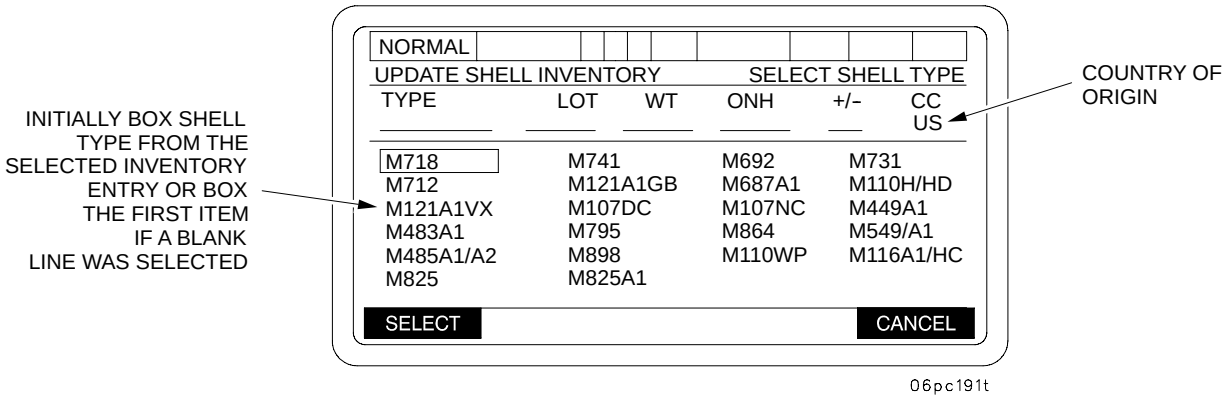

## 2-12 AFCS INITIALIZATION - CONTINUED

### 2-12.2 Initializing - Continued

(d) Press SELECT key to display a SELECT LOT menu.

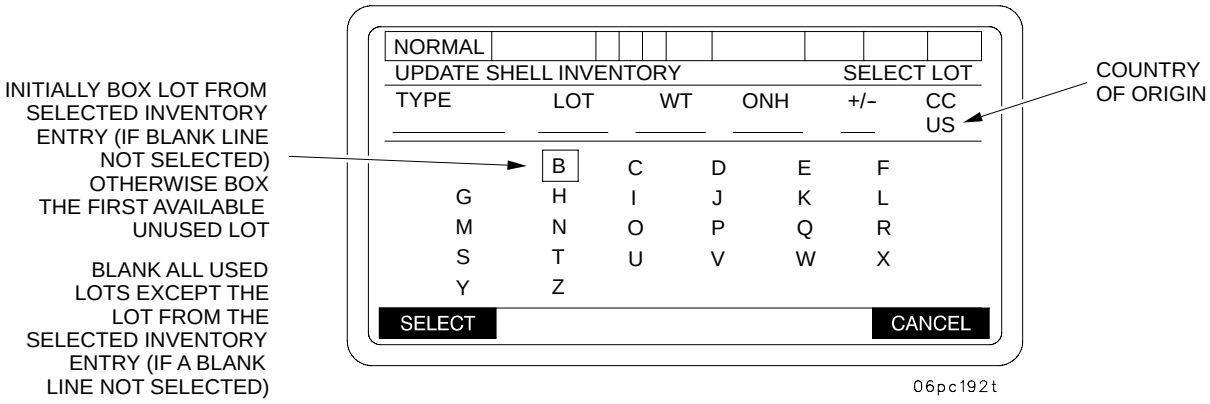


(e) Box in Lot choice and press SELECT key. This will cause a lot designator to be assigned to the selected shell. Once a lot selection is made, that designator (letter) will disappear. This prevents using same lot twice. When the SELECT key is pressed, an EDIT LOT/TYPE DESIGNATION menu will be displayed.

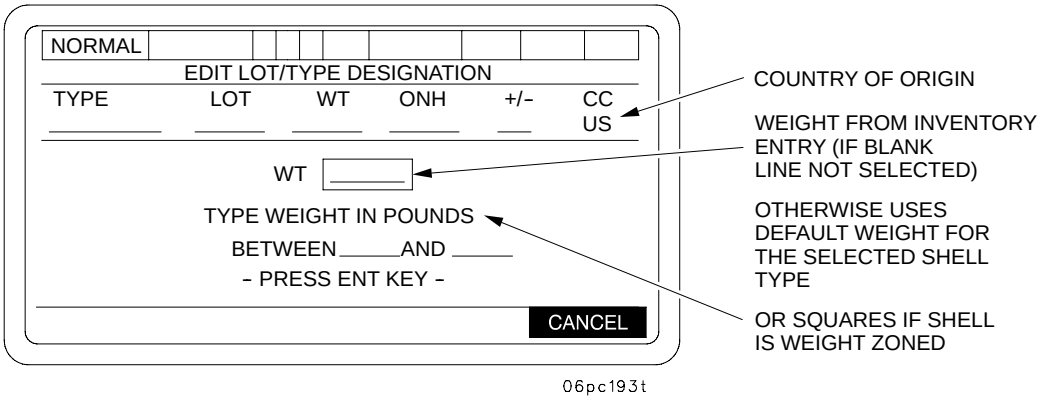


(f) If shell weight is not the same as default weight, type in new weight and press ENT key. This will cause the UPDATE SHELL INVENTORY menu to be displayed.

**NOTE**

Weight will be displayed in pounds or squares.

## 2-12 AFCS INITIALIZATION - CONTINUED

### 2-12.2 Initializing - Continued

(g) Move box to proper column (ONH, ADD or SUB) in desired line and press SELECT key. A prompt to TYPE SHELL QUANTITY will be displayed. Type in new quantity and press ENT key. New quantity will be displayed.

(h) When all shell data has been updated or edited, press USE ALL key to return to INVENTORY MANAGEMENT menu.

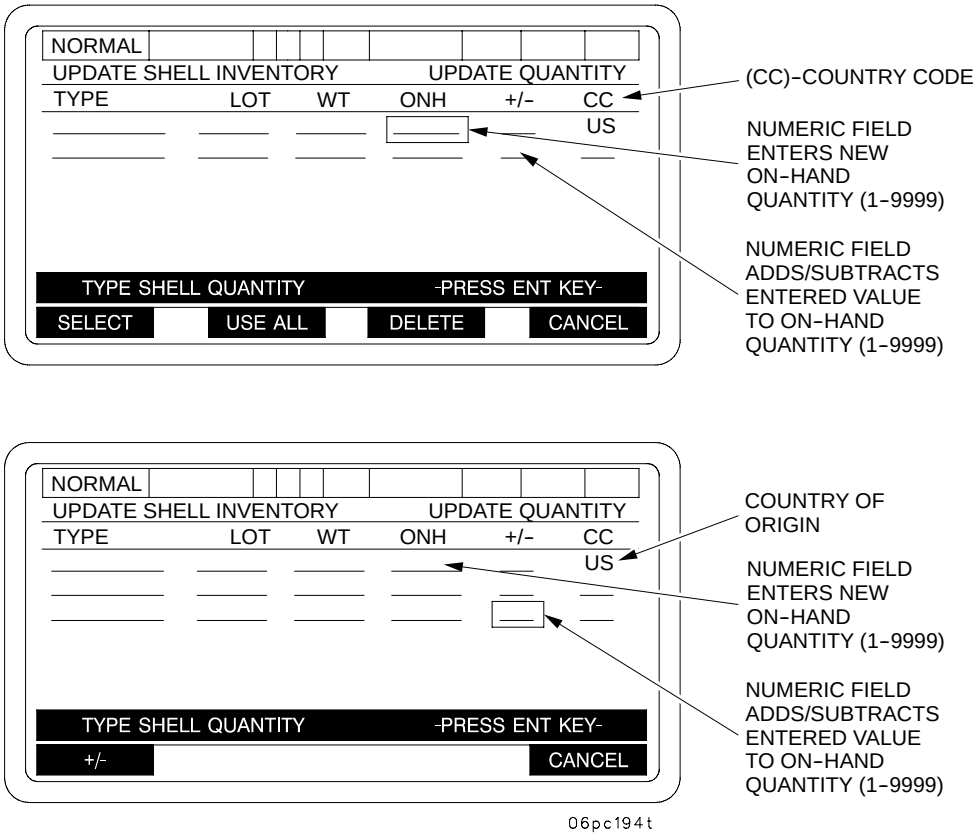

## 2-12 AFCS INITIALIZATION - CONTINUED

### 2-12.2 Initializing - Continued

(i) Box in UPDATE PROP INVENTORY on INVENTORY MANAGEMENT (UPDATE) menu. Press SELECT key to display UPDATE PROP INVENTORY menu.

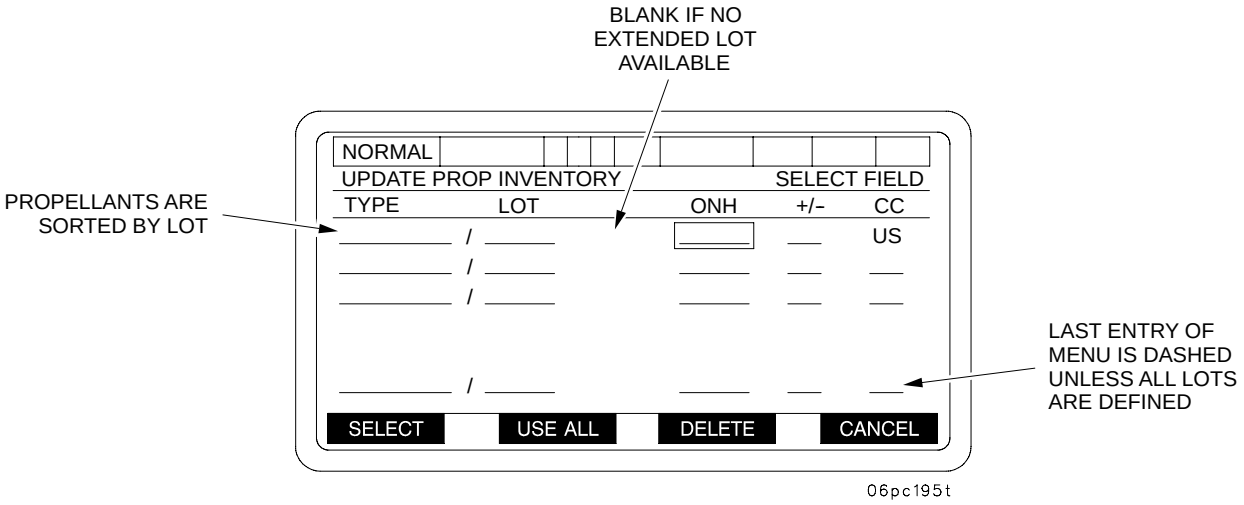


**NOTE**

The DELETE key shall cause the selected propellant to be deleted from inventory no matter where on the inventory line the selection box is positioned.

(j) To add a new entry, box in the first blank line on UPDATE PROP INVENTORY menu. Press SELECT key to display SELECT PROP TYPE menu. Box in propellant type and press SELECT key.

**NOTE**

The data displayed on the third line of this display is that given in the selected inventory entry (either a blank line or an existing entry) and is updated as entries are made.

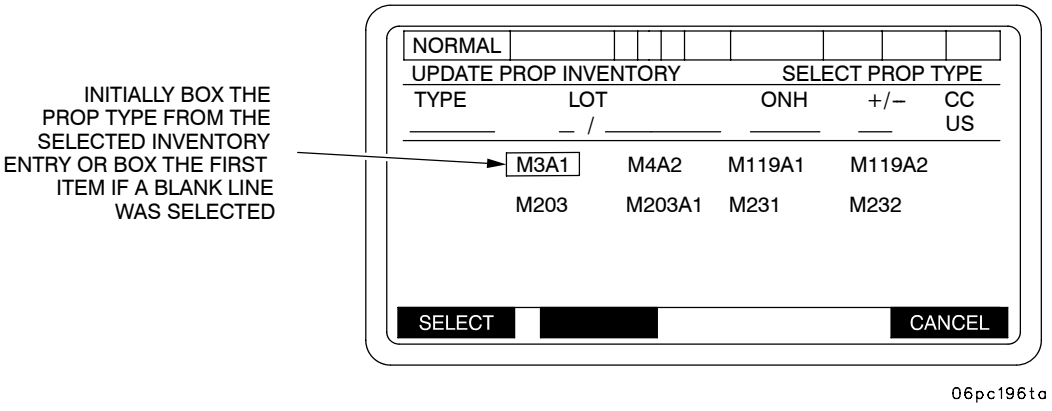

## 2-12 AFCS INITIALIZATION - CONTINUED

### 2-12.2 Initializing - Continued

(k) When the SELECT key on the Select Prop Type screen is pressed the ENTER LOT menu will be displayed.

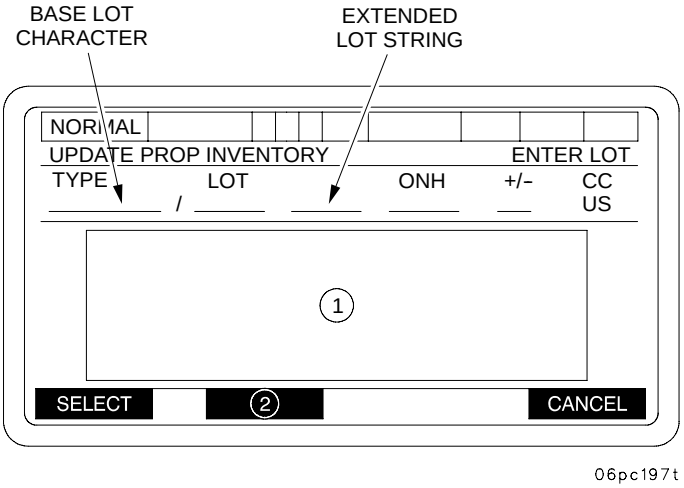


(1) On initial entry to this display, the cursor box is on the base lot from the selected inventory entry (if a blank line was not selected). Otherwise, box the first available unused base lot letter. The base lot location in the upper display is highlighted in reverse video. All base lots currently in the propellant inventory are deleted from the selection area (except for the selected inventory entry base lot if not on a blank inventory line).

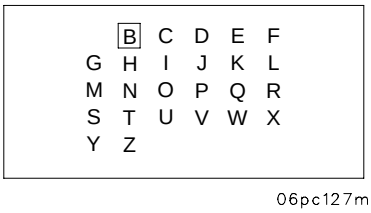


After the base lot is selected, the extended lot editing function is entered. All alphabetic characters as well as numeric and highlight movement characters are made available for operator selection. The reverse video highlight is initially moved to the first character position (left most character) in the extended lot string. Highlight movement will wrap at the ends of the extended lot string. Pressing the CLR key will erase the character under the reverse video highlight.

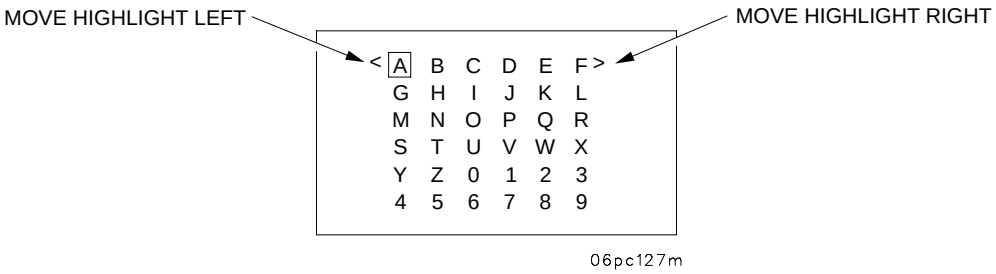


(2) Blank - until extended lot string editing begins
USE ALL - while editing the extended lot string

## 2-12 AFCS INITIALIZATION - CONTINUED

### 2-12.2 Initializing - Continued

When USE ALL key is pressed, the extended string is compared with other extended lot codes in inventory. If a duplicate extended lot string is found, a short error message will be displayed.

DUPLICATE EXTENDED LOT FOUND | ACK

When ACK is pressed, the extended lot editing function will be resumed and the highlight will be at the last character position prior to pressing USE ALL. Before pressing USE ALL, enter a different extended lot.

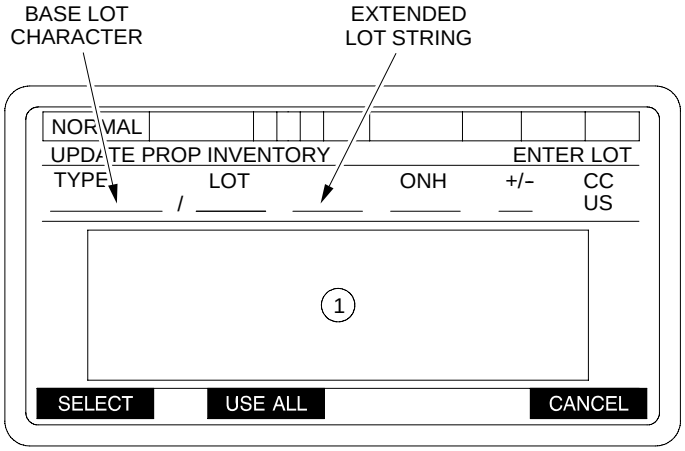


06pc198t

(l) When the USE ALL key is pressed, the Update Prop Inventory menu is displayed. Box in either +/- column and press SELECT key. Type in new quantity and press ENTER key. New quantity will be displayed.

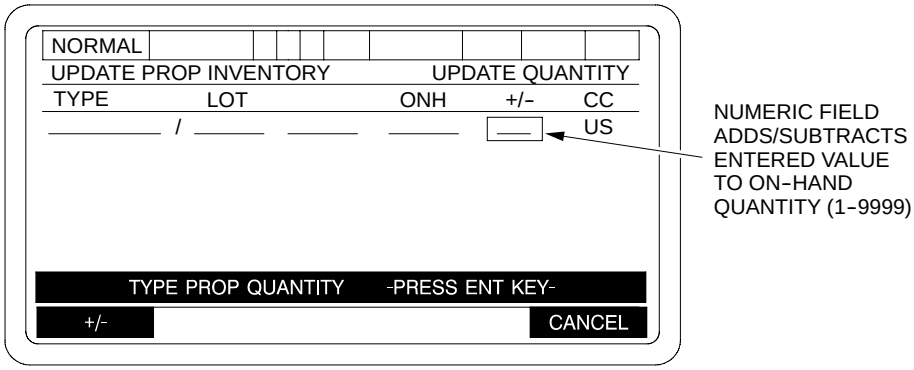


06pc199t

**NOTE**

The +/- soft key will appear when the +/- column is selected. If you select the ONH column, the +/- soft key will not appear.

## 2-12 AFCS INITIALIZATION - CONTINUED

### 2-12.2 Initializing - Continued

(m) When propellant types have been updated or edited, press USE ALL key. This will cause the INVENTORY MANAGEMENT menu to be displayed.

(n) Box in UPDATE FUZE INVENTORY on INVENTORY MANAGEMENT menu. Press SELECT key to display UPDATE FUZE INVENTORY - SELECT FIELD menu. To add a new entry, move box to the first blank line. Press SELECT key. A SELECT FUZE TYPE menu will be displayed.

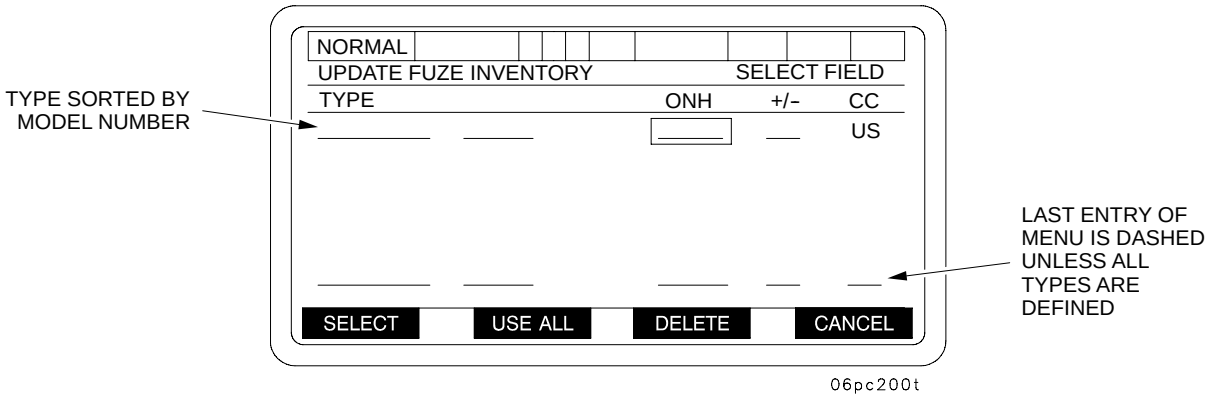


**NOTE**

The DELETE key shall cause the selected fuze to be deleted from inventory no matter where on the inventory line the selection box is positioned.

(o) Box in FUZE TYPE and press SELECT key. Move box to proper column (ONH, or +/-). Press SELECT key. Type in quantity and press ENT key.

**NOTE**

The data displayed on the third line of this display is that given in the selected inventory entry (either a blank line or an existing entry) and is updated as entries are made.

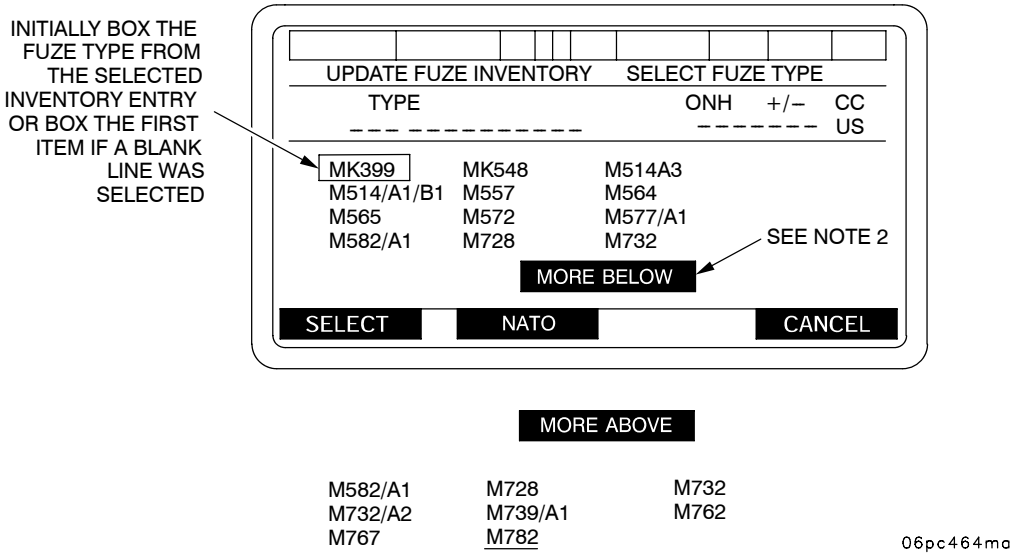

## 2-12 AFCS INITIALIZATION - CONTINUED

### 2-12.2 Initializing - Continued

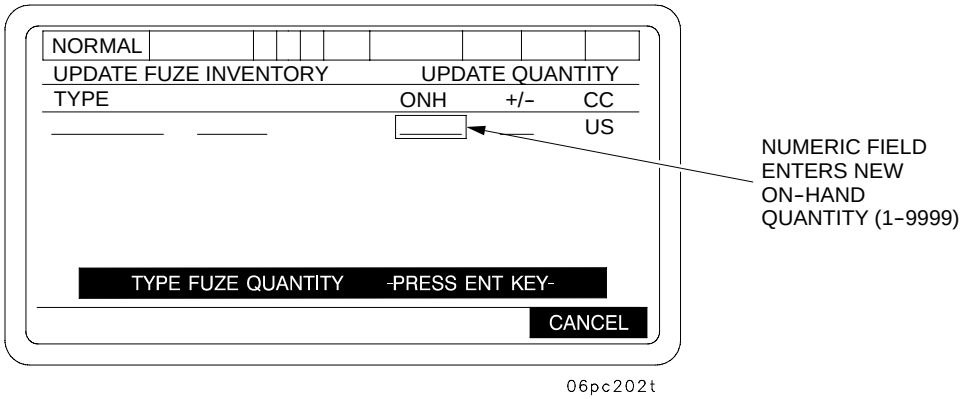


**NOTE**

The +/- Softkey will appear when the +/- column is selected. If you select the ONH column, the +/- Softkey will not appear.

(p) When fuzes have been updated, press USE ALL key to return to INVENTORY MANAGEMENT menu.

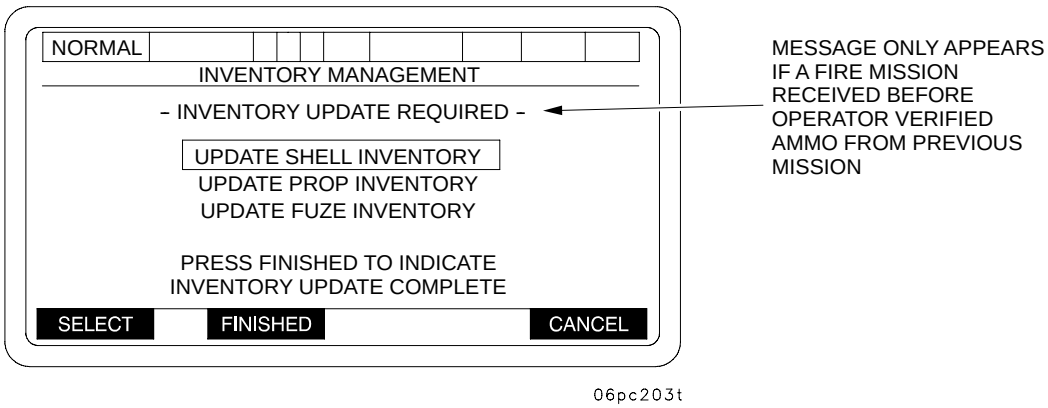


**NOTE**

- If a fire mission is activated while in any of the ammunition inventory sub-menus, all valid complete entries with consistent projectile/propellant, country code matches shall be saved.
- If the CANCEL Softkey is selected all edits will be ignored.

FINISHED - When the finished key is pressed the ammunition inventory shall be reviewed to insure each group of projectiles has at least one propellant and each group of propellants has at least one projectile. If a projectile group is found without a propellant or a propellant without a projectile, the AFCS will display PROJECTILE/PROPELLANT MISMATCH menu. Pressing the CONTINUE Softkey on this menu will return operator to the INVENTORY MANAGEMENT menu, at which time the operator has to update SHELL/PROP inventory.

## 2-12 AFCS INITIALIZATION - CONTINUED

### 2-12.2 Initializing - Continued

(q) When all ammunition data has been entered or updated, press FINISHED key to display the SETUP AND INFORMATION menu.

(6) PROPELLANT TEMPERATURE - Must be entered in order to complete initialization. After ammunition has been received, a propellant temperature should be obtained by the crew using a calibrated propellant temperature gage. Propellant temperatures are entered as follows:

**NOTE**

- Accurate propellant temperatures must be entered in order for AFCS to accurately compute Muzzle Velocity Variances.
- Numerical value must be entered before sign. Default sign is (+).

(a) Box in PROP TEMP from SETUP AND INFORMATION menu. Press SELECT key. A PROPELLANT TEMPERATURE menu will be displayed. Type in correct temperature and press ENT key.

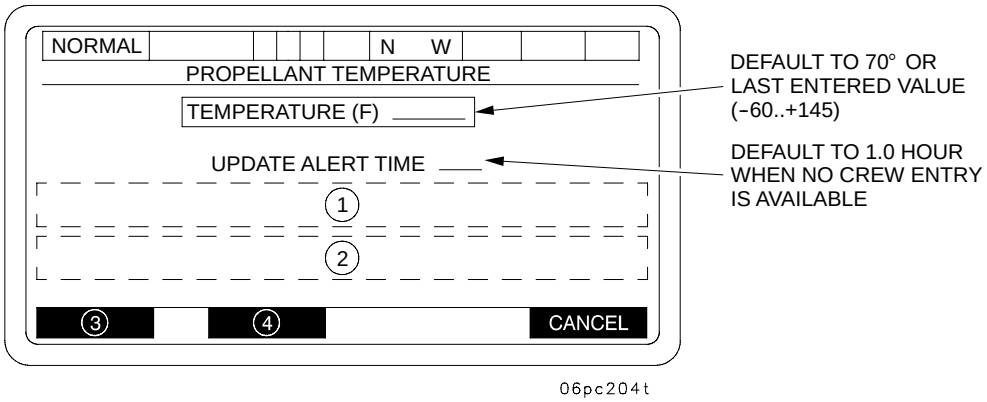


(1) TIME TO GO XX:XX (HOURS:MINUTES) OR TIME EXCEEDED

(2) WHEN TEMPERATURE SELECTED

TYPE TEMPERATURE IN FAHRENHEIT DEGREES: -60 TO +145
- PRESS ENT KEY -

WHEN UPDATE ALERT TIME SELECTED

TYPE UPDATE TIME IN 0.5 HOUR INCREMENTS 0.5 TO 2.0
- PRESS ENT KEY -

(3) BLANK - When TEMPERATURE or UPDATE ALERT TIME selected

SELECT - When item is not selected

(4) USE ALL - When no item is selected

+/- When temperature is selected
BLANK - When UPDATE ALERT TIME is selected

## 2-12 AFCS INITIALIZATION - CONTINUED

### 2-12.2 Initializing - Continued

(b) If a temperature outside allowable range is input, operator alert “VALUE TOO BIG” or “VALUE TOO SMALL” will appear when ENT key is pressed. The ACK key must be pressed to return to the PROPELLANT TEMPERATURE menu to enter correct temperature.

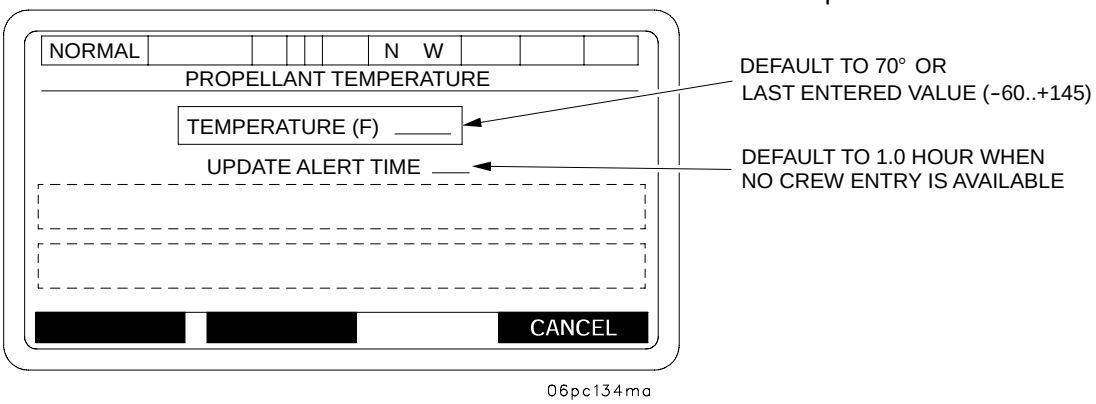


(c) A propellant temperature is input during initialization by selecting PROP TEMP from the SETUP AND INFORMATION menu to display the PROPELLANT TEMPERATURE menu. The operator is allowed to enter the propellant temperature. If no temperature is entered the AFCS will use the default value of 70 degrees F. To enter the propellant temperature, place cursor to TEMPERATURE (F), press the soft key under SELECT prompt. An operator prompt “TYPE TEMPERATURE IN FAHRENHEIT DEGREES -60 TO +145 --PRESS ENTER KEY” will appear. Type in propellant temperature and press ENT key. In addition, the AFCS incorporates a timed audible and visual alert to the operator to warn that a propellant temperature update is required. The time interval to use for the audible and visual alerts are selectable on the PROP TEMP menu, from 30 minutes (0.5 hours) to 120 minutes (2.0 hours) in 30 minute increments. The alert time is defaulted to 1.0 hour when no time is entered by the operator. To set alert time, place cursor on UPDATE ALERT TIME, and press soft key under SELECT prompt. An operator prompt, “TYPE UPDATE TIME IN 0.5 HOUR INCREMENTS 0.5 TO 2.0, PRESS ENTER KEY. When the operator has successfully entered the propellant temperature and alert time return to SETUP AND INFORMATION menu by pressing soft key under USE ALL prompt. When correct propellant temperature and alert time have been entered, pressing USE ALL will display the SETUP AND INFORMATION menu.

(7) MUZZLE VELOCITY VARIANCE (MVV) - To set the minimum number of rounds that will be used in calculating muzzle velocity variances, select the MVV ROUNDS from the SETUP AND INFORMATION screen.

NOTE: 1. The entry field will display the current MVV rounds selected and will default to 4 on systems initialization.

2. To use the MVV, you must have an extended lot code in the AFCS inventory.

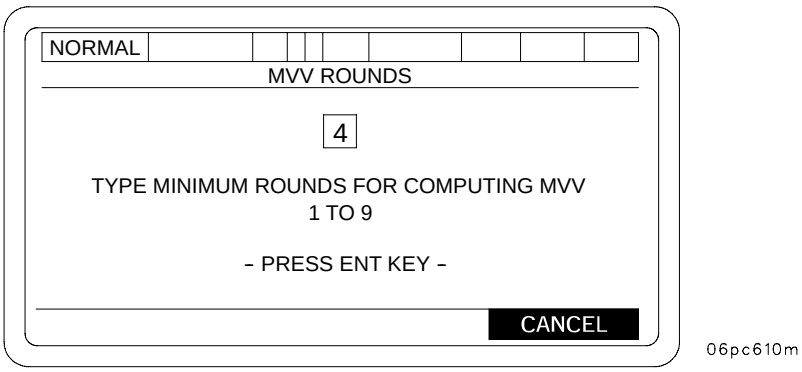

## 2-12 AFCS INITIALIZATION - CONTINUED

### 2-12.2 Initializing - Continued

(8) TOT RESPONSE TIME - This is used to set crew time response for a specific fire mission. The data tells the AFCS how much advance warning a crew needs before a Time on Target (TOT) mission is to be fired. This data is entered as follows:

(a) Box in TOT RESPONSE from SETUP AND INFORMATION menu. Press SELECT key to display a TIME ON TARGET CREW RESPONSE TIME menu.

(b) Enter data for response time and press the ENT key. This will return the display to the SETUP AND INFORMATION menu.

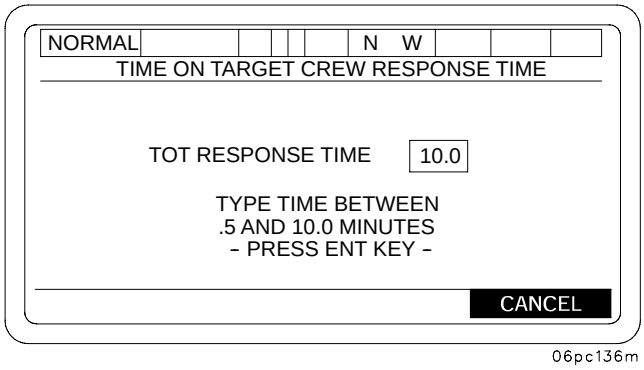


(9) LOAD ELEVATION - This data is entered in the AFCS to specify an elevation that the gun tube will automatically return to after firing when the LOAD key is pressed on the DU panel. Enter LOAD ELEVATION as follows:

(a) Box in LOAD ELEVATION from the SETUP AND INFORMATION menu. Press SELECT key to display a TUBE LOAD ELEVATION menu.

**CAUTION**

Do not enter an elevation greater than 300 mils. Settings above 300 mils may result in breech failing to close and could cause unnecessary wear on spring pack.

**NOTE**

Numerical value must be entered before sign. Default sign is (+).

(b) Type in desired elevation data and press ENT key. The SETUP AND INFORMATION menu will be displayed.

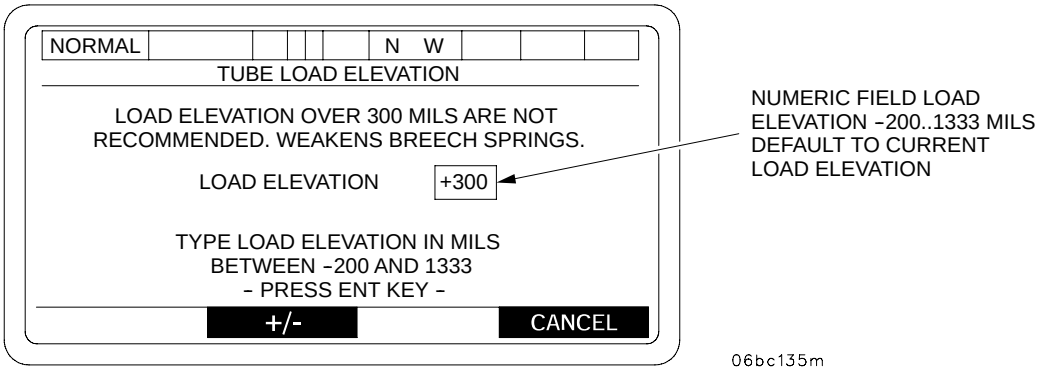

## 2-12 AFCS INITIALIZATION - CONTINUED

### 2-12.2 Initializing - Continued

(10) SECTOR OF FIRE - Used to define the howitzer's sector of fire. Data is entered as follows:

(a) Box in SECTOR OF FIRE from SETUP AND INFORMATION menu. Press SELECT key to display DEFINE SECTOR OF FIRE menu.

(b) Box in LEFT LIMIT OF SECTOR. Press SELECT key. Enter data. Press ENT key. Move box to AOF. Press SELECT key. Enter data. Press ENT key. Move box to RIGHT LIMIT OF SECTOR. Press SELECT key. Enter data. Press ENT key.

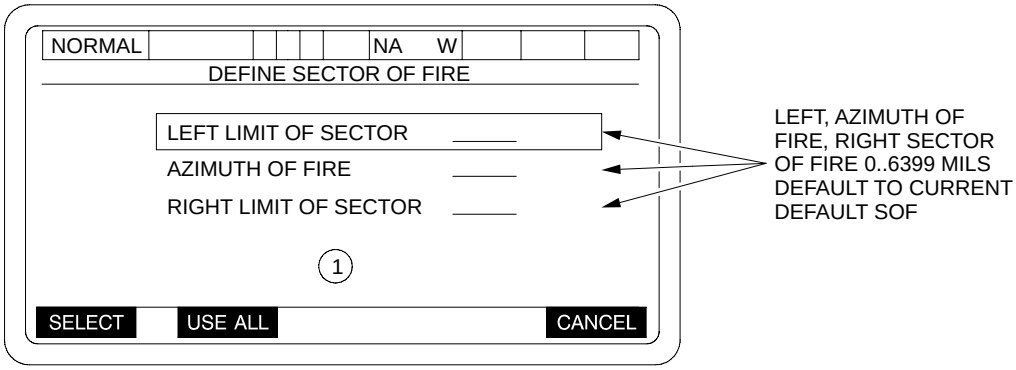


06pc205t

IF LEFT = RIGHT

ERROR - LEFT AND RIGHT EQUAL ACK

If AZIMUTH OF FIRE is not to RIGHT OF LEFT LIMIT and LEFT OF RIGHT LIMIT.

ERROR - AZIMUTH OF FIRE NOT IN SECTOR ACK

(1) BLANK: No selection made

Selection made:

"TYPE AZIMUTH BETWEEN 0 AND 6399 MILS"

"PRESS ENT KEY"

**NOTE**

- Operator entered Sector of Fire data will be used by the AFCS during Move Orders to help orient the vehicle during emplacement at a Firing Point/Firing Area.
- During Emplacement after a Move Order, this AOF will be "Base Azimuth" for 3200 Deflection.
- SECTOR OF FIRE entered by the operator will be used to calculate ballistic. If BCS has not sent SECTOR OF FIRE for prescribed location (FIRING AREA/POINT).

(c) When all correct data has been entered, press USE ALL key to enter data and return to SETUP AND INFORMATION menu. Operator entered Sector of Fire data will update the Site Data display.

## 2-12 AFCS INITIALIZATION - CONTINUED

### 2-12.2 Initializing - Continued

(d) When all initialization data (Asterisk items from SETUP AND INFORMATION menu) has been entered, and the navigation subsystem alert “OK TO MOVE OR SHOOT”, “ACK” has been displayed and the ACK key pressed, then press CANCEL key on SETUP AND INFORMATION menu to bring up a SECTION IN ORDER AT INITIALIZATION POINT display.

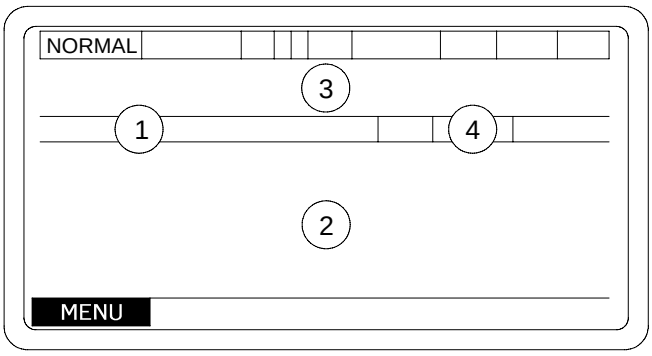


06pc138m

1 “FPF/PRI EXISTS” FPF/PRI TARGET EXISTS IN STORED TARGET TABLE
“NO FPF/PRI EXISTS” - FPF/PRI TARGET DOES NOT EXIST IN STORED TARGET TABLE

2 “SECTION IN ORDER AT LOGISTICS POINT” - ARRIVAL LOCATION IS LOGISTICS POINT “SECTION IN ORDER AT INITIALIZATION POINT” - ARRIVAL LOCATION IS INITIALIZATION POINT

3 DO NOT MOVE - NO FPF/PRI EXISTS
DO NOT MOVE / DO NOT LOAD - FPF-PRI TARGET EXISTS

4 TUBE TEMPERATURE STATUS

## 2-12 AFCS INITIALIZATION - CONTINUED

### 2-12.3 Initialization After an Orderly Shutdown.

**WARNING**

When operating the PLGR on external power with BA-5800 lithium battery installed, the battery may explode. Ensure battery is removed before connecting power cable to prevent serious injury or death.

**NOTE**

M93 MVS must be installed and connected prior to turning the vehicle MASTER power switch ON.

During AFCS operation, it may become necessary to power down and then back up; e.g., a system lockup occurs.

**NOTE**

After AFCS has been powered down, the AFCS will power up and be operational in approximately 3-4 minutes.

Power down in this form causes an orderly shutdown, and some of the AFCS data is saved. An orderly shutdown also occurs when the power is turned off after normal operations. Some of the data saved on orderly shutdown is Net Access, Net Address, Ammo Inventory, Navigation Data (location where system was powered down), TOT Response, Load Elevation, and the last operator-entered Sector of Fire. When the system is turned back on from an orderly shutdown, step-by-step initialization is not necessary, although action on all asterisk marked items on the SETUP AND INFORMATION menu must be accomplished. The process for initialization after an orderly shutdown is as follows:

a. System Power Up. Set MASTER switch and Power Conditioner Unit circuit breakers to ON.

With the PLGR in the PLGR mount and all external cables attached, press the ON/BRT key on the PLGR key pad. The PLGR should power up automatically and perform its self-test (BIT). Operate the PLGR in accordance with the PLGR TM 11-5825-291-13.

If the PLGR does not have a current key (i.e. the PLGR was previously “zeroized”, newly installed or the key has expired), then load a valid key in accordance with the PLGR TM 11-5825-291-13, Section 3.6.

**NOTE**

To load a key, the DRUH must be off, or the P4 DRUH-PLGR Signal Connector must be disconnected to cause a PLGR COM FAIL. Simple re-attachment of P4 DRUH-PLGR Signal Connector after PLGR keying will automatically cause DRUH-PLGR communications to resume if DRUH is on.

If the PLGR antenna has a clear view of the sky, turn PLGR on. If the antenna’s view of the sky is blocked (e.g. the vehicle is in a building, under tree cover or parked next to a large structure), move vehicle until the PLGR is clear.

If the vehicle can not be moved, keep PLGR turned off until the vehicle can be moved to a location with a clear view of the sky.

## 2-12 AFCS INITIALIZATION - CONTINUED

### 2-12.3 Initialization After an Orderly Shutdown - Continued

**NOTE**

- If the PLGR is off, the Navigation Subsystem will still accept initialization data from the AFCS for inertial operation and the Navigation System will operate as before.
- Guidelines for conditions and times for the PLGR to obtain position data acceptable by the AFCS.

(1) If the antenna has a clear view of the sky and PLGR has a valid position, current GPS time, current GUV key, and has stored a current satellite almanac, PLGR will be acceptable for use in about three minutes following the first turn-on of the day. It will take about 90 seconds for subsequent turn-ons. These are the normal operating conditions.

(2) If the antenna has a clear view of the sky and PLGR has a current GUV key but the PLGR doesn't have a valid position, current GPS time, or current satellite almanac, it may take up to 20 minutes after turn-on for the PLGR to output data of acceptable accuracy.

(3) If the PLGR has a valid position, current GPS time, current key, and current satellite almanac, but the antenna is masked from a clear view of the sky when PLGR is turned on, it may take up to 20 minutes to get acceptable data after the vehicle is moved to a location with a clear view of the sky. This results from the PLGR initiating a search for all possible satellites if it can't lock on to those expected, for its current position, time, and almanac, within a reasonable time interval.

(4) If the PLGR doesn't have a current key, its data won't be acceptable for use by the AFCS. However, assuming a clear view of the sky, it can be turned on to initialize position, time, and satellite almanac in about 20 minutes. Then when a valid key is loaded, the PLGR will be ready to go within three minutes.

**NOTE**

M93 MVS must be installed and connected prior to turning the vehicle MASTER power switch on.

Make sure TRAINING switch on DU is OFF. Set POWER switch on DU to ON. When power is first applied to the AFCS, the display will be blank and the AFCS will automatically perform its internal self-test (BIT). Next a screen will be displayed with this message "AFCS OPERATING SYSTEM BOOT UP...PLEASE WAIT...", followed by an "INITIALIZATION IN PROGRESS..." screen.

**NOTE**

- The time lapse between first three screens can range from 3 to 5 minutes.
- If screen stays blank for more than 7 minutes, power down system.

A "SYSTEM VERIFICATION FAILURE" screen may be displayed only if the SYSTEM VERIFICATION report indicates a failure.

## 2-12 AFCS INITIALIZATION - CONTINUED

### 2-12.3 Initialization After an Orderly Shutdown - Continued

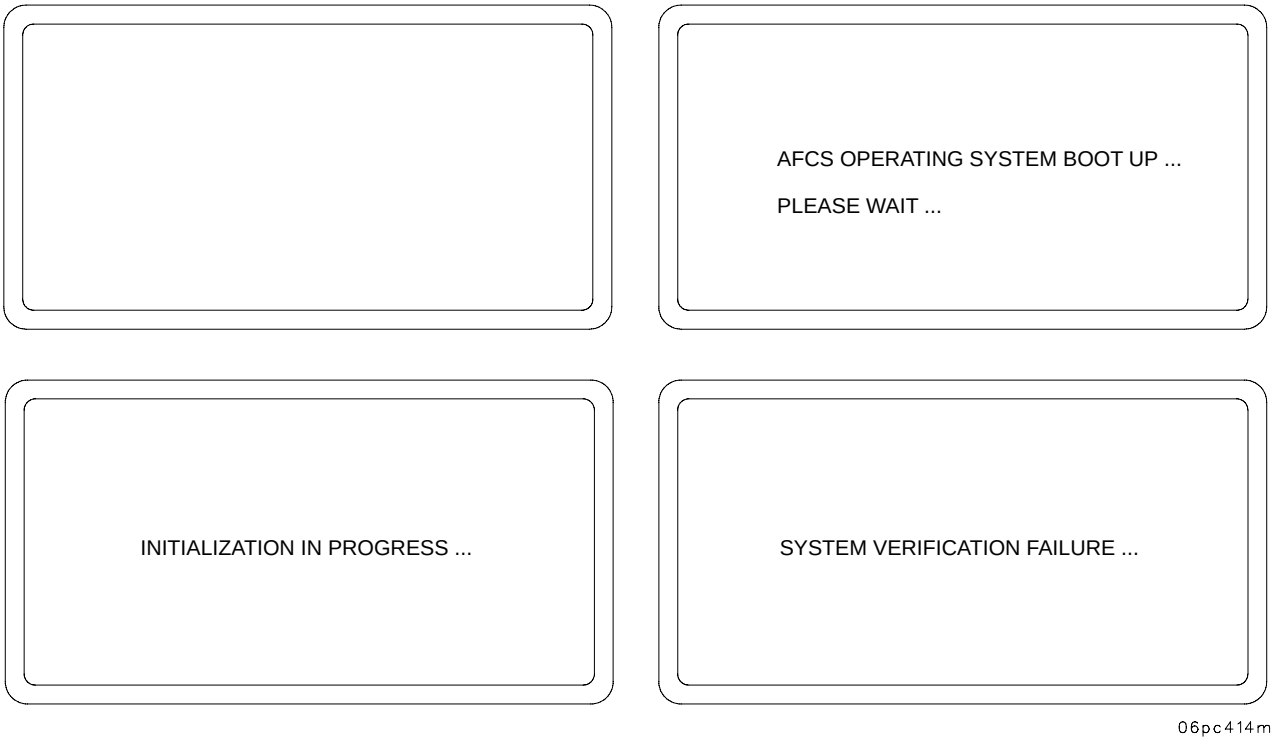


After the AFCS powers up, the PLGR screen should read:

REMOTE CONTROL
Only ZEROIZE key
activated

At this point the PLGR key pad will become inactive. The only PLGR operation allowed using the key pad is EMERGENCY ZEROIZE.

If this message is not displayed on the PLGR screen, and the Low Priority Message "GPS OUT - PLGR DISCONNECTED" is not displayed on the DU, ensure that the DRUH-PLGR Signal Connector (P4) plug on the W17A cable is connected and secure. Once this PLGR screen is displayed, proceed with system initialization.

**NOTE**

- NAV SUBSYSTEM includes: VMS, DRUH, VMS Modems
- PCU SUBSYSTEM includes: PCU and both Back-Up Batteries
- The switches on the PCU are circuit breakers. They should be left ON at all times, so they will not wear out from being turned off and on constantly.

## 2-12 AFCS INITIALIZATION - CONTINUED

### 2-12.3 Initialization After an Orderly Shutdown - Continued

(5) This screen displays the subsystems that are checked by BIT. As the subsystems are checked, the dashed lines will change to a subsystem status (OK, DEGRADED, OUT, - -). The - - appears on the MVS status line when the AFCS could not be connected to the MVS. This screen also identifies the system software version.

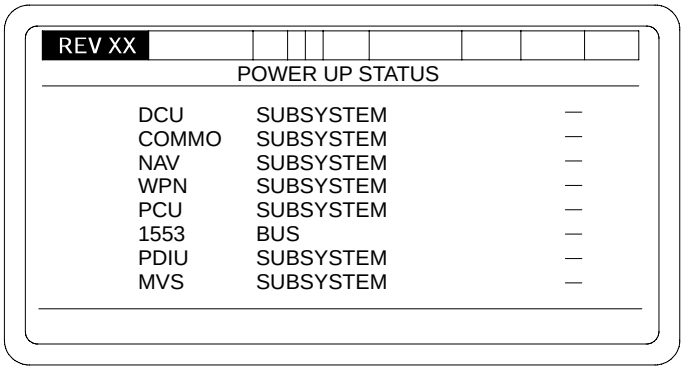


06pc071m

In the event of a failure during POWER UP STATUS, the message, DEGRADED-ACK TO CONTINUE, will be displayed on the bottom line of the EL Panel. To continue, depress soft key under ACK. After the self-test is complete, SELECT OPERATIONAL MODE menu is displayed.

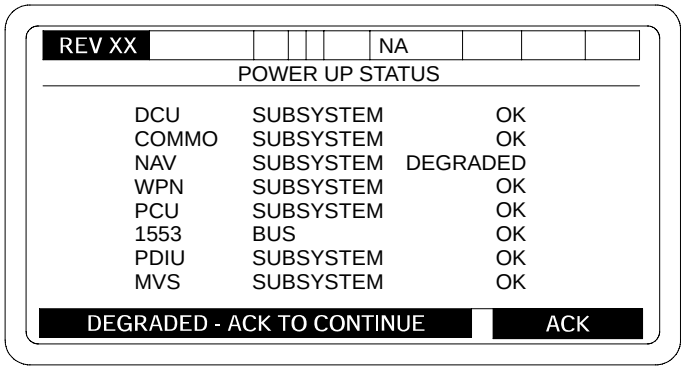


06pc074m

**NOTE**

If DCU contains an incorrect configuration, the AFCS will not allow the operator to select normal operations until a correct DCU software configuration is downloaded.

## 2-12 AFCS INITIALIZATION - CONTINUED

### 2-12.3 Initialization After an Orderly Shutdown - Continued

When configuration verification checking indicates that an invalid howitzer software configuration is present, a short error message “INVALID SOFTWARE CONFIGURATION” “ACK” will appear on the soft key label line of the DU.

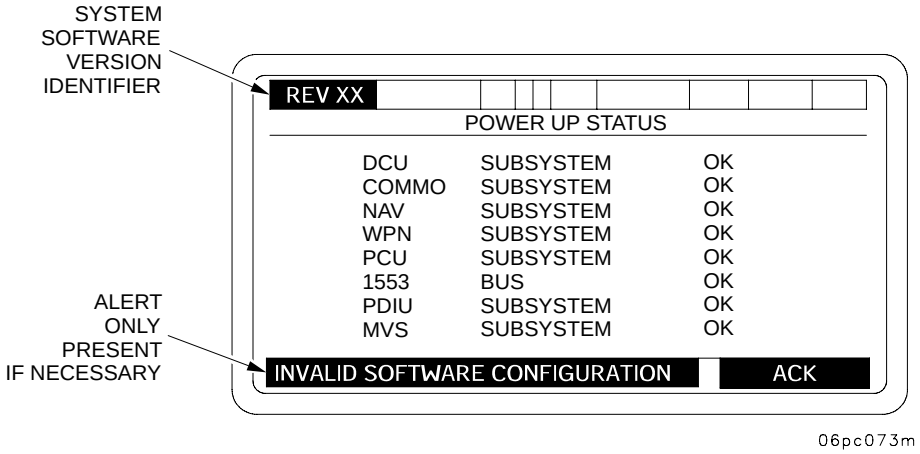


*Discuss Boresight entry requirements during initial POWER-UP and DU FAULT LAMPS

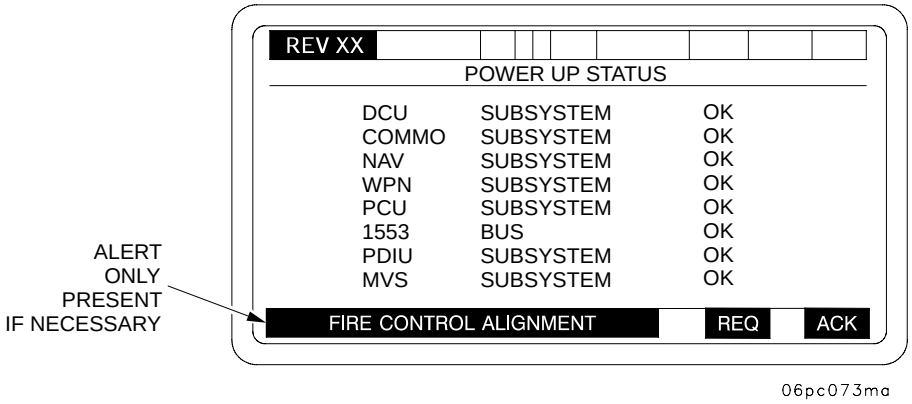


When the message is acknowledged, the AFCS will proceed to the “SELECT OPERATIONAL MODE” menu. To view detailed software configuration information for each LRU, MAINTENANCE should be selected, IAW procedure in para 3-5.1.

(6) Operational Mode Selection Menu.

This menu allows selection of the primary operating mode for the AFCS.

The selection structure shows the prompting for Embedded Training selection. Note that the TRAINING selection and the associated prompting will not be available if the Embedded Training Controller fails power-up BIT.

## 2-12 AFCS INITIALIZATION - CONTINUED

### 2-12.3 Initialization After an Orderly Shutdown - Continued

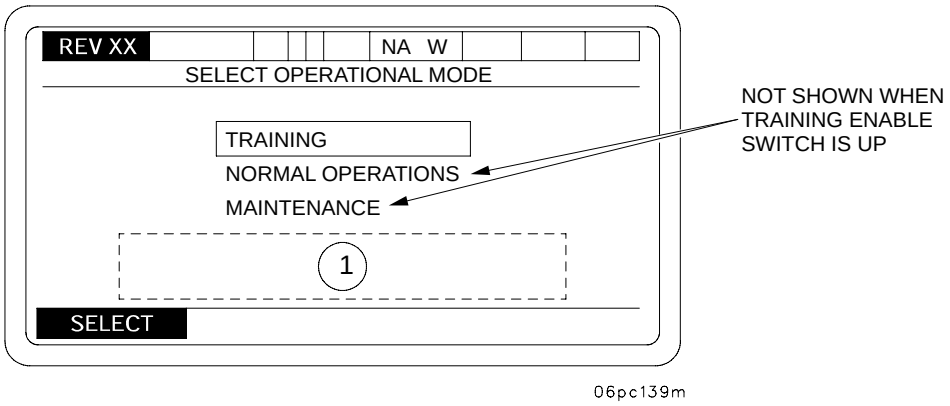


1 - WHEN TRAINING SWITCH IS UP:

**POSITION TRAINING ENABLE SWITCH DOWN**

**TO SELECT OTHER MODES**

- WHEN TRAINING SWITCH IS DOWN:

**POSITION TRAINING ENABLE SWITCH UP**

**TO SELECT TRAINING MODE**

b. Initialization. Select NORMAL OPERATIONS on the SELECT OPERATIONAL MODE menu and press SELECT soft key. A NET ACCESS menu will be displayed.

(1) NET ACCESS - Check data on the NET ACCESS menu for correctness against current data from POC/BCS and press USE ALL. This will cause a NET ADDRESS menu to be displayed.

Using the NET ACCESS menu, check that data in the displayed menu shows same data that the unit SOP specifies.

**NOTE**

To ensure efficient set up of the digital net, it is very important that NET ACCESS and NET ADDRESS data be assigned and controlled by POC/BCS. Verify data per local SOP.

(2) NET TYPE - To select the correct NET TYPE for NETWORK PROTOCOL see Table 2-2 for AFCS NETWORK PROTOCOL entries 1 to 21, and Table 2-3 for 188-220A PROTOCOL entries 22 to 52.

## 2-12 AFCS INITIALIZATION - CONTINUED

### 2-12.3 Initialization After an Orderly Shutdown - Continued

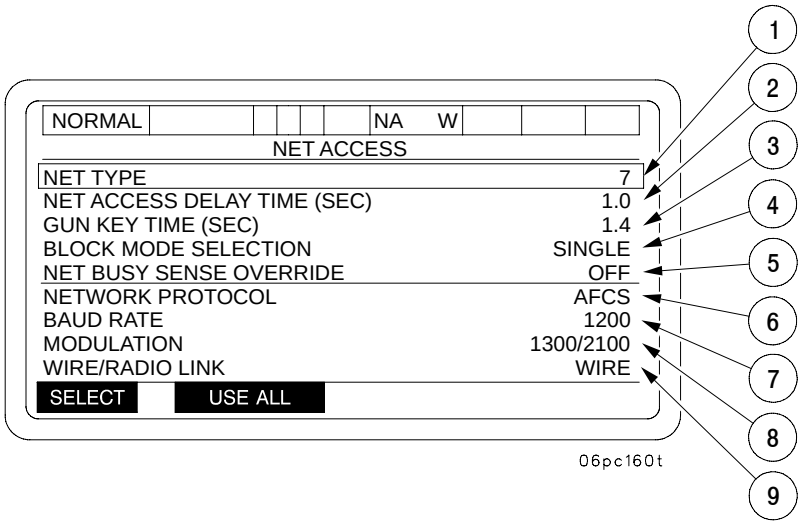


Entries for the NET ACCESS menu are listed below.

1. ENTER NET TYPE. NUMERIC FIELD, RANGE 1. . 52 (DEFINED IN TABLES 2-2 AND 2-3 (SEE (b) BELOW)
2. NUMERIC FIELD, RANGE .5 TO 49.5 SECONDS (SEE (a) BELOW)
3. WHEN SELECTED GUN KEY TIME MENU WILL BE DISPLAYED
4. (SINGLE, DOUBLE) ENTRY
5. (OFF, ON) ENTRY
6. AFCS OR 188-220A BASED ON NET TYPE. NOT SELECTABLE (SEE NOTE (c and d) BELOW)
7. (300, 600, 1200, 2400, 4800, 8000, 16000, 32000) BASED ON NET TYPE. NOT SELECTABLE
8. (NRZ, CDP, 1200/2400, 1300/2100, 1575/2425) BASED ON NET TYPE. NOT SELECTABLE
9. (WIRE RADIO, RADIO/KY-57) BASED ON NET TYPE. NOT SELECTABLE
   WHEN NET TYPE OR NET ACCESS DELAY TIME IS SELECTED (SEE (a and b) BELOW)

USE ALL - The NET ADDRESS (AFCS) menu will be displayed if NETWORK PROTOCAL is AFCS
- The NET ADDRESS menu will be displayed if NETWORK PROTOCAL is 188-220A

(a) When NET ACCESS DELAY TIME (SEC) SELECTED, LINE is overwritten with, “TYPE TIME: .5 TO 49.5 SEC” - PRESS ENT -

(b) When NET TYPE SELECTED, LINE is overwritten with “TYPE NET TYPE: Entries from Tables 2-2 and 2-3” - PRESS ENT -

(c) When NETWORK PROTOCOL is AFCS the menu above will be displayed.

(d) When NETWORK PROTOCOL is 188-220A NET ADDRESS menu will be displayed.

## 2-12 AFCS INITIALIZATION - CONTINUED

### 2-12.3 Initialization After an Orderly Shutdown - Continued

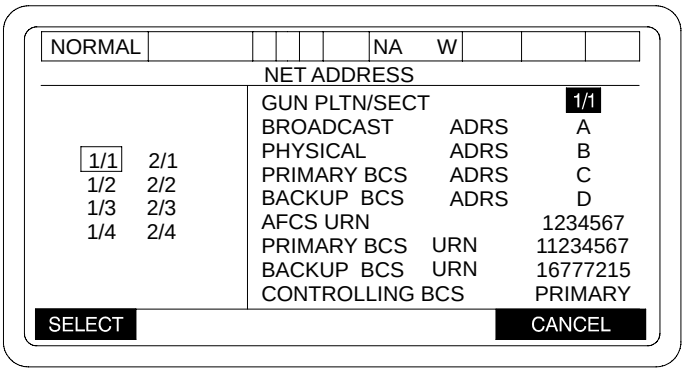


06pc166ta

(2) NET ADDRESS - Check data on the NET ADDRESS menu for correctness against current data from POC and press USE ALL if data is correct. If data is not correct see para 2-12.2c. A SETUP AND INFORMATION menu will be displayed.

(3) SET DATE/TIME - Select SET DATE/TIME on SETUP AND INFORMATION menu and press SELECT to display a SET DATE/TIME GROUP menu.

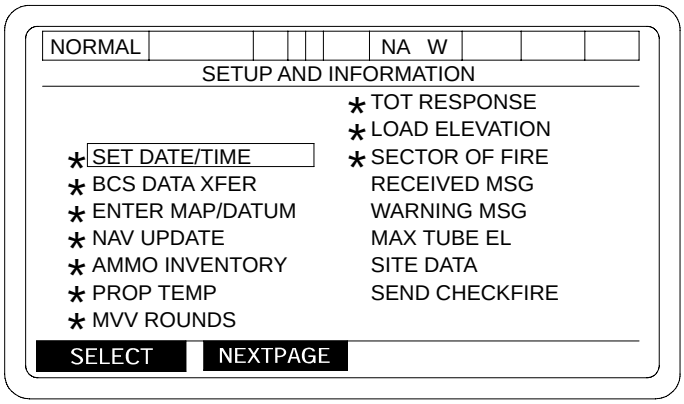


06pc141m

## 2-12 AFCS INITIALIZATION - CONTINUED

### 2-12.3 Initialization After an Orderly Shutdown - Continued

**NOTE**

Use according to unit SOP.

If GPS data is available select “USE GPS”.

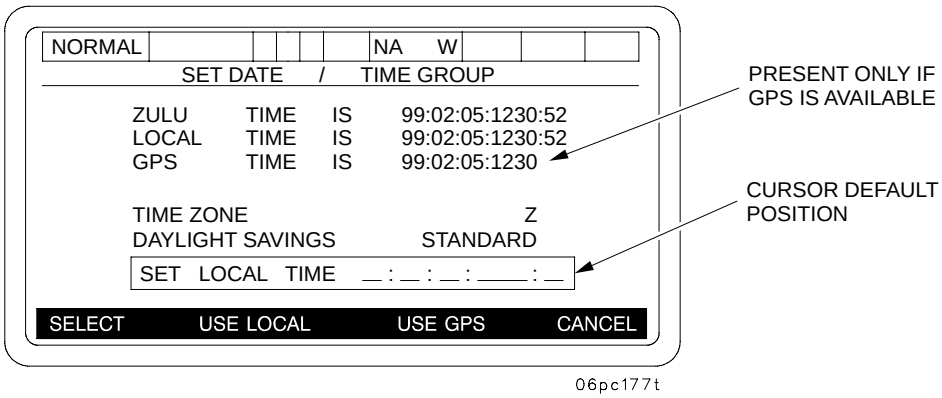


**NOTE**

If GPS is not available or if POC has instructed you not to use GPS time, type in new DTG.

SELECT TIME ZONE - Enter SELECT TIME ZONE in accordance with unit SOP.

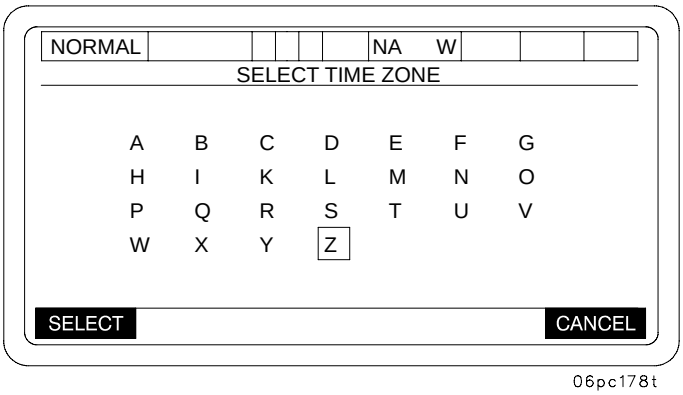


SELECT DAYLIGHT SAVINGS - Enter DAYLIGHT SAVINGS TIME in accordance with unit SOP.

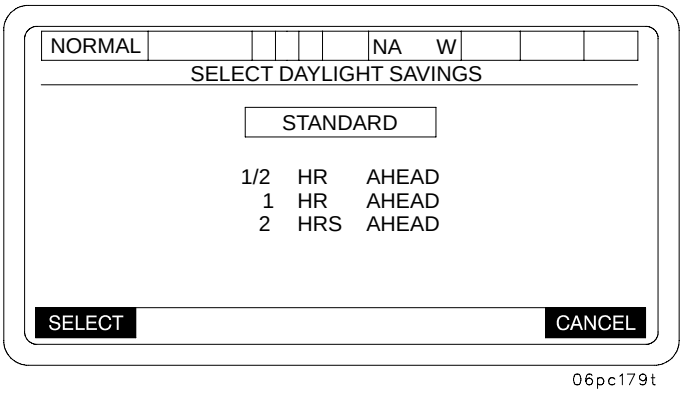

## 2-12 AFCS INITIALIZATION - CONTINUED

### 2-12.3 Initialization After an Orderly Shutdown - Continued

Contact the POC by voice radio to obtain the correct date/time data and a MARK. Type in date/time data (year, month, day, hour, minute) as given by the POC. If the data is entered incorrectly a message will be displayed stating “Invalid DTG Value,” and you will have to re-enter the data. When this is done, another SET DATE/TIME GROUP menu will be displayed.

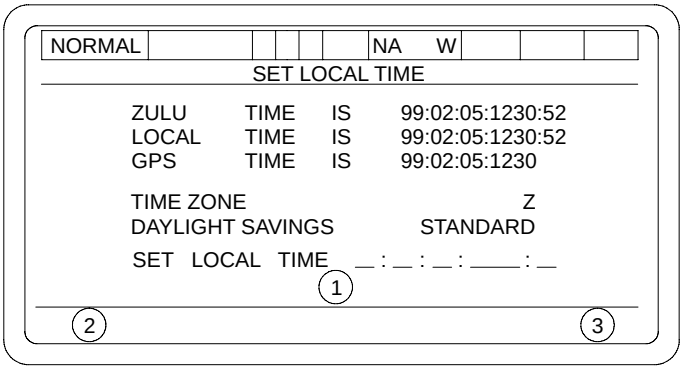


06pc180ta

When the BCS operator gives a countdown and announces MARK, press MARK. The AFCS and BCS time should now be synchronized. A SETUP AND INFORMATION menu is then displayed on the DU.

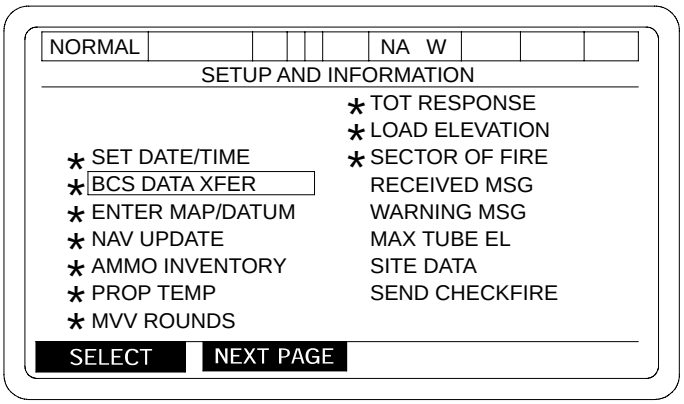


06pc141ma

**NOTE**

The BCS DATA TRANSFER must be done each time you initialize the AFCS, if the POC/BCS is operational.

(4) BCS DATA TRANSFER - To obtain current initialization data (current MET, registration data, etc.), select BCS DATA XFER on SETUP AND INFORMATION menu. Press SELECT soft key to display a BCS DATA TRANSFER menu.

## 2-12 AFCS INITIALIZATION - CONTINUED

### 2-12.3 Initialization After an Orderly Shutdown - Continued

The INITIALIZATION menu item will be automatically boxed and the operator will be prompted to press “YES” or “NO”. Pressing “YES” will cause a message to be sent to BCS requesting initialization data. If you know that BCS is not operational, pressing “NO” will clear the * from BCS DATA XFER on the SETUP AND INFORMATION menu.

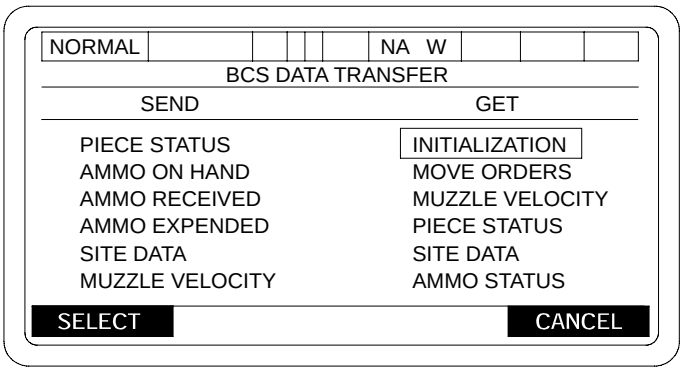


06pc143m

(5) ENTER MAP/DATUM - The BCS DATA XFER, INITIALIZATION data includes a MAP MOD and SPHEROID, but does not transfer the necessary map DATUM. To input the correct DATUM, box in the “ENTER MAP/DATUM” and press the SELECT key. This brings up the MAP/DATUM entry menu.

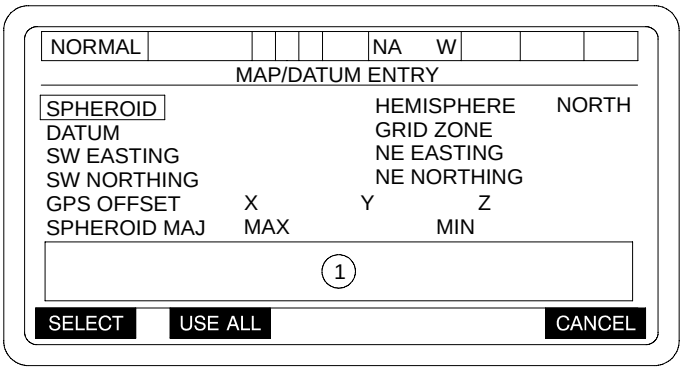


06pc181ta

Check to see that all the data is correct. If it is correct, press the USE ALL key, and proceed with the initialization. If an entry is not correct, select that field and make corrections.

When SPHEROID is selected:

SPHEROID selected will define DATUMs available.
Type 1-5, 8-14:
Press ENT key.

When SW EASTING is selected:

EASTING value of SW Corner of Howitzer Operational Area.
Type 0 to 999999:
Press ENT key.

## 2-12 AFCS INITIALIZATION - CONTINUED

### 2-12.3 Initialization After an Orderly Shutdown - Continued

When SW NORTHING is selected:

NORTHING value of SW Corner of Howitzer Operational Area.
Type 0 to 11000000:
Press ENT key.

When HEMISPHERE is selected:

Select NORTH for above the Equator, SOUTH for below.
CHANGE HEMISPHERE YES NO
Press YES or NO key.

When GRID ZONE is selected:

UTM GRID ZONE of Howitzer Operational Area.
Type 0 to 60:
Press ENT key.

When NE EASTING is selected:

EASTING value of NE Corner of Howitzer Operational Area.
Type 0 to 999999:
Press ENT key.

When NE NORTHING is selected:

NORTHING value of NE Corner of Howitzer Operational Area.
Type 1 to 11000000:
Press ENT key.

When DATUM is selected, SELECT DATUM menu is displayed:

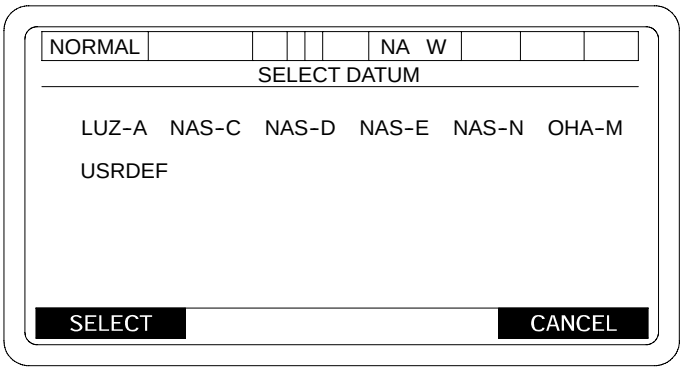


06pc112m

Box in the correct DATUM and press the SELECT key. The DATUMs available are dependent on the SPHEROID selected. See Table Appendix J AFCS/BCS DATUM AND SPHEROID for SPHEROID/DATUM combinations.

## 2-12 AFCS INITIALIZATION - CONTINUED

### 2-12.3 Initialization After an Orderly Shutdown - Continued

**NOTE**

The reference frame for UTM position coordinates is a DATUM. Typically, a Local DATUM is defined by an ellipisoidal earth model (SPHEROID) and a starting point (origin) for the coordinate system. Coordinates on a map or in a Trig list (SCPs) often are on a Local DATUM. An example of a Local DATUM is the North American 1927 (NAD 27) DATUM used in the United States. There have been many different Local DATUMs developed. GPS computes position on the World Geodetic System 1984 (WGS 84), a worldwide coordinate system. To use GPS with coordinates on a Local DATUM, the coordinates must be mathematically shifted. The AFCS (DRUH and PLGR) can automatically perform DATUM shifting, but first the operator must select the Local DATUM to be used, or provide the appropriate shift parameters. For AFCS operation, Local DATUMs are represented by two sets of parameters: The Local Ellipsoid (SPHEROID) and shift parameters as defined for each Local DATUM (DATUM IDs). The BCS can provide the SPHEROID via the MAP MOD. But the BCS can not provide the Local DATUM. Therefore the operator must enter it. The SPHEROID selected will determine which DATUM IDs will be available for selection. The AFCS/BCS SPHEROID and DATUM TABLE provides the SPHEROID number for the AFCS and BCS, which DATUM IDs that are available for that SPHEROID number and the normal coverage area. Note that there may be more than one DATUM ID associated with a Local DATUM because the shifts vary by locality. For other DATUMs or areas outside the indicated coverage area, User Defined (USDDEF) Datum shifts may be entered manually. The table is not intended as an absolute. A map sheet will identify the DATUM name, Ellipsoid (SPHEROID) name and the coordinate type, or the map sheet will identify the area. The data from a Trig list should identify the same information. These parameters must be correlated to the DATUM ID. If the applicable DATUM ID hasn't been programmed in the AFCS, shift parameters for many other DATUMs and regions have been published in DMA TR 8350.2 and may be entered thru the GPS X, Y and Z offsets. Note that the AFCS can not accept shift parameters for all Datums because its SPHEROID capability is limited to these listed in the AFCS.BCS Table.

## 2-12 AFCS INITIALIZATION - CONTINUED

### 2-12.3 Initialization After an Orderly Shutdown - Continued

If the DATUM USR DEF is selected, then the GPS X, Y and Z offsets must be entered. These values must be obtained from the POC and should only be used with guidance from Battery Commander. The ENTER USER DATUM PARAMETERS page should look like:

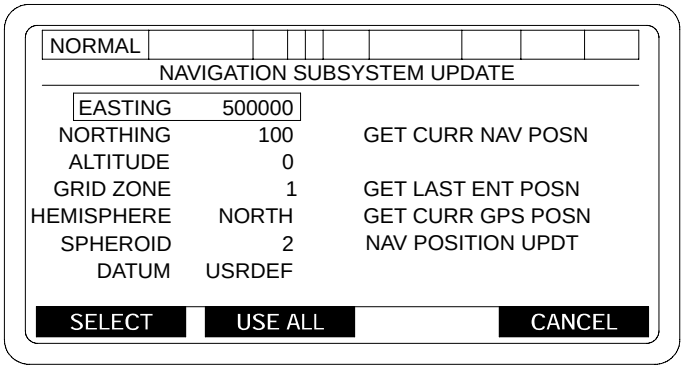


06pc144m

When GPS OFFSET is selected:

Type -2000.0 TO +2000.0:
Press ENT key.

When GPS OFFSET Y is selected:

Type -2000.0 TO +2000.0:
Press ENT key.

When GPS OFFSET Z is selected:

Type -2000.0 TO +2000.0:
Press ENT key.

After all the correct data has been entered, press the USE ALL key to clear and return to the main menu.

(6) NAVIGATION UPDATE - Select NAV UPDATE and press SELECT soft key to display a NAVIGATION SUBSYSTEM UPDATE menu.

**NOTE**

- If vehicle has not been moved since orderly shutdown, the Navigation Subsystem will initiate a Stored Heading Align, which will be completed in about 90 seconds.
- If vehicle has been moved since orderly shutdown, move vehicle to a survey point and enter survey data.

## 2-12 AFCS INITIALIZATION - CONTINUED

### 2-12.3 Initialization After an Orderly Shutdown - Continued

Check data for correctness. If correct, press USE ALL soft key. The prompt, NAV POSITION UPDATE TO START, ARE YOU SURE (YES OR NO), will be displayed. Make proper selection. Press the YES key to RESTART the Navigation Subsystem and display the SETUP AND INFORMATION menu.

Press the NO key to redisplay Navigation Subsystem Update menu. Make corrections or press CANCEL to display SET UP AND INFORMATION menu.

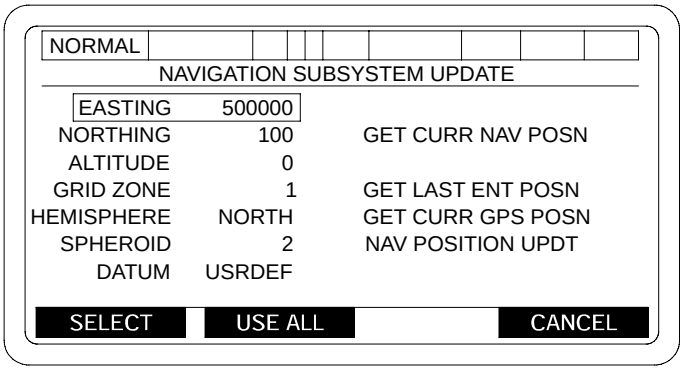


06pc144m

(7) AMMO INVENTORY - Select AMMO INVENTORY on the SETUP AND INFORMATION menu. Press SELECT soft key to display INVENTORY MANAGEMENT menu.

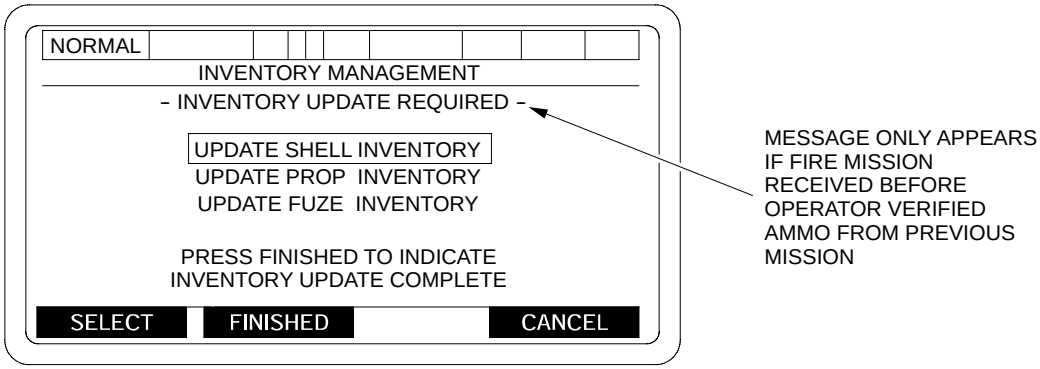


06pc145m

**NOTE**

If a fire mission is activated while in any of the ammunition inventory sub-menus, all valid complete entries shall be saved.

If the ammunition inventory is current, press FINISHED soft key to display the SETUP AND INFORMATION menu. If ammunition inventory is not current, to enter ammunition data, refer to para 2-12.2.

## 2-12 AFCS INITIALIZATION - CONTINUED

### 2-12.3 Initialization After an Orderly Shutdown - Continued

(8) PROPELLANT TEMPERATURE - Select PROP TEMP on SETUP AND INFORMATION menu. Press SELECT key to display a PROPELLANT TEMPERATURE menu.

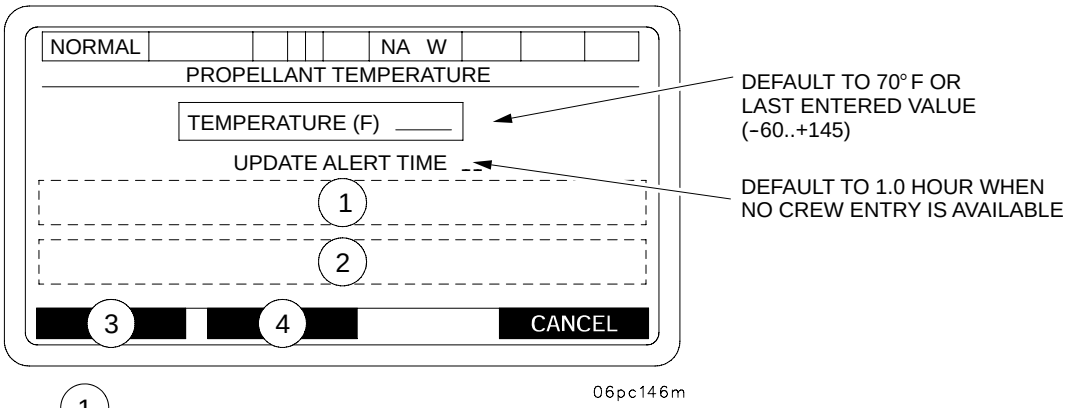


1 TIME TO GO XX:XX (HOURS:MINUTES) OR TIME EXCEEDED

2 WHEN TEMPERATURE SELECTED
TYPE TEMPERATURE IN FAHRENHEIT
DEGREES -60 TO +145
- PRESS ENT KEY -

WHEN UPDATE ALERT TIME SELECTED
TYPE UPDATE TIME IN 0.5 HOUR
INCREMENTS 0.5 TO 2.0
- PRESS ENT KEY -

3 BLANK - WHEN TEMPERATURE OR UPDATE ALERT TIME SELECTED
SELECT - WHEN ITEM IS NOT SELECTED

4 USE ALL - WHEN NO ITEM IS SELECTED
+/- WHEN TEMPERATURE IS SELECTED
BLANK - WHEN UPDATE ALERT TIME IS SELECTED

(9) MUZZLE VELOCITY VARIANCE (MVV) - To set the MINIMUM number of rounds that will be used in calculating muzzle velocity variances, select the MVV ROUNDS from the SETUP AND INFORMATION screen.

NOTE: 1. The entry field will display the current MVV rounds selected and will default to 4 on systems initialization.
2. To use the MVV, you must have an extended lot code in the AFCS inventory.

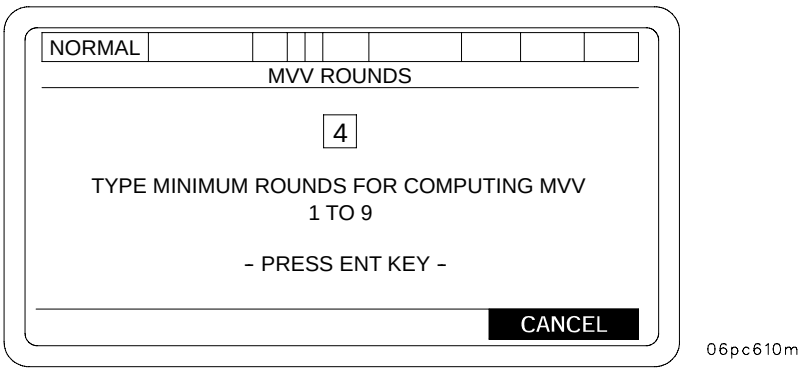

## 2-12 AFCS INITIALIZATION - CONTINUED

### 2-12.3 Initialization After an Orderly Shutdown - Continued

If displayed temperature and update alert time are correct, press USE ALL key. If another temperature or alert time entry is necessary, box the desired item and press SELECT key. Type in new temperature or alert time and press ENT key. When entries are correct, press USE ALL key. The SETUP AND INFORMATION menu will be displayed.

(10) TOT RESPONSE - To access the TOT RESPONSE menu, press NEXT PAGE key to display next page of SETUP AND INFORMATION menu.

Select TOT RESPONSE and press SELECT to display a TOT RESPONSE menu.

Type in desired time to be used and press ENT key. The SETUP AND INFORMATION menu will be displayed.

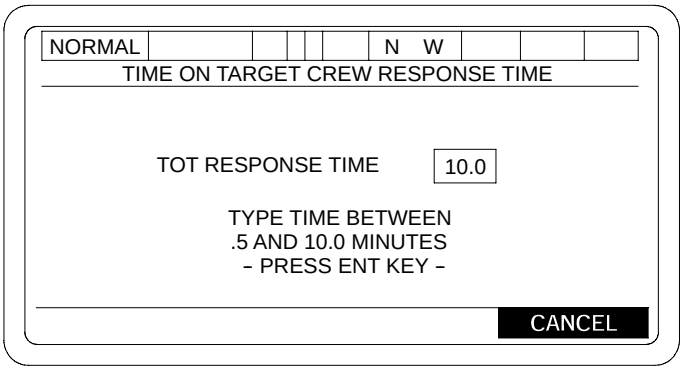


06pc135m

(11) Select LOAD ELEVATION on the SETUP AND INFORMATION menu. Press SELECT key to display a TUBE LOAD ELEVATION menu.

**CAUTION**

Do not enter an elevation greater than 300 mils. Settings above 300 mils may result in breech failing to close and could cause unnecessary wear on spring pack.

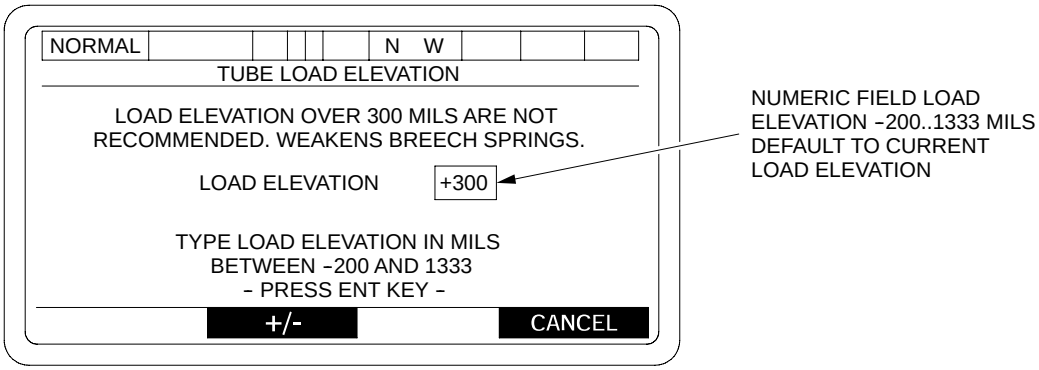


hipc4047

If load elevation shown is the desired elevation, press ENT key. If a new elevation is desired, type in desired elevation and then press ENT key. The SETUP AND INFORMATION menu will be displayed.

## 2-12 AFCS INITIALIZATION - CONTINUED

### 2-12.3 Initialization After an Orderly Shutdown - Continued

(12) Select SECTOR OF FIRE on SETUP AND INFORMATION menu. Press SELECT soft key to display a DEFINE SECTOR OF FIRE menu.

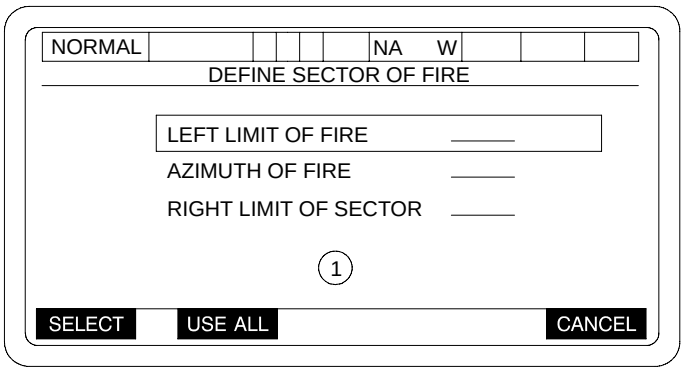


06pc205ta

If data displayed on menu is desired sector of fire, press USE ALL soft key. If a change is needed, select area to be changed, type in change and press ENT key. Repeat for additional changes, when complete press USE ALL soft key. A POS UPDATE or NAV RESTART must be performed if the changes are to be used by the AFCS.

(13) SECTION IN ORDER - When navigation alignment time has been completed, or message OK TO MOVE OR SHOOT ACK has been acknowledged, a CANCEL prompt will appear on the SETUP AND INFORMATION menu. Press CANCEL to display the SECTION IN ORDER AT INITIALIZATION POINT screen.

The AFCS system is now initialized and can perform missions as directed.

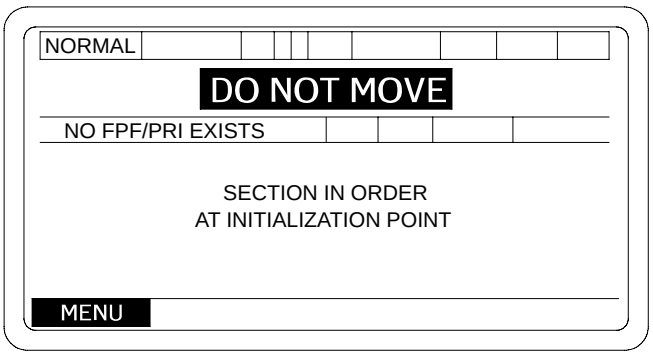


06pc148m

## 2-12 AFCS INITIALIZATION - CONTINUED

### 2-12.4 Initialization After a Catastrophic Failure.

a. If a catastrophic failure (e.g., sudden loss of power of PCU) occurs, it is possible that no data at all will be saved by the AFCS. In this case, a step-by-step-system initialization must be done.

**NOTE**

- Position data must be recorded prior to pressing ARRIVED key during emplacement. If time permits the crew should also set out collimator or select a DAP and set 3200 Deflection on the PANTEL on Center of Sector (Base Azimuth).
- To be able to react quickly to re-initialize a failed AFCS, a Platoon SOP voice request procedure from crew to POC to send all required data messages from BCS may be helpful. Data that would be useful from BCS are: INITIALIZATION (Subscriber File, Map Mode, MET, Registration), MUZZLE VELOCITY, Current Position (to include Sector of Fire) and Propellant Temp (PIECE STATUS), SITE STATUS, and AMMO STATUS.

b. Getting Data. To return to Section in Order as fast as possible after a catastrophic failure of the AFCS, return the tube to travel lock before shutting AFCS power off. Wait about 5 seconds, then turn AFCS power on. Begin the Initialization process as normal, working off the * menu items on the SETUP AND INFORMATION menus. If BCS has current data, get as much data as you can from BCS. This data can be obtained as follows:

(1) Box BCS DATA XFER on the SETUP AND INFORMATION menu and press SELECT key. The INITIALIZATION item under the GET column will be boxed as usual. Press YES to transmit the request for INITIALIZATION data (Subscriber File, Map Mode, MET and Registration).

(2) Next, box MUZZLE VELOCITY under the GET column and press SELECT key. Press YES key to transmit the request to BCS.

**NOTE**

The AFCS automatically uses the Muzzle Velocity data sent by BCS. No further action is necessary by the crew.

(3) Repeat the last step for PIECE STATUS, SITE STATUS, and AMMO STATUS.

(4) Once all requests have been sent, press CANCEL key to move to the next initialization step on the SETUP AND INFORMATION menu.

## 2-12 AFCS INITIALIZATION - CONTINUED

### 2-12.4 Initialization After a Catastrophic Failure - Continued

c. Nav Update.

(1) Use your current position data that you recorded upon emplacement.

(2) If POC has a current location where the failure occurred, use that data for navigation initialization. To use position data obtained from BCS in the step above, box NAV UPDATE on the SETUP AND INFORMATION menu, press SELECT key and a NAV SUBSYSTEM UPDATE menu will be displayed. Box GET BCS PRPT POSN and press SELECT key. Press USE ALL key, and AFCS will use the BCS reported position data and return to the SETUP AND INFORMATION menu.

(3) Another howitzer with an operational DRUH and AFCS can pull into failed howitzer's position (left hub to left hub) and provide navigation data to be entered on the keyboard.

**NOTE**

If no BCS-provided Move Order is expected after AFCS initialization, then the Sectors of Fire must be changed to those provided by the BCS prior to the failure. Sector of Fire entries must be completed prior to inputing a manual Move Order.

(4) The failed howitzer can be taken to a surveyed point and navigation initialized from survey data.

d. Ammo Inventory. To use ammunition inventory data obtained from BCS in the step above, box AMMO INVENTORY on the SETUP AND INFORMATION menu, press SELECT key and INVENTORY MANAGEMENT menu will be displayed. Box EDIT BCS PROVIDED and press SELECT key. When the FINISHED key is pressed the ammunition inventory shall be reviewed to insure each group of projectiles has at least one propellant and each group of propellants has at least one projectile. If a projectile is found without a propellant or a propellant without a projectile, AFCS will display PROJECTILE/PROPELLANT MISMATCH menu. Pressing the CONTINUE Softkey on this menu will return operator to the INVENTORY MANAGEMENT menu, at which time the operator has to update SHELL/PROP inventory. On the next INVENTORY MANAGEMENT menu, press FINISHED to accept the BCS PROVIDED data. If you want to check the ammo inventory for accuracy, then box and select UPDATE SHELL, UPDATE PROP, and UPDATE FUZE one at a time (para 2-12.2 (5)).

e. Site Definition. To use Site data obtained from BCS in the step above, box SITE DATA on the SETUP AND INFORMATION menu, press SELECT key and SITE DEFINITION menu will be displayed. Box GET BCS SITE and press SELECT key (This option will only be available if the POC has sent an AFU mask to the AFCS). Press USE ALL, and the BCS provided Site Data will be used by the AFCS.

## 2-13 AFCS TRAVEL MODE.

During the travel mode the navigation system provides a continuous position data display to the operator. The data displayed on the EL Panel will show UTM coordinates for both position and destination. Also included is a graphic display showing where the vehicle is traveling in relation to destination. After alignment, the AFCS will automatically go into travel mode when the howitzer starts to move.

### 2-13.1 Movement.

Once the howitzer has been initialized and the navigation system has had time to align, a CANCEL SOFTKEY will appear on the main menu. To view a SECTION IN ORDER AT INITIALIZATION POINT screen, press the CANCEL SOFTKEY

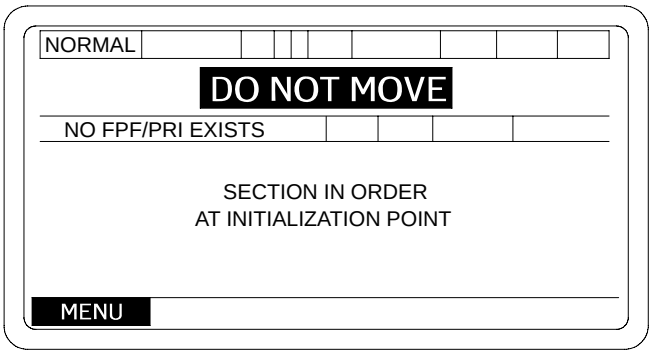


06pc148m

**NOTE**

- DO NOT MOVE the howitzer until you see OK TO MOVE OR SHOOT, ACK message.
- You may then move the howitzer or accept fire missions, but you can expect ZUPT requests during moves if the ALN_ _ _S is still counting down.

2-13.1.1 Move Order. Upon receipt of a Move Order, an audio alert will sound and an OPERATOR ALERT and a STEERTO/EMPLACEMENT screen will automatically appear if the system display was at a SECTION IN ORDER screen. If the SET UP AND INFORMATION screen is displayed a MOVE ORDER alert will appear in field 3 of the screen, and an OPERATOR ALERT, “MOVE MISSION”, “ACK”, will be displayed and the CANCEL soft key must be pressed to display the STEERTO/EMPLACEMENT screen. Once the vehicle has moved about 25 meters an audible and soft key alert “PRESS ACK WHEN TUBE STOWED, ACK” will be displayed. Acknowledge the tube is stowed and press “ACK” soft key.

# 2-13 AFCS TRAVEL MODE - CONTINUED

## 2-13.1 Movement - Continued

STEERTO display screens:

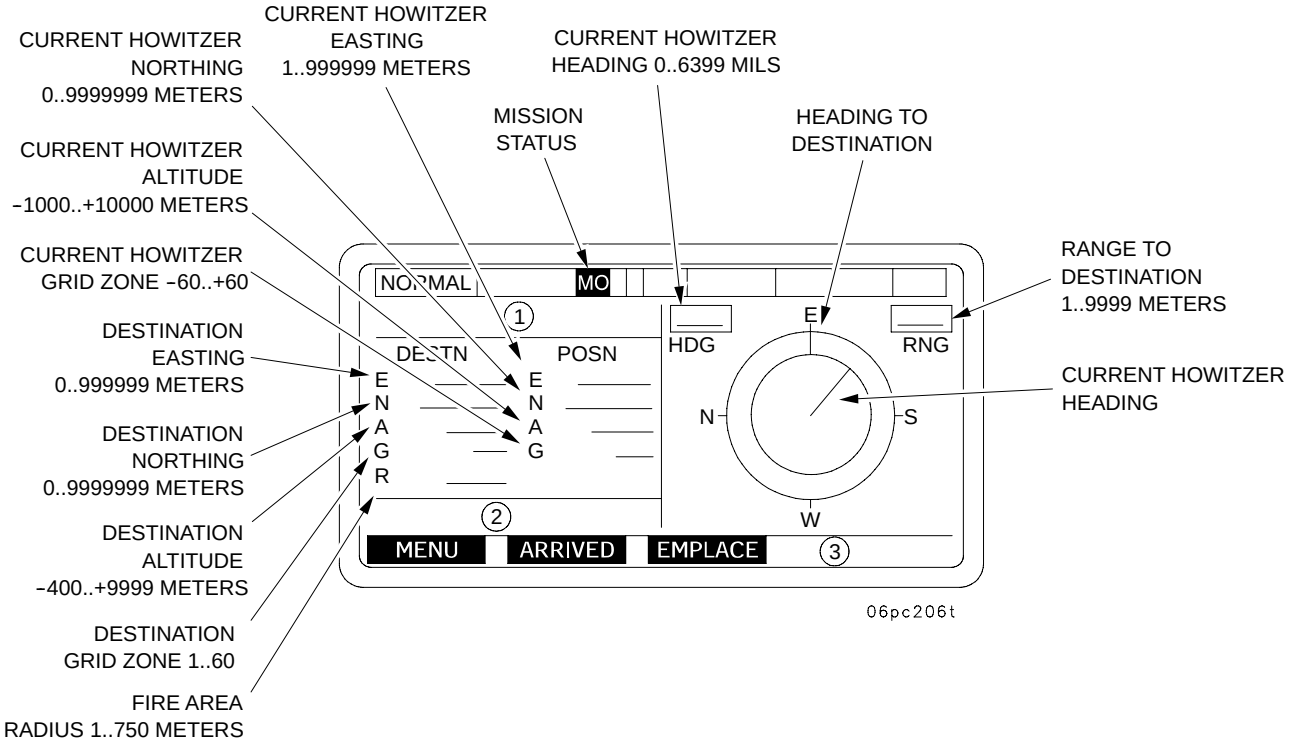


(1) "STEERTO FIRE AREA" - Destination is Fire Area

"STEERTO INIT POINT" - Destination is Initialization point

"STEERTO LOG POINT" - Destination is Logistics Point

"STEERTO FIRE POINT" - Destination is Fire Point

(2) "ORDERED MOVE IN PROGRESS"

"STOP MOVING AND WAIT"

"MOVE IN PROGRESS"

"NO AUTHORITY OR ORDERS TO MOVE"

"AWAITING START OF ORDERED MOVE"

"DO NOT START ORDERED MOVE"

(3) "ZUPT REQUIRED"

"NAV POS UPDATE REQUIRED"

## 2-13 AFCS TRAVEL MODE - CONTINUED

### 2-13.1 Movement - Continued

The STEER TO FIRE AREA screen contains the following:

a. MO - Describes Move Order status.

b. Deleted.

c. DESTN - Indicates destination coordinates: (E) Easting, (N) Northing, (A) Altitude, (G) Grid Zone, (R) Radius of operating area,

d. POSN - Indicates present howitzer position: (E) Easting, (N) Northing, (A) Altitude, (G) Grid Zone.

e. HDG - Howitzer's numerical heading in Mils (Azimuth).

f. RNG - Range to destination in radial distance.

g. Graphic Display - N, E, S, W on outer circle, indicates North, East, South and West and rotates like a compass. The line running from the center of display to edge of the inner circle indicates present vehicle heading. The line between the inner and outer circle indicates the desired heading. When these two lines are aligned, the vehicle is traveling toward destination.

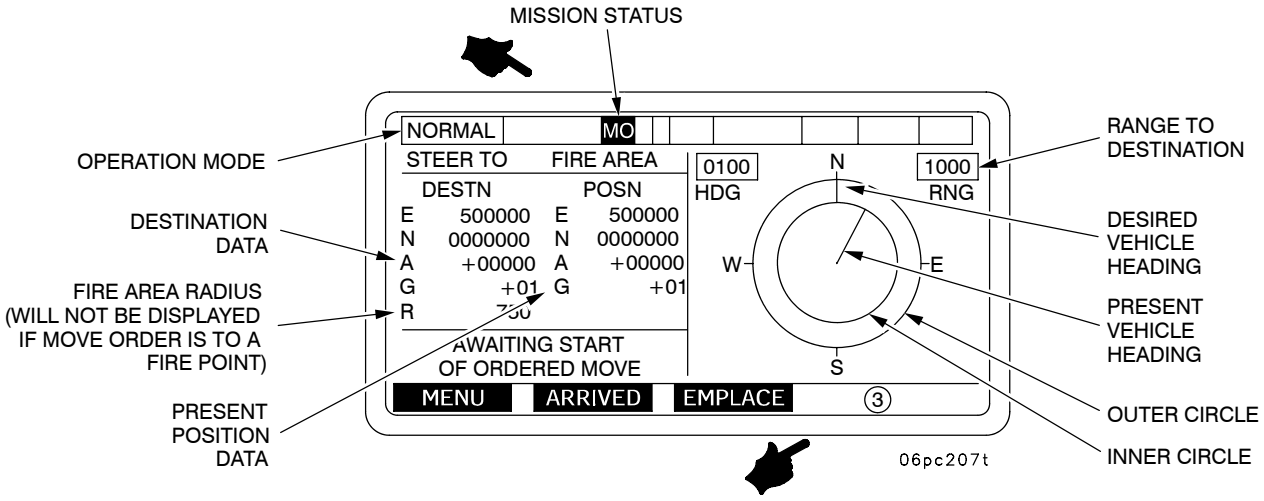

## 2-13 AFCS TRAVEL MODE - CONTINUED

### 2-13.1 Movement - Continued

2-13.1.2 Moving. During movement of the howitzer, the STEER TO FIRE AREA screen will assist the operator in locating his destination. While the howitzer is on the move, the following will occur:

a. The graphic portion of the display will indicate the howitzer's movement by the outer circle of the display moving according to the vehicle heading. The line from center of the display to the inner circle will move as the howitzer changes directions.

b. The alphanumeric portion of the display under POSN will provide the operator with his current position constantly. The display above HDG will change as the howitzer changes headings and the display above RNG will change to indicate whether the movement is away from destination (increase) or toward destination (decrease).

c. Navigation system update may occur (zero velocity update) to maintain location accuracy.

2-13.1.3 Zero Velocity Updates. "Periodic Zero Velocity Updates (ZUPT) may be required if the VMS fails or is out, and the GPS is not valid. ZUPTs are required to increase the accuracy of the Navigation Subsystem. To insure proper Navigation Subsystem Operation and to maintain system performance accuracies, ALL Requested ZUPTs must be honored." When an update is required, the AFCS will notify the operator with an audible alert and "ZPT" will appear in Field 6 and a soft key alert "ZUPT REQUIRED", "ACK". To accomplish a ZUPT, perform the following steps:

a. Stop the vehicle as soon as possible after the alert (the less time traveled between each ZUPT, the better the system accuracy).

b. Press ACK key to acknowledge operator alert.

c. Remain stopped until ZUPT is complete. ZUPT is done automatically during this period.

When the ZUPT is complete, another operator alert will be displayed, "ZUPT NO LONGER REQUIRED", "ACK". "ZPT" is no longer displayed in status line. Press ACK key, then vehicle movement can be continued.

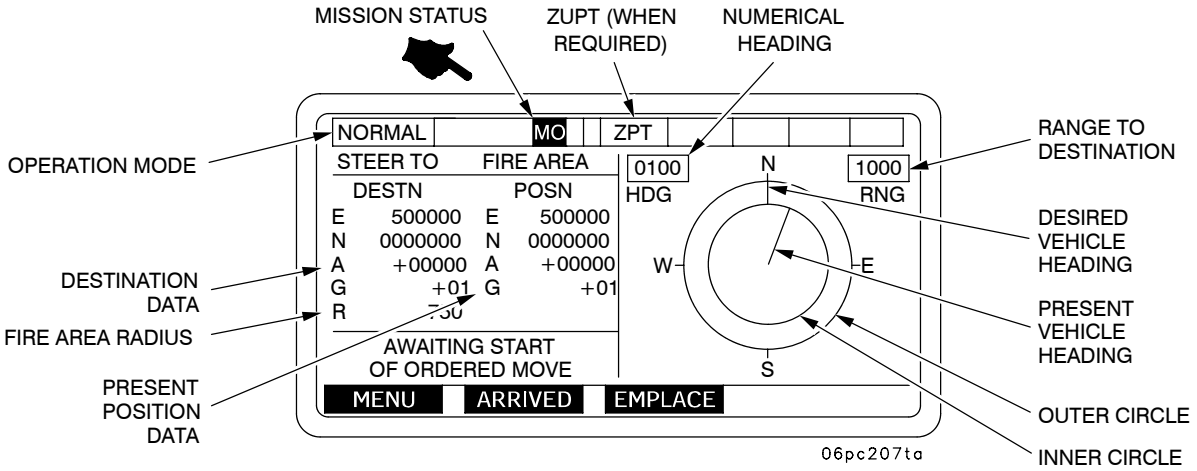

## 2-13 AFCS TRAVEL MODE - CONTINUED

### 2-13.1 Movement - Continued

2-13.1.4 Moving with Navigation System Degraded. If a navigation system failure occurs while the howitzer is moving, the operator will be alerted visually with a NAVIGATE ON YOUR OWN TO DESTINATION display. The chief of section must use established navigation procedures to reach the destination shown. If only the PLGR is operational there will be no HDG information on the display.

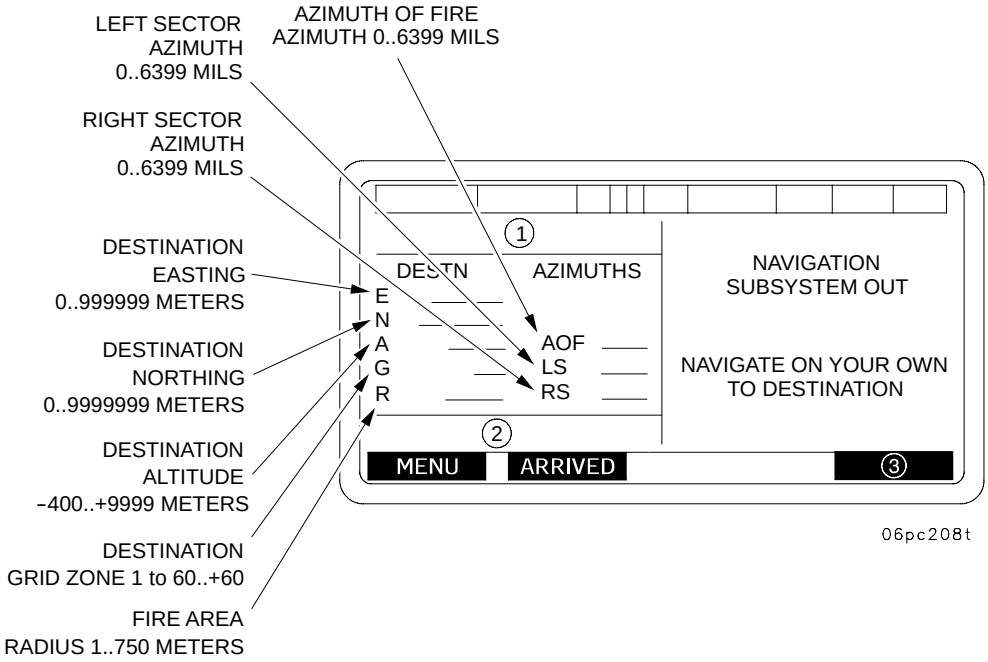


(1) "DEGRADED FIRE AREA" - Destination Is Fire Area

"DEGRADED INIT POINT" - Destination Is Initialization Point

"DEGRADED LOG POINT" - Destination Is Logistics Point

"DEGRADED FIRE POINT" - Destination Is Fire Point

(2) "ORDERED MOVE N PROGRESS"

"STOP MOVING AND WAIT"

"MOVE IN PROGRESS"

"NO AUTHORITY OR ORDERS TO MOVE"

"AWAITING START OF ORDERED MOVE"

"DO NOT START ORDERED MOVE"

(3) "MOVING" soft key only appears when the Navigation System is DEGRADED. Press "MOVING" soft key after vehicle starts moving. Press "ARRIVED" key when vehicle has arrived at destination.

## 2-13 AFCS TRAVEL MODE - CONTINUED

### 2-13.2 Emplacement Fire Point/Fire Area.

When the howitzer enters the radius the AFCS will display the Emplacement at a FIRING AREA/POINT screen depending on type of MOVE ORDER received.

The EMPLACE FIRE POINT screen is also used for DESTINATION TYPES, INITIALIZATION POINT and LOGISTICS POINT emplacement.

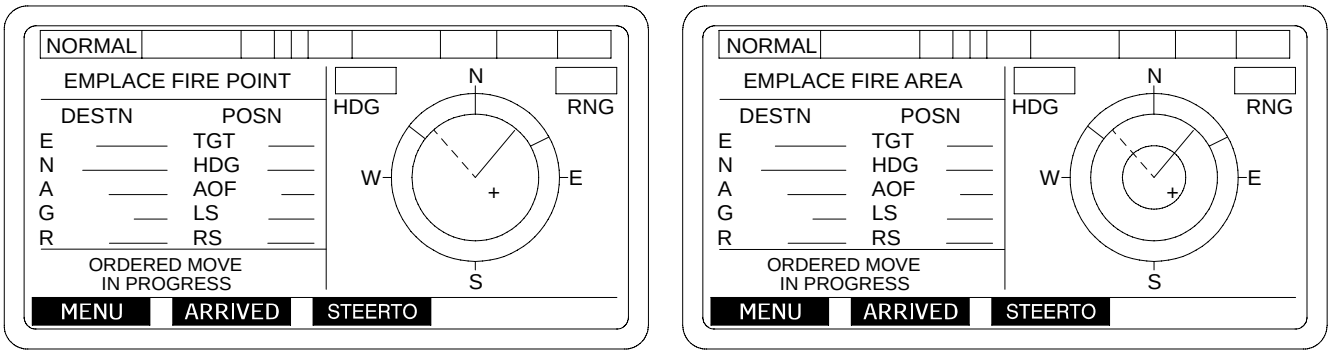


06pc209ta

EMPLACE FIRE AREA Screen - The data on the EMPLACE FIRE AREA screen is the same as the STEER TO FIRE AREA screen with the following exceptions:

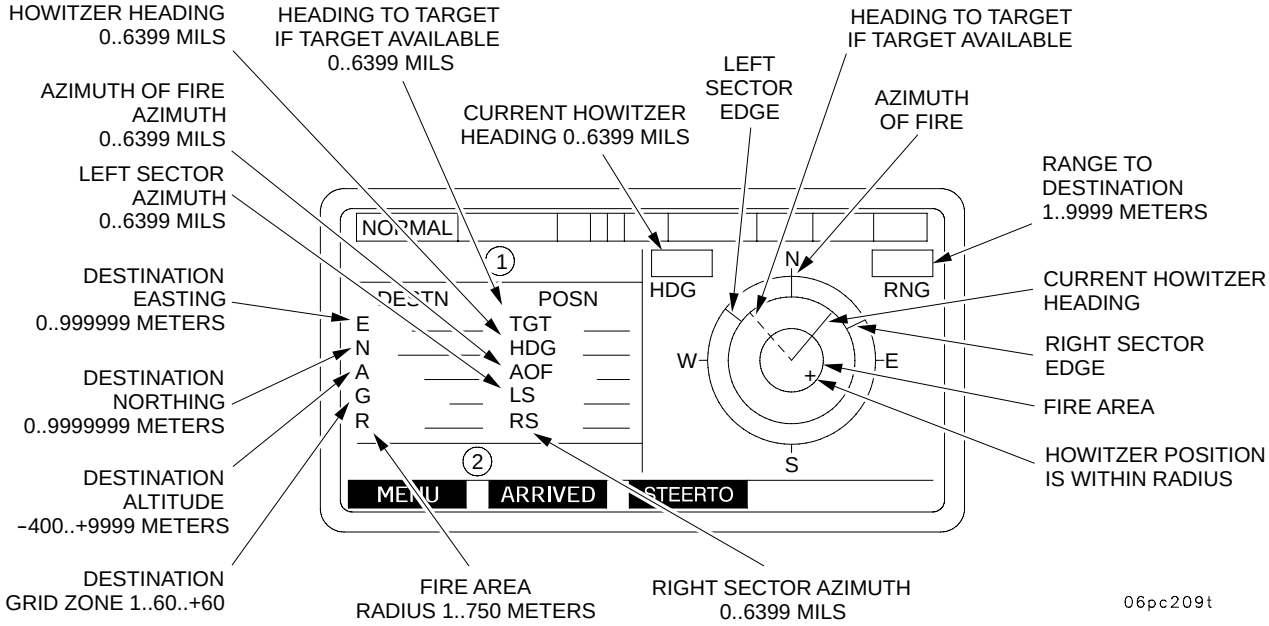


06pc209t

(1) "EMPLACE FIRE AREA" - Destination Is Fire Area

"EMPLACE INIT POINT" - Destination Is Initialization Point

"EMPLACE LOG POINT" - Destination Is Logistics Point

"EMPLACE FIRE POINT" - Destination Is Fire Point

(2) "ORDERED MOVE IN PROGRESS"

"STOP MOVING AND WAIT"

## 2-13 AFCS TRAVEL MODE - CONTINUED

### 2-13.2 Emplacement Fire Point/Fire Area - Continued

a. Plus Sign - Represents the vehicle. When the vehicle is within the allowable move area assigned by the Platoon Operation Center (POC), the "+" will appear on the display. As the vehicle moves, the plus sign will also move, indicating direction of travel.

b. Inner Circle - Represents the Allowable Movement Area and will vary in size. This is determined by the radius of the Fire Area and is assigned by POC with a Move Order. This circle is an Emplacement Aid.

**NOTE**

- If EMPLACEMENT screen was accessed prior to arriving at next firing area the EMPLACEMENT screen may not display automatically.
- Once the vehicle is within the inner circle (shown by the + sign) the CHIEF OF SECTION may choose his emplacement position to take advantage of terrain features.

c. The line running from middle circle to outer circle between N and E represents Right Sector of Fire and the line between N and W represents Left Sector of Fire. The line under N represents Azimuth of Fire. The sector of fire is assigned by POC with the Move Order.

d. Solid Line - Represents the current heading. It extends from the center of the smallest circle to the edge of the middle circle. When this line is aligned with the line under the "N," the vehicle is travelling toward the ordered destination.

e. Dotted Line - Represents the gun-target line to a Final Protective Fire (FPF) target (if stored on AFCS) and is designated by the POC.

f. Destination - Represented by the intersection of the solid line and the dotted line at the center of the smallest circle.

g. Azimuths - Display of azimuths in Mils to TGT (FPF target if one exists), HDG (present howitzer heading), AOF (Azimuth of Fire), LS (Left Sector of Fire), RS (Right Sector of Fire).

## 2-13 AFCS TRAVEL MODE - CONTINUED

### 2-13.2 Emplacement Fire Point/Fire Area - Continued

2-13.2.1 Emplacing. Once the plus sign is within the designated firing area the howitzer has reached it's destination. The howitzer is then maneuvered until vehicle heading (solid line from the center of the smallest circle to the edge of the middle circle) is aligned as closely as possible with the Azimuth of Fire Line (center solid line between the middle and outer circle). When these lines are aligned, the howitzer is roughly laid on the Azimuth of LAY.

**NOTE**

- DRUH position data improves approximately 30 seconds after the howitzer is stopped. The chief of section has the option of awaiting this time and then pressing the ARRIVED soft key to achieve optimum positioning data. However, this option should not be considered during an emergency fire mission. (EMERGENCY MISSION)
- Before pressing ARRIVED key you must record your position data and Azimuth of Fire (Base Azimuth) in case the AFCS fails.
- If cab-side VMS modem is disconnected and position data is not available from the PLGR, the DRUH position data will degrade even though the howitzer is not moving. This data may degrade to the point where the navigation subsystem will be declared out.
- The soft key under ARRIVED on the MOVE ORDER screen must be pressed before the gun tube is unstowed from travel lock. This action establishes the TUBE STOW (travel lock) position. Pressing the STOW key will move the tube back to this azimuth.
- If EMPLACEMENT screen was accessed prior to arriving at next firing area the EMPLACEMENT screen may not display automatically.
- Once the vehicle is within the inner circle (shown by the + sign) the CHIEF OF SECTION may choose his emplacement position to take advantage of terrain features.

## 2-13 AFCS TRAVEL MODE - CONTINUED

### 2-13.2 Emplacement Fire Point/Fire Area - Continued

- When emplacing the howitzer, the Azimuth of Fire (Azimuth of LAY) from the Move Order is the azimuth the AFCS holds as the “Base Azimuth” (the 3200 deflection reference position). This is the azimuth used by the AFCS to compute ballistic data, and is also sent to the BCS in the PIECE STATUS (HOW: UPDATE) message for ballistic computations at the BCS.

- When emplacing at a FIRING POINT the howitzer range must be 50 meters or less. (Optimum 10 meters or less)

Press the ARRIVED soft key on the EMPLACE FIRE AREA or Fire Point Site Definition screen to display a SITE DEFINITION screen. Take the tube out of travel lock.

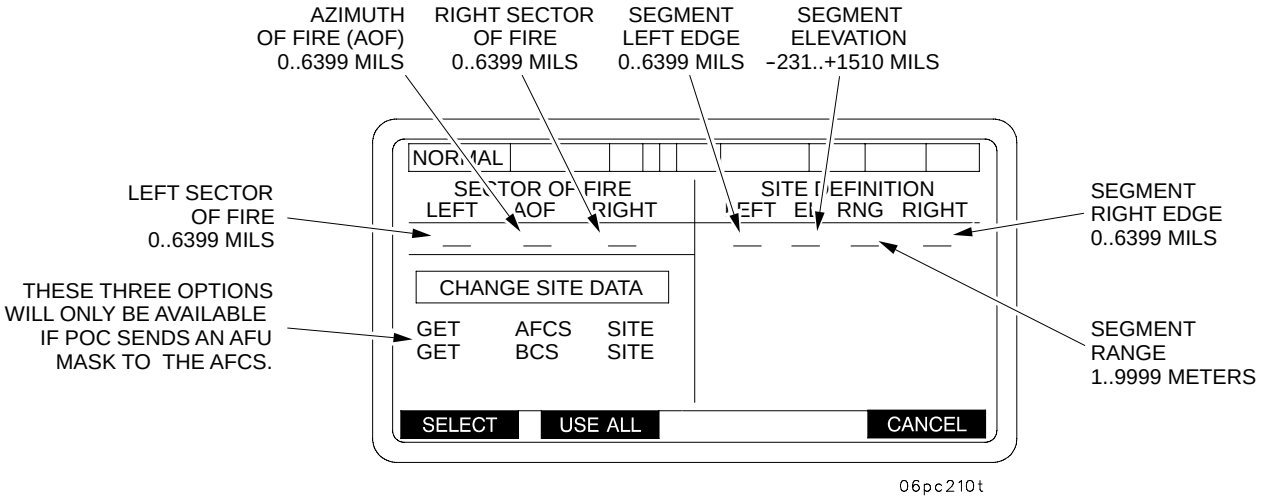


AUTOMATIC SEFLECTION, “BOXING” will occur starting from field LEFT and then continuing from LEFT to RIGHT, to field EL RNG and RIGHT, after each previous entry has been ENTERED.

# 2-13 AFCS TRAVEL MODE - CONTINUED

## 2-13.2 Emplacement Fire Point/Fire Area - Continued

2.13.2.3 SITE DATA Identifies left and right limits, range and elevation in mils, and is used to ensure that all rounds clear crests within the howitzer's SECTOR OF FIRE. Up to eight sets of site definition data can be entered. Site definition data is determined using the same procedures as SITE TO CREST (sighting through the cannon tube). This data is entered using the SITE DEFINITION screen as follows:

a. Obtain SECTOR OF FIRE data from POC. Normally Azimuth of Fire, Left and Right Sector limits will be provided by the POC in the Move Order and will be displayed automatically on the SITE DEFINITION menu on the left side of the screen under LEFT AOF RIGHT headings.

b. Press the DELETE key to remove SITE DATA from previous occupation. Box in limit under column to be changed and press the SELECT key.

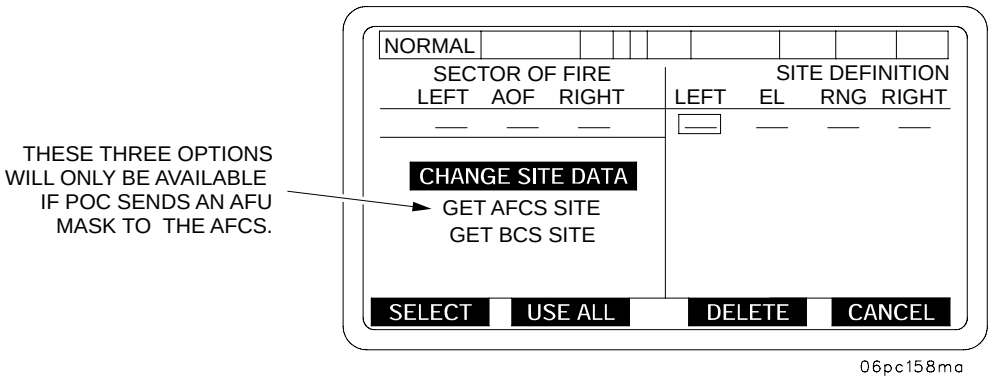


c. One Line SITE DATA (For Initial Occupation). Pressing the ARRIVED key the COS must obtain One Line SITE DATA. AFTER removing the gun tube from the travel lock the COS brings the cursor box to the left limit and presses SELECT, then traverses the gun tube to the left while monitoring the Azimuth readout until he reaches at least one mil beyond the Left limit then press ENTER. While the GUNNER sights through the gun tube the COS elevates or depresses the gun tube to obtain immediate crest. COS brings the cursor box to the Right limit and presses SELECT then COS traverses the gun tube to the Right limit while the GUNNER sights through the gun tube. COS elevates gun tube upon the COMMAND "Elevate" from the GUNNER when the GUNNER needs to clear an obstruction until the COS reaches the Right limit while monitoring the Azimuth readout, then presses ENTER. Before moving the gun tube, COS then cursors to the entry under EL, presses SELECT and ENT to obtain elevation to immediate Crest. COS then cursors to entry under Range, presses SELECT and ENT and inputs RANGE TO CREST from the numeric keypad and presses ENT. Upon completion of One Line SITE DATA the COS then presses USE ALL to input MIN QE.

## 2-13 AFCS TRAVEL MODE - CONTINUED

### 2-13.2 Emplacement Fire Point/Fire Area - Continued

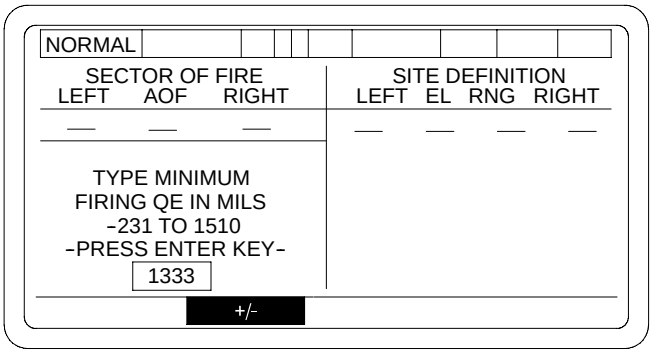


06pc215t

Pressing the ENTER key will display SECTION IN ORDER menu. During NORMAL OPERATIONS the last value entered shall be displayed.

d. MINIMUM QUADRANT ENTRY. Upon completion of One Line SITE DATA, press USE ALL and a display will appear in the left side of the SITE DEFINITION screen. Enter the MIN QE obtained from the POC for the current position. Upon voice verification of the MIN QE with the POC, press the ENT key. This will display the SECTION IN ORDER at FIRING AREA/POINT screen.

e. Send piece status to POC.

**NOTE**

COS will obtain MAX QE and send updated piece status to POC (see para 2-15.7.2.1).

2.13.2.3.1 SITE DEFINITION screen display. With the GUNNER sighting through the tube the COS elevates or depresses the gun tube to obtain immediate Crest. COS traverses right while the GUNNER looks through the gun tube. When an obstruction appears, data for the Left limit SITE DEFINITION can be entered by pressing the ENT key. The SITE DEFINITION screen with Left Azimuth will be displayed. perform steps d and e to establish 6400 mils SITE DEFINITION.

**NOTE**

This procedure is conducted as part of Position Improvement.

## 2-13 AFCS TRAVEL MODE - CONTINUED

### 2-13.2 Emplacement Fire Point/Fire Area - Continued

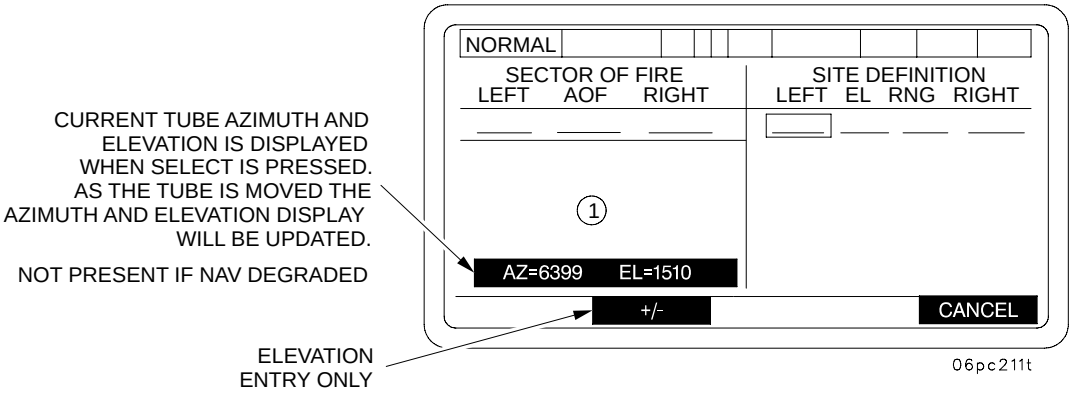


(1) THE FOLLOWING PROMPTS ARE DISPLAYED DEPENDING ON WHICH FIELD IS SELECTED:

| | |
|---|---|
| **WHEN "LEFT" IS SELECTED**<br>MOVE TUBE OR TYPE<br>LEFT EDGE OF SITE<br>IN MILS:<br>0000 TO 6399<br>-PRESS ENT KEY- | **WHEN "EL" IS SELECTED**<br>MOVE TUBE OR TYPE<br>ELEVATION OF SITE<br>IN MILS:<br>-231 TO 1510<br>-PRESS ENT KEY- |
| **WHEN "RNG" IS SELECTED**<br>TYPE RANGE TO SITE<br>IN METERS:<br>0001 TO 9999<br>-PRESS ENT KEY- | **WHEN "RIGHT" IS SELECTED**<br>MOVE TUBE OR TYPE<br>RIGHT EDGE OF SITE<br>IN MILS:<br>0000 TO 6399<br>-PRESS ENT KEY- |

**NOTE: MASK HEIGHT CANNOT EXCEED 10,000 METERS, THEREFORE:**

(A) UPPER LIMIT ON RANGE WILL CHANGE DEPENDING ON CURRENT MASK ELEVATION

(B) UPPER LIMIT ON ELEVATION WILL CHANGE DEPENDING ON CURRENT MASK RANGE

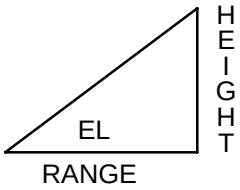


**NOTE: WHEN CURRENT TUBE POSITION IS USED TO SET MASK ELEVATION:** IF THE RANGE FIELD CONTAINS AN ENTRY WHICH RESULTS IN A MASK EXCEEDING 10,000 METERS, THE RANGE FIELD WILL BE RESET TO THE MAXIMUM ALLOWED VALUE AND THE FOLLOWING MESSAGE WILL BE DISPLAYED: **"WARNING - RANGE SET TO MAXIMUM", "ACK"**

AUTOMATIC SELECTION, "BOXING" will occur starting from field LEFT and then continuing from LEFT to RIGHT, to field EL, RNG, and RIGHT, after each previous entry has been ENTERED.

# 2-13 AFCS TRAVEL MODE - CONTINUED

## 2-13.2 Emplacement Fire Point/Fire Area - Continued

**NOTE**

Numerical value must be entered before sign. Default sign is (+).

a. Select next limit column (EL) to display Elevation SITE DEFINITION screen. Enter elevation data in the same manner as left limit (type in data or use gun tube position). If elevation is below zero, press +/- key to place minus sign in front of numbers to be entered (used only when typing in data). Press ENT key.

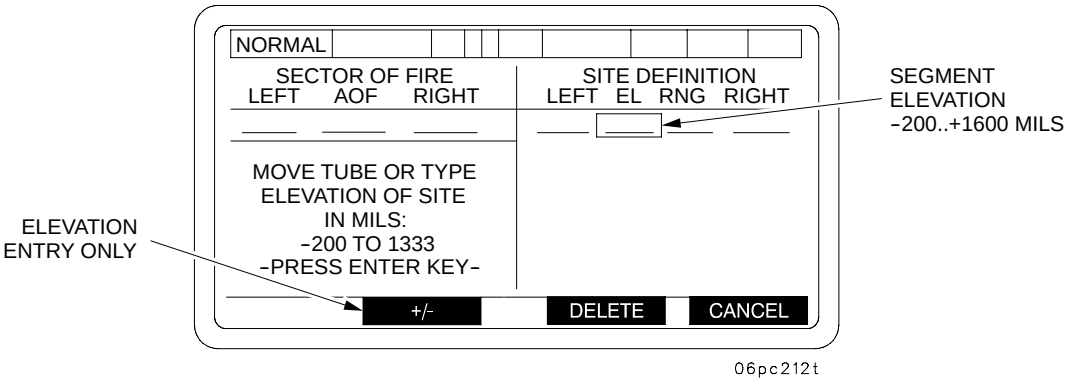


b. Select next limit column (RNG) to display the Range SITE DEFINITION screen. Enter range to crest and press ENT key. (Data for this must be typed in; gun tube position cannot be used.)

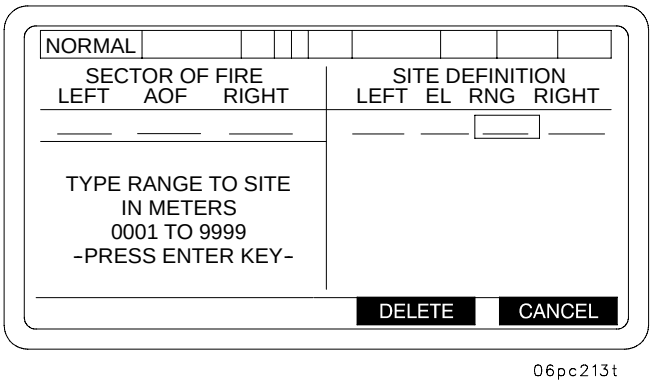

## 2-13 AFCS TRAVEL MODE - CONTINUED

### 2-13.2 Emplacement Fire Point/Fire Area - Continued

c. Select next limit column (RIGHT) to display the right limit SITE DEFINITION screen. Data for this limit can be typed in, or use tube position. Enter data by pressing ENT key.

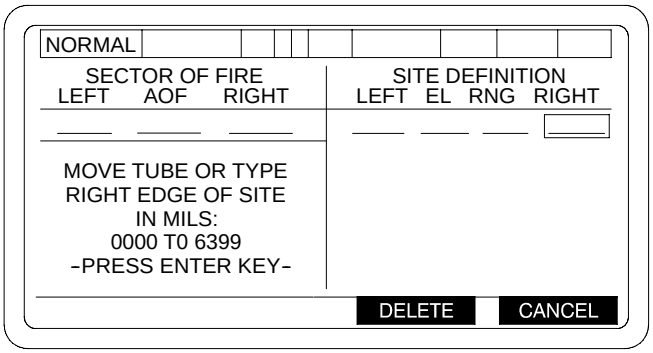


06pc214t

d. Using arrow key, move cursor box to next available line and to the left and identify next obstruction.

e. Sequence can be repeated as many as seven times if needed.

2-13.2.4 SECTION IN ORDER. When all data is correct, press ENTER key. This will bring up a SECTION IN ORDER WITHIN FIRE AREA or SECTION IN ORDER AT FIRE POINT screen depending on whether the Move Order was a move to a FIRE AREA or FIRE POINT. An ordered move of any other type would be indicated as such in field 11 of the menu.

**NOTE**

When SECTION IN ORDER screen is displayed, the commanded deflection (CMD DEFL) may be either: 1) the Azimuth of Fire (Azimuth of LAY) from the Move Order, expressed at 3200 deflection. Since this is also the “Base Azimuth” position (the difference between the 3200 reference and the ordered Azimuth of LAY); or 2) if a Final Protective Fire (FPF) or Priority (PRI) target has been designated by the POC, the CMD DEFL will be the deflection from “Base Azimuth” to the FPF; or 3) when a Manual Move Order has been done, the CMD DEFL is the default Azimuth of Fire (Base Azimuth) entered upon initialization.

# 2-13 AFCS TRAVEL MODE - CONTINUED

## 2-13.2 Emplacement Fire Point/Fire Area - Continued

2-13.2.4 SECTION IN ORDER - Continued

**NOTE**

LOAD/LAY and STOW will not be displayed unless the gun switch is in the ON position.

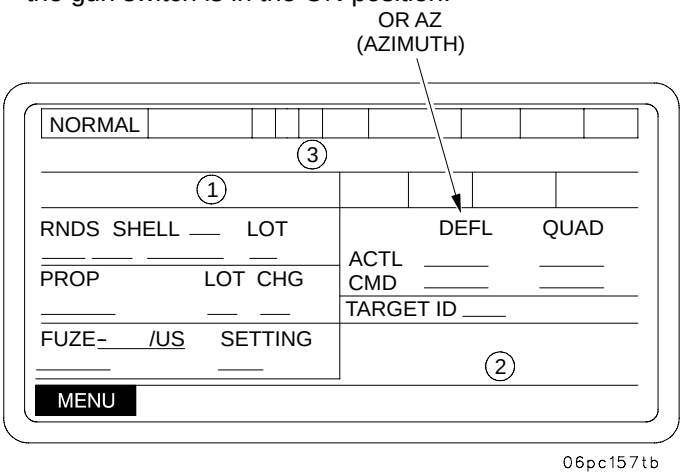


2-13.2.5 Establish Distant Aiming Point or Set Collimator (Optional).

**NOTE**

If time permits, the crew should set out collimator or select a DAP and set the PANTEL with the tube "Base Azimuth". If this is not possible immediately, traverse back to "Base Azimuth" using one of the following procedures based on the conditions indicated on the SECTION IN ORDER screen.

a. Use this procedure when the CMD DEFL reads 3200 deflection and there is no FPF nor PRIORITY (PRI) target displayed on the SECTION IN ORDER screen. Under these conditions, CMD DEFL is using the Azimuth of Fire (Base Azimuth). To move the tube to Base Azimuth, 1) Turn on hydraulic power, 2) Set GUN SERVO switch to ON, and 3) Press/hold the LOAD key until the LOAD indicator is highlighted in the upper right corner of the screen. Tube is now laid on Azimuth of Fire (Base Azimuth) and both the ACTL DEFL and CMD DEFL should read 3200. 4) Sight onto the Collimator or the DAP and set 3200 Deflection on the PANTEL.

## 2-13 AFCS TRAVEL MODE - CONTINUED

### 2-13.2 Emplacement Fire Point/Fire Area - Continued

2-13.2.5 Establish Distant Aiming Point or Set Collimator (Optional) - Continued

b. Use this procedure when the CMD DEFL shows a deflection other than 3200 and there is either an FPF or PRIORITY (PRI) target displayed on the SECTION IN ORDER screen. The CMD DEFL is the Firing Azimuth for the FPF/PRI target, so the LOAD key cannot be used to move the tube to 3200 deflection. Under these conditions, 1) use the Hydraulic Power Handle Controls to traverse the tube until the ACTL DEFL reads 3200 deflection. Tube is now laid on Center of Sector (Base Azimuth). 2) Sight onto the Collimator or the DAP and set 3200 Deflection on the PANTEL.

**NOTE**

If the AFCS fails, use the Azimuth of Fire recorded during emplacement as Azimuth of Lay (Base Azimuth) and use reciprocal lay procedures with the aid of an operational howitzer.

2-13.2.6 Final Laying of Gun Tube at FIRING AREA. It is necessary to lay the gun tube on the Azimuth of Fire (from MOVE ORDER) or the FPF/PRI azimuth/deflection. The SECTION IN ORDER screen will show a difference between the ACTL DEFL and the CMD DEFL. The ACTL and CMD values must be the same for the gun tube to be layed. To accomplish this: 1) set GUN SERVO switch to ON, and 2) depress and hold LOAD key (para 2-11.2). The gun will traverse to the CMD DEFL (match ACTL and CMD) and to the LOAD ELEVATION stored at initialization. When the LOAD indicator is highlighted, release the LOAD key.

## 2-14 AFCS SECTION IN ORDER.

When the AFCS has been properly initialized, the howitzer is then moved to a FIRE AREA. Upon arrival at the FIRE AREA the howitzer is emplaced at a FIRE AREA at which time SITE and MIN QE DATA is entered into the AFCS. Once the data is correctly entered, a SECTION IN ORDER AT FIRE AREA screen is displayed. The howitzer and crew are now ready to receive and carry out a fire mission. If time permits, a DAP is selected and the PANTEL is set for 3200 deflection on the Base Azimuth. For position improvement establish alternate Aiming Points (DAP/Collimater), verify Boresight and enter MAX TUBE EL.

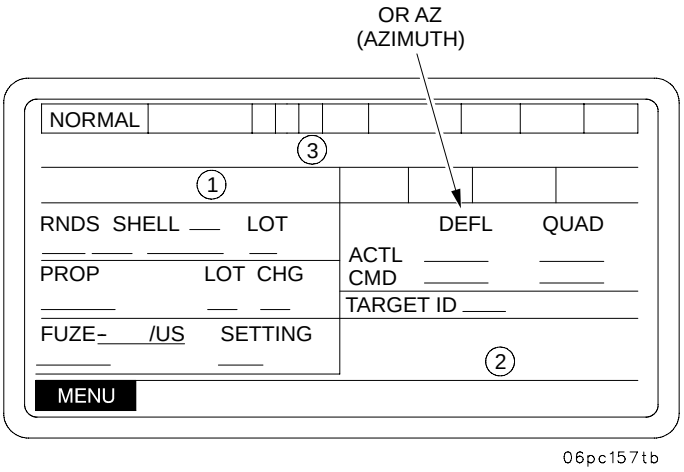

## 2-15 AFCS FIRE MISSION.

Fire missions are usually generated as a result of a message from the BCS to the AFCS. Included in the message are target location, method of control, and ammunition to fire (if ammunition is not specified the AFCS will default to its own selection). When the message is received by the AFCS, a fire mission screen is displayed on the DU and an audible alert is sounded through the intercom system. The Ballistics Computer will then compute the ballistics (azimuth and quadrant), based on ammunition data (projectile, propellant, and fuze), target location and the location of the howitzer (provided by the navigation system). The ballistic solution is then displayed on the fire mission screen.

A typical FIRE MISSION screen contains the following:

**WARNING**

**The crew compartment must be adequately ventilated during all firing using the LEAD FILTER or ventilation system in accordance with para 2-22.2.**

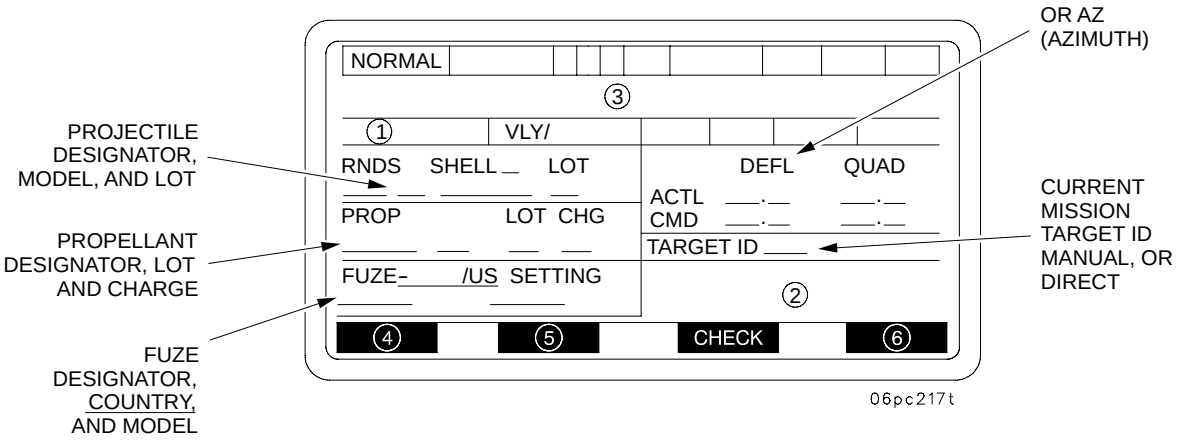


Listed below are the legal values for each field of SD-16A.

VLY / = Current volley being displayed; 1/1, 1/2 or 2/2

**NOTE**

The 1/1, 1/2, and 2/2 data shall not be displayed for operator initiated fire missions and missions that are in fire commands format.

RNDS = Number of rounds remaining to fire 1..9
SHELL = Shell model and mnemonic
SHELL LOT = A..Z
PROP = Propellant model
PROP LOT = A..Z
CHG = Propellant charge designator (see Table 2-1)
FUZE = Fuze model, Country and mnemonic
SETTING = Computed fuze setting, “PD” or “DELAY”
DEFL (or AZ) = 0.0..6399.9 mils
QUAD = -200.00..+1600.0 mils
TARGET ID = Current mission target identification

## 2-15 AFCS FIRE MISSION - CONTINUED

1. Blank = Fire mission is not a sheaf
   SHEAF PT = This gun is participating in a multi-gun sheaf
   SHEAF a/s = This run is conducting a single gun sheaf
   where: a..Current aimpoint number; b..Number of sheaf points

2. Blank - Displayed when none of the following apply
   REMEMBER TO UPDATE INVENTORY = Direct or manual fire mission and none of the following apply
   WARNING TUBE IS NOT IN LAY POSITION = WC is operational and the tube is not in the lay window.
   TUBE MUST BE LAID MANUALLY = WC is not operational
   CALL FDC IF ROUND IN TUBE = Awaiting tube clear and crew not authorized to fire.
   PRESS SHOT OR CLEAR TO ACK CEASELOAD = AFCS has received a ceaseload request.
   Mim QE violated ACK
   SECTOR OF FIRE VIOLATION = Gun-target line is outside the defined sector of fire.
   SITE VIOLATION = Firing parameters violate defined mask.
   INSUFFICIENT AMMO SHELL/FUZE/PROP = Insufficient inventory quantities
   INSUFFICIENT AMMO SHELL/FUZE = Insufficient inventory quantities
   INSUFFICIENT AMMO SHELL/PROP = Insufficient inventory quantities
   INSUFFICIENT AMMO FUZE/PROP = Insufficient inventory quantities
   INSUFFICIENT AMMO SHELL = Insufficient inventory quantities
   INSUFFICIENT AMMO FUZE = Insufficient inventory quantities
   INSUFFICIENT AMMO PROP = Insufficient inventory quantities
   MAX TUBE EL EXCEEDED = Computed QE exceeds the defined maximum tube elevation.
   MINIMUM QE VIOLATED = The Gun Tube has violated the minimum QE as entered by the AFCS operator in the Enter Minimum Firing QE Display.

## 2-15 AFCS FIRE MISSION - CONTINUED

3. FIRE WHEN READY = Fire at will
   UNDER VOICE ORDERS = Manual fire mission
   COMPUTING DO NOT LOAD = AFCS computing or waiting for operator response
   DO NOT LOAD = Do not load missions
   LOAD LAY THEN PRESS READY = At my command or Copperhead mission
   WAIT FOR COMMAND = At my command after ready
   WAIT XXX SECONDS = Time to fire mission or continuous interval mission
   FIRE = COMMAND TO FIRE
   FPF END OF MISSION = EOM or ceaseload during FPF
   EARLY END OF MISSION = EOM received after load but before all rounds fired
   CEASELOAD = Ceaseload received after load but before all rounds fired
4. SHOT = AFCS requires notification of round fired
   READY = AFCS requires notification of operator ready to fire
5. CLEAR = AFCS requires notification of tube clear
   OTHER VLY = Other volley information is available for operator viewing
6. ABORT = Fire mission other than direct or manual active
   EOM = Direct or manual mission active

**NOTE**

Some of the alerts listed in item 2 above will result in an “OK TO SHOOT?, YES, NO” short error message to the AFCS operator.

MINIMUM QE VIOLATED  ACK

The Gun Tube has violated the minimum QE as entered by the AFCS operator in the Enter Minimum Firing QE Display. An audio alert shall sound until the ACK key is pressed.

MINIMUM QE NO LONGER VIOLATED  ACK

The Gun Tube no longer violates the minimum QE as entered by the AFCS operator in the Enter Minimum Firing QE Display. An audio alert shall sound until the ACK key is pressed.

## 2-15 AFCS FIRE MISSION - CONTINUED

**DELETED**

## 2-15 AFCS FIRE MISSION - CONTINUED

Fire Mission Received. When displayed, press ACK to confirm receipt of fire mission.

### 2-15.1 Platoon Operation Center.

Although the howitzer has the ability to compute its own firing data, the actual firing of a mission is controlled by the POC. The control method is included within the fire mission message and displayed on the FIRE MISSION screen. Control methods are as follows:

a. AT MY COMMAND. In this method, the POC controls when the howitzer is fired. (An example is a normal Copperhead mission.) The Method of Control field of the FIRE MISSION screen will tell the COS to LOAD, LAY, then press READY key. When these are accomplished, a message that the howitzer is ready to fire is sent to the POC. When the FIRE COMMAND is issued by the POC, an audible alert and an alternating tone is sounded and a FIRE prompt is displayed. If more than one volley is to be fired, the other volleys will be FIRE WHEN READY.

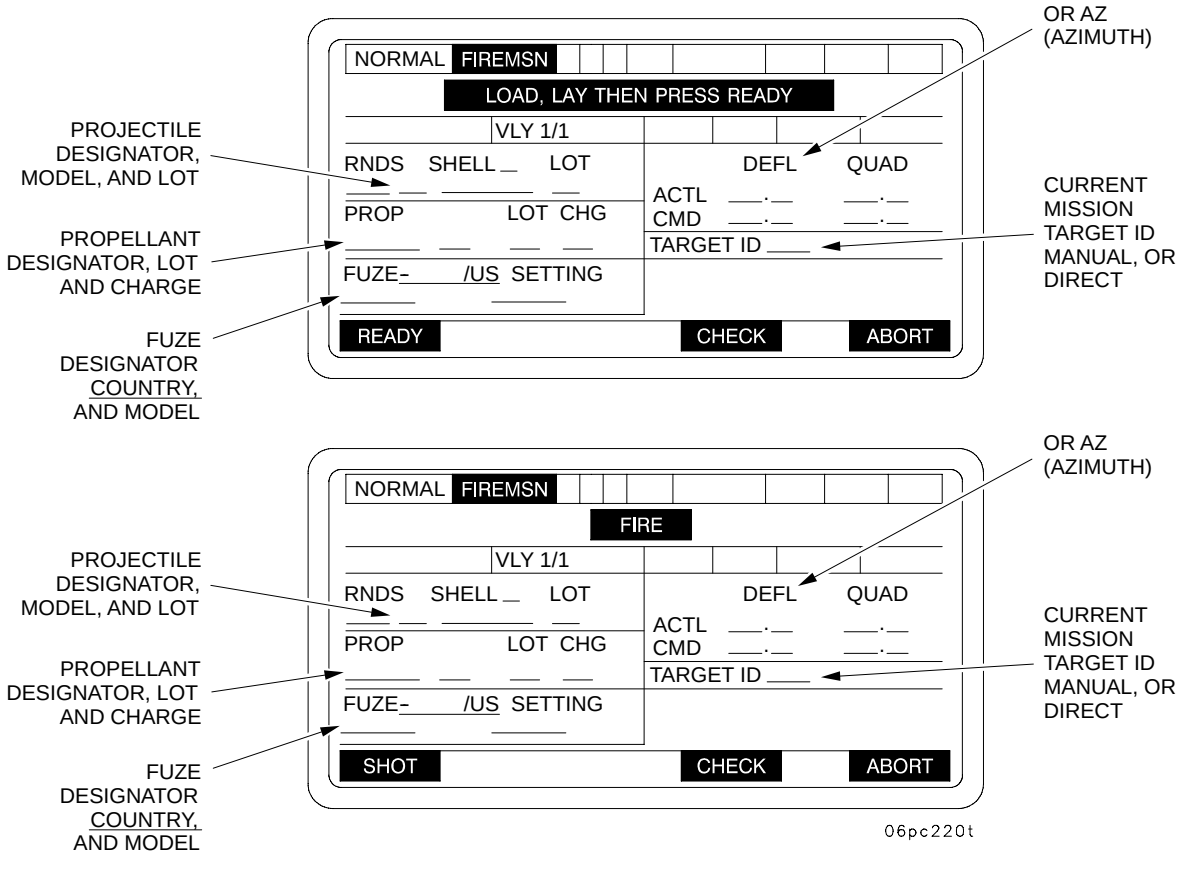

## 2-15 AFCS FIRE MISSION - CONTINUED

b. DO NOT LOAD. This is a restrictive command that prohibits loading and firing. This is used when it is anticipated that significant time will elapse between loading and firing. When the DO NOT LOAD command is canceled, then the FIRE command is issued, and the same audible and visual alerts will be received as in AT MY COMMAND.

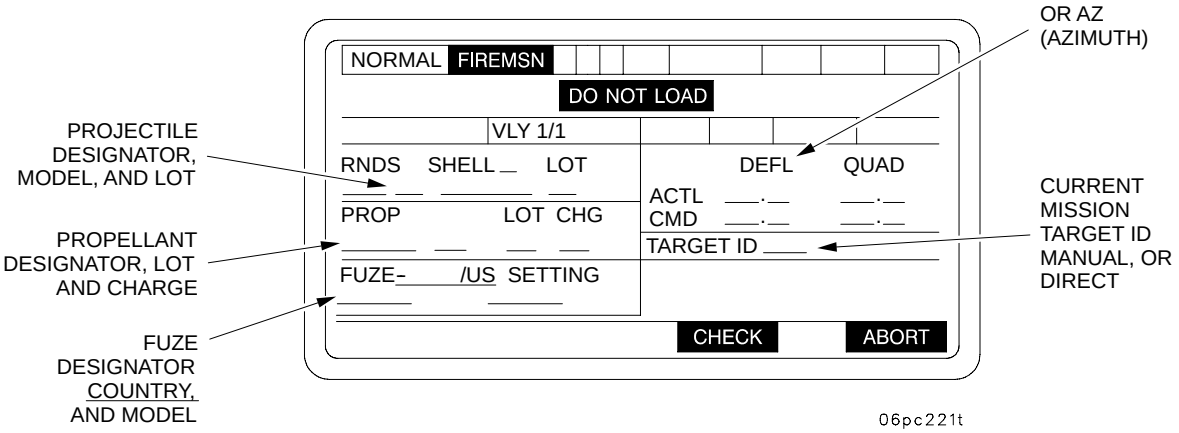


c. TIME TO FIRE (TTF) SEQUENCE. This sequence consists of the following:

(1) Ballistic sequencing is performed. (COMPUTING DO NOT LOAD)

(2) If no ABORT is performed during the ballistic sequencing the AFCS operator is given the data.

(3) The AFCS operator is told to “WAIT FOR XXXX SECONDS” where xxx is the number of seconds remaining until time to fire.

(4) The “WAIT FOR XXX SECONDS” prompt is updated each second.

(5) When the countdown has expired, the AFCS operator is told to “FIRE”.

(6) If this is not a FPF mission, then when the first shot out is detected and there is a Continuous Fire Interval specified processing continues using the Continuous Fire Interval sequence. If there are more rounds to fire, and a Continuous Fire Interval is not specified, the AFCS operator is told to “FIRE WHEN READY” (similar to when ready sequencing subsequent rounds). Otherwise, if shot out is not detected within 20 seconds then the mission is automatically ended.

If this is a FPF mission, then when shot out is detected the AFCS operator is told to “FIRE WHEN READY” again. This is repeated until the mission is ended and no rounds complete is generated.

(7) When rounds complete is detected the mission is automatically ended.

## 2-15 AFCS FIRE MISSION - CONTINUED

d. CONTINUOUS FIRE INTERVAL SEQUENCE. The Continuous Fire Interval sequence shall be as follows for the second and subsequent rounds in a mission where a continuous fire interval is specified.

(1) Following the first round fired using the sequences described above, the operator shall be told to "WAIT FOR XXX SECONDS" where xxx is the number of seconds remaining until time to fire.

(2) The "WAIT FOR XXX SECONDS" prompt shall be updated each second.

(3) When the countdown has expired, the operator is told to "FIRE."

(4) If all rounds in the mission have not been shot, processing will sequence through steps 1, 2, and 3 above.

(5) When rounds complete is detected, the mission is automatically ended.

### 2-15.2 Firing Mission.

**WARNING**

**The crew compartment must be adequately ventilated during all firing using the LEAD FILTER or ventilation system in accordance with para 2-22.2.**

When a fire mission is received, visual as well as an audible alert is given. The visual alerts are FIREMSN in Field 2 and OPERATOR ALERT AND ACK display. The audible alert can be heard by all crewmembers. When a fire mission is in process, each crewmember will perform his portion of the following:

a. GUNNER and CANNONEER stow seats (if not previously stowed).

b. Driver starts engine and/or raises idle speed to 1000-1200 rpm.

c. COS issues the fire order (for example, 1 round HE; charge 4 green bag; Fuze Time, Time 25.0) and activates the HYDRAULIC POWER switch on the hydraulic control box and the GUN SERVO switch on the DU.

c.1 Cannoneer turns LEAD FILTER switch on the Accessory Control Box to ON and moves Vent Duct Control Handle into UP position.

d. GUNNER opens breech (first round only).

e. CANNONEER positions rammer to RAM position.

f. GUNNER prepares propellant (charge/zone taken from bustle stowage).

g. CANNONEER prepares projectile and fuze (sets time on fuze if necessary).

h. COS verifies projectile, fuze, fuze time and propellant and depresses LOAD key on DU (if necessary).

i. When the tube is in the LOAD position, the CANNONEER places the projectile on the ram tray and activates rammer.

j. When the ramming cycle is complete, the CANNONEER places the rammer in the stowed position.

k. GUNNER places propellant in powder chamber and closes breech.

**NOTE**

When the AFCS has laid the gun and the LAY key is highlighted the gun must stay within +/- 0.9 mils of the commanded deflection.

## 2-15 AFCS FIRE MISSION - CONTINUED

### 2-15.2 Firing Mission - Continued

l. The COS presses and holds the LAY key on the DU until the cannon is laid on the COMMAND FIRING Data.

m. COS ensures that the gun is in the LAY position by verifying and announcing LAY light is highlighted (ACTUAL and COMMANDED DEFLECTION) and QUADRANT are within tolerance (+/- 0.9) and the prompt "WARNING TUBE IS NOT IN LAY POSITION)" is no longer displayed).

n. GUNNER verifies LAY data. If data is correct GUNNER will announce "Verified." (If data is incorrect GUNNER will announce "Check firing").

o. COS gives the command to "PRIME."

**NOTE**

During high angle missions or illumination missions, it is recommended prime be done at load elevation.

p. COS commands "Hookup," CANNONEER attaches lanyard to firing block and announces "Hookup."

q. COS announces, "FIRE."

**NOTE**

If the Navigation Subsystem is out, the AFCS will not detect the shot, and COS must press the SHOT soft key after each round.

r. CANNONEER pulls the lanyard to fire the round.

s. The AFCS is capable of automatically detecting Shot. In most cases pressing the SHOT soft key is not required. When a round is fired, the Navigation Subsystem and MVS will detect the round. After the round is fired and detected by the AFCS, the SHOT soft key will automatically disappear for 5 seconds, the Fire Mission will automatically decrement by one round (i.e. rounds to complete mission will decrease by one), and the Ammo Inventory will automatically be adjusted. In the very rare case that the AFCS does not detect shot, the COS must press the SHOT soft key as before.

t. Cannoneer turns on Personnel Fan (Exhaust) switch on the Accessory Control Box and moves the Vent Duct Control Handle into DOWN position. Operate Personnel Fan for 1-2 minutes until all fumes are exhausted.

2-15.2.1 Subsequent Rounds. The first procedure is also used for all subsequent rounds in a fire mission. When all rounds have been fired for the mission, a VERIFY EXPENDED AMMO screen will be displayed. Ammunition accountability is covered in para 2-15.3.

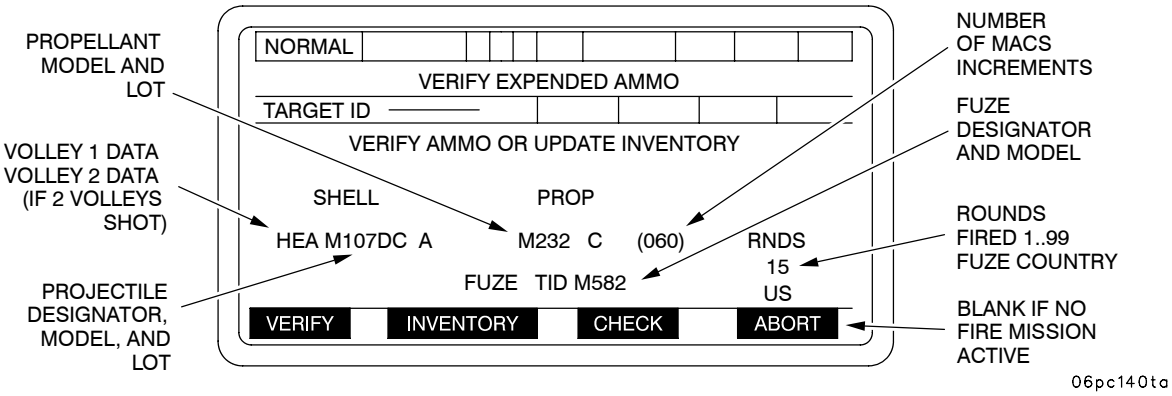

## 2-15 AFCS FIRE MISSION - CONTINUED

### 2-15.3 Ammunition Accountability.

**NOTE**

- If a shell, fuze or propellant is entered in the AFCS inventory, but the quantity is insufficient for the mission, or zero, the AFCS will prompt the Chief of Section to accept or reject the mission (in case a new load of ammunition just arrived and has not been entered into inventory yet).
- If a fire mission is activated while you are in any of the inventory management menus, all completed entries will be saved automatically.

It is essential that accurate ammunition updates to the AFCS be done in order to be able to fire all missions received. This should be done after a mission is fired. When all rounds in a mission have been fired, a VERIFY EXPENDED AMMO screen is displayed. This screen asks the operator either to verify ammunition fired or to update the ammo inventory. This is accomplished as follows:

a. If the ammunition shown in the lower part of the VERIFY EXPENDED AMMO screen is an accurate account of the ammunition fired, press VERIFY key, to update the ammunition count. This updates the AFCS ammunition count automatically.

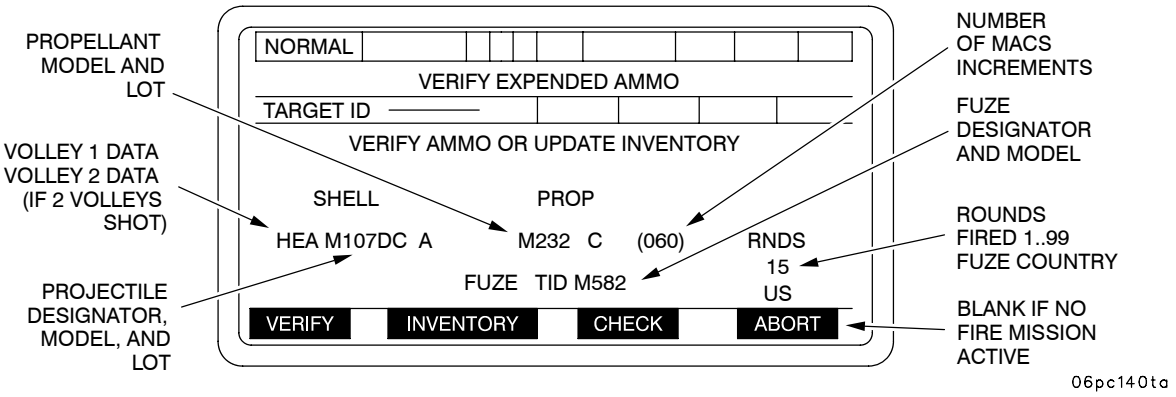

# 2-15 AFCS FIRE MISSION - CONTINUED

## 2-15.3 Ammunition Accountability - Continued

b. If the ammunition shown on the VERIFY EXPENDED AMMO screen is not an accurate account of ammunition fired (for example, a compatible fuze was used as a substitute for the fuze specified in the mission), press the INVENTORY key. This causes an INVENTORY MANAGEMENT screen to be displayed.

**NOTE**

When INVENTORY key is pressed, SHELL, PROP and FUZE must be updated.

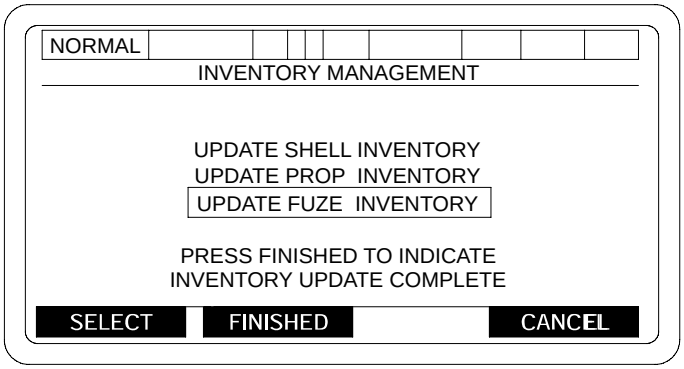


06pc172m

c. This will allow the operator to manually input the type of round actually fired and correct the ammo inventory.

d. If FINISHED is pressed at this point, the operator will be returned to a ROUND COMPLETE screen and none of the ammo from that fire mission will be subtracted from the inventory.

DELETED

## 2-15 AFCS FIRE MISSION - CONTINUED

### 2-15.4 End of Mission.

Notification that a Fire Mission has ended is sent by an END OF MISSION (EOM) message from the POC. Normally, this is done when all rounds requested in a Fire Mission have been fired. When all the rounds for a mission have been fired, a ROUNDS COMPLETE OR MISSION PAUSE, AWAITING EOM OR CONTINUATION OF MISSION screen will be displayed until an EOM message is sent from the POC. When the EOM message is received by the AFCS, an END OF MISSION screen is displayed.

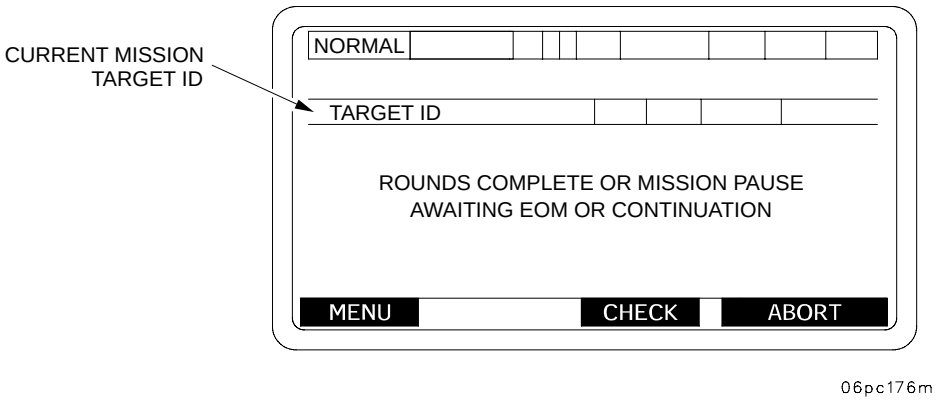


**CAUTION**

Operate Personnel Fan (Exhaust) switch on the Accessory Control Box with the Vent Duct Control Handle in DOWN position for 2 minutes when crew members observe fumes, smoke or indication of carbon monoxide build up in the crew compartment.

**NOTE**

While awaiting EOM or continuation of a mission, you can access the SETUP AND INFORMATION menus by pressing the MENU key (e.g. to update inventory to add new ammo received). The AFCS will automatically interrupt whatever you are doing if the fire mission is continued.

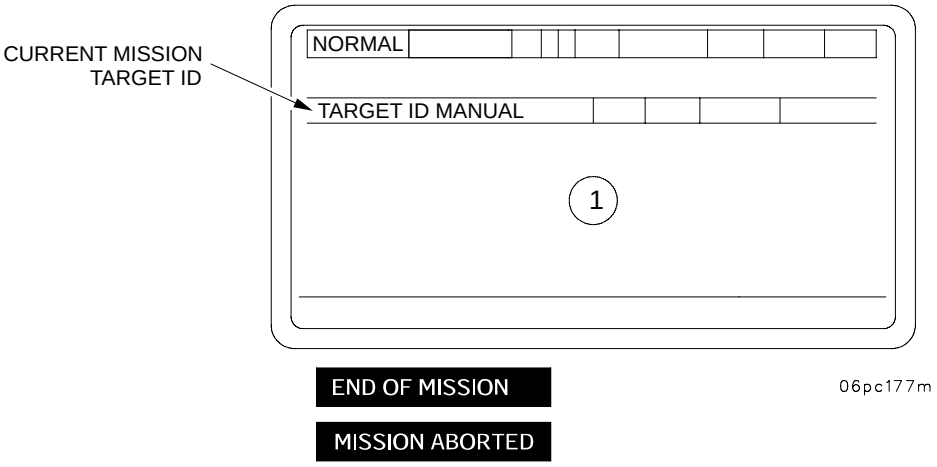

# 2-15 AFCS FIRE MISSION - CONTINUED

## 2-15.5 AFCS EMERGENCY MISSION

Because the M109A6 makes frequent tactical and survivability moves, receiving a Fire Mission while moving will become a routine event. During a move, a Fire Mission order may be sent requiring the individual howitzer to stop, emplace, and fire on a target at any time. When this type of order is sent, an audible alert and a visible alert in the form “FIREMSN RECEIVED,” “ACK” in field 16 is displayed to the operator.

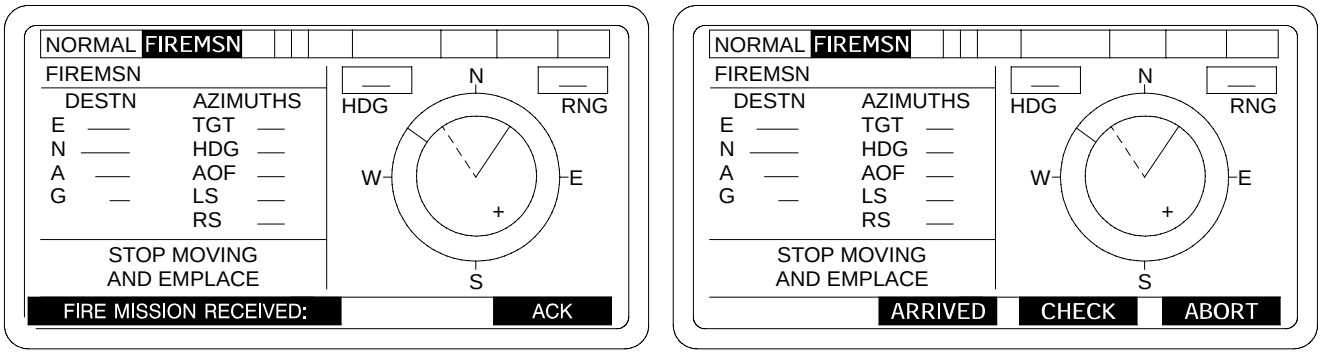


06pc143t

2-15.5.1 Emplace.

The chief of section must ACK the mission and select a suitable firing position as quickly as possible. Depress ARRIVED soft key to receive the Fire Mission. Fire Mission data will be computed and displayed.

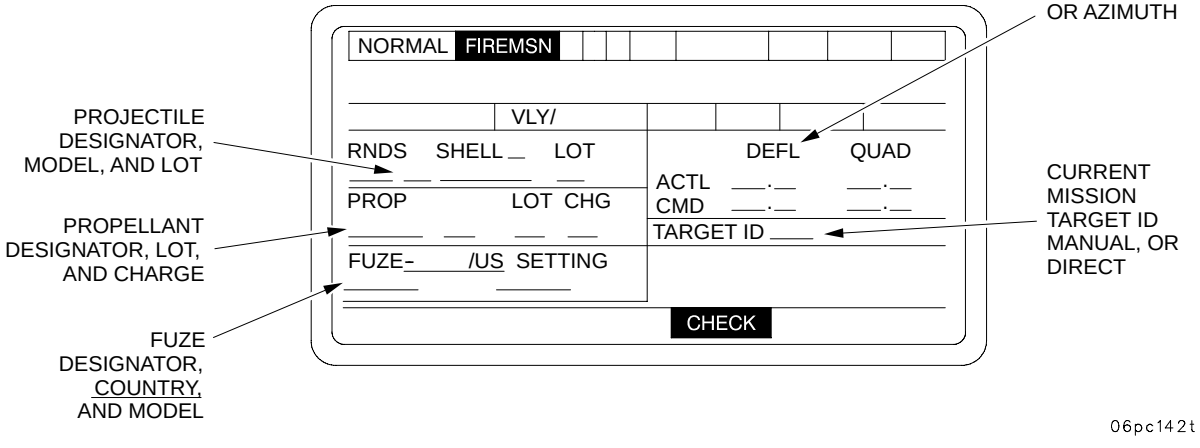


06pc142t

# 2-15 AFCS FIRE MISSION - CONTINUED

## 2-15.5 AFCS EMERGENCY MISSION - Continued

2-15.5.2 Ready Gun.

a. Set HYDRAULIC POWER switch on hydraulic control box and GUN SERVO switch on DU to ON.

b. Release gun tube from travel lock.

c. Release cab traverse lock.

2-15.5.3 LAY, LOAD, LAY, AND FIRE.

**NOTE**

Ballistic computations must have been completed before LAY key is depressed.

a. Depress and hold LAY key to bring gun to target Azimuth and LAY elevation. Look thru tube and verify immediate Crest is clear.

b. Depress LOAD key to LAY weapon on COMMANDED deflection and LOAD quadrant.

c. Depress LAY key to LAY weapon on COMMANDED deflection and quadrant. Ensure LAY key is held until LAY indicator is highlighted.

d. On command, fire the gun.

2-15.5.4 End of Mission.

a. When END OF MISSION message is received, wait for instructions to proceed with displacement.

b. After the END OF MISSION message, the MOVE ORDER screen with previous move mission data will be displayed.

b.1 Turn on Personnel Fan (Exhaust) switch on the Accessory Control Box and move the Vent Duct Control Handle into DOWN position. Operate Personnel Fan for 1-2 minutes until all fumes are exhausted.

c. Proceed to ordered destination.

**CAUTION**

Operate Personnel Fan (Exhaust) switch on the Accessory Control Box with the Vent Duct Control Handle in DOWN position for 2 minutes when crew members observe fumes, smoke or indication of carbon monoxide build up in the crew compartment.

## 2-15 AFCS FIRE MISSION - CONTINUED

### 2-15.6 Direct Fire Procedures Using AFCS.

**NOTE**

While the AFCS can be used, manual (one man-one sight) procedures have been found to be faster and just as accurate.

For direct fire against close range targets, AFCS can be used to aid in laying the cannon. COS identifies target, states type charge, projectile and fuze to be used, estimates speed (if target is moving) and announces lead to GUNNER. COS continues direct firing procedures until target is destroyed.

a. COS first identifies direct fire target. If target consists of several weapons, he selects target that is the greatest threat to his position.

b. COS gives fire command in the following order:

| ELEMENT | EXAMPLE |
|---|---|
| Target designation | Target, lead tank |
| Target direction | Left/right front |
| Projectile, charge, fuze | Shell HE, charge 7, fuze quick |
| Lead | Lead left/right 10 |
| Method of fire | Fire at will |

**NOTE**

- Fire at will means to keep firing until target is destroyed or another command is given.
- COS will estimate range if he has no accurate range.
- COS will use lead chart mounted in commander's cupola (shown below) for initial lead.

**DIRECT FIRE MOVING TARGET LEAD**

| TARGET SPEED (MPH) | TARGET DIRECTION OF TRAVEL LEAD IN MILS (m) | | |
|---|---|---|---|
| | ↔ | ⤫ | ↕ |
| 5 | 5m | 5m | 0m |
| 10 | 10m | 5m | 0m |
| 15 | 15m | 10m | 0m |
| 20 | 20m | 15m | 0m |
| 25 | 20m | 15m | 0m |
| 30 | 30m | 20m | 0m |

c. On Display Unit COS sets GUN SERVO switch to OFF.

## 2-15 AFCS FIRE MISSION - CONTINUED

### 2-15.6 Direct Fire Procedures Using AFCS - Continued

d. On hydraulic control box (1), turn HYDRAULIC POWER switch (2) to ON, TRAVERSE MODE switch (3) to POWER, TRAVERSE CONTROL switch (4) to GUNNER, and ELEVATE CONTROL switch (5) to COS.

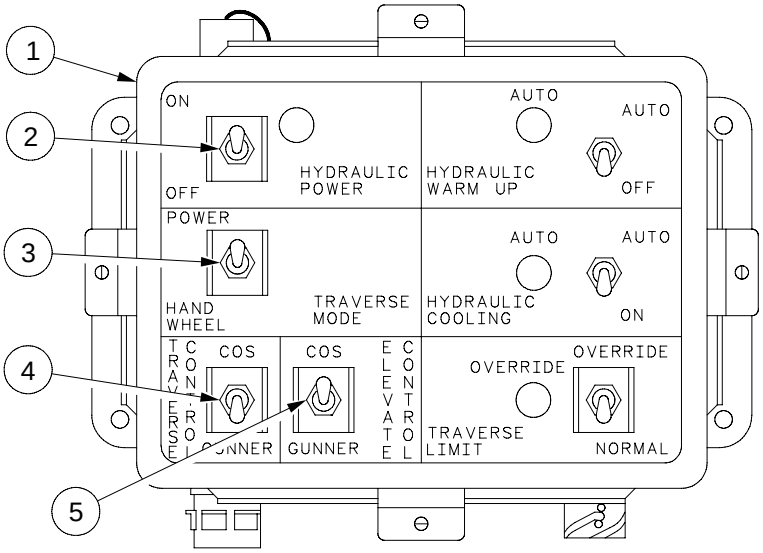


hipc173a

e. Bring SETUP AND INFORMATION menu on Display Unit using one of the following procedures:

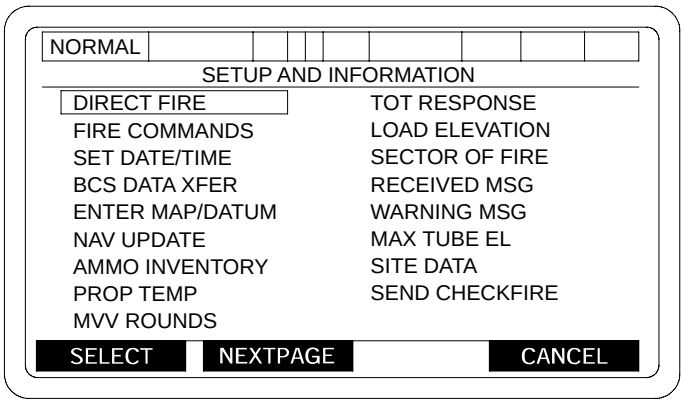


06pc180m

**NOTE**

The NAV update selection shall be available to the AFCS operator at all times except when a fire mission is active or the navigation subsystem is unavailable.

DELETED

# 2-15 AFCS FIRE MISSION - CONTINUED

## 2-15.6 Direct Fire Procedures Using AFCS - Continued

f. With cursor (box) at DIRECT FIRE, press soft key located directly beneath SELECT prompt to display a DIRECT FIRE MODE ENTRY menu on DU.

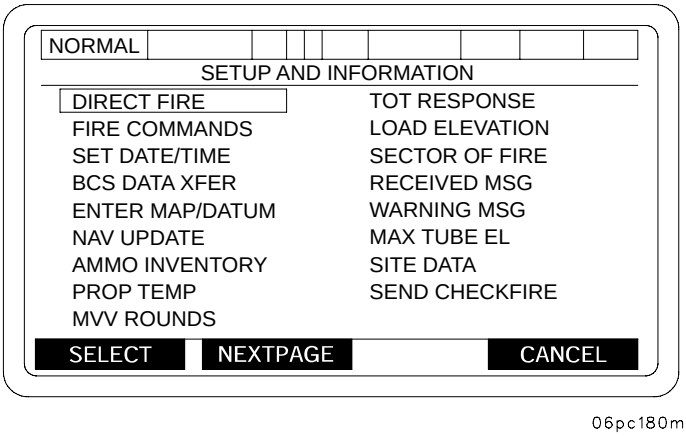


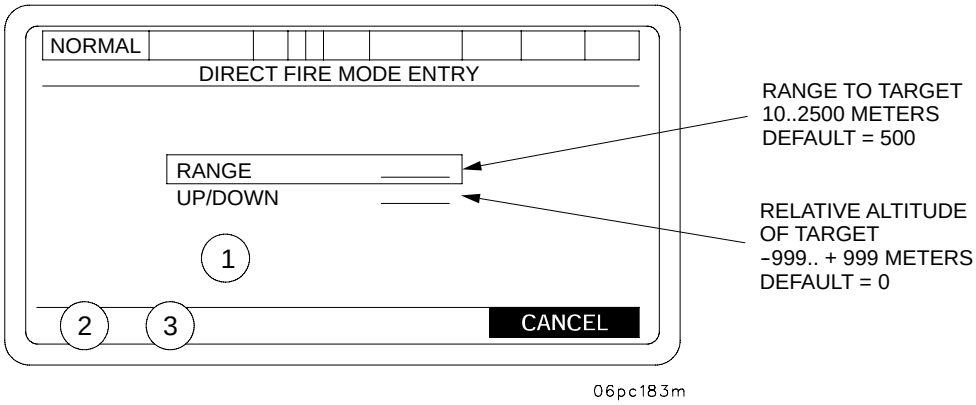


(1) blank - No selection made
"TYPE VALUE 10 TO 2500 METERS" - RANGE Selected.
"-PRESS ENT KEY-"
"TYPE VALUE -999 TO +999" - UP/DOWN Selected.
"-PRESS ENT KEY-"

(2) blank - If RANGE or UP/DOWN Selected

SELECT -Awaiting Selection or USE ALL. Selects current menu item.

(3) blank - If RANGE Selected

+/- - UP/DOWN Selected. Change sign of value

USE ALL - Awaiting Selection or USE ALL. Initiate direct fire mission.

## 2-15 AFCS FIRE MISSION - CONTINUED

### 2-15.6 Direct Fire Procedures Using AFCS - Continued

g. Press soft key located directly beneath the USE ALL prompt of the DIRECT FIRE MODE ENTRY menu to display a FIRE MISSION menu.

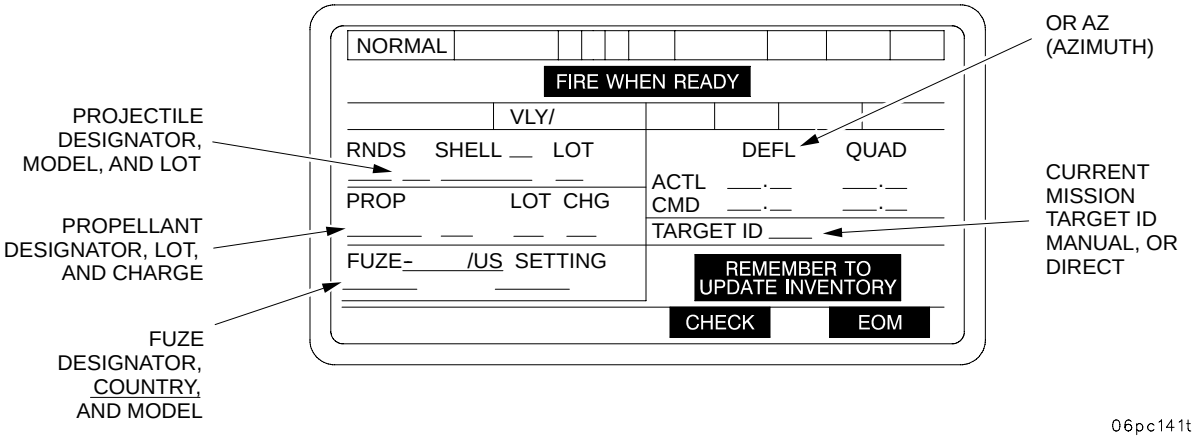


**NOTE**

You will only use the ACTL QUAD field of this screen to set tube elevation.

h. Using the DIRECT FIRE RANGE PLATE, the COS determines elevation based on estimated range. Using COS control handle, COS elevates/depresses gun to proper elevation in the ACTL QUAD field of the FIRE MISSION menu, then announces "SET" continually until howitzer is fired.

**DIRECT FIRE RANGE PLATE**
**155MM HOWITZER**

| M549A1 RAP | | M107 HE PROJECTILE | |
|---|---|---|---|
| ROCKET OFF | | M19A1 PC WB | |
| M203 SERIES PC RB | | M119A2 PC RB | |
| RANGE METERS | ELEV MILS | RANGE METERS | ELEV MILS |
| 400 | 3 | 400 | 4 |
| 600 | 5 | 600 | 7 |
| 800 | 6 | 800 | 9 |
| 1000 | 8 | 1000 | 11 |
| 1200 | 9 | 1200 | 14 |
| 1400 | 11 | 1400 | 16 |
| L15 HE PROJECTILE | | M107 HE PROJECTILE | |
| M203 SERIES PC RB | | M4A2 PC WB | |
| RANGE METERS | ELEV MILS | RANGE METERS | ELEV MILS |
| 400 | | 400 | 6 |
| 600 | | 600 | 10 |
| 800 | | 800 | 13 |
| 1000 | | 1000 | 16 |
| 1200 | | 1200 | 20 |
| 1400 | | 1400 | 23 |
| PLATE DIRECT FIRE | | P/N 12910859 | |

# 2-15 AFCS FIRE MISSION - CONTINUED

## 2-15.6 Direct Fire Procedures Using AFCS - Continued

i. On subsequent rounds, the COS will estimate a new range based on observed effects and repeat step h until target is destroyed or other commands become necessary.

j. GUNNER sets azimuth counter (6) to 3200, and turns direct/indirect fire bar knob (7) to DIRECT position to engage 5.0 mils per click sight mechanism.

**NOTE**

The head of the PANTEL must remain oriented with the gun tube. The PANTEL will be oriented with the gun tube if the azimuth counter reads 3200 and the PANTEL is properly boresighted.

k. If central laying is used, GUNNER applies announced lead to azimuth counter (6). If lead is left, add the lead angle to 3200; if lead is right, subtract the lead angle from 3200. The GUNNER then sights through the eyepiece (8) and traverses tube until vertical hairline (9) of PANTEL centers on the target. If reticle method is used, GUNNER places vertical hairline (10) left or right of target the number of mils lead announced by COS.

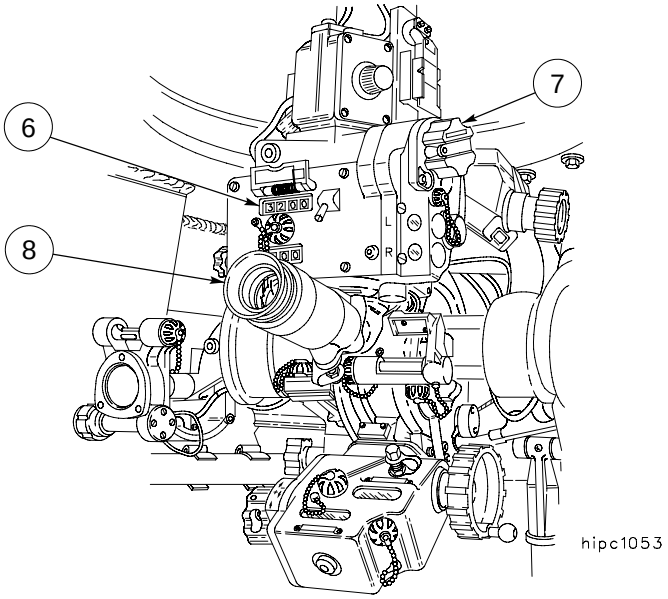


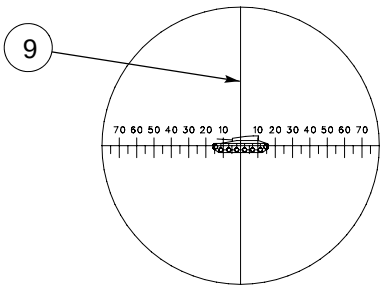


CENTRAL LAYING

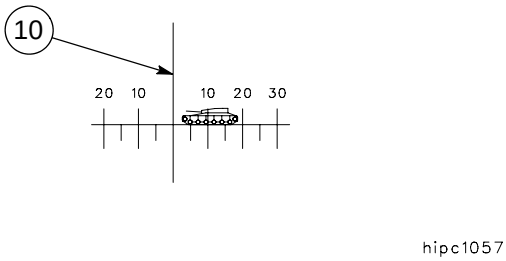


RETICLE METHOD

# 2-15 AFCS FIRE MISSION - CONTINUED

## 2-15.6 Direct Fire Procedures Using AFCS - Continued

l. When GUNNER establishes correct sight picture, and COS has announced “SET,” GUNNER commands “FIRE.”

m. CANNONEER fires gun.

n. After firing, GUNNER continues to lay on target until it is destroyed or a subsequent fire command is issued.

o. COS gives subsequent fire commands based on observed effects and changes lead as necessary.

| ELEMENT | EXAMPLE |
|---|---|
| Change in Lead | Right/left 5 |

p. GUNNER turns azimuth deflection knob in 5-mil (1-click) increments to set lead change.

## 2-15.7 System Menus.

The SETUP AND INFORMATION menu is used to access the various screens to initialize the AFCS and align the Navigation System. It also provides access to menus allowing the operator to enter fire commands and muzzle velocities, access messages, and to monitor AFCS STATUS and tube temperature. The operator can change the display format and intensity, input Manual Move Orders, perform a system update, and access stored targets. The operator can enter a Map Mod; can access the MAINTENANCE MODE MENU; and can update his ammunition inventory. This will complete the capabilities of the system menus.

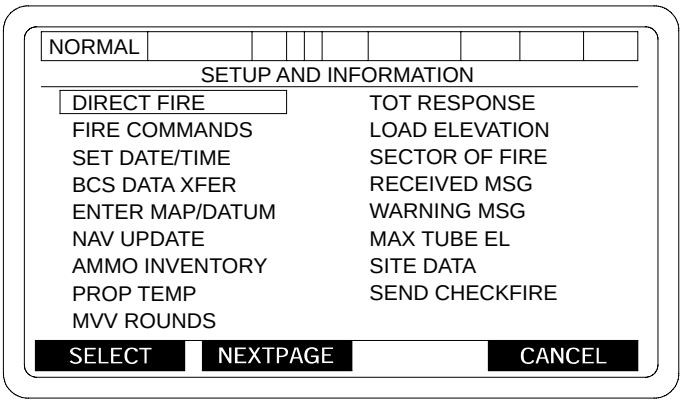


06pc180m

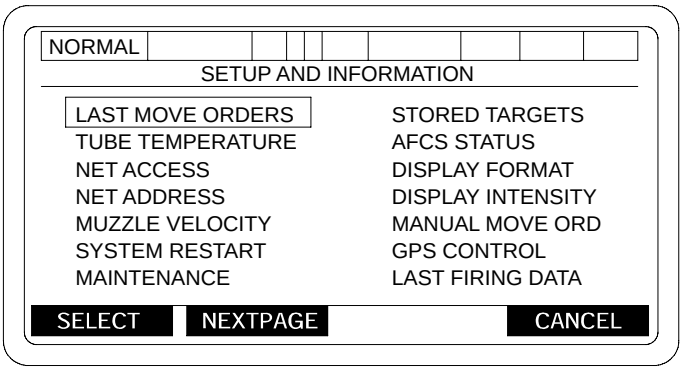


06pc185m

## 2-15 AFCS FIRE MISSION - CONTINUED

### 2-15.7 System Menus - Continued

2-15.7.1 Fire Commands. If the Ballistic Computer or digital communications is out, fire commands (deflection and quadrant) will be sent by voice to the howitzer COS. The operator will enter these fire commands manually as follows:

a. Box in FIRE COMMANDS on SETUP AND INFORMATION menu and press SELECT key to display a FIRE COMMANDS ENTRY screen.

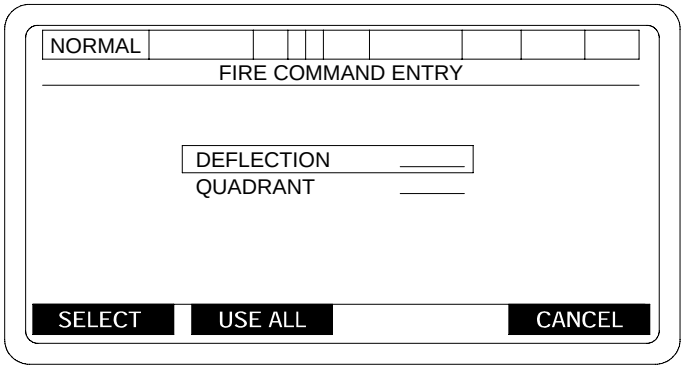


hipc4204

b. With the FIRE COMMANDS ENTRY screen displayed, box in DEFLECTION; press SELECT key; type in deflection; and press ENT key.

c. Box in QUADRANT and press SELECT key. Type in quadrant and press ENT key.

d. When correct fire command has been entered, press USE ALL key to display a FIRE MISSION screen with firing data in the COMMANDED (CMD) field.

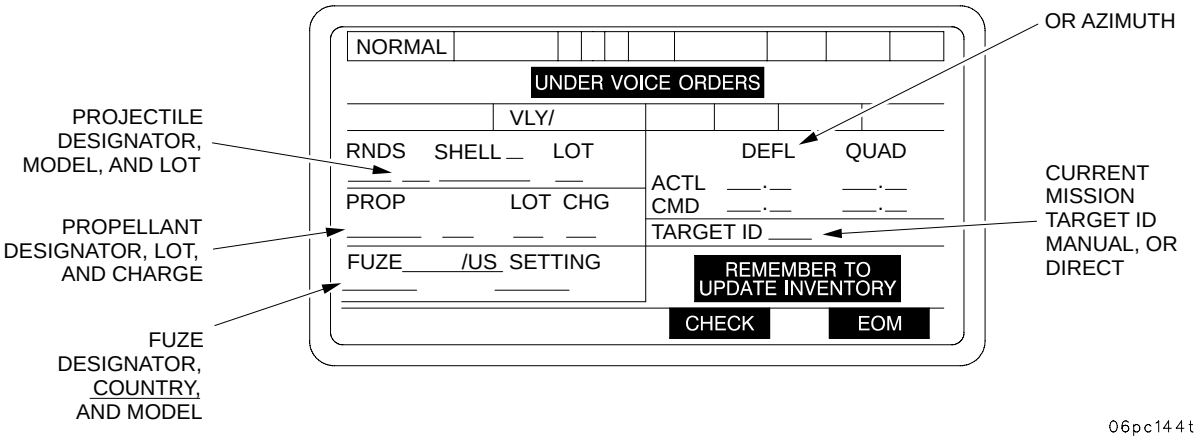


06pc144t

e. The fire mission is fired using normal procedures.

f. When the voice order to end the mission is received, press the EOM key.

g. Ammo accountability is then manually processed (para 2-15.3).

## 2-15 AFCS FIRE MISSION - CONTINUED

### 2-15.7 System Menus - Continued

2-15.7.2 Messages. The two types of AFCS messages accessed from the SETUP AND INFORMATION menu are RECEIVED MSG and WARNING MSG. The received messages are ones received from the POC and the warning messages are generated by the AFCS for system status. When there is a new message to read, a RCVD MSG (R) highlighted field 5 or WARN MSG (W) highlighted field 4 indicator will be displayed at the top of the screen. Access messages using the following procedures:

a. Box in desired message on SETUP AND INFORMATION menu and press SELECT key to display a RECEIVED MESSAGE/SYSTEM WARNING MESSAGE.

b. If more than one message is in the message queue, display next message by pressing the NEXT MSG key. If a message contains more than one page, display next page by pressing NEXT PAGE key.

c. To return to the SETUP AND INFORMATION menu, press CANCEL key.

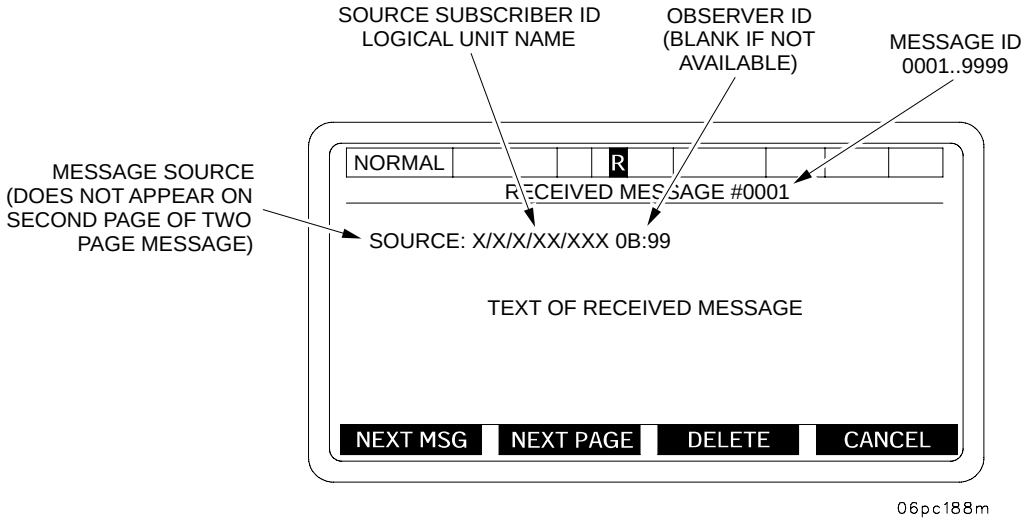


NEXT MSG = DISPLAY NEXT MESSAGE (BLANKED IF NO NEXT MESSAGE)

NEXT PAGE = DISPLAY NEXT PAGE (BLANKED IF NO NEXT PAGE)

DELETE = DELETE CURRENT MESSAGE (BLANKED IF NO MORE MESSAGES)

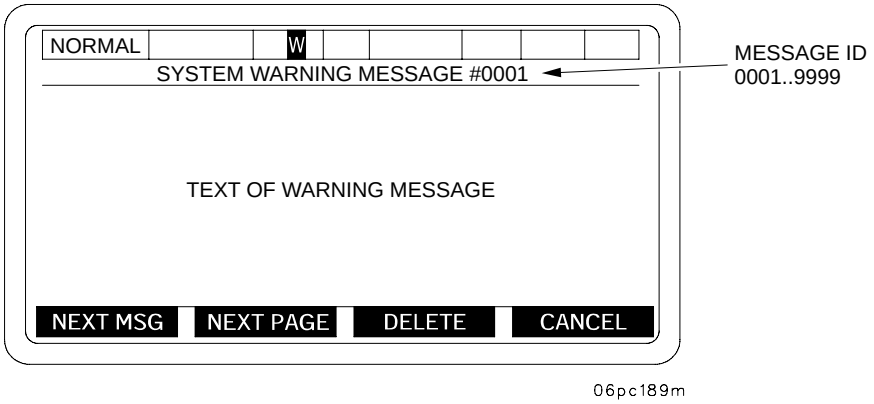


NEXT MSG = DISPLAY NEXT MESSAGE (BLANKED IF NO NEXT MESSAGE)

DELETE = DELETE CURRENT MESSAGE (BLANKED IF NO MORE MESSAGES)

# 2-15 AFCS FIRE MISSION - CONTINUED

## 2-15.7 System Menus - Continued

2-15.7.2.1 MAXIMUM TUBE ELEVATION. From the SET UP AND INFORMATION menu select “MAX TUBE EL” to input the maximum tube elevation.

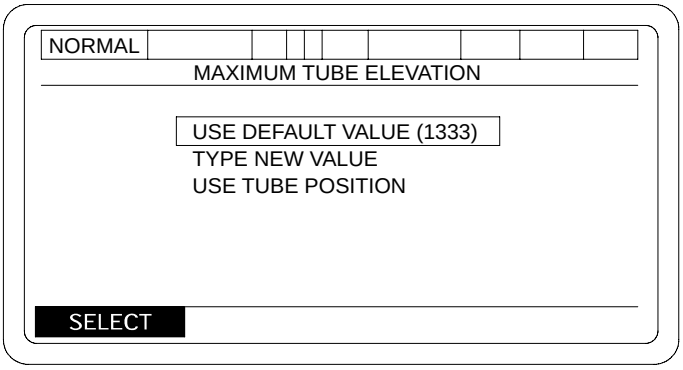


06pc154m

a. Entering MAXIMUM TUBE ELEVATION. If a maximum tube elevation is not entered, the default value as shown on the display will be entered automatically. If an elevation other than the default value is desired, the entry can be made by either of two methods:

**NOTE**

Numerical value must be entered before sign.
Default sign is (+).

b. Box in TYPE NEW VALUE and depress SELECT to bring up a new MAXIMUM TUBE ELEVATION display. Enter required value for MAX TUBE EL and press ENT key.

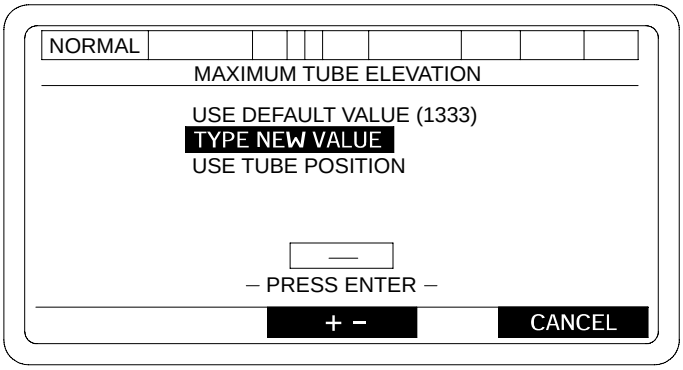


06pc155m

# 2-15 AFCS FIRE MISSION - CONTINUED

## 2-15.7 System Menus - Continued

c. Box in USE TUBE POSITION and press SELECT key to bring up a new MAXIMUM TUBE ELEVATION display. Using the COS or gunner's control handle, move tube to desired elevation and press ENT key.

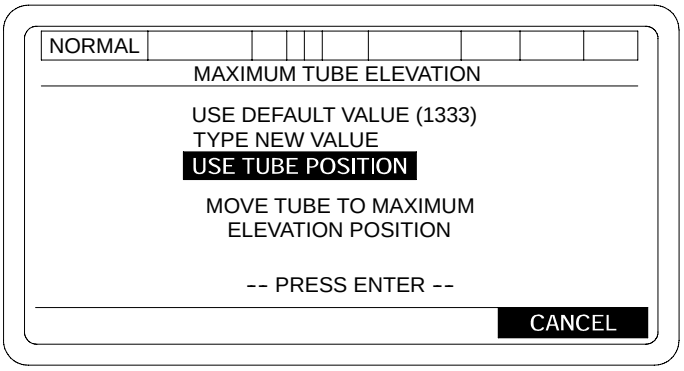


06pc156m

# 2-15 AFCS FIRE MISSION - CONTINUED

## 2-15.7 System Menus - Continued

2-15.7.3 Send Checkfire. Selecting SEND CHECKFIRE will result in questions asked, “ARE YOU SURE”, “YES” “NO”. “YES” selection will cause all howitzer systems to be placed on CHECKFIRE. Only the POC/BCS can cancel the CHECKFIRE. “NO” selection = No action.

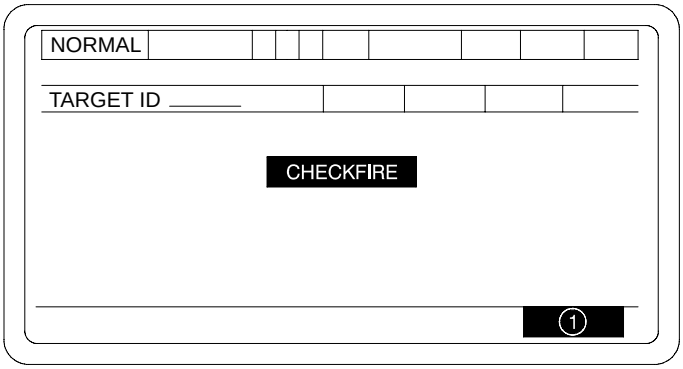


1 EOM - MISSION is direct or manual

ABORT - MISSION is not direct or manual

06pc145t

2-15.7.4 Stored Targets. The AFCS can store up to ten targets. These targets can be reviewed for information concerning target number, rounds to be fired, shell, propellant, fuze, and method of control. To access the target summary, perform the following steps:

a. Box in STORED TARGETS on SETUP AND INFORMATION menu and press SELECT key to display a STORED TARGET SUMMARY screen.

b. If there is more than one page, press NEXT PAGE key to display next page.

c. To return to SETUP AND INFORMATION menu, press CANCEL key.

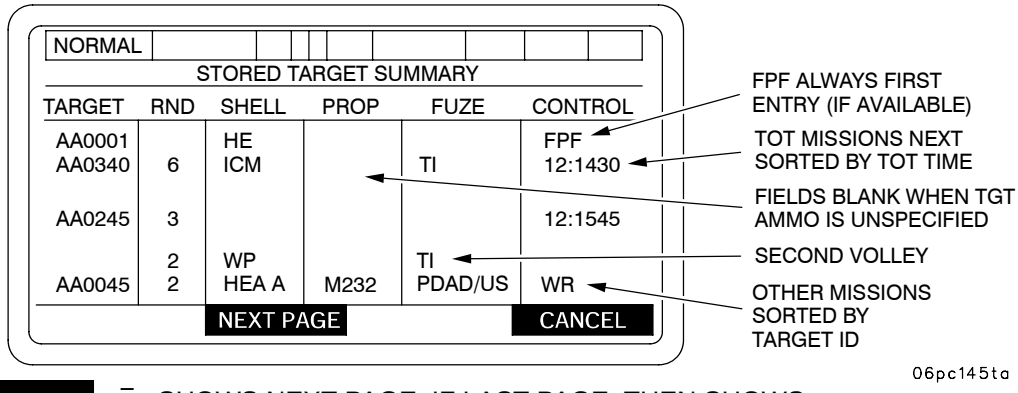


06pc145ta

NEXT PAGE = SHOWS NEXT PAGE. IF LAST PAGE, THEN SHOWS FIRST PAGE. (BLANKED IF ONLY ONE PAGE OR NO TARGETS).

**NOTE**

Shell and fuze entries will be blank if the stored mission arrives from the BCS with unspecified ammunition and is not an FPF mission (as shown above in target ID AA0245).

## 2-15 AFCS FIRE MISSION - CONTINUED

### 2-15.7 System Menus - Continued

2-15.7.5 AFCS STATUS. To display the AFCS SUBSYSTEM STATUS, proceed as follows:

a. Box in AFCS STATUS on SETUP AND INFORMATION menu and press SELECT to display the AFCS STATUS screen.

b. Cursor and select an AFCS SUBSYSTEM to view the sub-components. The status of each sub-component will be displayed either "OK" or "FAIL."

c. To return to the SETUP AND INFORMATION menu, press CANCEL key.

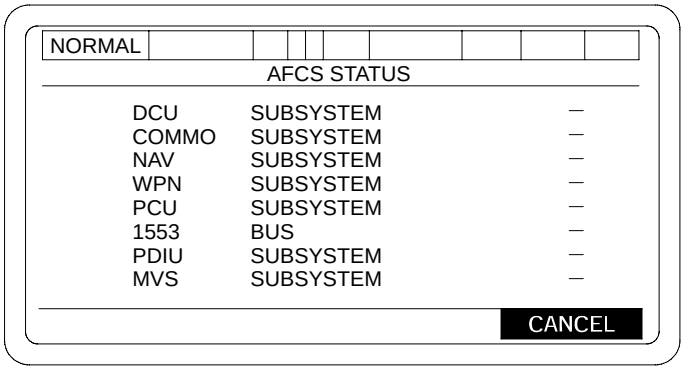


06pc075ma

2-15.7.6 Last Move Orders. To display the last move orders received by the AFCS, proceed as follows:

a. Box in LAST MOVE ORDERS on SETUP AND INFORMATION menu and press SELECT key. A STEERTO FIRE AREA screen will be displayed showing LAST MOVE ORDERS.

b. Press the EMPLACE key to display an EMPLACE FIRE AREA screen showing LAST MOVE ORDERS.

c. From STEERTO FIRE AREA or EMPLACE FIRE AREA screen, the SETUP AND INFORMATION menu can be reached by pressing the CANCEL key.

**NOTE**

This will not be available after the first Survivability Move.

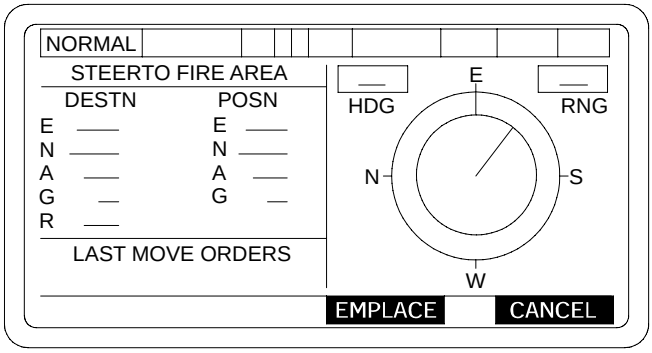


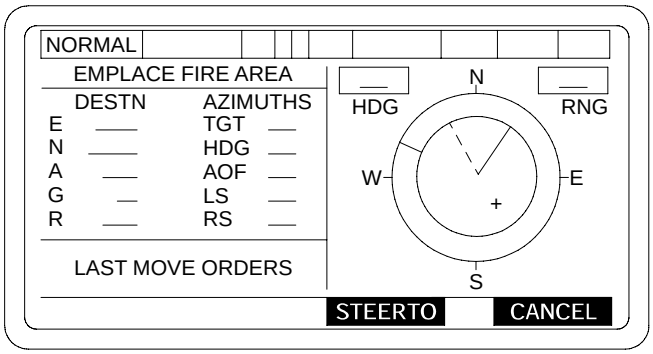


06pc192m

06pc191m

# 2-15 AFCS FIRE MISSION - CONTINUED

## 2-15.7 System Menus - Continued

2-15.7.7 Tube Temperature. The TUBE TEMPERATURE STATUS is shown on the FIRE MISSION screen as COLD, WARM, or HOT; and a time is displayed which indicates how long a complete round may remain in the tube. TUBE TEMPERATURE STATUS can also be displayed as follows:

a. Box in TUBE TEMPERATURE on SETUP AND INFORMATION menu and press SELECT key.

b. A TUBE TEMPERATURE screen will be displayed showing TEMPERATURE STATUS (COLD, WARM, HOT), and SAFE TIME IN TUBE.

c. To return to SETUP AND INFORMATION menu, press CANCEL key.

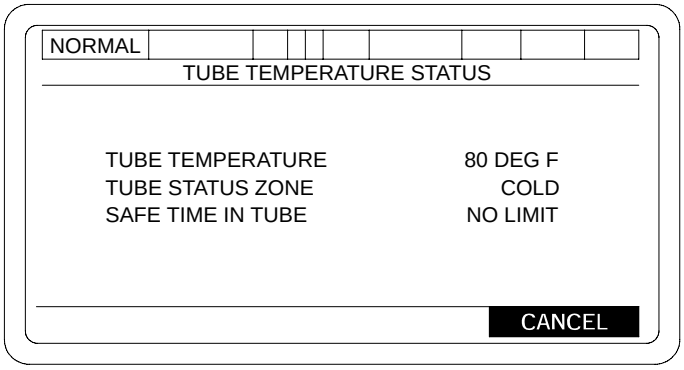


06pc193m

2-15.7.8 System Restart. To do a SYSTEM RESTART without shutting the system off and powering back-up, proceed as follows:

a. Box in SYSTEM RESTART on SETUP AND INFORMATION menu and press SELECT key. A prompt will be displayed, “ARE YOU SURE”, “YES” or “NO”.

b. The system will restart at a POWER UP STATUS.

c. “INITIALIZATION” must be performed.

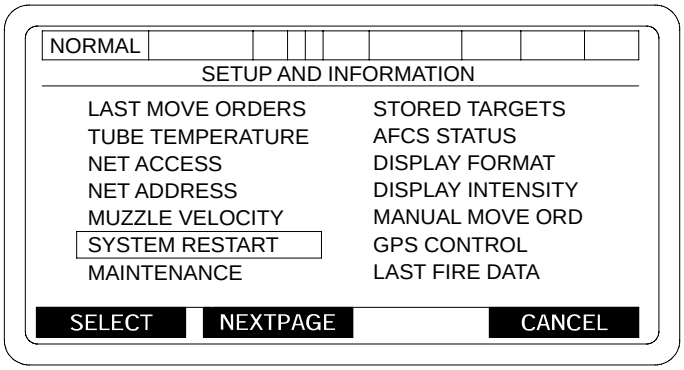


06pc194m

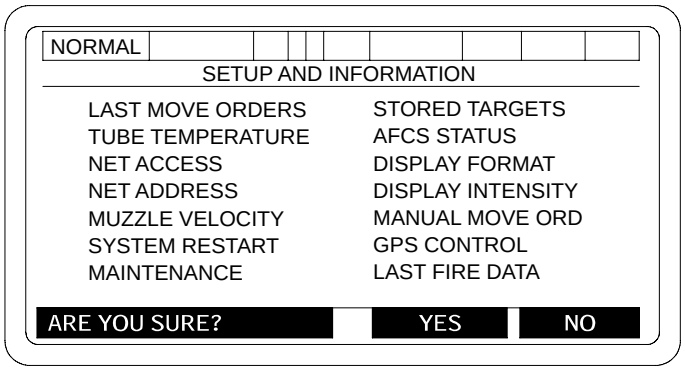


06pc195m

# 2-15 AFCS FIRE MISSION - CONTINUED

## 2-15.7 System Menus - Continued

2-15.7.9 Display Format. This function is used to change the display of the tube position from AZIMUTH to DEFLECTION, and vice versa; or the TEMPERATURE STATUS display from Fahrenheit to Celsius, and vice versa. This display format is changed as follows:

a. Box in DISPLAY FORMAT on SETUP AND INFORMATION menu and press SELECT key to display a DISPLAY FORMAT screen.

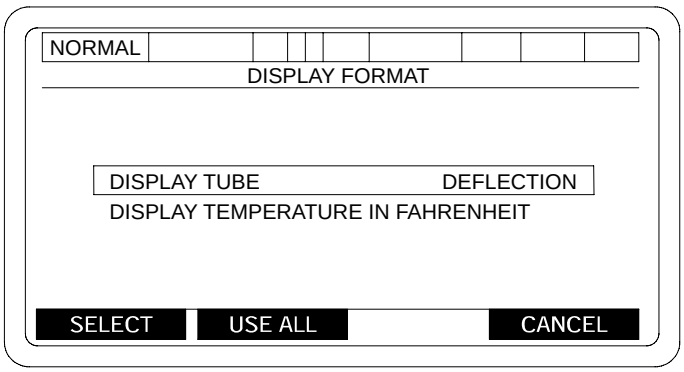


06pc196m

b. To change deflection, box in DISPLAY TUBE DEFLECTION and press SELECT to display another DISPLAY FORMAT screen.

c. This screen asks the question: CHANGE TO AZIMUTH/DEFLECTION? Press the appropriate soft key, YES or NO. This will return the display to the original DISPLAY FORMAT screen.

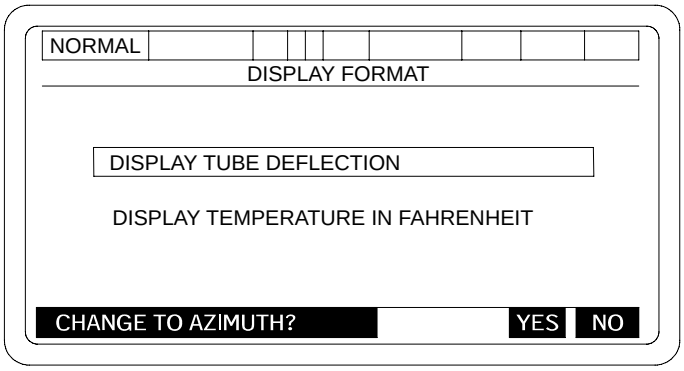


06pc197m

## 2-15 AFCS FIRE MISSION - CONTINUED

### 2-15.7 System Menus - Continued

d. To change the temperature display, box in DISPLAY TEMPERATURE IN FAHRENHEIT and press SELECT key to display another DISPLAY FORMAT screen.

e. Answer screen question CHANGE TO CELSIUS/FAHRENHEIT? by pressing appropriate soft key.

f. When original DISPLAY FORMAT screen is displayed, press USE ALL key to return to SETUP AND INFORMATION menu.

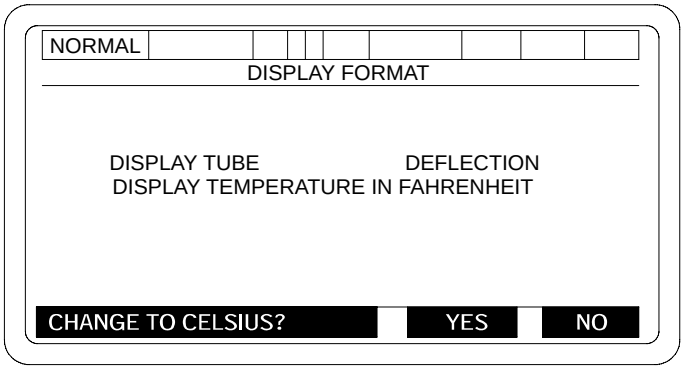


06pc198m

2-15.7.10 Display Intensity. The display intensity of the EL Panel can be changed to four different intensity levels as follows:

a. Box in DISPLAY INTENSITY on SETUP AND INFORMATION menu and press SELECT key to display a SELECT DISPLAY INTENSITY screen.

b. On the SELECT DISPLAY INTENSITY screen, box in desired intensity and press SELECT key. Display will change to the selection made.

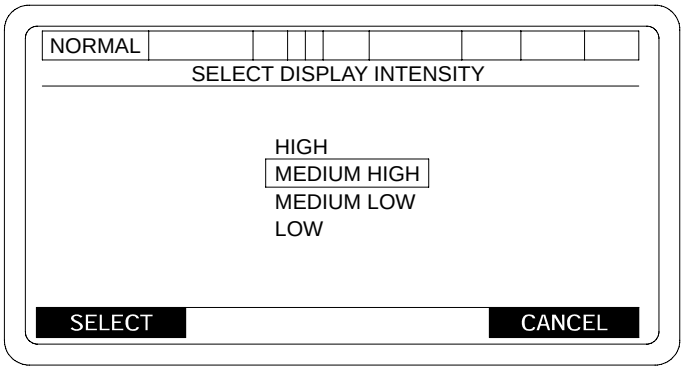


06pc199m

# 2-15 AFCS FIRE MISSION - CONTINUED

## 2-15.7 System Menus - Continued

2-15.7.11 Manual Move Order. When it is necessary to move the howitzer without a move order from the POC enter the movement data as follows:

a. Box in MANUAL MOVE ORDER on SETUP AND INFORMATION menu and depress SELECT key to display a MANUAL MOVE ORDER ENTRY screen.

b. Enter data by boxing in each data field and then typing in desired data. As each field is filled, press ENT key to enter data.

c. When all data has been entered, press USE ALL key. This will cause the SETUP AND INFORMATION screen to be displayed with MOVE ORD at the top. Press CANCEL key to display the MOVE ORDER screen (STEERTO or EMPLACE).

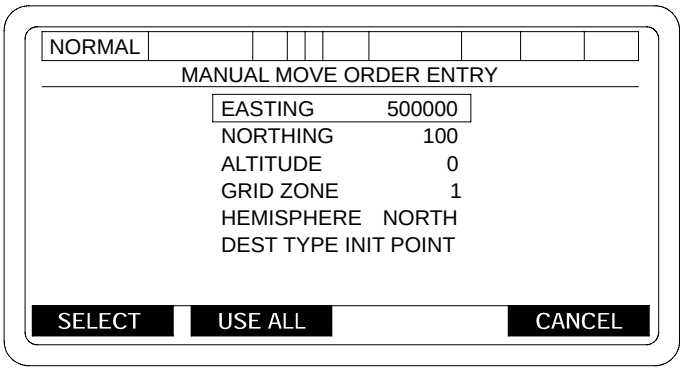


06pc200m

**NOTE**

- If the Move Order coordinates are outside the MapMod, no AFCS warning message will be issued. All Move Order coordinates should be checked with a map spot, or through some other secondary means to insure they are within the current MapMod.
- If the Move Order coordinates are in an adjacent Grid Zone, the AFCS will automatically convert these coordinates to the MapMod Grid Zone. Once the STEER TO screen is displayed, the entered coordinates will be converted to the MapMod Grid Zone. If a map spot is performed, the MapMod Grid Zone will need to be extended into the adjacent Grid Zone.
- If Destination Type is to a FIRING POINT, Operator must input SECTOR OF FIRE prior to inputting a Manual Move Order.

# 2-15 AFCS FIRE MISSION - CONTINUED

## 2-15.7 System Menus - Continued

- Destination Types are: LOG POINT (for resupply), INIT POINT (for survey control point) and FIRE POINT.
- If DO NOT MOVE was on the screen before you start this move, the AFCS will notify BCS that the howitzer is moving.

2-15.7.12 GPS Control. Used to enhance positioning. The POC will instruct you when to use GPS Control.

**NOTE**

Use according to unit SOP.

a. Select either USE GPS AIDING or USE ONLY CODED GPS DATA.

b. You will receive the following operator prompts.

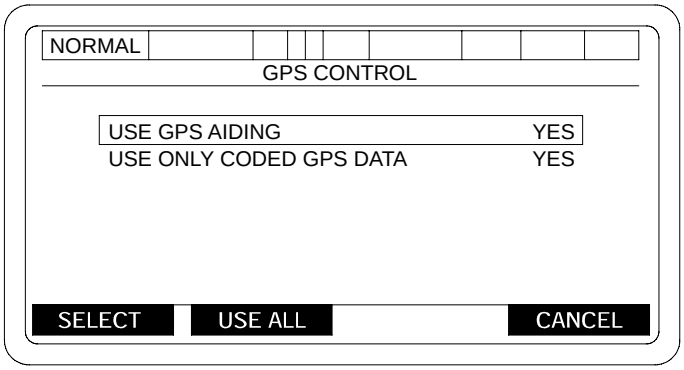


06pc201m

OPERATOR PROMPTS (ON SOFTKEY LINE):

1. WHEN GPS AIDING SELECTED:

USE GPS AIDING? | YES | NO

2. WHEN USE ONLY CODED GPS DATA SELECTED:

USE ONLY CODED GPS? | YES | NO

NOTE: VALUES SHOWN ARE SYSTEM SUPPLIED DEFAULTS.

# 2-15 AFCS FIRE MISSION - CONTINUED

## 2-15.7 System Menus - Continued

2-15.7.12 .1 Last Firing Data.

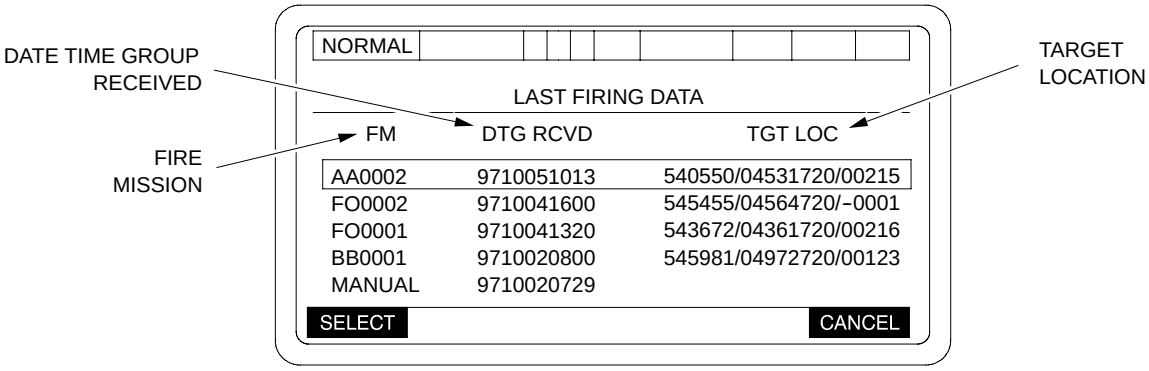


SELECT : View firing data from a particular

CANCEL : Return to SETUP AND INFORMATION menu

Mission data displayed in order from latest received to earliest

06pc146t

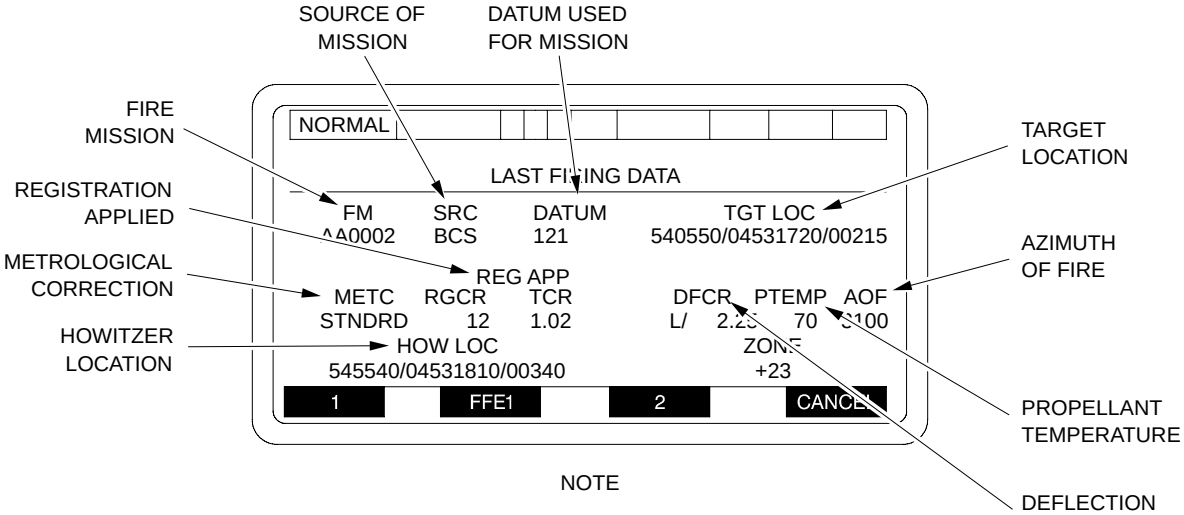


NOTE

ADJ if an Adjust Mission exists; otherwise BLANK
If ADJ, press softkey allows view of pre-shot data for ADJUST phase.

FFE2 if an FFE2 Mission exists; otherwise BLANK
If FFE2, press softkey allows view of pre-shot data for FFE2 phase.

FFE1 : View pre-shot data for FFE1 phase

CANCEL : Return to LAST FIRING DATA menu

06pc147t

# 2-15 AFCS FIRE MISSION - CONTINUED

## 2-15.7 System Menus - Continued

2-15.7.12 .1 Last Firing Data - Continued

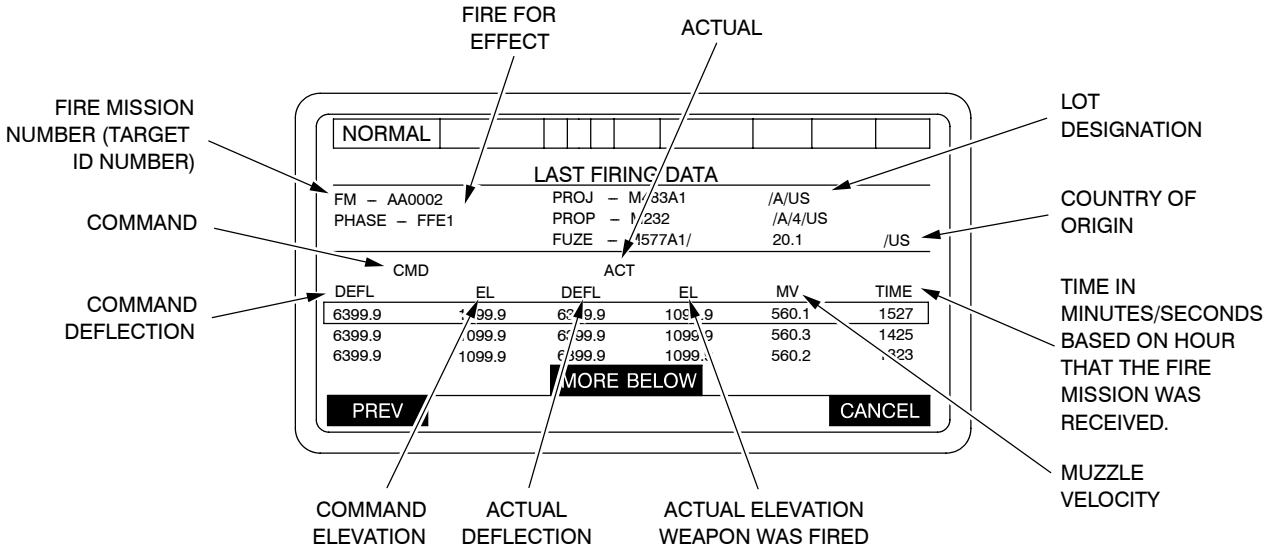


PREV : Returns previous screen for viewing pre-shot data of different phase

CANCEL : Return to LAST FIRING DATA menu

06pc148ta

**NOTE**

If more than 4 shots exist for a particular phase, three will initially be displayed and scrolling will be enabled. As the cursor is scrolled below the first three, two will be displayed, MORE ABOVE will appear on top of the shot data, and MORE BELOW will appear below the shot data.

2-15.7.13 Muzzle Velocity. For more accurate firing data when computing ballistics, measured muzzle velocities are entered into the AFCS. Also, muzzle velocities can be entered as they are measured. This is performed as followed:

**WARNING**

Ensure that correct propellant temperature and shell weights are entered in AFCS. Failure to comply will result in incorrect ballistic computations. This could result in injury or death to friendly troops.

## 2-15 AFCS FIRE MISSION - CONTINUED

### 2-15.7 System Menus - Continued

2-15.7.13 Muzzle Velocity - Continued

a. Box in MUZZLE VELOCITY on SETUP AND INFORMATION menu and press SELECT key to display a MUZZLE VELOCITY screen.

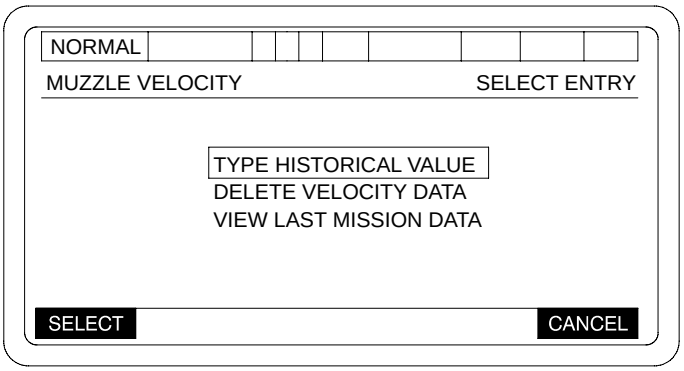


06pc149t

**NOTE**

Data displayed (PROP TYPE, CHG, SHELL TYPE/LOT, VEL) will be last entered data or default data.

b. To enter muzzle velocities as they are measured, box in TYPE HISTORICAL VALUE and press SELECT key to display a MUZZLE VELOCITY screen showing PROP/CHG TYPE.

**NOTE**

The data displayed on the third line of this display is updated as entries are made.

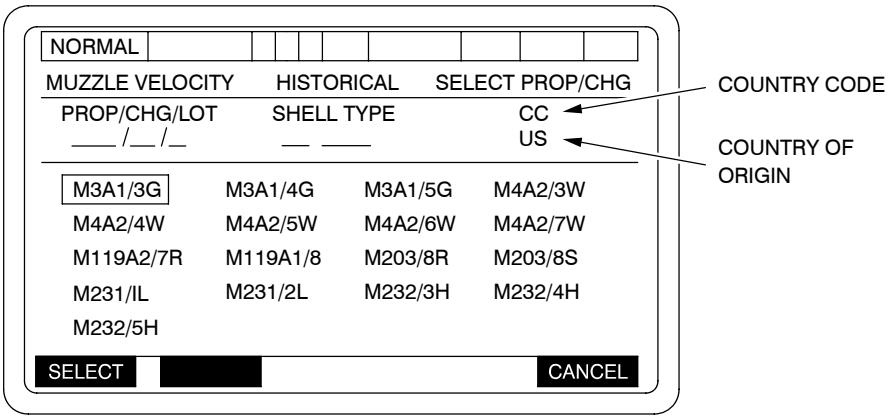


06pc150ta

# 2-15 AFCS FIRE MISSION - CONTINUED

## 2-15.7 System Menus - Continued

2-15.7.13 Muzzle Velocity - Continued

c. Box in PROP/CHG TYPE and press SELECT key. Type selection will be displayed under PROP/CHG TYPE.

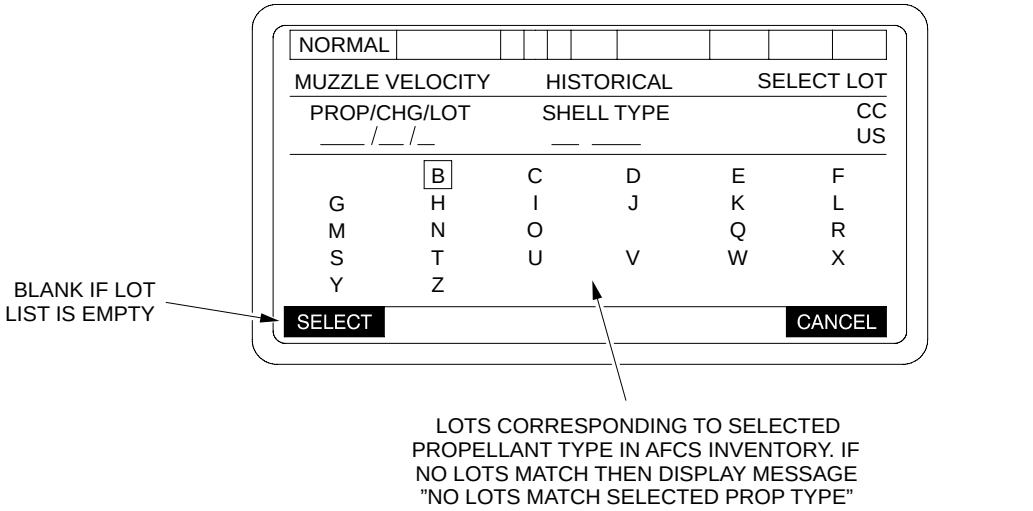


SELECT : Will return to MUZZLE VELOCITY SELECT SHELL display

CANCEL : Will return to DISPLAY MUZZLE VELOCITY SELECT PROP LOT display

06pc152t

d. Box in PROP/LOT and press SELECT. This will select the chosen LOT DESIGNATOR and display the HISTORICAL SHELL TYPE menu.

e. Select charge, SHELL TYPE/LOT in the same manner as PROP/CHG TYPE. Press CANCEL at any time to return the display to the previous item worked.

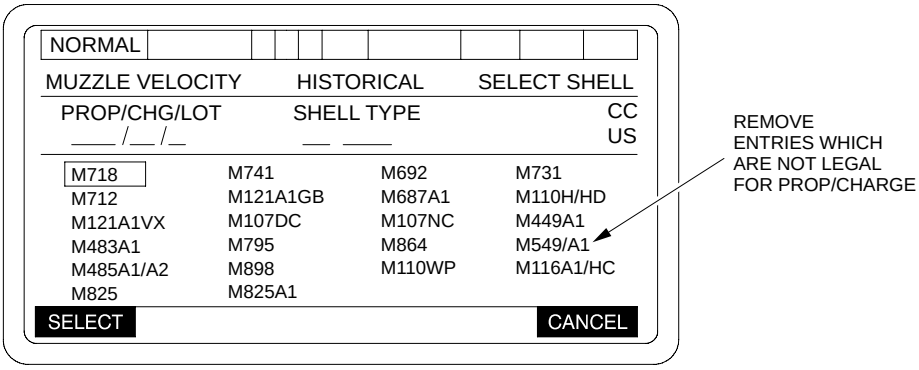


CANCEL : Return to DISPLAY MUZZLE VELOCITY SELECT PROP LOT display

SELECT : Will return to MUZZLE VELOCITY ENTER VELOCITY display

06pc151t

# 2-15 AFCS FIRE MISSION - CONTINUED

## 2-15.7 System Menus - Continued

2-15.7.13 Muzzle Velocity - Continued

e. Enter VELOCITY by typing in measured velocity and pressing ENT key. This will also return the display to the SETUP AND INFORMATION menu.

f. The muzzle velocities entered as historical are the average velocities calculated during calibration.

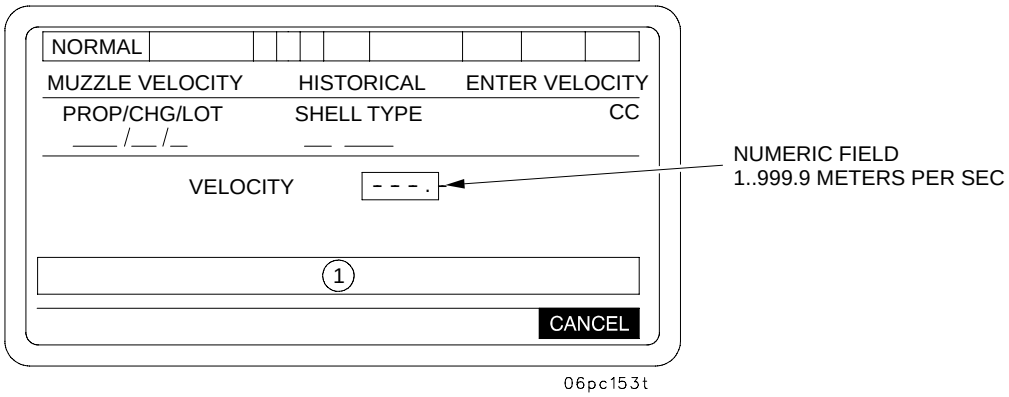


1 WHEN VELOCITY SELECTED OR WHEN NO PROP TEMP ENTRY ALLOWED:

TYPE VELOCITY
-PRESS ENT KEY-

### NOTE

- If MVV table is full or if more than 2 entries for a given projectile family/propellant combination are attempted, then a short error message "ERROR-SHELL/RPOP LIMIT" will be generated.
- If the computed velocity variance is outside legal limits, then a short error message "ILLEGAL VELOCITY VALUE" will be generated.

# 2-15 AFCS FIRE MISSION - CONTINUED

## 2-15.7 System Menus - Continued

2-15.7.13 Muzzle Velocity - Continued

g. To delete muzzle velocities, box in DELETE VELOCITY DATA from the Muzzle Velocity screen.

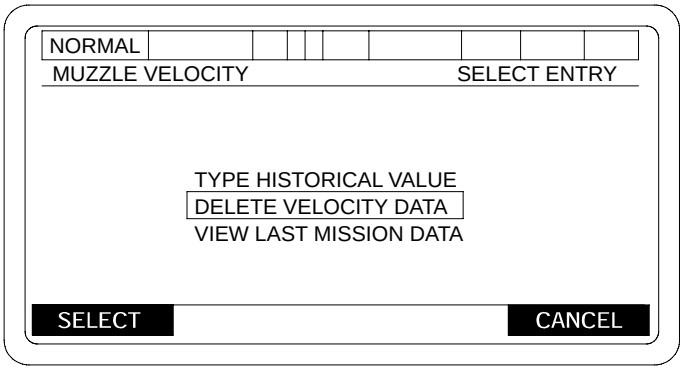


06pc207m

h. To delete muzzle velocity by propellant lot box in DELETE BY PROPELLANT LOT and press SELECT.

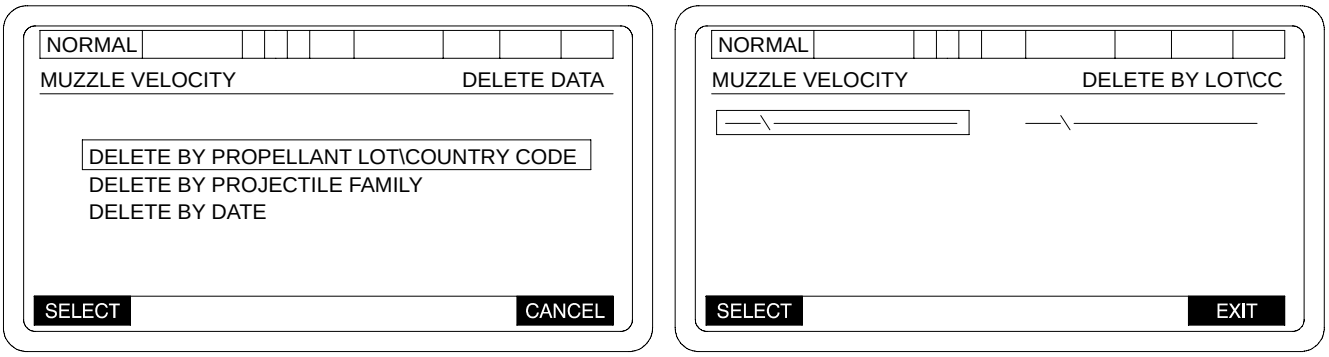


06pc154t

Lots are displayed only for those propellants not used in the current ammunition inventory. When SELECT key is pressed, a short error message “DELETE VELOCITY DATA” “YES” “NO” will be shown and CANCEL will be displayed on initial entry. EXIT will be displayed once a lot has been deleted. Selecting YES causes the velocity data for the selected propellant lot to be deleted. Selecting NO allows re-selection of a propellant family. When data is being retrieved and sorted you will receive the following message:

“RETRIEVING LIST PLEASE WAIT”

If no lots are available for deletion, the SELECT key will be blanked. You will have a CANCEL at soft key 4 and the message “NO LOTS TO DELETE” will be displayed.

# 2-15 AFCS FIRE MISSION - CONTINUED

## 2-15.7 System Menus - Continued

2-15.7.13 Muzzle Velocity - Continued

i. To delete muzzle velocity by projectile family, box in DELETE BY PROJECTILE FAMILY and press SELECT.

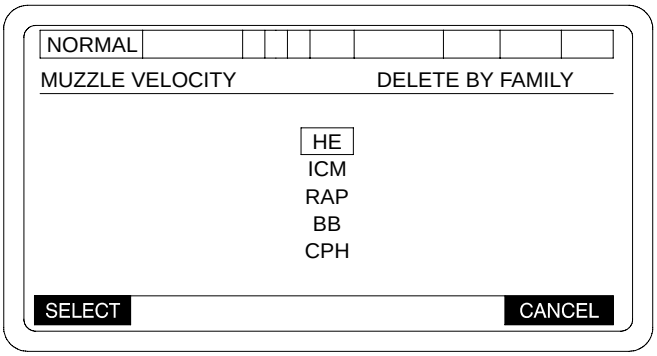


06pc155t

When the SELECT key is pressed, a short error message "DELETE VELOCITY DATA" "YES" "NO" will be shown and CANCEL will be displayed. Selecting YES causes the velocity data to be deleted. Selecting NO allows re-selection. EXIT will be displayed once a projectile family has been deleted.

All Family selections shall be displayed on iniital entry to this menu. Once a family has been deleted, its selection entry is removed from the menu.

j. To delete muzzle velocity by the date box in DELETE BY DATE and press SELECT.

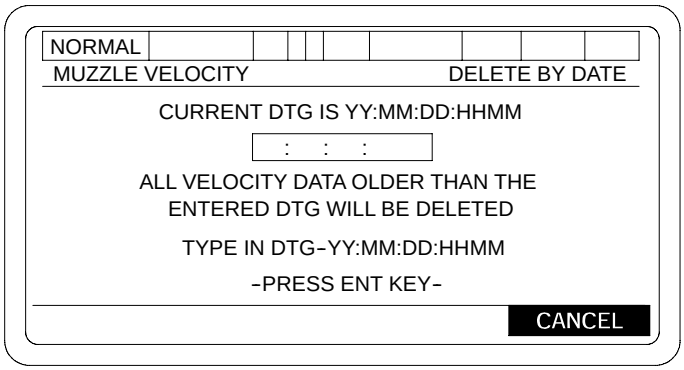


06pc211m

**NOTE**

When ENTER key is pressed a validity check is performed on the entered Date/Time. If the Date/Time data is invalid, you will receive a short error message: "INVALID DATE/TIME DATA" "ACK" You will be required to enter a new Date/Time value. If the Date/Time data is valid, you will receive a short error message: "DELETE VELOCITY DATA" "YES" "NO." YES causes all velocity data older than the entered DTG to be deleted. NO allows re-entry of the DTG.

# 2-15 AFCS FIRE MISSION - CONTINUED

## 2-15.7 System Menus - Continued

2-15.7.13 Muzzle Velocity - Continued

k. To view last mission velocity data, box in VIEW LAST MISSION DATA from the Muzzle Velocity screen.

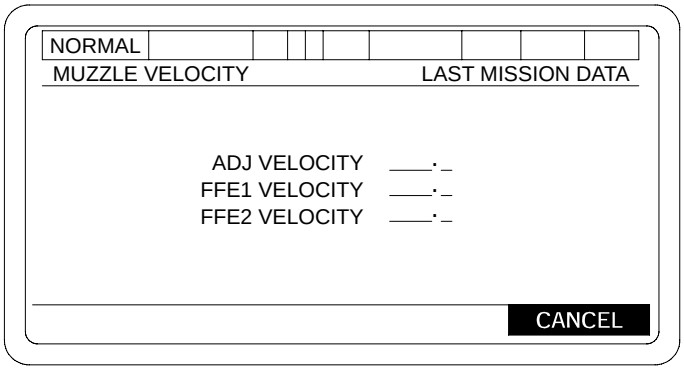


06pc212m

2-15.7.14 Muzzle Velocity Variance (MVV).

To set the number of rounds that will be used in calculating muzzle velocity variances, select the MVV ROUNDS from the SETUP AND INFORMATION screen.

NOTE: 1. The entry field will display the current MVV rounds selected and will default to 4 on systems initilization.

2. To use the MVV, you must have an extended lot code in the AFCS inventory.

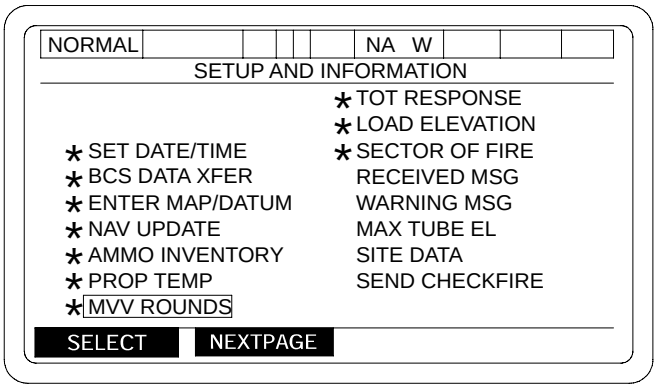


06pc611m

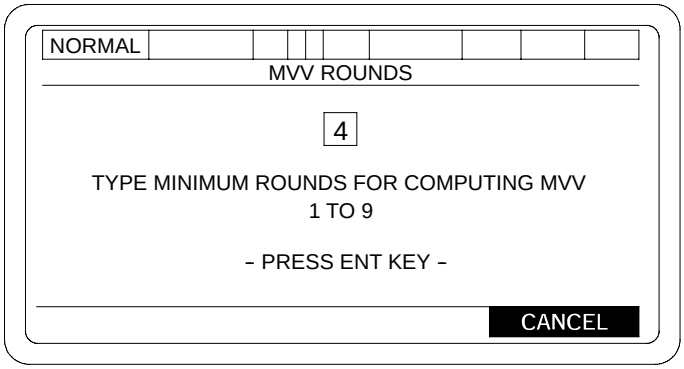


06pc610m

# 2-15 AFCS FIRE MISSION - CONTINUED

## 2-15.7 System Menus - Continued

2-15.7.15 Operational Maintenance Transition.

The AFCS will provide the capability for the AFCS operator to transition from NORMAL OPERATIONAL MODE functions to MAINTENANCE MODE functions and back to NORMAL OPERATIONAL MODE without having to POWER DOWN, perform SYSTEM RESTART, or perform NORMAL OPERATIONAL MODE initialization procedures. This capability will only be available when the AFCS has successfully completed an NORMAL OPERATIONAL MODE initialization. Selection of the MAINTENANCE MODE from the AFCS MODE SELECTION display will not allow the AFCS operator to transition to NORMAL OPERATIONAL MODE without first having to POWER DOWN, perform SYSTEM RESTART, or do a NORMAL OPERATIONAL MODE "INITIALIZATION" procedure.

When MAINTENANCE MODE functions are selected from the AFCS NORMAL OPERATIONAL MODE, the PDIU will be directed to limit instructive testing to only respond to Fire Mission requests. When MAINTENANCE MODE is entered from the AFCS SELECT OPERATIONAL MODE display, the PDIU will be allowed to perform its full range of intrusive tests.

If a Fire Mission is received while the AFCS is in a MAINTENANCE MODE function which was activated from the NORMAL OPERATIONAL MODE, the operator will be prompted to either accept or reject the mission. NORMAL OPERATIONAL acceptance of the mission will automatically terminate all MAINTENANCE MODE function activity and transition to NORMAL OPERATIONAL MODE Fire Mission processing. Operator rejection of the mission will cause an operator ABORT of the Fire Mission and will cause the AFCS to remain in the currently active MAINTENANCE MODE function.

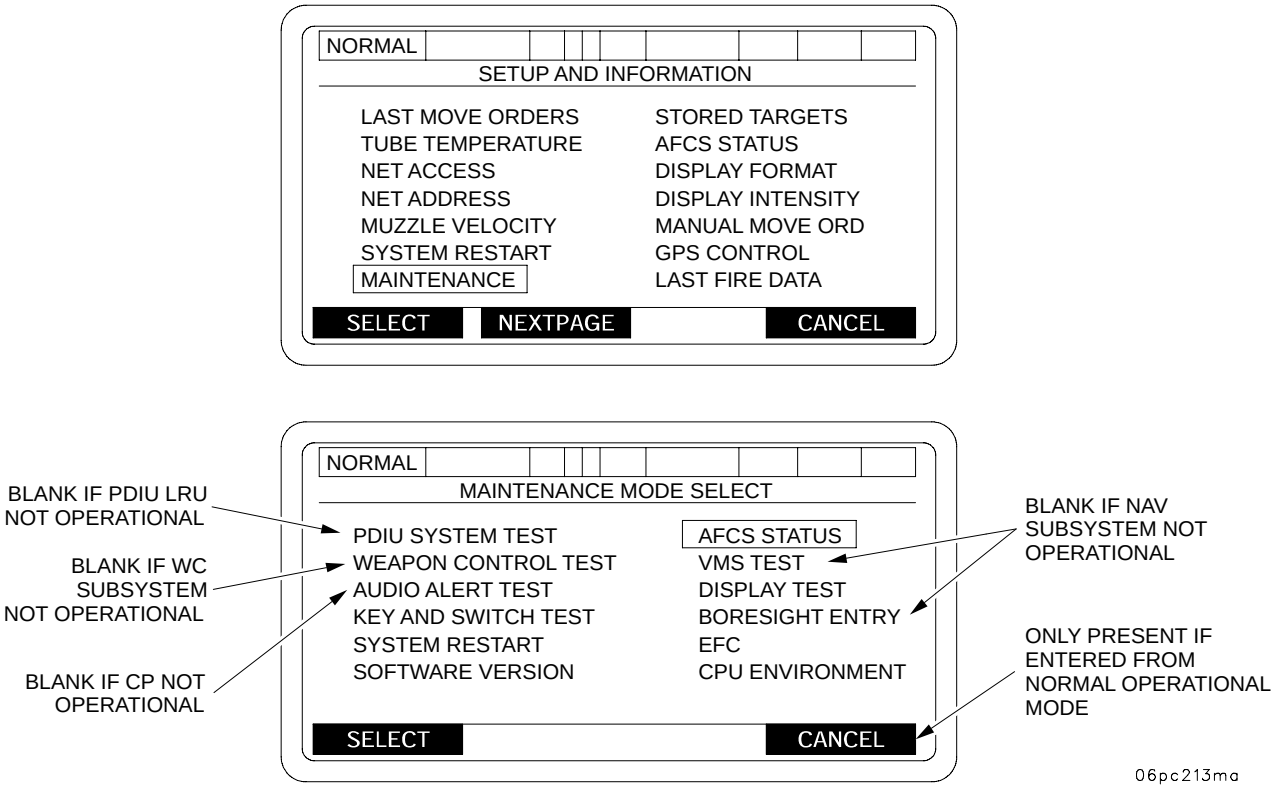

# 2-15A OPERATION OF PALADIN DIGITAL FIRE CONTROL SYSTEM (PDFCS).

## 2-15A.1 PDFCS Operating Modes.

PDFCS has two operational modes: Fire Control (FC) and Force XXI Battle Command Brigade and Below (FBCB2), each of these is as discussed below. Since the primary function of PDFCS is Fire Control, the terms “PDFCS” and “FC” are often used interchangeably. Since the primary function of FBCB2 is Situational Awareness (SA), the terms “FBCB2” and “SA” are often used interchangeably.

2-15A.1.1 FC Mode refers to the PDFCS functionally to provide for fire control net connectivity, FC unit commands, fire mission messages, and Paladin system controls. The PDFCS has automatic mode control for FC mode to automatically take charge of the display upon receipt of a FC message. The operator has the capability to switch between FC and SA modes of operations.

Fire Control functions are performed during three operating modes. These modes are Training, Normal Opertions, and Maintenance.

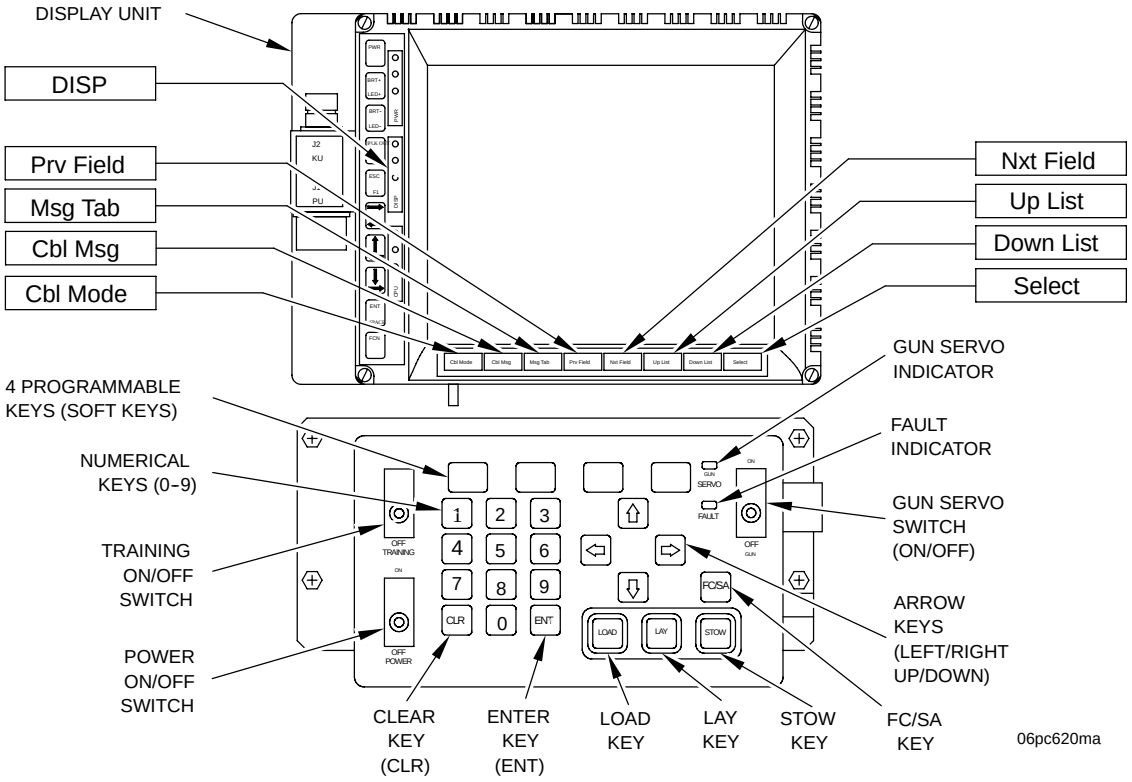


2-15A.1.1.1 Training Mode. The PDFCS has a Built-In Training Device (Embedded Trainer). This can be used as a tutorial device to train, maintain, improve, and evaluate crew efficiency/performance. This function allows for simulating Move and Fire Missions under a variety of battlefield scenarios. These include: Shoot Heavy, Move Heavy, Modified Balanced, as well as Degraded conditions for Fire Control, all without need for radio communications (PDFCS simulates all radio communications so training can be accomplished without POC assets). In addition, the Embedded Trainer can be run from a Beginner’s Tutorial option through a full scale scenario.

2-15A.1.1.2 Normal Operation Mode. During the normal operation mode, there are submodes which make up initializing the system navigation, emplacement, and firing the howitzer. These submodes are initialization, travel, and fire mission.

# 2-15A OPERATION OF PALADIN DIGITAL FIRE CONTROL SYSTEM (PDFCS).

## 2-15A.1 PDFCS Operating Modes - Continued

2-15A.1.1.3 Maintenance Mode. This mode is designed to be used by the crew to do initial troubleshooting of a failure in the PDFCS, isolate to an LRU and expedite repair, and view detailed software configuration information for each LRU/CPCI.

**NOTE**

In the SA mode, M109A6 crews should not respond to either of the following FBCB2 message alerts:

- Fire Mission
- Check Fire

These messages should only be acted upon when received in the Fire Control (FC) mode.

2-15A.1.2 FBCB2 (SA) mode refers to Situational Awareness and Command and Control (C2) operations provided by FBCB2. This mode provides connectivity to the Tactical Internet, a constantly updated SA picture (friendly and reported enemy/other positions, danger areas and obstacles), FBCB2 system controls as well as report, alert, planning, overlay, logistic, coordination and fire support messages.

# 2-15A OPERATION OF PALADIN DIGITAL FIRE CONTROL SYSTEM (PDFCS).

## 2-15A.2 PDFCS Operating Controls and Indicators

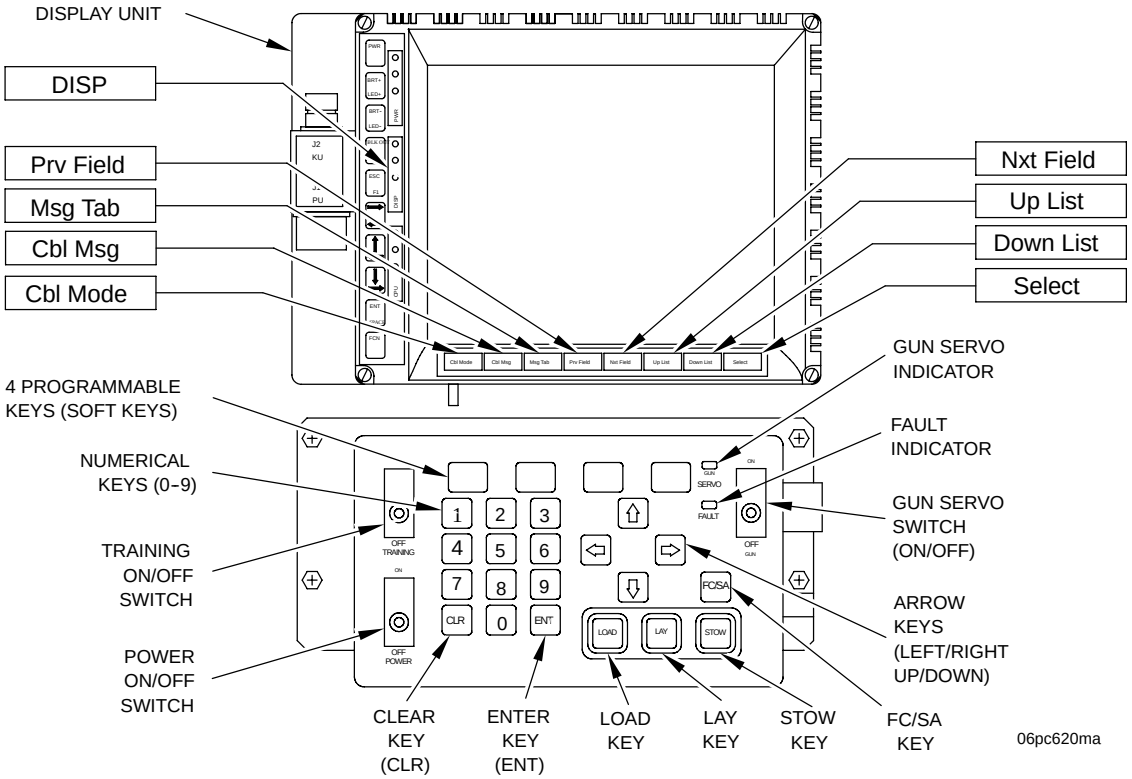


a. GUN SERVO Indicator Lamp. This amber indicator lamp will come on only during PDFCS movement of the weapon. Additionally, the lamp stays on when the servos position the weapon on command LAY.

b. GUN SERVO ON/OFF Switch. This toggle switch enables gun servo units. Lifting guard and placing switch in ON position allows PDFCS to control gun servo valves. (This is required for Gun Laying by PDFCS, also needed for STOW and LOAD commands by PDFCS.) Closing switch guard will automatically place switch in OFF position.

c. Arrow Keys (up/right/down and left). Pressing proper key will move highlighted area of display on PDU.

# 2-15A OPERATION OF PALADIN DIGITAL FIRE CONTROL SYSTEM (PDFCS) - CONTINUED

## 2-15A.2 PDFCS Operating Controls and Indicators - Continued

d. FAULT Indicator Lamp. This indicator lamp will come on when a failure has been detected by internal BIT of PDFCS.

e. STOW Key. With GUN switch ON, pressing STOW key will automatically return gun to a position above the travel lock. (Final tube positioning to secure gun in travel lock must be done with gunner's/COS control handles.)

f. LAY Key. With GUN switch ON, pressing LAY key will automatically drive gun to Commanded (CMD) position by PDFCS (in proper azimuth and elevation).

g. LOAD Key. With GUN switch ON, pressing LOAD key during high firing angles will automatically return gun to a preselected low elevation angle. This allows easier loading of gun.

(1) During Fire Mission. Pressing LOAD key during a Fire Mission will return gun to preselected load elevation and traverse gun to LAY position.

(2) Prior to Fire Mission. Pressing LOAD key prior to a Fire Mission (Section in Order) will return gun to preselected load elevation and traverse to Final Protective Fire (FPF) azimuth.

**NOTE**

If there is no FPF, the gun will traverse to the assigned center sector of fire.

h. KEYPAD (Numerals 0 through 9, CLR--clear, and ENT--enter keys). These keys are used for entering data. The CLR key is used to delete a numeric entry within the cursor field on the display. The ENT key is used to insert a numeric entry into highlighted field on the display.

**NOTE**

If PDFCS POWER is switched to OFF, alignment data will have to be reentered at next power up. Navigation Restart is a 15-minute procedure. Closing switch guard will not place this switch in OFF position. Switch must be manually put in OFF position.

i. POWER ON/OFF Switch. Lifting the guard and placing switch in ON position powers up PDFCS. System will then automatically perform self-test (BIT). After BIT, PDFCS will control gun hydraulics when GUN ON/OFF switch is ON. At this time, some gun movement may occur. Do not power down PDFCS when entering/exiting different modes. After PDFCS has been powered down, the PDFCS will power up and be operational in approximately 3-4 minutes.

j. TRAINING ON/OFF Switch. Lifting the guard and placing switch in ON position while PDFCS is at the select operating mode menu allows operator to select Training Mode. (To exit Training Mode, either finish scenario and exit via appropriate soft key, or place TRAINING ON/OFF switch to OFF and select appropriate soft key to exit.)

k. Soft Keys (four). Function of keys depends on menu being displayed (worked). Lowest display line identifies function.

l. FC/SA Key. This key is used to toggle the display between PDFCS (FC) and FBCB2 (SA) modes.

# 2-15A OPERATION OF PALADIN DIGITAL FIRE CONTROL SYSTEM (PDFCS) - CONTINUED

## 2-15A.2 PDFCS Operating Controls and Indicators - Continued

m. PDFCS Display Unit (PDU). The PDU displays both FC and SA screens. If the fire control screen is active, the FBCB2 screen can be activated by pressing the FC/SA key on the keypad. If the FBCB2 screen is active, the fire control screen can be activated by pressing the FC/SA key on the keypad. If a user is viewing FBCB2, the display will automatically switch the FC screen if important fire control alerts occur. The PDFCS keypad buttons are disabled when FBCB2 is displayed. The PDFCS keypad is only used in conjunction with functions. All FBCB2 functions are performed using the touchscreen. When the FC screen is displayed, the format will show possible fire mission data fields, advisory messages, instructions and commands. The data fields in the FC screen are numbered as follows:

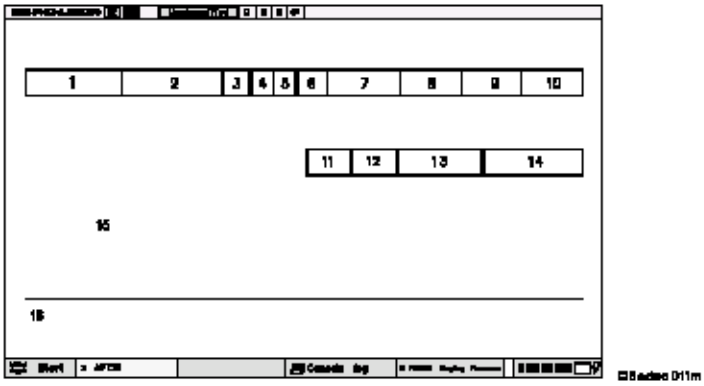


(1) Field 1, PDFCS Operational Mode - The following can appear:

NORMAL - This indicates that the NORMAL OPERATIONAL mode is selected.

EMB TNG - This indicates that the TRAINING mode is selected.

MAINT - This indicates that the maintenance mode is selected.

REV XX - This indicates system software version identifier. Shown only until an PDFCS mode selection is made.

(blank) - This indicates that the Fire Control software is undetermined.

(2) Field 2, FIRE MISSION STATUS - The following can appear:

CHKFIRE - This indicates that a checkfire status exists on the PDFCS. This message will appear in inverse video.

FIREMSN - This indicates that the PDFCS is performing a fire mission. This message will appear in inverse video.

(blank) - This indicates that the PDFCS is in normal operating status awaiting orders.

(3) Field 3, MOVE ORDER INDICATOR - The following data may appear.

MO - This indicates that the PDFCS has an active move order. This indicator will appear in inverse video.

(blank) - This indicates that there is no move order active.

# 2-15A OPERATION OF PALADIN DIGITAL FIRE CONTROL SYSTEM (PDFCS) - CONTINUED

## 2-15A.2 PDFCS Operating Controls and Indicators - Continued

(4) Field 4, WARNING MESSAGE INDICATOR -

W - If the letter W appears in inverse video a warning message has been queued.

(blank) - This indicates that there are no warning messages for the operator to view.

(5) Field 5, RECEIVED MESSAGE INDICATOR -

R - If the letter R appears in inverse video a received message has been queued.

(blank) - This indicates that there are no received messages for the operator.

(6) Field 6, ALIGN TIME TO GO INDICATOR - This three (3) character field indicates that the PDFCS is performing navigation alignment and should be complete in "nnn" (0...900) seconds or indicates that the PDFCS has initiated a command sequence with the Navigation Device. Following are the data that may appear in this field, in highest to lowest priority order:

ZPT - This indicates that the DRU has indicated a ZUPT Stop has been requested.

CMD - This indicates that the PDFCS has initiated a command sequence with the Navigation Device and the command sequence has not yet been completed.

POS - This indicates that the Navigation Device has requested a position update.

nnn - This three digit number indicates the number of seconds remaining before navigation alignment is complete. If the most significant digit is not the left most digit, the value will be padded with zeros on its left side.

(blank) - If the field is blank then the PDFCS is not undergoing navigational alignment.

(7) Field 7, FUNCTION STATUS - Indicates the status of the various PDFCS functions. The following data may appear in this field when in normal or training operational modes:

"NACW" - Each letter of this string indicates that a function is not available or non-operational. The letters represent the status of the following functions:

"N" - Navigation function

"A" - GPS Aiding function

"C" - Communications Function

"W" - Weapon Control Function

" " - Spare

(blank) - The absence of a letter indicates that the associated function is available.

(8) Field 8, LOAD KEY STATUS - this four (4) character field indicates the status of the load key. The following data may appear in this field:

LOAD - This indicates that the load key is active. If this field is highlighted, it indicates that the tube is within the load elevation.

(blank) - This indicates that the load key is inactive.

# 2-15A OPERATION OF PALADIN DIGITAL FIRE CONTROL SYSTEM (PDFCS) - CONTINUED

## 2-15A.2 PDFCS Operating Controls and Indicators - Continued

(9) Field 9, LAY KEY STATUS - This three (3) character field indicates the status of the LAY key. The following may appear in this field:

LAY - This indicates that the LAY key is active. If this field is highlighted, it indicates that the tube is at the latest LAY commands.

(blank) - This indicates that the LAY key is inactive.

(10) Field 10, STOW KEY STATUS - This three (3) character field indicates the status of the STOW key. The following data may appear in this field:

STOW - This indicates that the STOW key is active. If this field is highlighted it indicates that the tube is within the STOW position.

(blank) - This indicates that the STOW key is inactive.

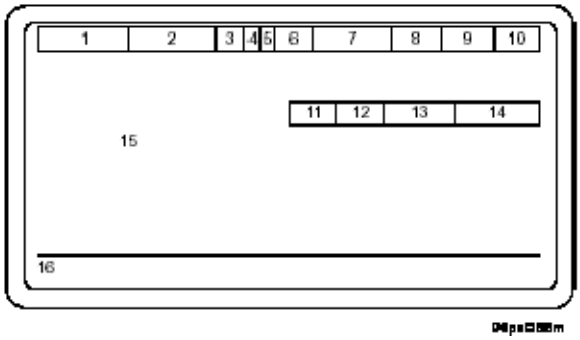


(11) Field 11, Mission Priority - The following may appear:

FPF - This indicates that the mission is a Final Protective Fire mission.

PRI - This indicates that the mission is a Priority mission.

(blank) - This indicates that the mission is a Normal mission.

(12) Field 12, Mission Urgency - The following may appear:

DC - This indicates that the mission has an associated Danger Close status.

TOT - This indicates that the PDFCS is processing a Time On Target fire mission.

(blank) - This indicates that the PDFCS has Normal urgency for this mission.

(13) Field 13, Tube Temperature Status - One of the following three will appear:

COLD - This indicates that the tube temperature is in a cold status.

WARM - This indicates that the tube temperature is in a warm status.

HOT - This indicates that the tube temperature is in a hot status.

(blank) - This indicates that the tube temperature is not available.

# 2-15A OPERATION OF PALADIN DIGITAL FIRE CONTROL SYSTEM (PDFCS) - CONTINUED

## 2-15A.2 PDFCS Operating Controls and Indicators - Continued

(14) Field 14, Safe Time in Tube Status - This indicates the current safe time for a round to be in the tube. The time is shown in minutes; refer to para 2-17d. When the tube is cold, this indicator is blank to indicate that there is no limit on the safe time in the tube.

(15) Field 15, Various instructions and warnings will appear in this area, as necessary. Some of the advisory messages and/or instructions displayed in field 15 are listed below:

Instructions and warnings which could appear on the FIRE MISSION DISPLAY:

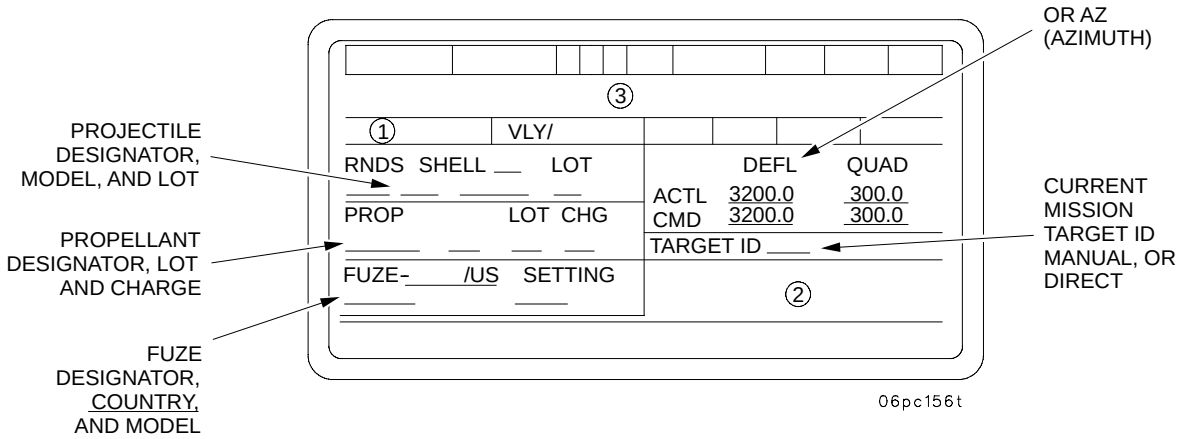


Listed below are the legal values for each field of fire mission display.

VLY / = current volley being displayed: 1/1, 1/2 or 2/2

**NOTE**

The 1/1, 1/2, and 2/2 data shall not be displayed for operator initiated fire missions and missions that are in fire commands format.

RNDS = Number of rounds remainin to fire 1..99
SHELL = Shell model and mnemonic
SHELL LOT = A..Z
PROP = Propellant model
PROP LOT = A..Z
CHG = Propellant charge designator (see Table 2-1)
FUZE = Fuze model, Country and mnemonic
SETTING = Computed fuze setting, “PD” or “DELAY”
DEFL or AZ = 0.0..6399.9 mils
QUAD = -200.0+1600.0 mils
TARGET ID = Current mission target identification

# 2-15A OPERATION OF PALADIN DIGITAL FIRE CONTROL SYSTEM (PDFCS) - CONTINUED

## 2-15A.2 PDFCS Operating Controls and Indicators - Continued

(1) Blank field1 = Fire mission is not a sheaf
SHEAF PT = This gun is participating in a multigun sheaf
SHEAF a/s = This gun is conducting a single gun sheaf
where: a..Current aimpoint number; b..Number of sheaf points

**NOTE**

Some of the alerts listed below will result in a "OK TO SHOOT? YES, NO" short error message to the PDFCS operator.

(2) Blank field 2 = displayed when none of the following apply
REMEMBER TO UPDATE INVENTORY = Direct or manual fire mission and none of the following apply
WARNING TUBE IS NOT IN LAY POSITION = WC is operational and the tube is not in the lay window
TUBE MUST BE LAID MANUALLY = WC is not operational
CALL FDC IF ROUND IN TUBE = Awaiting tube clear and crew not authorized to fire
PRESS SHOT OR CLEAR TO ACK CEASELOAD = PDFCS has received a ceaseload request
SECTOR OF FIRE VIOLATION = Gun-target line is outside the defined sector of fire
SITE VIOLATION = Firing parameters violate defined mask
INSUFFICIENT AMMO SHELL/FUZE/PROP = Insufficient inventory quantities
INSUFFICIENT AMMO SHELL/FUZE = Insufficient inventory quantities
INSUFFICIENT AMMO SHELL/PROP = Insufficient inventory quantities
INSUFFICIENT AMMO FUZE PROP = Insufficient inventory quantities
INSUFFICIENT AMMO SHELL = Insufficient inventory quantities
INSUFFICIENT AMMO FUZE = Insufficient inventory quantities
INSUFFICIENT AMMO PROP = Insufficient inventory quantities
MAX TUBE EL EXCEEDED = Computed QE exceeds the defined maximum tube elevation.
MINIMUM QE VIOLATED = The Gun Tube has violated the minimum QE as entered by the PDFCS operator. Enter Minimum Firing QE Display.

(3) Blank field 3 indicates that none of the following apply
FIRE WHEN READY = Fire at will
UNDER VOICE ORDERS = Manual fire mission
COMPUTING DO NOT LOAD = PDFCS computing or waiting for operator response
DO NOT LOAD = Do not load mission
LOAD LAY THEN PRESS READY = At my command or Copperhead mission
WAIT FOR COMMAND = At my command after ready
WAIT XXX SECONDS = Time to fire mission or continuous interval mission
FIRE = Command to fire
FPF END OF MISSION = EOM of ceaseload during FPF
EARLY END OF MISSION = EOM received after load but before all rounds fired
CEASELOAD = Ceaseload received after load but before all rounds fired

# 2-15A OPERATION OF PALADIN DIGITAL FIRE CONTROL SYSTEM (PDFCS) - CONTINUED

## 2-15A.2 PDFCS Operating Controls and Indicators - Continued

Instructions and warnings which could appear on the SECTION IN ORDER DISPLAY are as follows.

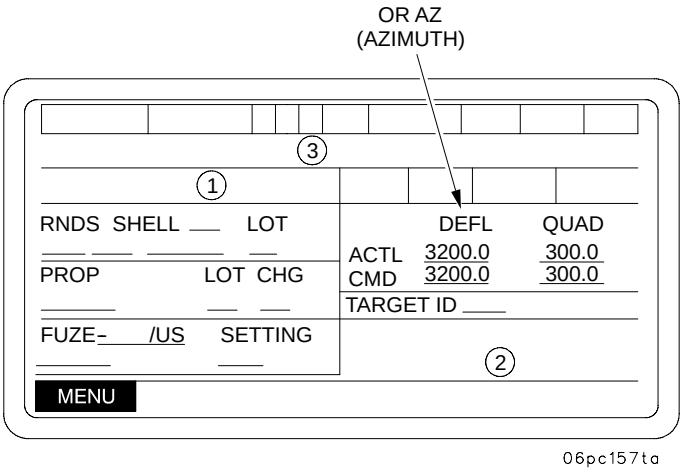


(1) Blank field 1, indicates that none of the following conditions apply:

COMPUTING FPF/PRI
NO FPF/PRI EXISTS
UNABLE TO COMPUTE
MASK TRAJ FAILURE
SECTOR VIOLATION
MASK VIOLATION
INSUFFICIENT AMMO
NO FUZE INVENTORY
NO PROJ INVENTORY
NO PROP INVENTORY
BAD PROJ LOT/MODEL
NO AMMO INV COMBO
INVALID AMMO COMBO
INSUFFICIENT RANGE
NO SOLUTION
NO FFE TYPE MISSION
UNASSIGNED FPF/PRI
BAD FPF/PRI LOC
TARGET TOO CLOSE
MAX TUBE EL EXCEEDED

## 2-15A OPERATION OF PALADIN DIGITAL FIRE CONTROL SYSTEM (PDFCS) - CONTINUED

### 2-15A.2 PDFCS Operating Controls and Indicators - Continued

(2) Instructions and warnings which could appear in field (2):

SECTION IN ORDER AT FIRE POINT
SECTION IN ORDER WITHIN FIRE AREA

(3) Instructions and warnings which could appear in field (3):

DO NOT MOVE/DO NOT LOAD
DO NOT MOVE
MOVES ALLOWED
MOVES ALLOWED DO NOT LOAD

**Table 2-1 Charge Displayed Based on Propellant Model**

| Charge Displayed | Based on propellant model |
|---|---|
| 3G, 4G, 5G | M3, M3A1, M3A1BG, M3C2, DM62 |
| 3G, 4G, 5G, 6G | MLE56 |
| 6W, 7W, 8W, 9W, 9BW | MLE69 |
| 3W, 4W, 5W, 6W, 7W | M4A1, M4A2, M4C3, M4C4, DM42, DM42B1, NM23 |
| 8 | M119A1, EBO-5 |
| 7R | M119A2, M119A2BG, NR13C1 |
| 8R | M203 |
| 8S | M203A1 |
| 1L, 2L | M231 |
| 3H, 4H, 5H | M232 |

# 2-15A OPERATION OF PALADIN DIGITAL FIRE CONTROL SYSTEM (PDFCS) - CONTINUED

## 2-15A.2 PDFCS Operating Controls and Indicators - Continued

(16) Field 16, Function Key Label - This block is used to identify the function of the four soft keys.

Soft key messages and task actions are also displayed in this area to give the PDFCS operator a means of keeping track of various PDFCS related actions during Fire Control operation. Typical messages are shown below:

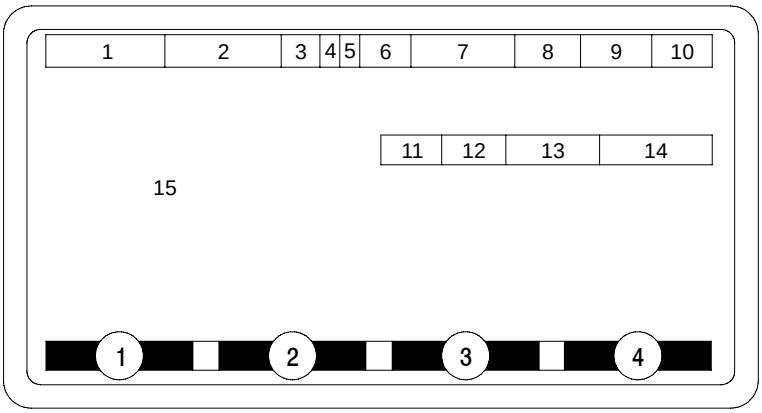


06pc088m

(1) Function Key 1, indicates what may appear in this field.
SELECT
NEXT MSG
+/-
MARK
ADJ
PREV
MENU
VERIFY
PREV

(2) Function Key 2, indicates what may appear in this field.
USE ALL
FINISHED
NEXT PAGE
+/-
FINISHED
USE LOCAL
FFE1
INVENTORY
ARRIVED
UPDATE EFC
CLEAR

(3) Function Key 3, indicates what may appear in this field.
CHECK
DELETE
YES
USE GPS
EMPLACE
STEERTO
FFE2
SEND
CLEAR
EXPECTED

(4) Function Key 4, indicates what may appear in this field.
CANCEL
ACK
EOM
NO
CONTINUE
MOVING
EXIT
ABORT

# 2-15A OPERATION OF PALADIN DIGITAL FIRE CONTROL SYSTEM (PDFCS) - CONTINUED

## 2-15A.2 PDFCS Operating Controls and Indicators - Continued

URGENT MESSAGE

"AFCS CHECKFIRED", "ACK"

HIGH PRIORITY MESSAGES

"GUN SW FAULT", "ACK"
"FIRE MISSION RECEIVED", "ACK"
"POWER FAILURE SHUTDOWN", "ACK"
"ON AUX POWER START VEHICLE", "ACK"
"AUX BATTERY NOT CONNECTED", "ACK"
"VEHICLE AND AUX POWER OK", "ACK"
"NAV OUT-NSP POWER UP BIT", "ACK"
"NAV EXCESSIVE RATE RESTART REQ", "ACK"
"ALIGN ABORTED RESTART REQD", "ACK"
"MAP UPDATED NAV UPDT REQUIRED", "ACK"
"MAP/NAV CONFLICT UPDATE NAV", "ACK"
"OVERIDE AZ LIMITS", "YES", "NO"
"NAV OUT-DRU BIT FAIL", "ACK"
"NAV OUT-DRU DISCONNECT", "ACK"
"NAV OUT-NSP DISCONNECT", "ACK"
"AUX POWER LOW", "ACK"
"FIRE MISSION RCVD", "ACCEPT", "REJECT"
"MAP DATUM UPDATE REQUIRED", "ACK"
"NAV OUT-DRU INERTIAL FAIL", "ACK"
"NAV OUT-DRU OP FAIL", "ACK"
"MOVE MISSION RECEIVED", "ACK"

LOW PRIORITY MESSAGES

"INVALID SOFTWARE CONFIGURATION", "ACK"
"NAV POS UPDATE REQUIRED", "ACK"
"NAV POS UPDATE NO LONGER REQ", "ACK"
"ZUPT REQUIRED", "ACK"
"ZUPT NO LONGER REQUIRED", "ACK"
"MOTION DURING POS UPDATE", "ACK"
"POS UPDATE INTERRUPTED", "ACK"
"POS UPDATE N/E EXCESSIVE", "ACK"
"POS UPDATE N/E RJTD", "ACK"
"POS UPDATE ALTITUDE EXCESSIVE", "ACK"
"POS UPDATE ALTITUDE RJTD", "ACK"
"NAV RESTART RJTD VEH MOVING", "ACK"

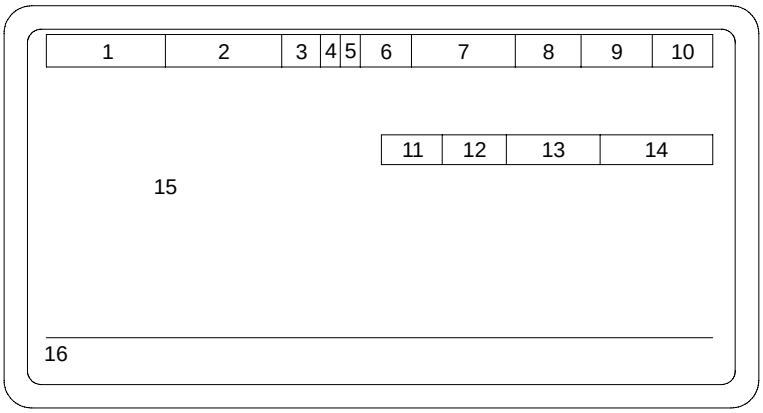


06pc088m

# 2-15A OPERATION OF PALADIN DIGITAL FIRE CONTROL SYSTEM (PDFCS) - CONTINUED

## 2-15A.2 PDFCS Operating Controls and Indicators - Continued

LOW PRIORITY MESSAGES - CONTINUED

"NET ADDR RJTD NEW SUBSBR FILE", "ACK"
"INVALID OPERATIONAL MODE", "ACK"
"NET CONFG UPDTE RJTD FM ACTIVE", "ACK"
"NET ADDR UPDTE RJTD FM ACTIVE", "ACK"
"NAV RESTART RJTD FM ACTIVE", "ACK"
"UPDATE RJTD WRONG NAV MODE", "ACK"
"AFCS COMMO OUT XMIT RJTD:, "ACK"
"CLOCK UPDATE RJTD FM ACTIVE", "ACK"
"NAV RESTART RJTD BAD POS", "ACK"
"WPN OUT", "ACK"
"WC SUBSYSTEM OUT", "ACK"
"TUBE TEMP SENSOR OUT", "ACK"
"COMMO OUT", "ACK"
"NETWORK COMMO OUT", "ACK"
"POS UPDATE RJTD BAD POS", "ACK"
"POS UPDATE RJTD HOWITZER MOVG", "ACK"
"POS UPDATE RJTD FM ACTIVE", "ACK"
"POS UPDATE RJTD VEH MOTION", "ACK"
"RESTART RJTD NAV OUT", "ACK"
"POS UPDATE RJTD WRONG NAV MODE", "ACK"
"NET BUSY AMMO", "RETRY", "NO RETRY"
"NET BUSY REQ AMMO", "RETRY", "NO RETRY"
"NET BUSY CHECKFIRE", "RETRY", "NO RETRY"
"NET BUSY DESIGNATE", "RETRY", "NO RETRY"
"NET BUSY FREE TEXT", "RETRY", "NO RETRY"
"NET BUSY VEH STS", "RETRY", "NO RETRY"
"NET BUSY REQ VEH STS", "RETRY", "NO RETRY"
"NET BUSY REQ INIT", "RETRY", "NO RETRY"
"NET BUSY SITE DATA", "RETRY", "NO RETRY"
"NET BUSY REQ SITE", "RETRY", "NO RETRY"
"NET BUSY REQ MOV ORD", "RETRY", "NO RETRY"
"NET BUSY MTO TOF", "RETRY", "NO RETRY"
"NET BUSY MTO DENY", "RETRY", "NO RETRY"
"POSITION UPDATE RJTD NAV OUT", "ACK"
"NET BUSY REQ MVV", "RETRY", "NO RETRY"
"NET BUSY MVV", "RETRY", "NO RETRY"

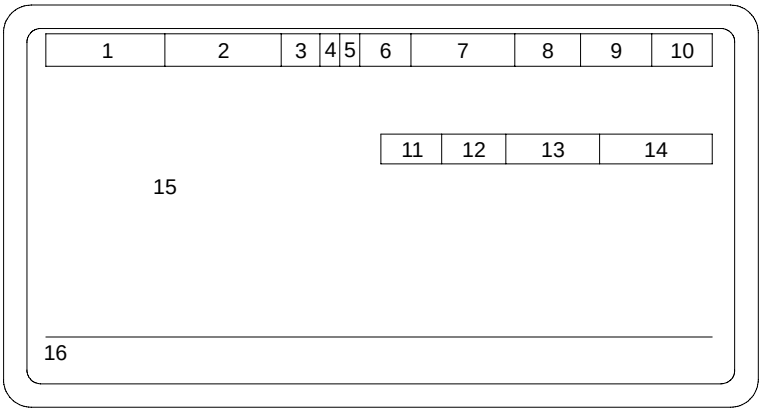


06pc088m

# 2-15A OPERATION OF PALADIN DIGITAL FIRE CONTROL SYSTEM (PDFCS) - CONTINUED

## 2-15A.2 PDFCS Operating Controls and Indicators - Continued

LOW PRIORITY MESSAGES - CONTINUED

"NET BUSY READY", "RETRY", "NO RETRY"
"NET BUSY ROUND COMP", "RETRY", "NO RETRY"
"NET BUSY SHOT", "RETRY", "NO RETRY"
"NET BUSY SPLASH", "RETRY", "NO RETRY"
"NET BUSY TARGET FILE", "RETRY", "NO RETRY"
"NET BUSY UTE BAT", "RETRY", "NO RETRY"
"NO ACK AMMO", "RETRY", "NO RETRY"
"NO ACK REQ AMMO", "RETRY", "NO RETRY"
"NO ACK CHECK FIRE", "RETRY", "NO RETRY"
"NO ACK DESIGNATE", "RETRY", "NO RETRY"
"NO ACK FREE TEXT", "RETRY", "NO RETRY"
"NO ACK VEH STS", "RETRY", "NO RETRY"
"NO ACK REQ VEH STS", "RETRY", "NO RETRY"
"NO ACK VEH INIT", "RETRY", "NO RETRY"
"NO ACK SITE DATA", "RETRY", "NO RETRY"
"NO ACK REQ SITE DATA", "RETRY", "NO RETRY"
"NO ACK REQ MOVE ORD", "RETRY", "NO RETRY"
"NO ACK MTO TOF", "RETRY", "NO RETRY"
"NO ACK MTO DENY", "RETRY", "NO RETRY"
"NO ACK MVV", "RETRY", "NO RETRY"
"NO ACK REQ MVV", "RETRY", "NO RETRY"
"NO ACK READY", "RETRY", "NO RETRY"
"NO ACK ROUND COMP", "RETRY", "NO RETRY"
"NO ACK SHOT", "RETRY", "NO RETRY"
"NO ACK SPLASH", "RETRY", "NO RETRY"
"NO ACK TARGET FILE", "RETRY", "NO RETRY"
"NO ACK UTE BAT", "RETRY", "NO RETRY"
"PDI WARNING RECEIVED", "ACK"

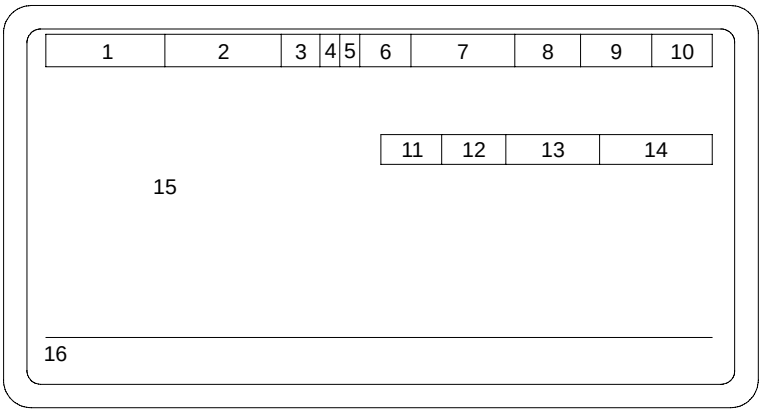


06pc088m

# 2-15A OPERATION OF PALADIN DIGITAL FIRE CONTROL SYSTEM (PDFCS) - CONTINUED

## 2-15A.2 PDFCS Operating Controls and Indicators - Continued

LOW PRIORITY MESSAGES-CONTINUED

"PROP TEMP UPDATE PENDED", "ACK"
"AMMO INVENTORY UPDATE PENDED", "ACK"
"SITE DEFINITION UPDATE PENDED", "ACK"
"DIRECT FIRE RJTD NAV NOT INIT", "ACK"
"DIRECT FIRE RJTD WPN OUT", "ACK"
"DIRECT FIRE RJTD OUTSIDE MAP", "ACK"
"DIRECT FIRE RJTD MAP PENDING", "ACK"
"DIRECT FIRE RJTD IN CHECKFIRE", "ACK"
"DIRECT FIRE RJTD FM ACTIVE", "ACK"
"MANUAL COMMANDS RJTD FM ACTIVE", "ACK"
"MANUAL COMMANDS RJTD CHECKFIRE", "ACK"
"SIMULATED NAV FAILURE", "CLEAR"
"SIMULATED ELECTRICAL FAILURE", "CLEAR"
"SIMULATED HYDRAULIC FAILURE", "CLEAR"
"SIMULATED COMMO FAILURE", "CLEAR"
"SIMULATED WPN FAILURE", "CLEAR"
"SIMULATED NAV FAILURE", "ACK"
"SIMULATED ELECTRICAL FAILURE", "ACK"
"SIMULATED HYDRAULIC FAILURE" , "ACK"
"SIMULATED COMMO FAILURE", "ACK"
"SIMULATED WPN FAILURE", "ACK"
"SIMULATED FAILURES CLEARED", "ACK"
"MOVE RJTD DEST NOT IN MAP", "ACK"
"MOVE RJTD NO MAP", "ACK"
"MOVE RJTD MAP PENDING", "ACK"
"PRESS ACK WHEN TUBE STOWED", "ACK"
"VEHICLE MOTION SENSOR OUT", "ACK"

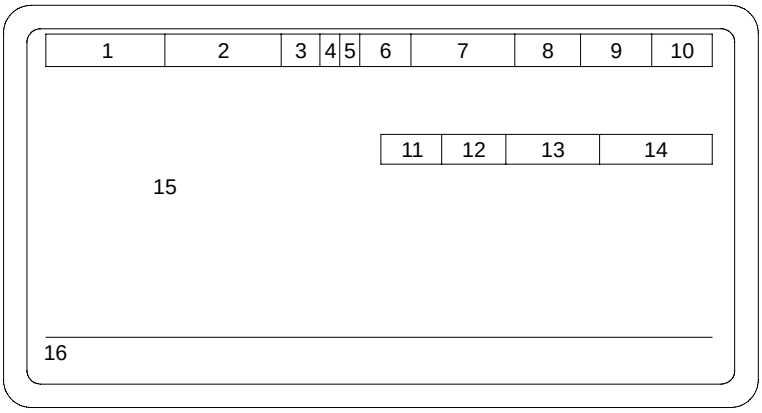


06pc088m

# 2-15A OPERATION OF PALADIN DIGITAL FIRE CONTROL SYSTEM (PDFCS) - CONTINUED

## 2-15A.2 PDFCS Operating Controls and Indicators - Continued

LOW PRIORITY MESSAGES-CONTINUED

"PDI OUT OR PDI BUS OUT", "ACK"
"DIRECT FIRE RJTO TGT COMP ERR", "ACK"
"NO BALLISTIC SOLUTION", "ACK"
"PROP TEMP UPDATE REQURIED", "ACK"
"VEHICLE MOTION SENSOR GOOD", "ACK"
"DRU OVERTEMP", "ACK"
"DRU NO LONGER OVERTEMP", "ACK"
"ZONE BOUNDARY CROSSED", "ACK"
"OK TO MOVE OR SHOOT", "ACK"
"FIRE CONTROL ALIGN REQUIRED", "ACK"
"EMBEDDED TRAINING OUT", "ACK"
INVALID SOFTWARE CONFIGURATION", "ACK"
MVS OUT OR MVS BUS OUT", "ACK"
MVV DATABASE ALMOST FULL", "ACK"
MVV DATABASE FULL DATA LOST", "ACK"
"GPS OUT - PLGR DISCONNECT", "ACK"
"GPS CONNECTED", "ACK"
"GPS OUT - PLGR FAILED", "ACK"
"GPS OPERATIONAL", "ACK"
"GPS ANTENNA FAULT", "ACK"
"GPS ANTENNA OK", "ACK"
"PLGR UNKEYED", "ACK"
"INP/GPS DELTA TOO LARGE", "ACK"
"INP/GPS N/E EXCESSIVE", "ACK"
"INP/GPS N/E REJECTED", "ACK"
"INP/GPS ALT EXCESSIVE", "ACK"
"INP/GPS ALT REJECTED", "ACK"
"POSITION UPDATE BEYOND ZONE", "ACK"
"BORESIGHT UPDT RJTD VEH MOVING", "ACK"
"RESTART REQUIRED", "ACK"
"POSITION UPDATE REQUIRED", "ACK"
"DRU CONNECT", "ACK"
"INSUFFICIENT Y CODE SVS", "ACK"
"MINIMUM QE VIOLATED", "ACK"
"MINIMUM QE NO LONGER VIOLATED", "ACK"
"CHK DATABASE BAD DATA DETECTED", "ACK"
"DUPLICATE IP ADDR", "ACK"
"DUPLICATE IP ADDR SUBFIELD 4", "ACK"
"DUPLICATE URN", "ACK"
"DUPLICATE ADDRESS", "ACK"
"SHUTDOWN TO RE-ENABLE COMMO", "ACK"
"REUSED AFCS IP - POWERDOWN REQ", "ACK"

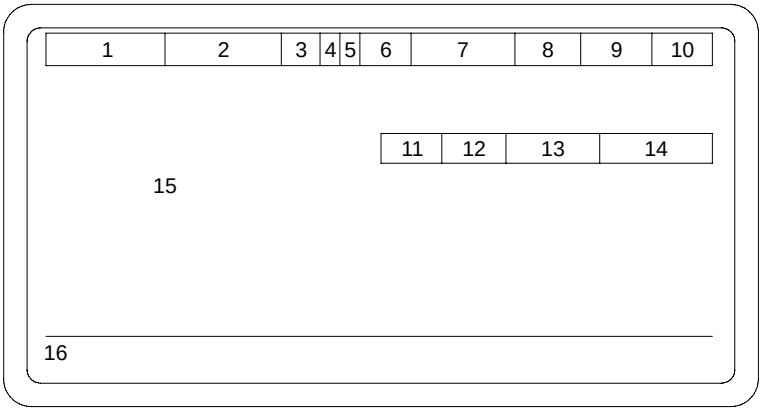


06pc088m

# 2-15A OPERATION OF PALADIN DIGITAL FIRE CONTROL SYSTEM (PDFCS) - CONTINUED

## 2-15A.3 DC Power Messages.

Three Auxiliary Power messages can appear on any menu being displayed on the PDU. Operator actions for any message will be the same regardless of the menu on which it is displayed.

2-15A.3.1 On Auxiliary Power. If vehicle battery voltage drops to a point below that needed by the Power Conditioner Unit (PCU-2) to operate the PDFCS, the PCU-2 will automatically switch to auxiliary power (backup batteries) to maintain PDFCS operation. When the switch to auxiliary power occurs, an audible alert will be sounded over the intercom, and a visual alert will be displayed at the bottom of the menu.

**CAUTION**

Prolonged operation on auxiliary power may cause the PDFCS to shut down automatically.

At this time, the vehicle engine must be started to recharge the vehicle batteries.

The operator must press the soft key under ACK to silence the audible alarm and eliminate the message.

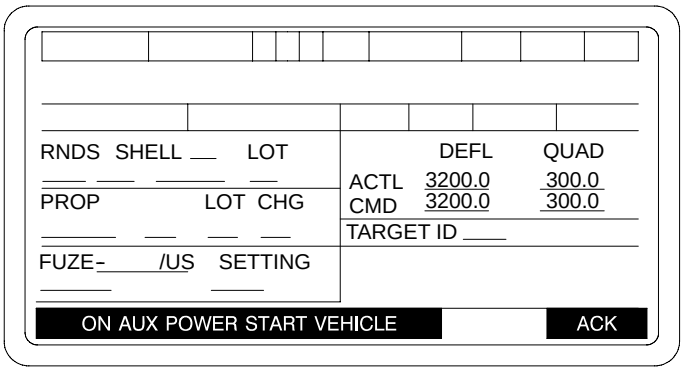


06pc157t

# 2-15A OPERATION OF PALADIN DIGITAL FIRE CONTROL SYSTEM (PDFCS) - CONTINUED

## 2-15A.3 DC Power Messages - Continued

2-15A.3.2 Auxiliary Power Not Available. If the auxiliary power batteries are not functional (e.g., low, damaged, or disconnected), a visual alert will be displayed at the bottom of the menu.

The operator must press the soft key under ACK to eliminate the message. At this time, the vehicle engine must be started and kept running to ensure PDFCS operation until auxiliary power is restored.

**NOTE**

This message can also appear during BIT.

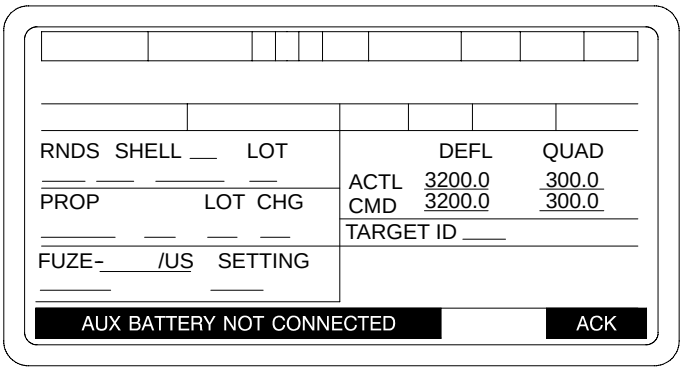


06pc158t

2-15A.3.3 Vehicle and Auxiliary Power OK. When the vehicle battery voltage rises sufficiently, the PCU-2 will automatically switch to vehicle power. When the switch occurs, a visual alert is displayed at the bottom of the menu as shown below.

The operator must press soft key under ACK to eliminate the message.

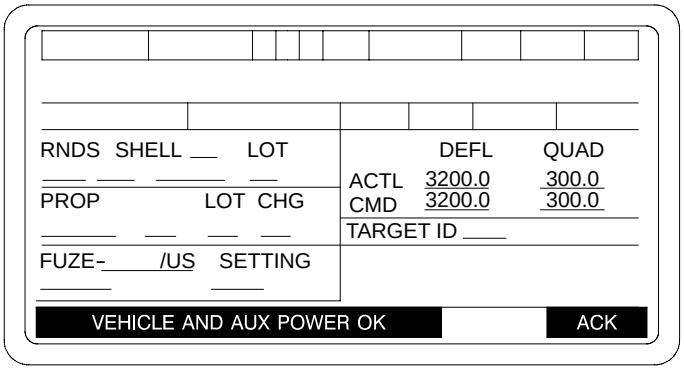


06pc159t

## 2-15B PDFCS INITIALIZATION.

### 2-15B.1 System Power-Up.

**WARNING**

When operating the PLGR on external power with BA-5800 lithium battery installed, the battery may explode. Ensure battery is removed before connecting power cable to prevent serious injury or death.

**NOTE**

- PMVS must be installed and connected prior to turning the vehicle MASTER power switch ON.
- PLGR should be installed and powered prior to turning on the DU of the PDFCS keypad in order for the PDFCS to use the PLGR data.
- The following steps must be completed prior to POWERING UP and INITIALIZATION of the PDFCS.

a. Outside the howitzer:
   1. Left front drive sprocket must be within 1 meter of SCP.
   2. Gun tube in travel lock.
   3. PMVS connections verified.
   4. FM VOICE/DIGITAL Radio antennas are properly mounted, cables and ground connections verified.
   5. PLGR antenna cable connections verified.

b. Inside the howitzer:
   1. Turret lock in “LOCKED” position.
   2. 1553 BUS terminator connection verified.
   3. PLGR ground connection verified.
   4. PLGR installed.
   5. Set MASTER switch to ON.
   6. Ensure 10 PCU-2 switches are ON.
   7. Turn PLGR ON, FILL verified.
   8. Turn radios ON, and perform VOICE radio check.
   9. Idle engine at 1000 to 1200 RPMs.
   10. Make sure TRAINING switch on PDFCS keypad is OFF.

## 2-15B PDFCS INITIALIZATION.

### 2-15B.1 System Power-Up - Continued

With the PLGR in the PLGR mount and all external cables attached, press the ON/BRT key on the PLGR key pad. The PLGR should power up automatically and perform its self-test (BIT). Operate the PLGR in accordance with the PLGR TM 11-5825-291-13.

If the PLGR does not have a current key (i.e. the PLGR was previously “zeroized,” newly installed or the key has expired), then load a valid key in accordance with the PLGR TM 11-5825-291-13, Section 3.6.

**NOTE**

To load a key, the DRUH must be off, or the P4 DRUH-PLGR Signal Connector must be disconnected to cause a PLGR COM FAIL. Simple re-attachment of P4 DRUH-PLGR Signal Connector after PLGR keying will automatically cause DRUH-PLGR communications to resume if DRUH is on.

If the PLGR antenna has a clear view of the sky, turn PLGR on.

If the antenna’s view of the sky is blocked (e.g. the vehicle is in a building, under tree cover or parked next to a large structure), move vehicle until the PLGR antenna is clear.

If the vehicle can not be moved, keep PLGR turned off until the vehicle can be moved to a location with a clear view of the sky.

**NOTE**

- If the PLGR is off, the Navigation System will still accept initialization data from the PDFCS for inertial operation and the Navigation System will operate as before.
- Guidelines for conditions and times for the PLGR to obtain position data acceptable by the PDFCS.

c. If the antenna has a clear view of the sky and PLGR has a valid position, current GPS time, current GUV key, and has stored a current satellite almanac, PLGR will be acceptable for use in about 3 minutes following the first turn-on of the day. It will take about 90 seconds for subsequent turn-ons. These are the normal operating conditions.

d. If the antenna has a clear view of the sky and PLGR has a current GUV key but PLGR doesn’t have a valid position, current GPS time, or current satellite almanac, it may take up to 20 minutes after turn-on for the PLGR to output data of acceptable accuracy.

## 2-15B PDFCS INITIALIZATION - CONTINUED

### 2-15B.1 System Power-Up - Continued

e. If the PLGR has a valid position, current GPS time, current key, and current satellite almanac, but the antenna is masked from a clear view of the sky when PLGR is turned on, it may take up to 20 minutes to get acceptable data after the vehicle is moved to a location with a clear view of the sky. This results from the PLGR initiating a search for all possible satellites if it can't lock on to those expected, for its current position, time, and almanac, within a reasonable time interval.

f. If the PLGR doesn't have a current key, its data won't be acceptable for use by the PDFCS. However, assuming a clear view of the sky, it can be turned on to initialize position, time, and satellite almanac in about 20 minutes. Then when a valid key is located, the PLGR will be ready to go within three minutes.

**NOTE**

PMVS must be installed and connected prior to turning the vehicle MASTER power switch ON.

Make sure TRAINING switch on PDFCS keypad is OFF. Set circuit breaker on PDFCS CPU to ON. Press and hold POWER button to PDFCS PDU until LEDs illuminate. Set POWER switch on PDFCS keypad to ON. The normal PDFCS initialization screens will be displayed. In approximately 3 minutes the PDFCS window will open with a blank screen, followed by the POWER UP STATUS screen.

**NOTE**

- The time lapse between first three screens can range from 3 to 5 minutes.
- If screen stays blank for more than 7 minutes, power down system.

A SYSTEM VERIFICATION FAILURE screen may be displayed only if there is an incompatibility between hardware and software.

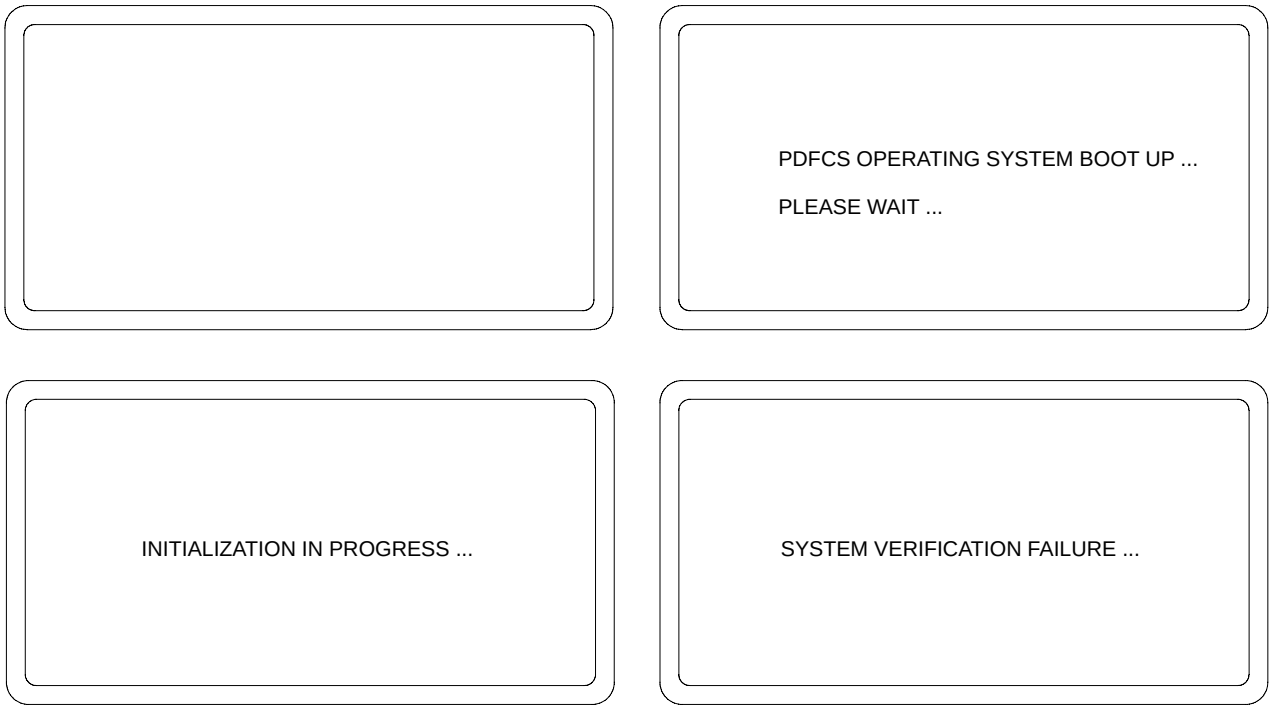


06pc414ma

## 2-15B PDFCS INITIALIZATION - CONTINUED

### 2-15B.1 System Power-Up - Continued

After the PDFCS powers up, the PLGR screen should read:

REMOTE CONTROL
Only ZEROIZE key
activated

At this point the PLGR key pad will become inactive. The only PLGR operation allowed using the key is EMERGENCY ZEROIZE.

If this message is not displayed on the PLGR screen, and the Low Priority Message “GPS OUT - PLGR DISCONNECTED” is not displayed on the PDU, ensure that the DRUH-PLGR Signal Connector (P4) plug on the W17A Cable is connected and secure. Once this PLGR screen is displayed, proceed with system initialization.

**NOTE**

- NAV SUBSYSTEM includes: VMS, DRUH, VMS Modems
- PCU-2 SUBSYSTEM includes: PCU-2 and both Back-up Batteries.
- The switches on the PCU-2 are circuit breakers. They should be left ON at all times, so they will not wear out from being turned off and on constantly.

This screen displays the subsystems that are checked by BIT. As the subsystems are checked, the dashed lines will change to a subsystem status (OK, DEGRADED, OUT, - - ). The - - appears on the MVS status line when the PDFCS could not be connected to the MVS. This screen also identifies the system software version.

**NOTE**

PCU and PCU-2 are used interchangeably when viewing PDFCS software screens. PCU will appear in the software screens. PCU-2 will be used in the text portion of this technical manual when referring to the physical equipment.

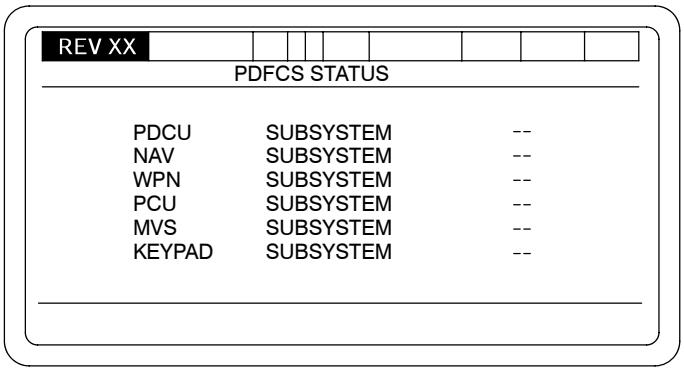


06pc071ma

# 2-15B PDFCS INITIALIZATION - CONTINUED

## 2-15B.1 System Power-Up - Continued

In the event of a failure during POWER UP STATUS, the message “DEGRADED - ACK TO CONTINUE” will be displayed on the bottom line of the PDU. To continue, depress soft key under ACK. After the self-test is complete, SELECT OPERATIONAL MODE menu is displayed.

**NOTE**

- The PDFCS GPS Synchronization box may be displayed, inhibiting use of the PDFCS keypad. To hide the box and enable the PDFCS keypad, right click on the “GPS” button on the Task Bar with the PDFCS keyboard mouse.
- If all systems are OK, the screen below will not be shown.

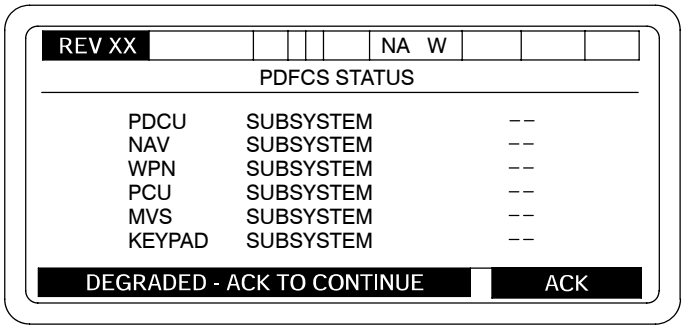


06pc072ma

**NOTE**

If PDU contains an incorrect configuration, the PDFCS will not allow the operator to select normal operations until a correct PDU software configuration is downloaded.

When configuration verification checking indicates that the executed software configuration is not the same as the acquired software configuration, a short error message “INVALID SOFTWARE CONFIGURATION”, “ACK” will appear on the soft key label line of the PDU.

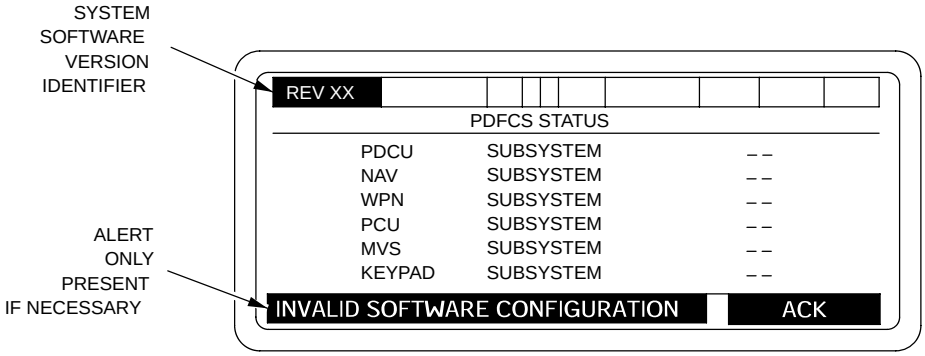


06pc073mb

## 2-15B PDFCS INITIALIZATION - CONTINUED

### 2-15B.2 Initializing.

When a Fire Control Alignment is required by the PDFCS, the alert “FIRE CONTROL ALIGN” “REQ”, “ACK” will appear on the soft key label line of the PDU. This alignment must be accomplished before INITIALIZATION of the PDFCS can be completed. If a full Fire Control Alignment including SYSTEM RESTART or Power Cycle is not completed when it is requested, the PDU FAULT lamps and ACU BIT lamp will illuminate and remain lit.

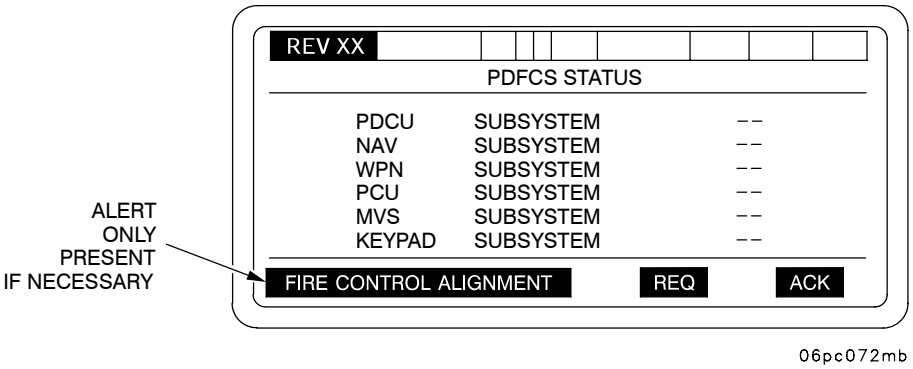


When the message is acknowledged, the PDFCS will proceed to the “SELECT OPERATIONAL MODE” menu. To view detailed software configuration information for each LRU, MAINTENANCE should be selected, IAW procedure in para 3-5.1.

**NOTE**

After an orderly shutdown, go to para 2-12.1.3. However, if a catastrophic failure happens within the system, follow the procedures below.

When initializing the PDFCS, communications parameters (NET ACCESS and NET ADDRESS) are entered to establish digital communications. Data to align the navigation system to a known location must also be entered at initialization. Other data to establish date/time, ammunition supply and propellant temperature, TOT response time, load elevation, and sector of fire must be entered before the initialization process is complete. All this data is input during NORMAL OPERATIONS Mode which is selected from the SELECT OPERATIONAL MODE menu.

**NOTE**

It is possible that an ALERT(S) may appear on the bottom line of the SELECT OPERATIONAL MODE screen. To continue, press the “ACK” soft key.

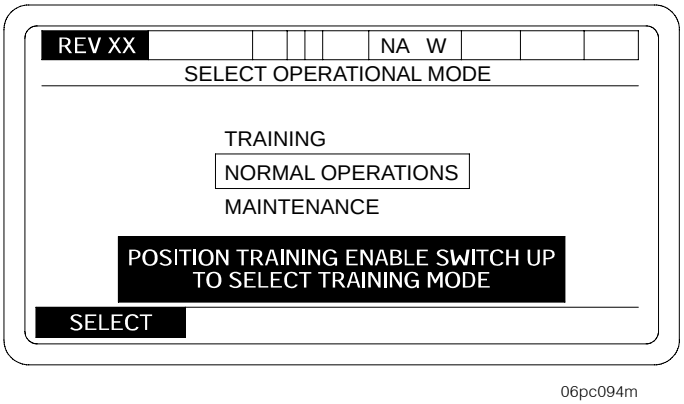

# 2-15B PDFCS INITIALIZATION - CONTINUED

## 2-15B.2 Initializing - Continued

a. Mode Selection. Set TRAINING ON/OFF switch to OFF when selection other than TRAINING is required. Box in NORMAL OPERATIONS mode. Press SELECT key. NET ACCESS menu will be displayed.

**NET ACCESS menu can also be entered from the SETUP AND INFORMATION menu.**

b. Net Access. Using the NET ACCESS menu, check that data in the displayed menu shows same data that the unit SOP specifies.

**NOTE**

To ensure efficient set up of the digital net, it is very important that NET ACCESS and NET ADDRESS data be assigned and controlled by POC/BCS. Verify data per local SOP.

When NETWORK PROTOCOL is PDFCS the menu below will be displayed.

(1) NET TYPE - To select the correct NET TYPE for NETWORK PROTOCOL see Table 2-2 for PDFCS NETWORK PROTOCOL entries 1 to 21, and Table 2-3 for 188-220A PROTOCOL entries 22 to 52.

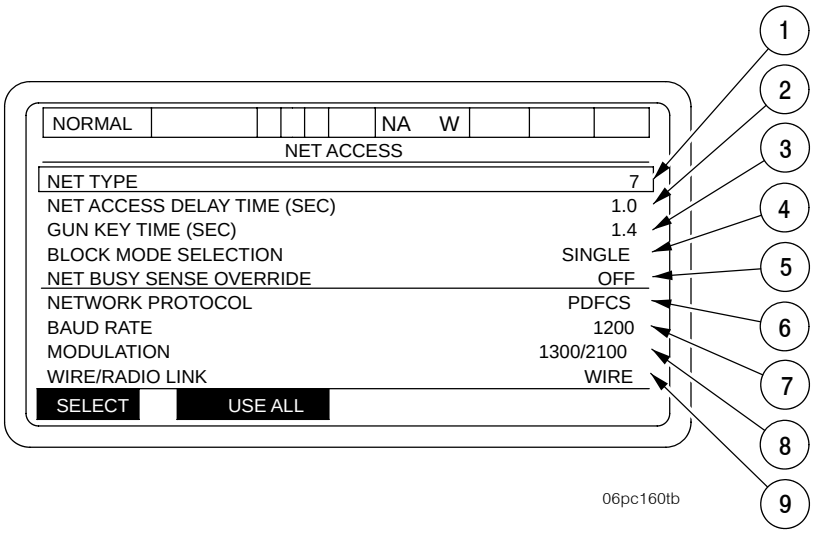


When NETWORK PROTOCOL is 188-220A NET ADDRESS menu below will be displayed.

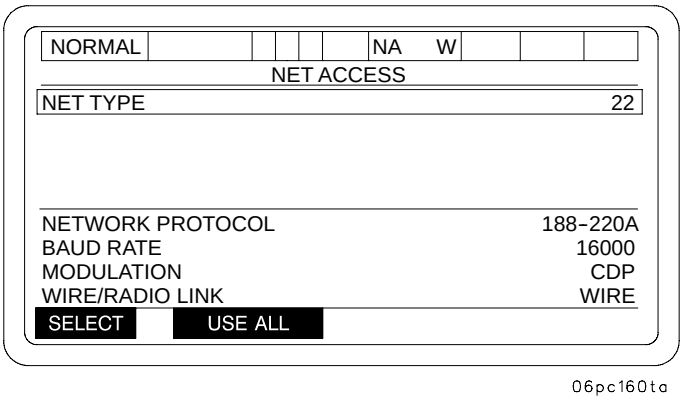

## 2-15B PDFCS INITIALIZATION - CONTINUED

### 2-15B.2 Initializing - Continued

Entries for the NET ACCESS menu are listed below.

1. ENTER NET TYPE. NUMERIC FIELD, RANGE 1. . 52 (Defined in 2-15B.2(b)).
2. NUMERIC FIELD, RANGE .5 TO 49.5 SECONDS (See 2-15B.2 (a)).
3. WHEN SELECTED GUN KEY TIME MENU WILL BE DISPLAYED
4. (SINGLE, DOUBLE) ENTRY
5. (OFF, ON) ENTRY
6. PDFCS OR 188-220A BASED ON NET TYPE. NOT SELECTABLE
7. (300, 600, 1200, 2400, 4800, 8000, 16000, 32000) BASED ON NET TYPE. NOT SELECTABLE
8. (NRZ, CDP, 1200/2400, 1300/2100, 1575/2425) BASED ON NET TYPE. NOT SELECTABLE
9. (WIRE RADIO, RADIO/KY-57) BASED ON NET TYPE. NOT SELECTABLE
   WHEN NET TYPE OR NET ACCESS DELAY TIME IS SELECTED (See 2-15B.2 (a) and (b)).

USE ALL

- The NET ADDRESS (PDFCS) menu will be displayed if NETWORK PROTOCOL is PDFCS
- The NET ADDRESS (188.220A) menu will be displayed if NETWORK PROTOCOL is 188-220A

(a) When NET ACCESS DELAY TIME (SEC) SELECTED WIRE RADIO LINK LINE, line is overwritten with, “TYPE TIME: .5 TO 49.5 SEC” - PRESS ENT -

(b) When NET TYPE SELECTED WIRE RADIO LINK LINE is overwritten with, “TYPE NET TYPE: Entries from Tables 2-2 and 2-3” - PRESS ENT -

## 2-15B PDFCS INITIALIZATION - CONTINUED

### 2-15B.2 Initializing - Continued

### TABLE 2-2 NET TYPE Table (PDFCS PROTOCOL)

| | PROTOCOL | Device | Modulation | Baud Rate |
|---|---|---|---|---|
| 1 | PDFCS | Wire | CDP | 8,000 |
| 2 | PDFCS | Wire | CDP | 16,000 |
| 3 | PDFCS | Wire | CDP | 32,000 |
| 4 | PDFCS | Wire | 1200/2400 | 600 |
| 5 | PDFCS | Wire | 1200/2400 | 1,200 |
| 6 | PDFCS | Wire | 1300/2100 | 600 |
| 7 | PDFCS | Wire | 1300/2100 | 1,200 |
| 8 | PDFCS | Radio | NRZ | 600 |
| 9 | PDFCS | Radio | NRZ | 1,200 |
| 10 | PDFCS | Radio | NRZ | 2,400 |
| 11 | PDFCS | Radio | NRZ | 4,800 |
| 12 | PDFCS | Radio | NRZ | 16,000 |
| 13 | PDFCS | Radio | 1200/2400 | 600 |
| 14 | PDFCS | Radio | 1200/2400 | 1,200 |
| 15 | PDFCS | Radio | 1300/2100 | 600 |
| 16 | PDFCS | Radio | 1300/2100 | 1,200 |
| 17 | PDFCS | Radio/KY-57 | NRZ | 16,000 |
| 18 | PDFCS | Radio/KY-57 | 1200/2400 | 600 |
| 19 | PDFCS | Radio/KY-57 | 1200/2400 | 1,200 |
| 20 | PDFCS | Radio/KY-57 | 1300/2100 | 600 |
| 21 | PDFCS | Radio/KY-57 | 1300/2100 | 1,200 |

## PDFCS INITIALIZATION - CONTINUED

### 2-15B.2 Initializing - Continued

### TABLE 2-3 NET TYPE Table (188-220A)

| | PROTOCOL | Device | Modulation | Baud Rate |
|---|---|---|---|---|
| 22 | 188-220A | Wire | CDP | 16,000 |
| 23 | 188-220A | Wire | CDP | 32,000 |
| 24 | 188-220A | Wire | 1300/2100 | 300 |
| 25 | 188-220A | Wire | 1300/2100 | 600 |
| 26 | 188-220A | Wire | 1300/2100 | 1,200 |
| 27 | 188-220A | Wire | 1575/2425 | 300 |
| 28 | 188-220A | Wire | 1575/2425 | 600 |
| 29 | 188-220A | Wire | 1575/2425 | 1,200 |
| 30 | 188-220A | Radio | NRZ | 600 |
| 31 | 188-220A | Radio | NRZ | 1,200 |
| 32 | 188-220A | Radio | NRZ | 2,400 |
| 33 | 188-220A | Radio | NRZ | 4,800 |
| 34 | 188-220A | Radio | NRZ | 16,000 |
| 35 | 188-220A | Radio | 1300/2100 | 300 |
| 36 | 188-220A | Radio | 1300/2100 | 600 |
| 37 | 188-220A | Radio | 1300/2100 | 1,200 |
| 38 | 188-220A | Radio | 1575/2425 | 300 |
| 39 | 188-220A | Radio | 1575/2425 | 600 |
| 40 | 188-220A | Radio | 1575/2425 | 1,200 |
| 41 | 188-220A | Radio/KY-57 | NRZ | 300 |
| 42 | 188-220A | Radio/KY-57 | NRZ | 600 |
| 43 | 188-220A | Radio/KY-57 | NRZ | 1,200 |
| 44 | 188-220A | Radio/KY-57 | NRZ | 2,400 |
| 45 | 188-220A | Radio/KY-57 | NRZ | 4,800 |
| 46 | 188-220A | Radio/KY-57 | NRZ | 16,000 |
| 47 | 188-220A | Radio/KY-57 | 1300/2100 | 300 |
| 48 | 188-220A | Radio/KY-57 | 1300/2100 | 600 |
| 49 | 188-220A | Radio/KY-57 | 1300/2100 | 1,200 |
| 50 | 188-220A | Radio/KY-57 | 1575/2425 | 300 |
| 51 | 188-220A | Radio/KY-57 | 1575/2425 | 600 |
| 52 | 188-220A | Radio/KY-57 | 1575/2425 | 1,200 |

# 2-15B PDFCS INITIALIZATION - CONTINUED

## 2-15B.2 Initializing - Continued

(2) NET ACCESS DELAY TIME - Used to select proper transmission delay time to maintain network access precedence order assigned to various subscribers. To enter a new NET ACCESS DELAY TIME, box in new time. Press SELECT key. Menu will request time entry. Enter new time per SOP. Allowable entries are 0.5 to 49.5 seconds in 0.5 second intervals.

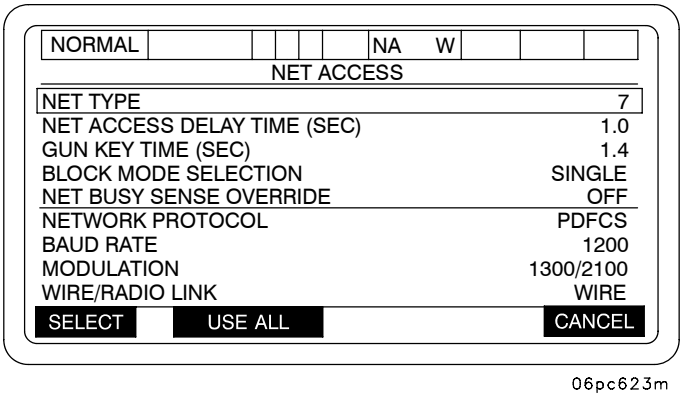


06pc623m

USE ALL = Will display TACFIRE/FSK menu

CANCEL = Return to SETUP AND INFORMATION menu

(3) GUN KEY TIME - Used for selecting assigned transmit delay time. This stabilizes the communications link and allows the radio to reach full transmit power before the digital data message is sent. When GUN KEY TIME is selected from the NET ACCESS menu, a NET ACCESS-GUN KEY TIME menu will be displayed. Box in proper time. Press SELECT key. This will enter data into PDFCS and return to NET ACCESS menu (new GUN KEY TIME will be shown).

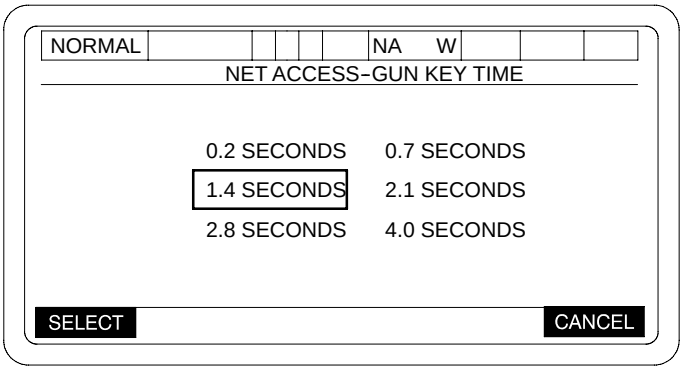


06pc096m

# 2-15B PDFCS INITIALIZATION - CONTINUED

## 2-15B.2 Initializing - Continued

(4) BLOCK MODE SELECTION - Used for selection of single-block or double-block mode transmission of each data block. The double-block transmission provides for each data block to be transmitted twice. When BLOCK MODE SELECTION is selected, the NET ACCESS menu will appear with present block mode boxed in. After proper selection is made, the entire NET ACCESS display will be shown. New data will be shown in proper field. (Other data will remain unchanged.) Double-block mode will be used when requested by Platoon Operations Center (POC).

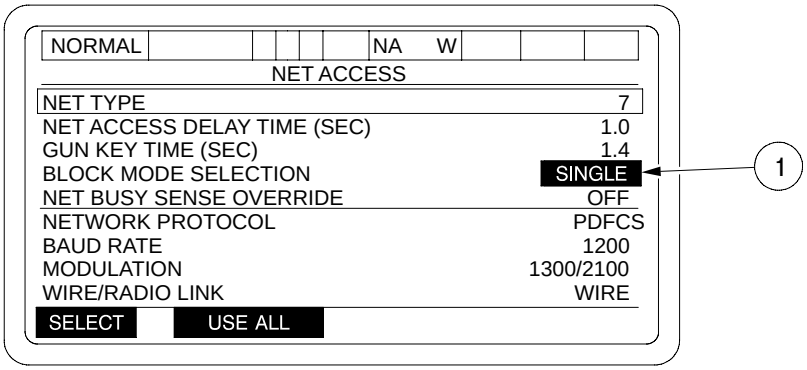


1 Enter (SINGLE, DOUBLE)

06pc624m

(5) NET BUSY SENSE OVERRIDE - Meant to be used to force a message through when communication net is degraded or jammed (message traffic or noise is sensed by communications processor). Selecting Net Busy Sense Override (ON) when other subscribers are transmitting can cause message errors in radio traffic, and denies other subscribers net access. Consult unit SOP for proper use of NET BUSY SENSE OVERRIDE. Box in NET BUSY SENSE OVERRIDE and press SELECT key. A NET ACCESS menu will be displayed showing present status boxed in. After proper selection, YES or NO, is made, new data will be in proper field on EL Panel. (Other data will remain unchanged.)

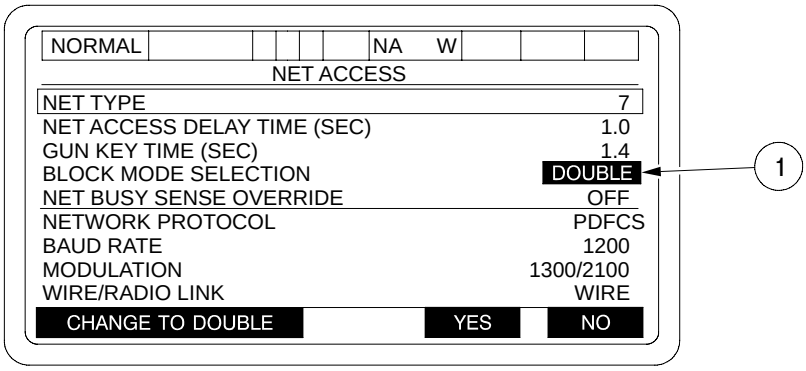


1 Enter (SINGLE, DOUBLE)

06PC625m

**NOTE**

ENTERING NET ACCESS TO SYSTEM - To enter this data in the PDFCS, check that all data has been corrected or changed as required per local SOP. Press USE ALL key. Data is now in PDFCS system and NET ACCESS has been initialized. NET ADDRESS menu will be displayed.

# 2-15B PDFCS INITIALIZATION - CONTINUED

## 2-15B.2 Initializing - Continued

c. Net Address. NET ADDRESS is used to name radio subscribers and must be initialized. The NET ADDRESS menu will appear on the PDU after data for NET ACCESS is stored. If all data displayed is correct according to the unit SOP, press USE ALL key to initialize the NET ADDRESS. If data must be updated or changed, proceed as follows.

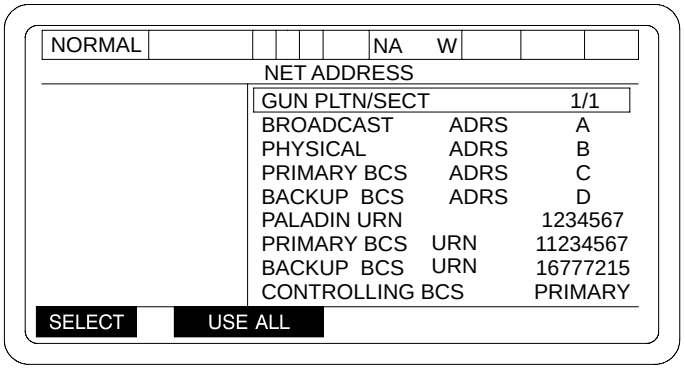


06pc626m

(1) GUN PLTN/SECT - Selection of GUN PLTN/SECT from the NET ADDRESS menu will bring up a NET ADDRESS menu with Gun Platoon/Section choices displayed. Present GUN PLTN/SECT will be highlighted. Change selection by boxing in individual GUN PLTN/SECT. Press SELECT key to enter new GUN PLTN/SECT into the PDFCS.

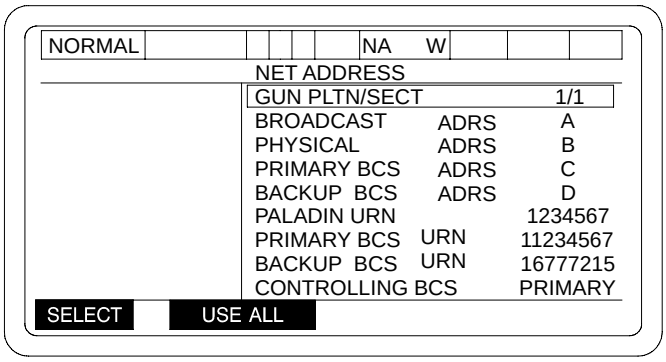


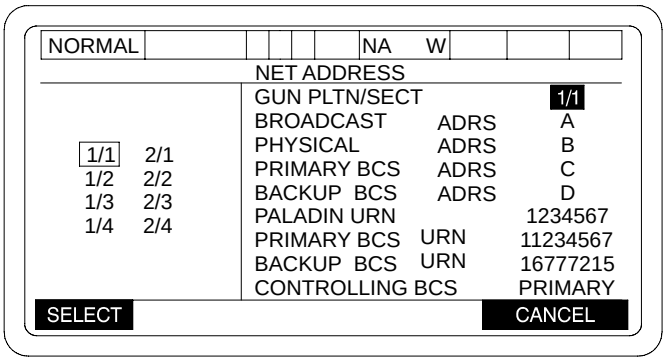


06pc627m

# 2-15B PDFCS INITIALIZATION - CONTINUED

## 2-15B.2 Initializing - Continued

(2) BROADCAST ADDRESS - Selecting BROADCAST ADRS on NET ADDRESS menu will display the NET ADDRESS menu. The present status of the Broadcast Address will be highlighted and a table of addresses will appear on the left side of menu. Selecting letters from table on left side of display will delete them. Selected letters will now appear on right side of display. This will prevent selecting the same letter twice, which would cause communication errors. A letter is selected by boxing in selection and pressing SELECT key.

(3) PHYSICAL ADRS- Address used for Special Missions i.e. (Sensor to Shooter) - These fields are initialized in the same manner as the BROADCAST ADRS.

(4) PRIMARY BCS ADRS, and BACKUP BCS ADRS - These fields are initialized in the same manner as the BROADCAST ADRS.

**NOTE**

The backup BCS Address will only be displayed if the primary BCS provided an address in the subscriber file message.

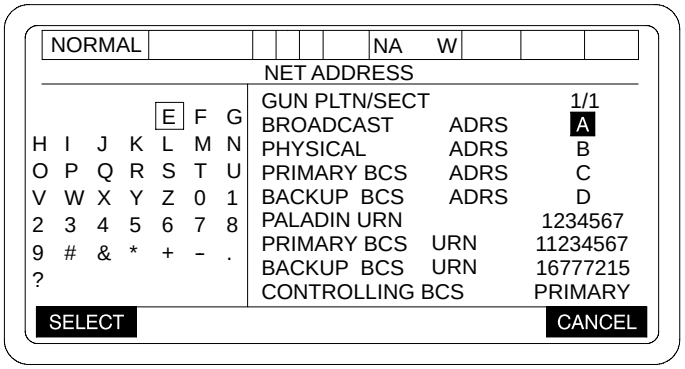


06pc628m

# 2-15B PDFCS INITIALIZATION - CONTINUED

## 2-15B.2 Initializing - Continued

(5) PALADIN URN, PRIMARY BCS URN and BACKUP BCS URN - These fields are initialized by entering the same data from the communication parameter card. If any URN value is duplicated a "WARNING" will be displayed.

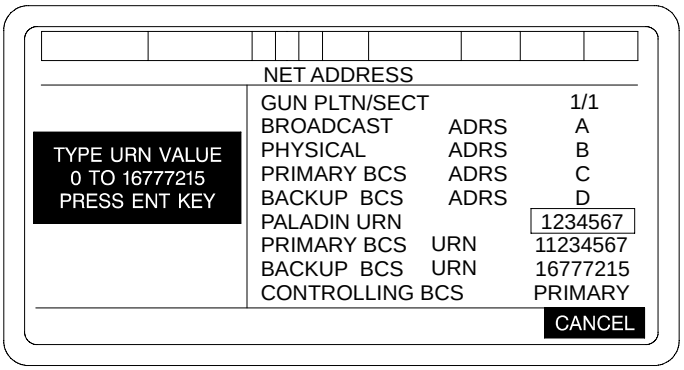


06pc629m

(6) CONTROLLING BCS - When this is boxed in and the SELECT key is pressed, the menu will ask if the controlling BCS is to be either backup or primary. By pressing the YES key, the controlling BCS will be assigned the opposite of shown state.

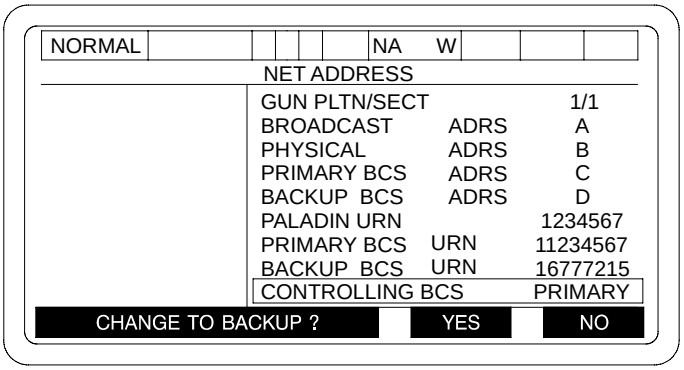


06pc630m

**NOTE**

Controlling BCS will not be selectable if no backup BCS address is sent by the POC.

# 2-15B PDFCS INITIALIZATION - CONTINUED

## 2-15B.2 Initializing - Continued

(7) Net Address. NET ADDRESS for 188-220A NETWORK PROTOCOL is used to name subscribers. The NET ADDRESS menu will appear on the PDU after data for NET ACCESS is stored. If all data displayed is correct according to the unit SOP, press USE ALL key to initialize the NET ADDRESS. If data must be updated or changed, proceed as follows:

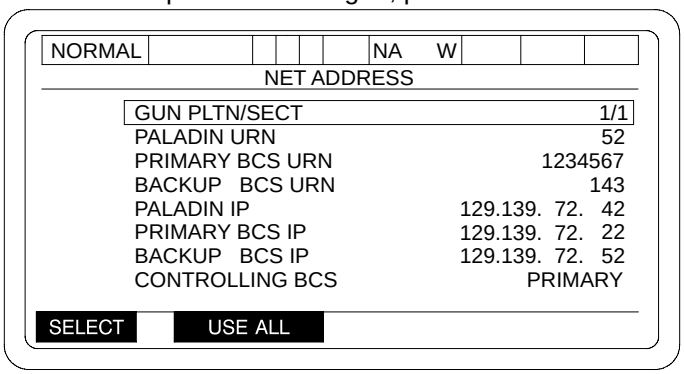


06pc631m

(8) GUN PLTN/SECT - Selection of GUN PLTN/SEC from the NET ADDRESS menu will bring up a NET ADDRESS menu with Gun Platoon/Section choices displayed. Change selection by boxing in individual GUN PLTN/SECT. Press SELECT key to enter new GUN PLTN/SECT into the PDFCS.

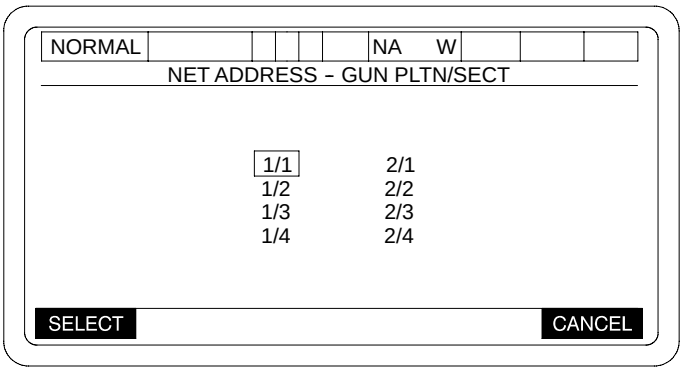


06pc171t

# 2-15B PDFCS INITIALIZATION - CONTINUED

## 2-15B.2 Initializing - Continued

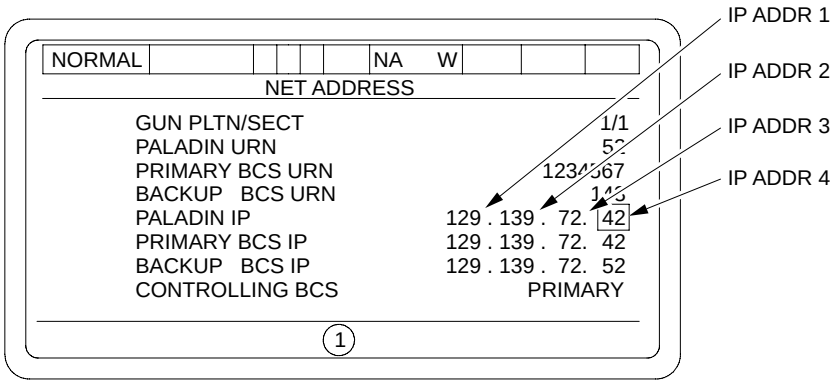


1 DUPLICATE IP ADDRESS ACK

Appears if any IP address is duplicated.

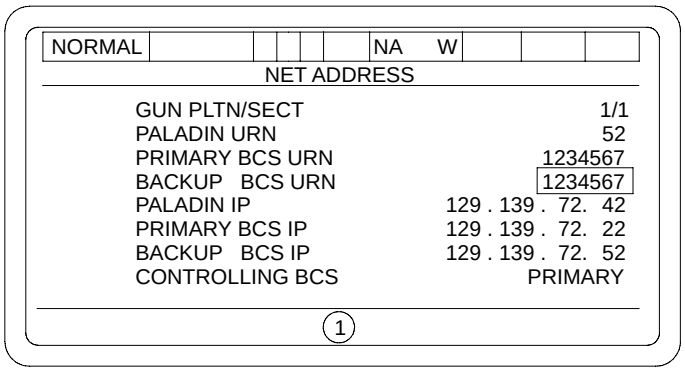


1 DUPLICATE URN ACK

Appears if any URN address is duplicated.

06pc632M

PALADIN URN, PRIMARY BCS URN and BACKUP BCS URN - These fields are initialized in the same manner. If any URN value is duplicated a “WARNING” will be displayed.

(1) PALADIN IP ADDRESS - Can be up to 11 digits in four Groups. Once all data has been entered press the FINISHED key.

(2) PRIMARY BCS IP and BACKUP BCS IP ADDRESS will be changed to match the first and second Group entered in the PALADIN IP ADDRESS.

(3) Third and fourth digits can be entered in the same manner as entered in the PALADIN IP ADDRESS.

# 2-15B PDFCS INITIALIZATION - CONTINUED

## 2-15B.2 Initializing - Continued

(9) CONTROLLING BCS - When this is boxed in and the SELECT key is pressed, the menu will ask if the controlling BCS is to be either backup or primary. By pressing the YES key, the controlling BCS will be assigned the opposite of shown state.

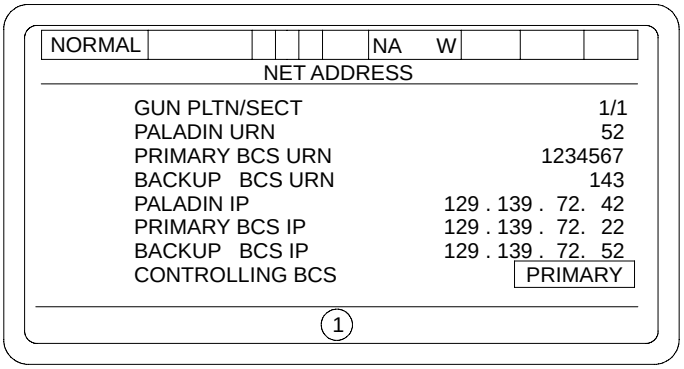


06pc633m

(1) Appears if PALADIN IP Address has been changed 27 times WITHOUT REBOOTING.

Commo will FAIL and raise the following TWO alerts.

06pc175t

Each alert must be acknowledged.

To RE-ENABLE COMMO, PDFCS PDCU must be POWERED DOWN and then POWERED UP.

**NOTE**

ENTERING NET ADDRESS TO SYSTEM - To enter this data in the PDFCS, check that all data has been corrected or changed as required per local SOP. Press USE ALL key. Data is now in PDFCS system and NET ADDRESS has been initialized. The SETUP AND INFORMATION menu will be displayed.

# 2-15B PDFCS INITIALIZATION - CONTINUED

## 2-15B.2 Initializing - Continued

d. Other Initialization Steps. When NET ACCESS and NET ADDRESS have both been initialized, a SETUP AND INFORMATION menu will be displayed. There are two pages to this menu. By pressing NEXT PAGE key, second page will be displayed.

### NOTE

- Items marked with an * must be entered to complete initialization process. Without these data entries, the system will not be completely initialized and the PDFCS will not be able to receive a mission.
- The NAV UPDATE selection will be blank when a command has been sent to the navigation subsystem and has not yet been completed.
- When in a degraded mode, some items may not appear.

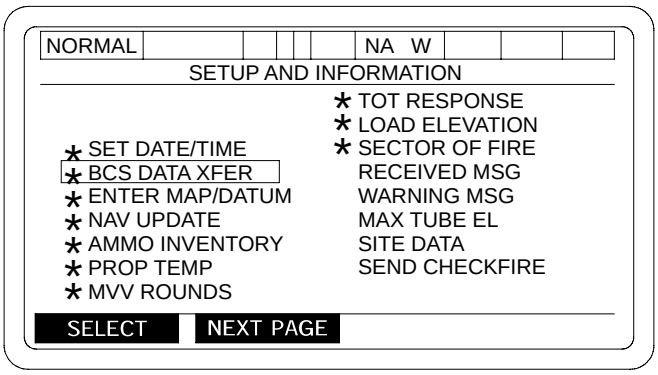


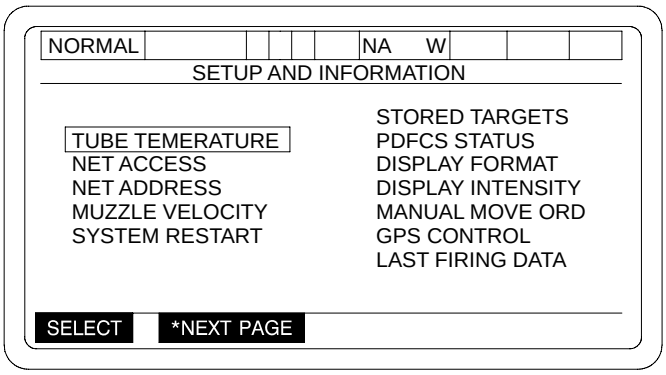


06pc634m

# 2-15B PDFCS INITIALIZATION - CONTINUED

## 2-15B.2 Initializing - Continued

Steps of other initialization data entry are done as follows:

(1) SET DATE/TIME Group - This data is required for proper communications and is used for TOT data and other time related tasks and missions. From SETUP AND INFORMATION menu, box in SET DATE/TIME. Press SELECT key. This will cause a SET DATE/TIME Group menu to be displayed. If GPS data is available select “USE GPS”. Note, GPS Time is ZULU (Greenwich Mean Time) when “USE GPS” selected, all times will be aligned to ZULU (Local ZULU and GPS). If GPS data is not available or if POC has instructed you not to use GPS proceed as follows:

(a) Enter two digits each for Year, Month, Date, Hour and Minute into boxed-in area.

(b) If a mistake is made prior to typing in all 10 digits, press CLR key and try again. If all 10 digits have been typed in, then menu will automatically show a SET DATE/TIME GROUP display with prompt.

(c) If incorrect data has been typed in after all 10 digits have been entered, press CANCEL key. This will return display to SET DATE/TIME menu. Then proceed with reentering correct data for Date/Time Group.

(d) To ensure proper time synchronization between the PDFCS and POC/BCS, a countdown to MARK should be controlled by the POC. If data is correct when MARK is announced by POC, press MARK key to start the clock. This will return the display to the SETUP AND INFORMATION menu.

(e) Date/Time setting on system - Defaults to system clock if no other input is entered in. BCS and the PDFCS messages will be rejected if more than 60 minutes difference between BCS time and PDFCS time has elapsed. Unit SOP needs to be in real Date/Time.

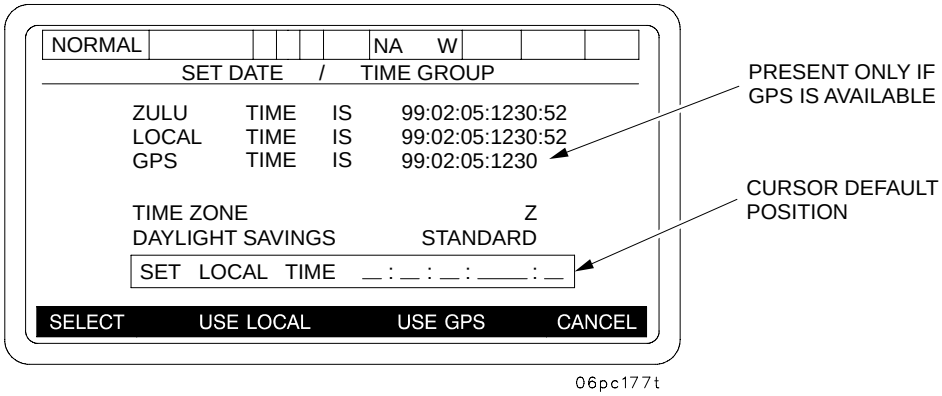


**NOTE**

Upon entering the Current DTG, Current Zulu, and Current GPS time, if available, shall be displayed to the operator. Operator must enter Time Zone, Daylight Savings and NEW DTG. The first time the PDFCS-XXI program is executed the Zulu and Local time will be calculated from the hardware clock.

# 2-15B PDFCS INITIALIZATION - CONTINUED

## 2-15B.2 Initializing - Continued

SELECT TIME ZONE - ENTER SELECT TIME ZONE IN ACCORDANCE WITH UNIT SOP.

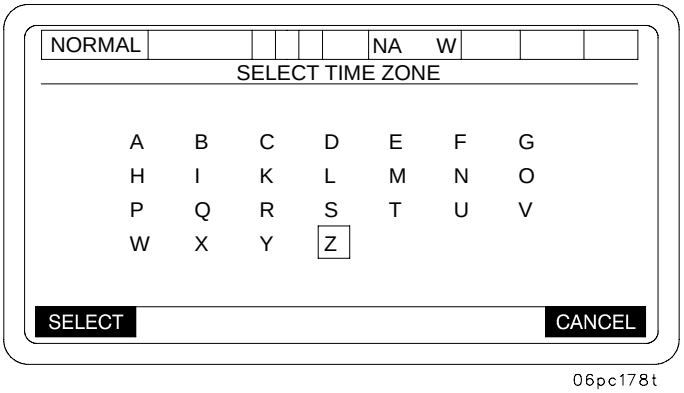


SELECT DAYLIGHT SAVINGS - ENTER SELECT DAYLIGHT SAVINGS TIME IN ACCORDANCE WITH UNIT SOP.

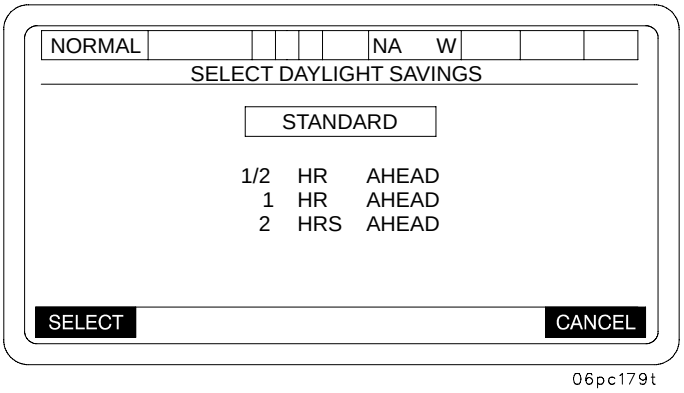

# 2-15B PDFCS INITIALIZATION - CONTINUED

## 2-15B.2 Initializing - Continued

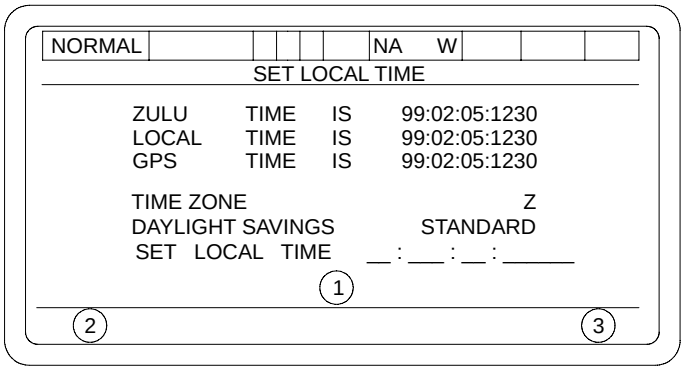


06pc180t

Notes:

1

TYPE IN NEW DTG - YY:MM:HHMM = Shall appear below the SET LOCAL TIME row upon entry to display above menu. Operator must enter date in format displayed (YY:MM:DD:HHMM). Operator may press CLEAR any time to reset entry.

PRESS MARK TO SET LOCAL TIME = Shall appear below the SET LOCAL TIME row upon entry of the last digit of the minute.

2

MARK = The MARK key shall be displayed upon entry of the last digit of the minute. When the MARK key is pressed the Local Time shall be processed and returned to the SETUP AND INFORMATION menu.

INVALID DTG VALUE ACK = If an invalid DGT is entered, this error shall be displayed to the operator. Press “ACK” and re-enter the date and time.

3

CANCEL = When PRESS MARK TO SET LOCAL TIME is displayed and the CANCEL key is pressed the SET LOCAL TIME entries shall be cleared and the operator shall be able to enter a new LOCAL TIME.

= When the CANCEL key is pressed under all other conditions to display the SETUP AND INFORMATION menu will be displayed.

Date/Time setting on System - Defaults to system clock if no other Input is recorded in BCS and PDFCS. Messages will reject if more than 60 minutes has elapsed. Unit SOP needs to be in real Date/Time.

# 2-15B PDFCS INITIALIZATION - CONTINUED

## 2-15B.2 Initializing - Continued

**NOTE**

The BCS data transfer must be done each time you initialize the PDFCS, if the FDC/BCS is operational.

(2) BCS DATA XFER - To get initialization data from the POC/BCS, box in BCS DATA XFER and then press SELECT key. This will cause a BCS DATA XFER menu to be displayed with INITIALIZATION already boxed and Operator Alert. Pressing YES key will send a request to POC/BCS for needed data. Data includes: Subscriber File Message, Map Modification Input Message, Computer Meteorological Message, and Registration Data Input Message. This ensures that operator can properly communicate with other subscribers and can compute fire mission accurately. If NO ACK REQ INIT is displayed, contact POC to ensure that proper initialization has taken place. Repeat procedure if required. When initialization is complete, press CANCEL key.

If BCS DATA XFER does not have an *, then pressing the SELECT key will cause a BCS DATA XFER menu to be displayed without INITIALIZATION boxed. Box in INITIALIZATION and press SELECT key to provide the Operator Alert. Pressing YES sends the request to POC/BCS as described above.

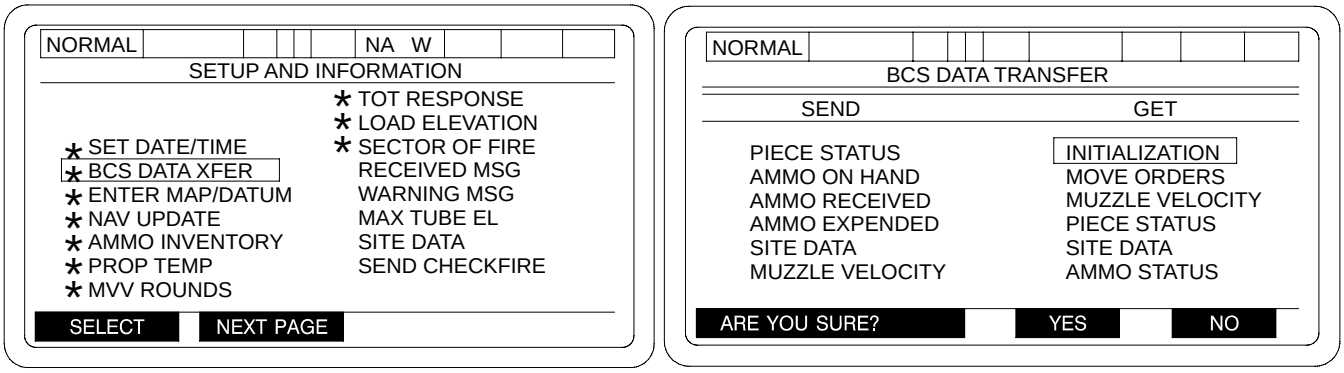


06pc415ma

# 2-15B PDFCS INITIALIZATION - CONTINUED

## 2-15B.2 Initializing - Continued

(3) ENTER MAP and DATUM -The BCS DATA XFER, INITIALIZATION data includes a MAP MOD and SPHEROID,and map DATUM.

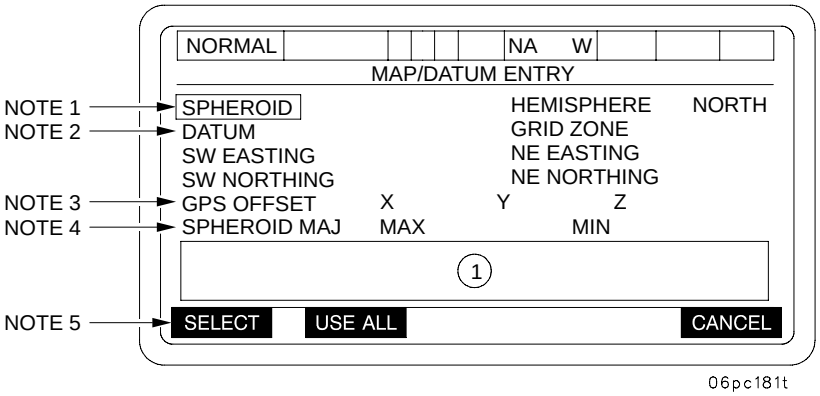


Check to see if all the data is correct. If it is correct, press the USE ALL key, and proceed with the initialization. If an entry is not correct, select that field and make corrections.

NOTE 1 SELECTION OF THIS FIELD WILL DISPLAY SELECT SPHEROID MENU.

NOTE 2 SELECTION OF THIS FIELD WILL DISPLAY SELECT DATUM MENU.

NOTE 3 FIELD IS ONLY PRESENT IF USER DEFINED (USRDEF) DATUM IS USED. NOT MODIFIABLE.

NOTE 4 FIELD IS ONLY PRESENT IF USER DEFINED (USRDEF) SPHEROID IS USED. NOT MODIFIABLE.

NOTE 5 HEMISPHERE FIELD SELECTED THE FOLLOWING WILL BE DISPLAYED.

CHANGE HEMISPHERE? YES NO

WHEN ANY OTHER FIELD IS SELECTED THE FOLLOWING WILL BE DISPLAYED.

CANCEL

(1) OPERATOR PROMPT AREA FOR LEGAL VALUES

## 2-15B PDFCS INITIALIZATION - CONTINUED

### 2-15B.2 Initializing - Continued

Listed below are the legal values for each field of the MAP/DATUM entry Display:

When SPHEROID is selected:

SPHEROID selected will define DATUMs available.
Type 1 . . 9 or A . . I and USRDEF
Press ENT key

When SW EASTING is selected:

EASTING value of SW Corner Of Howitzer Operational Area.
Type 0 to 999999:
Press ENT key.

When SW NORTHING is selected:

NORTHING value of SW Corner of Howitzer Operational Area.
Type 0 to 11000000:
Press ENT key.

When HEMISPHERE is selected:

Select NORTH for above the Equator, SOUTH for below.
CHANGE HEMISPHERE YES NO
Press YES or NO key.

When GRD ZONE is selected:

UTM GRID ZONE of Howitzer Operational Area.
Type 0 to 60:
Press ENT key.

When NE EASTING is selected:

EASTING value of NE Corner Of Howitzer Operational Area.
Type 1 to 999999:
Press ENT key.

When NE NORTHING is selected:

NORTHING value of NE Corner Of Howitzer Operational Area.
Type 0 to 11000000:
Press ENT key.

When GPS OFFSET is selected:

Type -2000.0 to + 2000.0:
Press ENT key.

# 2-15B PDFCS INITIALIZATION - CONTINUED

## 2-15B.2 Initializing - Continued

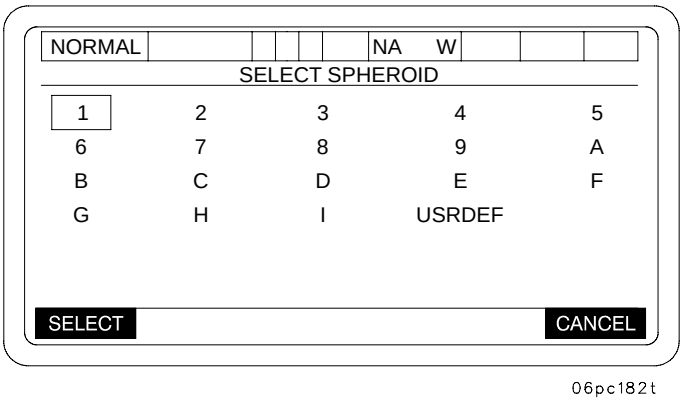


Enter the defined SPHEROID, PRESS the SELECT SOFT KEY and the SELECT DATUM menu will be displayed. Refer to Tables in Appendix J for SPHEROID listings.

SOFT KEY SEQUENCING SHALL BE AS FOLLOWS:

1. If USRDEF is boxed in and SELECTED then the ENTER USER DEFINED SPHEROID MAJOR AXIS menu will be displayed.
2. If any other SPHEROID is SELECTED then the SELECT DATUM menu will be displayed to force SELECTION of the DATUM.
3. If CANCEL, then the MAP DATUM ENTRY menu will be displayed.

Maps are based upon a “reference datum.” This is really the model of the Earth that the cartographer uses when making a map. The reference datum consists of two parts, the spheroids and the datum offsets.

The Earth is really not a perfectly round globe but is a little “fatter” at the equator. Therefore, the mapmaker uses a spheroid rather than a globe to describe the Earth’s shape. Instead of just using one radius as one would do to describe a globe, two values are used. The first is the semi-major axis. It is the radius of the Earth at the equator. The second number is the semi-minor axis. It is the distance from the center of the Earth to the poles. It is slightly smaller than the semi-major axis. (The WGS 84 model of the Earth uses a semi-major axis of 6,378,137 meters and 6,356,752 meters for the semi-minor axis).

The cartographer may choose to base his model of the Earth’s surface using a center point that is different from the true center of the Earth. This offset of the center point is described by three “datum offset” values: delta X, delta Y and delta Z. These values are typically a few hundred meters.

There are many standard spheroid and datums commonly used for maps. If the mapmod is not supplied by a message from BCS, the PDFCS operator will be told to select a certain spheroid and datum at the display unit. The starting point for entering this data is the MAP/DATUM ENTRY display.

The spheroid is selected using the SELECT SPHEROID sub-display. This display lists choices 1 to 9 and A to I. It is possible to use spheroid values different from the ones in the display lists. The different values are entered as “user defined.” This is selected by the USRDEF option listed as a choice for a spheroid. If the operator selects USRDEF, other sub-displays prompt him to enter the semi-major and semi-minor axes. These values must be obtained from the POC and should only be used with guidance from Battery Commander.

The datum offset is selected using the SELECT DATUM sub-display. This display lists valid choices listed by an alphabetical code. It is possible to use datum offset values different from the ones in the display lists. The different values are entered as “user defined.” This is selected by the USRDEF option listed as a choice for datum offset. The datum offset values are entered using the ENTER USER DATUM PARAMETERS sub-display. (For historical reasons, the offset values are listed as GPS OFFSET X, Y and Z.)

# 2-15B PDFCS INITIALIZATION - CONTINUED

## 2-15B.2 Initializing - Continued

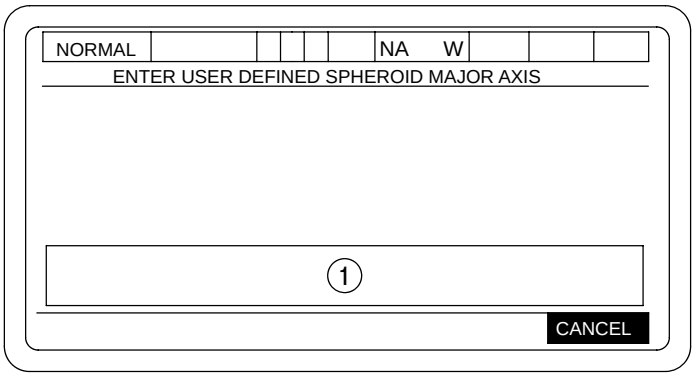


06pc239t

1 TYPE VALUE
BETWEEN 6376137.00 AND 6380137.00
-PRESS ENT KEY-

1 Any un-edited DATA fields remain at their current values when ENT KEY is pressed.

2 SOFT KEY sequencing shall be as follows:

If **CANCEL**, then the SELECT SPHEROID menu will be displayed.

If **ENTER**, then the ENTER USER DEFINED SPHEROID MAJOR AXIS menu will be displayed.

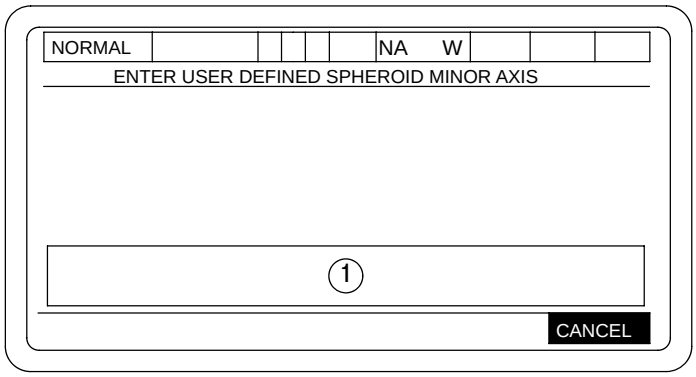


06pc240t

1 TYPE VALUE
BETWEEN 6355477.00 AND 6358028.00
-PRESS ENT KEY-

1 Any un-edited DATA fields remain at their current values when ENT KEY is pressed.

2 SOFT KEY sequencing shall be as follows:

# 2-15B PDFCS INITIALIZATION - CONTINUED

## 2-15B.2 Initializing - Continued

If **CANCEL**, the ENTER USER DEFINED SPHERIOD MAJOR AXIS menu will be displayed.

If **ENTER**, then the CONFIRM USER DEFINED SPHERIOD AXES menu will be displayed.

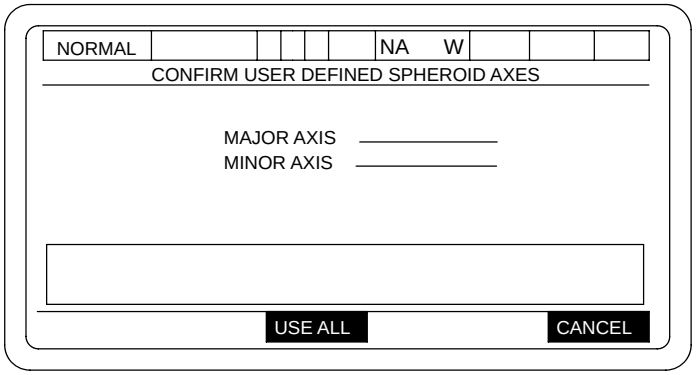


06pc187ta

SOFT KEY sequencing shall be as follows:

If **CANCEL**, then ENTER USER DEFINED SPHERIOD MINOR AXIS menu will be displayed.

If **USE ALL**, then the SELECT DATUM menu will be displayed.

After all the correct data has been entered, press the USE ALL key to clear * and return to the main menu.

The datum offset is selected using the SELECT DATUM sub-display. This display lists valid choices listed by an alphabetical code. It is possible to use datum offset values different from the ones in the display lists. The different values are entered as “user defined.” This is selected by the USRDEF option listed as a choice for datum offset. The datum offset values are entered using the ENTER USER DATUM PARAMETERS sub-display. (For historical reasons, the offset values are listed as GPS OFFSET X, Y and Z.)

# 2-15B PDFCS INITIALIZATION - CONTINUED

## 2-15B.2 Initializing - Continued

There is a restriction on the use of user defined spheroid and datum. The operator cannot use a new user defined spheroid if current spheroid selection is user defined. Likewise, the operator cannot select a new user defined datum selection if the current datum selection is user defined. If the operator wants to go from a user defined datum to a new user defined datum, the operator should simply select any standard datum and then enter the new user defined. Likewise, if the operator wants to go from a user defined spheroid to a new user defined spheroid, the operator should simply select any standard spheroid and then enter the new user defined.

When DATUM is selected, SELECT DATUM menu is displayed:

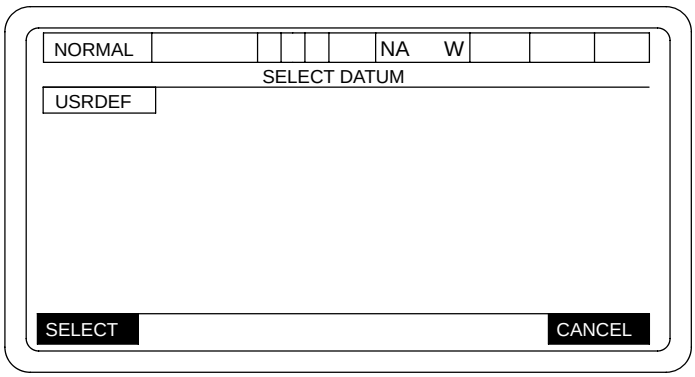


06pc183ta

If CANCEL then the ENTER MAP/DATUM will be displayed.

If SELECT then the ENTER USER DATUM PARAMETERS menu is displayed.

Box in the correct DATUM and press the SELECT key. The DATUMs available are dependent on the SPHEROID selected. See Appendix J.

### NOTE

The reference frame for UTM position coordinates is a DATUM. Typically, a local DATUM is defined by an ellipsoidal Earth model (SPHEROID) and a starting point (origin) for the coordinate system. Coordinates on a map or in a Trig list (SCPs) often are on a Local DATUM. An example of a Local DATUM is the North American 1927 (NAD 27) DATUM used in the United States.

## 2-15B PDFCS INITIALIZATION - CONTINUED

### 2-15B.2 Initializing - Continued

There have been many different Local DATUMs developed. GPS computes position on the World Geodetic System 1984 (WGS 84), a worldwide coordinate system. To use GPS with coordinates on a Local DATUM, the coordinates must be mathematically shifted. The PDFCS (DRUH and PLGR) can automatically perform DATUM shifting, but first the operator must select the Local DATUM to be used, or provide the appropriate shift parameters. For PDFCS operation, Local DATUMs are represented by two sets of parameters: the Local Ellipsoid (SPHEROID) and shift parameters as defined for each Local DATUM (DATUM IDs).

The BCS can provide the SPHEROID via the MAP MOD. The SPHEROID selected will determine which DATUM IDs will be available for selection. The PDFCS/BCS SPHEROID and DATUM TABLE provides the SPHEROID number for the PDFCS and BCS, which DATUM IDs that are available for that SPHEROID number and the normal coverage area. Note that there may be more than one DATUM ID associated with a Local DATUM because the shifts vary by locality. For other DATUMs or areas outside the indicated coverage area, User Defined (USRDEF) Datum shifts may be entered manually. The table is not intended as an absolute. A map sheet will identify the DATUM name, Ellipsoid (SPHEROID) name and the coordinate type, or the map sheet will identify the area. The data from a Trig list should identify the same information. These parameters must be correlated to the DATUM ID. If the applicable DATUM hasn't been programmed in the PDFCS, shift parameters for many other DATUMs and regions have been published in DMA TR 8350.2 and may be entered thru the GPS X, Y and Z OFFSETs. Note that the PDFCS can not accept shift parameters for all DATUMs because its SPHEROID capability is limited to those listed in the PDFCS/BCS Table (Appendix J).

If the DATUM USRDEF is selected, then the GPS X, Y and Z offsets must be entered. These values must be obtained from the POC and should only be used with guidance from Battery Commander.

The ENTER USER DATUM PARAMETERS page should look like:

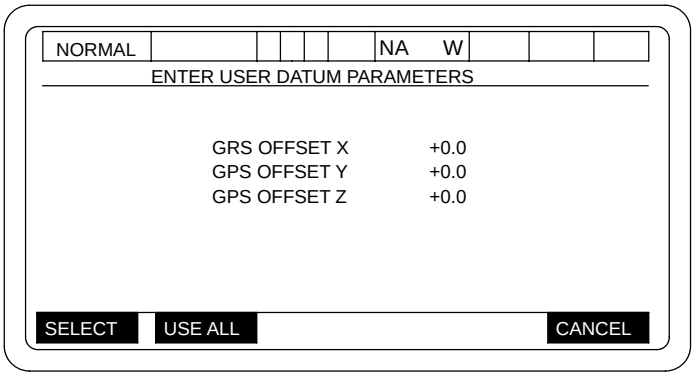


06pc113ma

When GPS OFFSET X is selected:

Type -2000.0 to +2000.0
Press ENT key.

When GPS OFFSET Y is selected:

Type -2000.0 to +2000.0

When GPS OFFSET is selected:

Type -2000.0 to +2000.0

# 2-15B PDFCS INITIALIZATION - CONTINUED

## 2-15B.2 Initializing - Continued

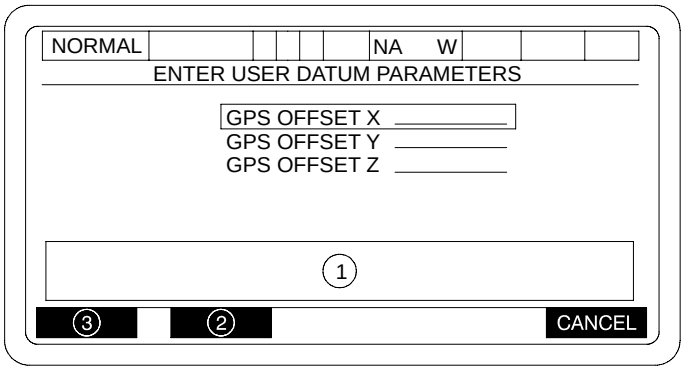


06pc184t

1 When any field selected:

TYPE OFFSET
BETWEEN -2000.0 AND +2000.0
-PRESS ENT KEY-

2 When field selected: + / -

Otherwise: USE ALL

3 When no fields are selected: SELECT

Otherwise: BLANK

**NOTE**

- Any un-edited DATA fields remain at their current values when USE ALL KEY is pressed.
- SOFT KEY sequencing shall be as follows:

If CANCEL , then the SELECT DATUM menu will be displayed.

If USE ALL , then the MAP/DATUM ENTRY menu will be displayed.

**NOTE**

If **CANCEL** is selected, all information up to this point will be deleted.

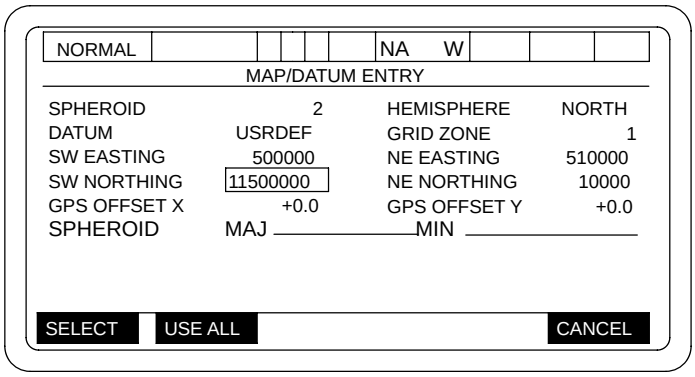


06pc241t

If **USE ALL** , all information will be locked in and the SETUP AND INFORMATION MENU will be displayed.

# 2-15B PDFCS INITIALIZATION - CONTINUED

## 2-15B.2 Initializing - Continued

(4) NAV UPDATE – Navigation Subsystem Update is performed as follows:

(a) With the Gun Tube in Travel Lock, park the howitzer at a known Survey Control Point (SCP) with the left sprocket within one meter of SCP.

(b) Box in *NAV UPDATE and press the SELECT soft key. This will bring up the NAVIGATION SUBSYSTEM UPDATE menu.

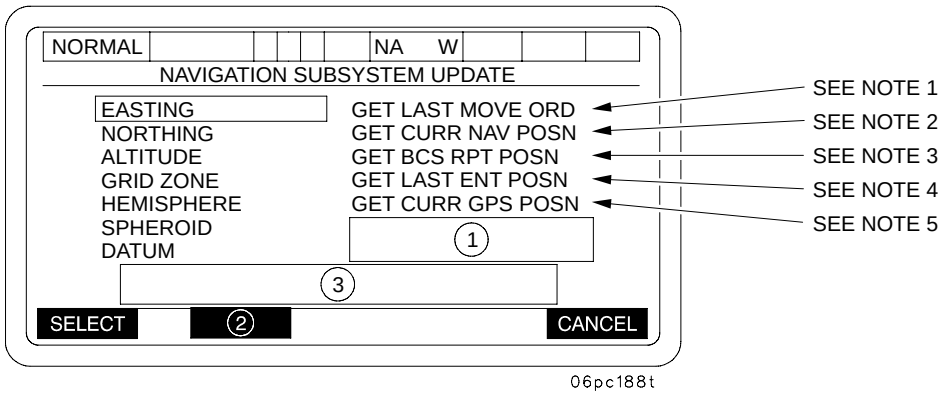


**NOTE**

The datum to be used is selected from the SETUP AND INFORMATION menu (Enter MAP/DATUM menu)

(1) This field contains OPERATOR PROMPTS and selections which depend on the current status of the NAVIGATION SUBSYSTEM

(2) When ALTITUDE SELECTED – **+/-**

otherwise – **USE ALL**

(3) This field contains OPERATOR PROMPTS for updating the values of: EASTING, NORTHING, ALTITUDE, and GRID ZONE:

When EASTING is selected:
Type EASTING 0 to 999999
Press ENT key

When NORTHING is selected:
Type NORTHING 0 to 10000000
Press ENT key

When ALTITUDE is selected:
Type ALTITUDE –1,000 to 10,000
Press ENT key

When GRID ZONE is selected:
Type GRID ZONE 1 to 60
Press ENT key

HEMISPHERE = NORTH or SOUTH
SPHEROID = 1 . . 9 and A . . I and USRDEF (not modifiable by operator)
DATUM = See Table in Appendix J (not modifiable by operator on this display)

## 2-15B PDFCS INITIALIZATION - CONTINUED

### 2-15B.2 Initializing - Continued

NOTE 1: Blank if no Move Order occurred since the last power up of the PDFCS.

NOTE 2: Blank when Navigation Subsystem is not available.

NOTE 3: Available if position data has been sent from the BCS. Selection disappears when PDFCS operator performs Nav Update or Move Order.

NOTE 4: Last coordinates on which position update was performed. Blank if operator has pressed the ARRIVED key at a position area since the last position update.

NOTE 5: Field is blank when the following conditions exist:

a. Navigation subsystem functionality not currently available.

b. GPS position data not currently available from the Navigation subsystem.

c. The GPS position data currently available has an estimated probable error greater than the navigation devices' "poor GPS data limit".

If the available GPS data has an estimated probable error greater than the Navigation device "Good GPS data limit", but less than or equal to the navigation device "Poor GPS data limit" when this menu item is selected, then the following alert will be placed on the soft key line:

USE DGRD GPS DATA? YES NO

If the YES soft key is pressed, then the available GPS data shall be used to update the listing, Northing, and Altitude fields on the menu. If the NO soft key is pressed, then the Easting, Northing, and Altitude fields on the menu will not be updated with the available GPS data.

**NOTE**

Use in accordance with unit SOP.

(c) RESTART REQUIRED - This prompt will appear in field (1). With the gun tube in travel lock, the Howitzer must be positioned at a Survey Control Point (SCP) with the left front sprocket within one meter on the SCP. No selection of RESTART REQUIRED is required, it will happen automatically and a full alignment will be performed. Enter the SCP data of EASTING, NORTHING ALTITUDE and GRID ZONE. When all data is entered, double check the SCP coordinates and MAP/DATUM SPHEROID, DATUM, and HEMISPHERE displayed on the screen. If it is not correct, make any correction. If it is correct, press the USE ALL soft key. The following prompt will be displayed:

"NAV POSITION UPDATE ABOUT TO START" "ARE YOU SURE" "YES" "NO"

Press the "YES" soft key, and the Navigation Position Update will be started. The SETUP AND INFORMATION menu will appear. The prompt "CMD" will appear in field (6), and then be replaced by the Align Time to Go countdown. Proceed with the rest of Initialization.

(d) NAV POSITION UPDATE - If this prompt is displayed in field (1), then only a Navigation Subsystem Position Update is required. With the gun tube in travel lock, the Howitzer must be positioned at a Survey Control Point (SCP), with the left front sprocket within one meter of the SCP. Enter the SCP data of EASTING, NORTHING and ALTITUDE. When all data is entered, double check the SCP coordinates and MAP/DATUM SPHEROID, DATUM, GRID ZONE and HEMISPHERE displayed on the screen. If it is not correct, make any correction. If it is correct, press the USE ALL soft key. The following prompt will be displayed:

"NAV POSITION UPDATE ABOUT TO START" "ARE YOU SURE" "YES" "NO"

Press the "YES" soft key, and the Navigation Position Update will be started. The SETUP AND INFORMATION menu will appear. The prompt "CMD" will appear in field (6), and then be replaced by the Align Time to Go countdown. Proceed with the rest of Initialization.

## 2-15B PDFCS INITIALIZATION - CONTINUED

### 2-15B.2 Initializing - Continued

(e) NAV RESTART – If the prompt NAV POSITION UPDATE is highlighted and selected, a message prompt “CHANGE TO RESTART” “YES” “NO” will appear. Press the “YES” soft key. “FORCE NAV RESTART” will appear. Press “USE ALL” then press the “YES” soft key to “ARE YOU SURE” prompt, the SETUP AND INFORMATION menu will be displayed and CMD will be displayed in field (6). This will be replaced with the Align Time to Go count down timer. The Navigation Subsystem aligns itself automatically.

**NOTE**

The Navigation Subsystem has 3 modes of alignment; Stored Heading Alignment, Normal Alignment and Dynamic Alignment.

(1) Stored Heading Alignment – Will occur only if the previous PDFCS shutdown was orderly and the Howitzer or Turret has not moved since the last shutdown. This Alignment will take a maximum of 90 seconds, and will start as soon as the power is applied to the Navigation Subsystem. A NAV UPDATE is still required. But since the Howitzer has not moved since the last shutdown, all the NAV UPDATE data should be correct and only pressing the USE ALL soft key is required. If the Howitzer has been moved since the last shutdown, or the last shutdown was abnormal, or the Howitzer was moving during the last shutdown procedure, the Stored Heading Alignment will automatically be rejected and after a NAV UPDATE is performed the Navigation Subsystem will automatically perform a Normal Align.

(2) Normal Alignment – Will occur when ever a Stored Heading Alignment can not be performed. This alignment will take a maximum of 15 minutes (900 seconds). After the NAV UPDATE is performed and accepted, the Normal Alignment will automatically start, and the Align Time to Go counter will start counting down to 0. During the countdown, a message “OK TO MOVE OR SHOOT” “ACK” may appear before the countdown reaches 0. This means the Navigation Subsystem estimated Azimuth Error is within the bounds that are safe to move or shoot. At this point, a Move Order or Fire Missions may be performed. If the PLGR data is valid (i.e. the “A” is gone) the Align Time to Go counter will continue to countdown while the Howitzer is moving. If the PLGR is not valid (i.e. “A” is on), the timer will stop counting during movement and ZUPTs will be requested.

(3) Dynamic Alignment – A Dynamic Alignment is nothing more than a moving Normal Alignment, but the following conditions must be met: The PLGR must have data (i.e. the “A” is gone) and a NAV UPDATE must have been performed prior to movement. If these conditions are true, then the Howitzer may be moved before the “OK TO MOVE OR SHOOT” “ACK” is displayed. Move Orders and Fire Missions can not be performed, but as long as the PLGR is valid (i.e. the “A” is gone), the Align Time to Go timer will continue to countdown and the Navigation Subsystem will not require a RESTART. Moving prior to the “OK TO MOVE OR SHOOT” “ACK” must be done in accordance with Unit SOP.

# 2-15B PDFCS INITIALIZATION - CONTINUED

## 2-15B.2 Initializing - Continued

**NOTE**

PDFCS supports two modes of Navigation Update; a Position Update and a Navigation Subsystem Restart. Normally, the Navigation Subsystem will align itself automatically, so only a Position Update is required.

(4) To perform a Nav Position Update, if entries are correct per unit SOP. If incorrect, this indicates that BCS DATA Transfer of the Map Mod was not successful in the previous step; press CANCEL, to return to the SETUP AND INFORMATION menu and repeat the BCS DATA XFER procedure to get initialized by BCS. If GRID ZONE, HEMISPHERE and SPHEROID entries are correct, then enter, in turn, EASTING, NORTHING, and ALTITUDE as follows: for each item, first box in the item, then press SELECT key. Use PDFCS keypad to type in value. Press ENT key. Press USE ALL to complete the NAV UPDATE and return to the SETUP AND INFORMATION menu.

If invalid data is entered, the Navigational System will reject it and ask for data re-entry. Press ACK key to acknowledge Alert and re-enter data.

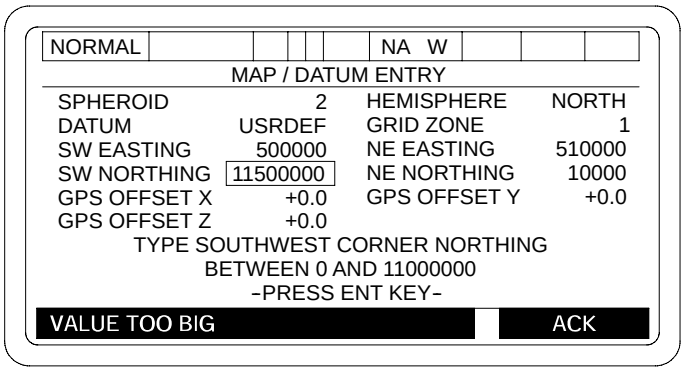


06pc116m

(5) AMMO INVENTORY - Ammunition inventory must be done before the PDFCS will accept a fire mission. Inventories must be complete and accurate before the system initialization is completed. The three parts of the inventory records, Shells, Propellants, and Fuzes, are updated as follows:

## 2-15B PDFCS INITIALIZATION - CONTINUED

### 2-15B.2 Initializing - Continued

(a) Box in AMMO INVENTORY from the SETUP AND INFORMATION menu. Then press SELECT key. This will cause an INVENTORY MANAGEMENT menu to be displayed. Box in either EDIT CURRENT PALADIN or EDIT BCS PROVIDED data. Press SELECT key. This will cause an INVENTORY MANAGEMENT menu to be displayed.

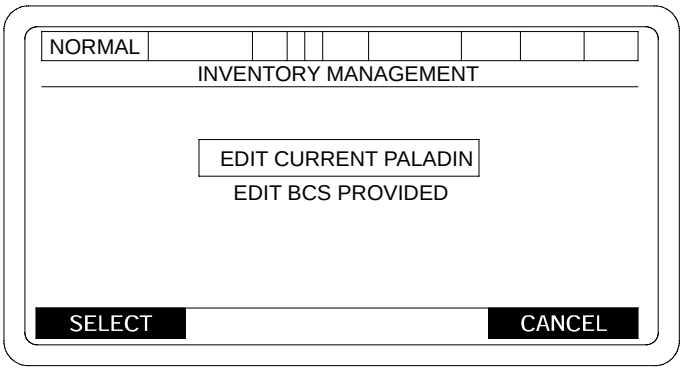


06pc635m

**NOTE**

- This menu will not be displayed when BCS Provided Inventory Data is not available at the PDFCS.
- You can request the POC to provide your Ammo Inventory from the BCS if you know it is a correct count. Use BCS DATA XFER to GET AMMO STATUS (para 2-15B.2.d(2)).

# 2-15B PDFCS INITIALIZATION - CONTINUED

## 2-15B.2 Initializing - Continued

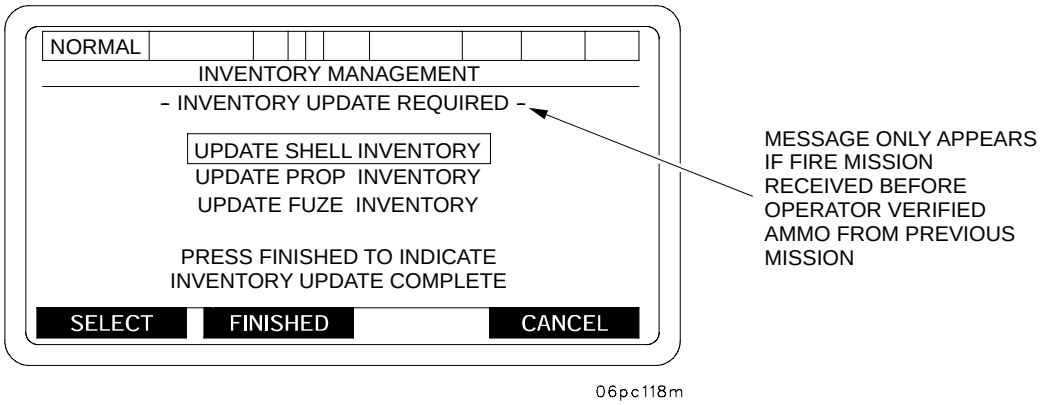


**NOTE**

If a Fire Mission is activated while in any of the ammunition inventory submenus, all valid complete entries will be saved.

FINISHED = When the Finished key is pressed the ammunition inventory shall be reviewed to insure each group of projectiles has at least one propellant and each group of propellants has at least one projectile. If a projectile is found without a propellant or a propellant without a projectile, the PDFCS will display Projectile/Propellant Mismatch menu.

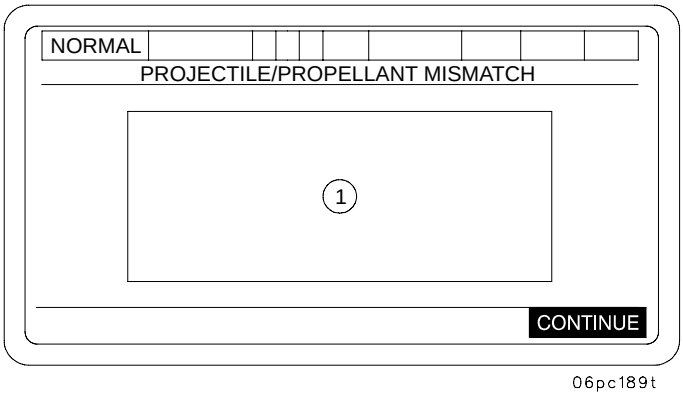


CONTINUE = Will display INVENTORY MANAGEMENT menu.

1 = NO "US" PROJECTILE MATCH and or
NO "US" PROPELLANT MATCH

**NOTE**

Use Up and DOWN keys to scroll.

# 2-15B PDFCS INITIALIZATION - CONTINUED

## 2-15B.2 Initializing - Continued

(b) Box in UPDATE SHELL INVENTORY. Press SELECT key. This will cause an UPDATE SHELL INVENTORY menu to be displayed.

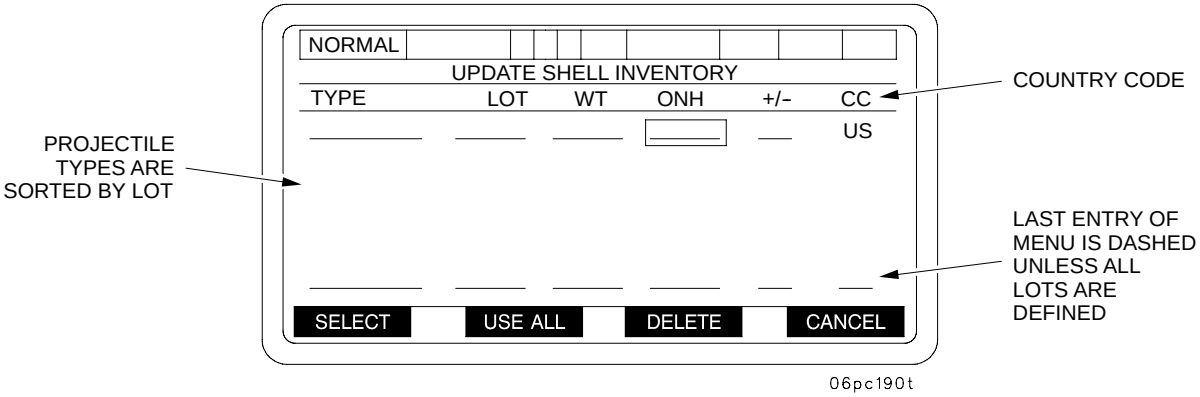


**NOTE**

Pressing the DELETE key will cause the selected shell to be deleted from inventory no matter where on the inventory line the selection box is positioned.

(c) To add a new entry, box in the first blank line. Press SELECT key. This will cause an UPDATE SHELL INVENTORY-SELECT SHELL TYPE menu to be displayed.

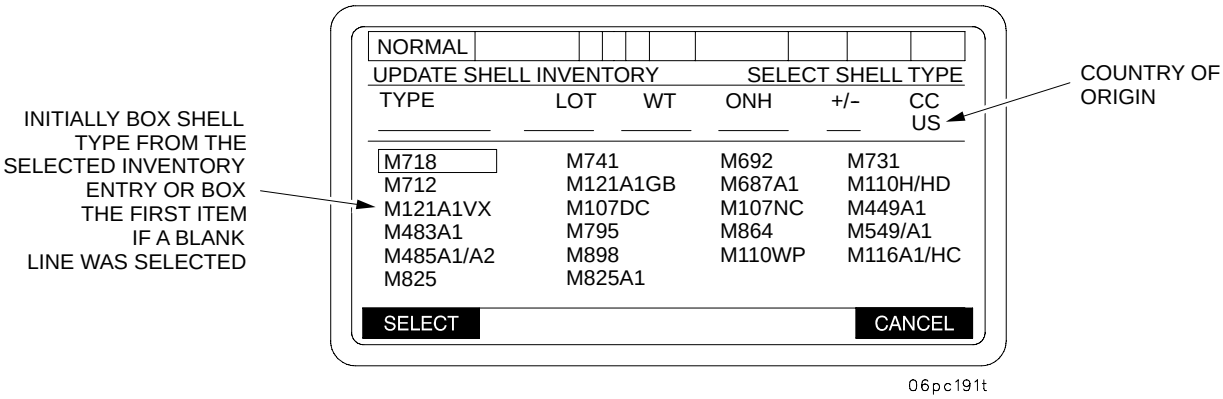

## 2-15B PDFCS INITIALIZATION - CONTINUED

### 2-15B.2 Initializing - Continued

(d) Press SELECT key to display a SELECT LOT menu.

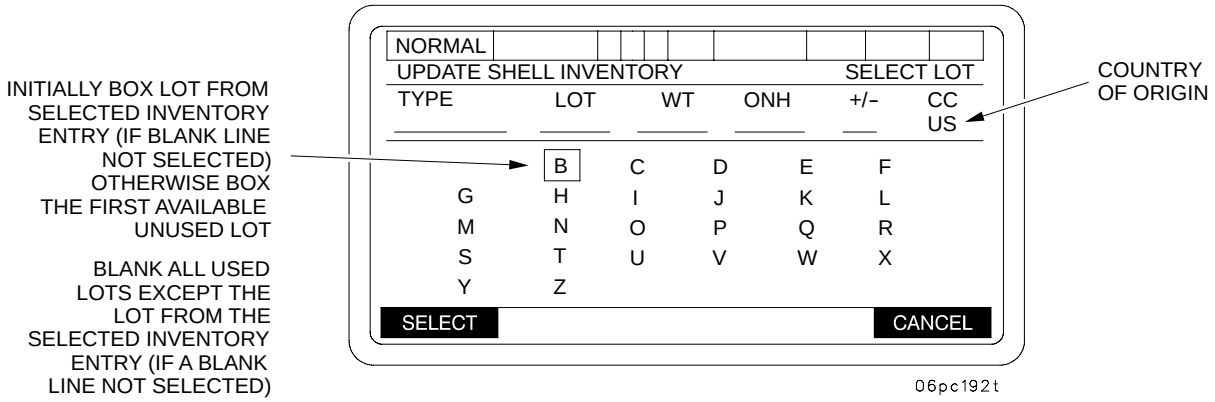


(e) Box in Lot choice and press SELECT key. This will cause a lot designator to be assigned to the selected shell. Once a lot selection is made, that designator (letter) will disappear. This prevents using same lot twice. When the SELECT key is pressed, an EDIT LOT/TYPE DESIGNATION menu will be displayed.

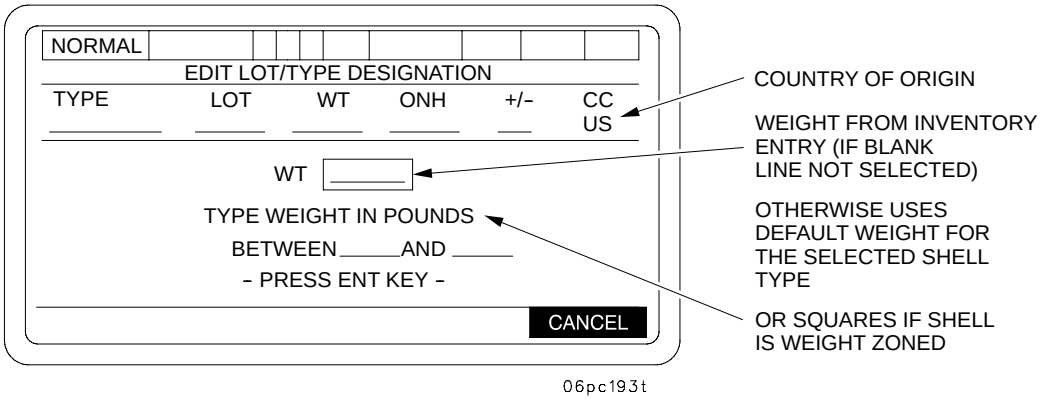


(f) If shell weight is not the same as default weight, type in new weight and press ENT key. This will cause the UPDATE SHELL INVENTORY menu to be displayed.

**NOTE**

Weight will be displayed in pounds or squares.

# 2-15B PDFCS INITIALIZATION - CONTINUED

## 2-15B.2 Initializing - Continued

(g) Move box to proper column (ONH, ADD or SUB) in desired line and press SELECT key. A prompt to TYPE SHELL QUANTITY will be displayed. Type in new quantity and press ENT key. New quantity will be displayed.

(h) When all shell data has been updated or edited, press USE ALL key to return to INVENTORY MANAGEMENT menu.

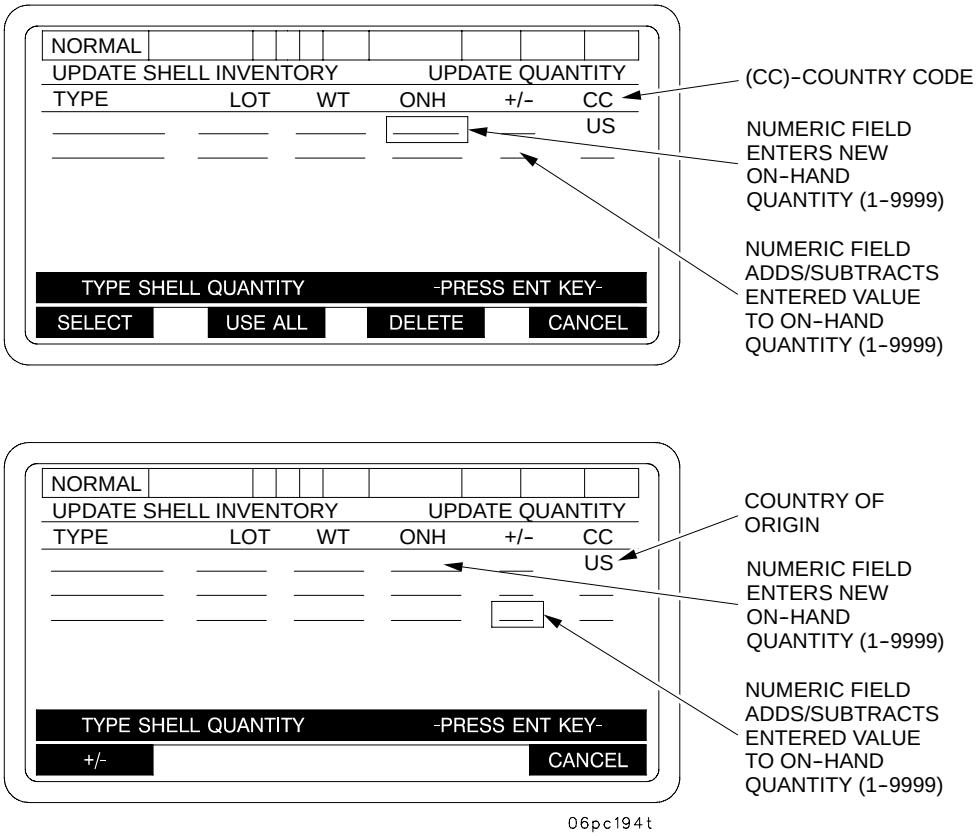

# 2-15B PDFCS INITIALIZATION - CONTINUED

## 2-15B.2 Initializing - Continued

(i) Box in UPDATE PROP INVENTORY on INVENTORY MANAGEMENT (UPDATE) menu. Press SELECT key to display UPDATE PROP INVENTORY menu.

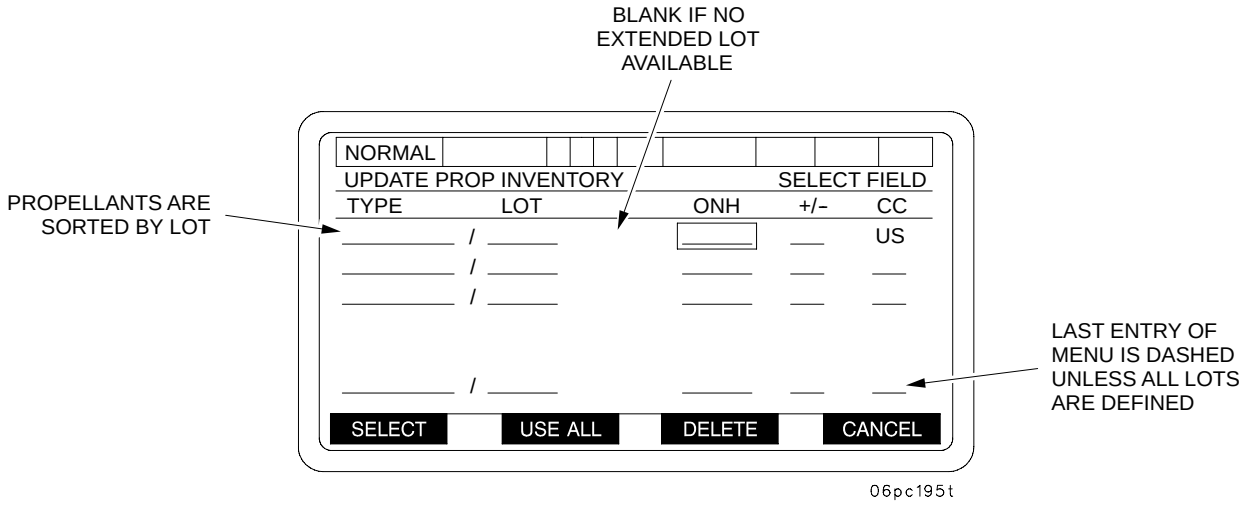


**NOTE**

The DELETE key shall cause the selected propellant to be deleted from inventory no matter where on the inventory line the selection box is positioned.

(j) To add a new entry, box in the first blank line on UPDATE PROP INVENTORY menu. Press SELECT key to display SELECT PROP TYPE menu. Box in propellant type and press SELECT key.

**NOTE**

The data displayed on the third line of this display is that given in the selected inventory entry (either a blank line or an existing entry) and is updated as entries are made.

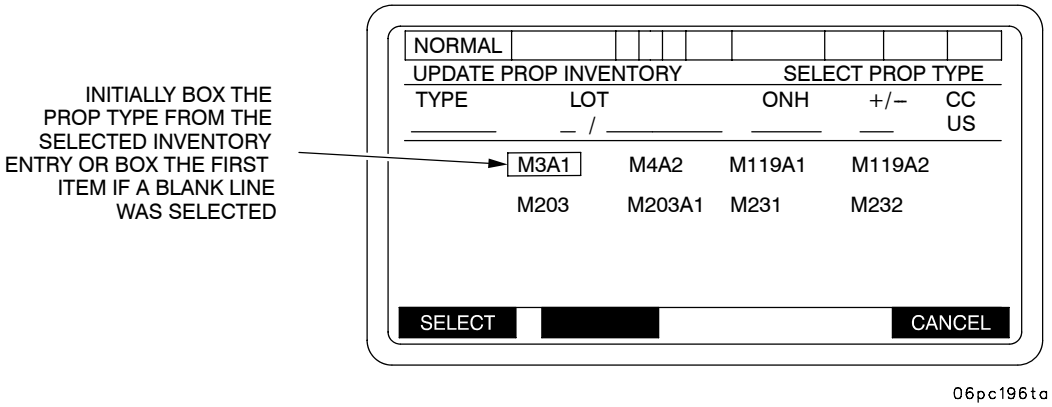

# 2-15B PDFCS INITIALIZATION - CONTINUED

## 2-15B.2 Initializing - Continued

(k) When the SELECT key on the Select Prop Type screen is pressed the ENTER LOT menu will be displayed.

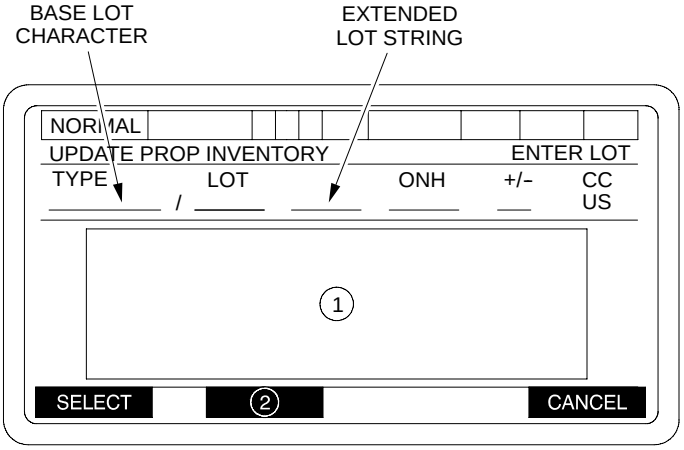


06pc197t

(1) On initial entry to this display, the cursor box is on the base lot from the selected inventory entry (if a blank line was not selected). Otherwise, box the first available unused base lot letter. The base lot location in the upper display is highlighted in reverse video. All base lots currently in the propellant inventory are deleted from the selection area (except for the selected inventory entry base lot if not on a blank inventory line).

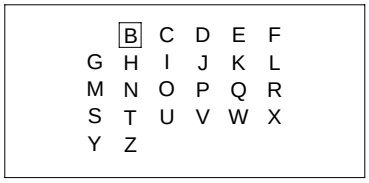


06pc127m

After the base lot is selected, the extended lot editing function is entered. All alphanumeric characters and highlight movement characters are made available for operator selection. The reverse video highlight is initially moved to the first character position (left most character) in the extended lot string. Highlight movement will wrap at the ends of the extended lot string. Pressing the CLR key will erase the character under the reverse video highlight.

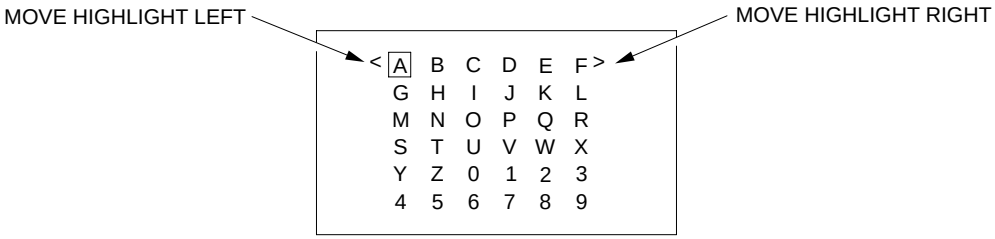


06pc127m

(2) Blank - until extended lot string editing begins
USE ALL - while editing the extended lot string

# 2-15B PDFCS INITIALIZATION - CONTINUED

## 2-15B.2 Initializing - Continued

When USE ALL key is pressed, the extended string is compared with other extended lot codes in inventory. If a duplicate extended lot string is found, a short error message will be displayed.

DUPLICATE EXTENDED LOT FOUND | ACK

When ACK is pressed, the extended lot editing function will be resumed and the highlight will be at the last character position prior to pressing USE ALL. Before pressing USE ALL, enter a different extended lot.

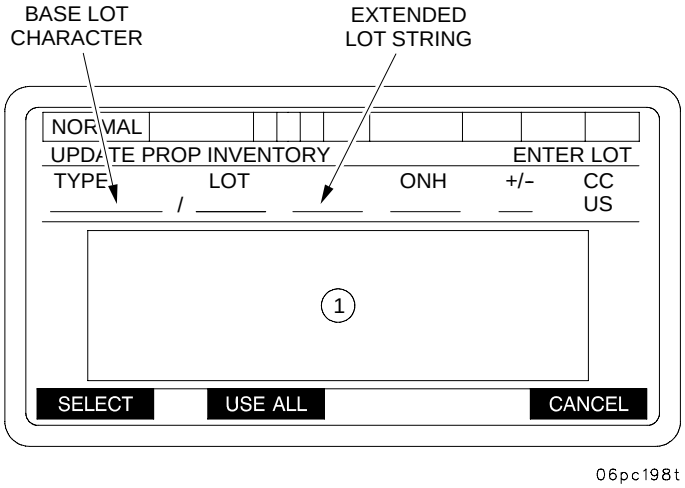


(l) When the USE ALL key is pressed, the Update Prop Inventory menu is displayed. Box in either +/- column and press SELECT key. Type in new quantity and press ENTER key. New quantity will be displayed.

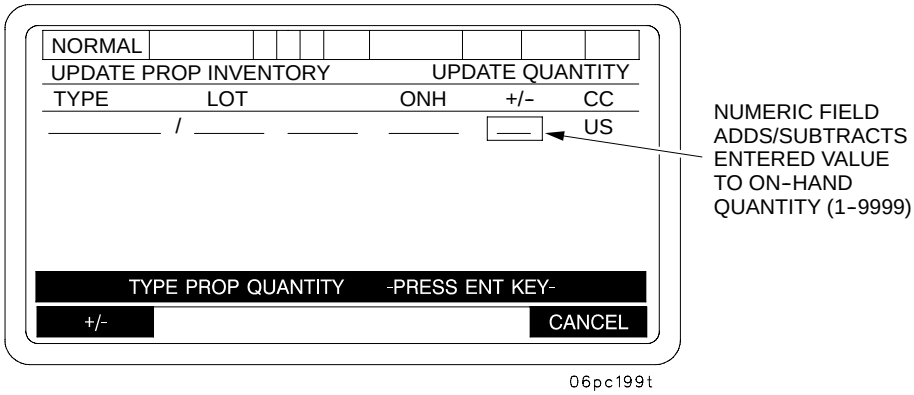


**NOTE**

The +/- soft key will appear when the +/- column is selected. If you select the ONH column, the +/- soft key will not appear.

# 2-15B PDFCS INITIALIZATION - CONTINUED

## 2-15B.2 Initializing - Continued

(m) When propellant types have been updated or edited, press USE ALL key. This will cause the INVENTORY MANAGEMENT menu to be displayed.

(n) Box in UPDATE FUZE INVENTORY on INVENTORY MANAGEMENT menu. Press SELECT key to display UPDATE FUZE INVENTORY - SELECT FIELD menu. To add a new entry, move box to the first blank line. Press SELECT key. A SELECT FUZE TYPE menu will be displayed.

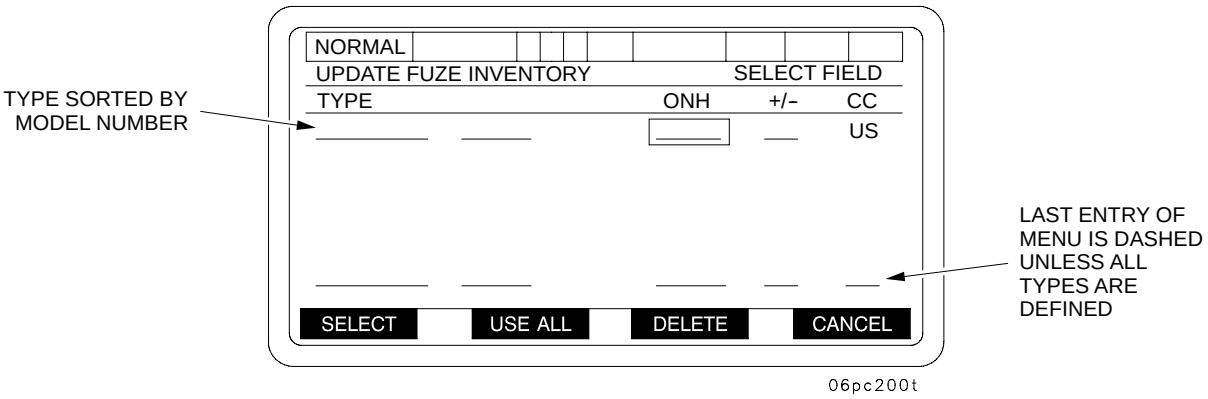


**NOTE**

The DELETE key shall cause the selected fuze to be deleted from inventory no matter where on the inventory line the selection box is positioned.

(o) Box in FUZE TYPE and press SELECT key. Move box to proper column (ONH, or +/-). Press SELECT key. Type in quantity and press ENT key.

**NOTE**

The data displayed on the third line of this display is that given in the selected inventory entry (either a blank line or an existing entry) and is updated as entries are made.

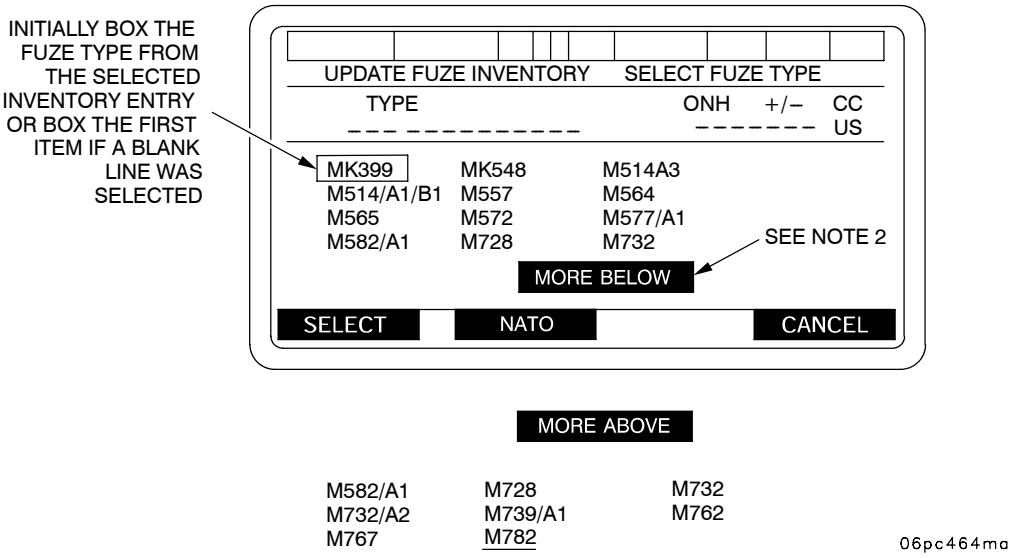

# 2-15B PDFCS INITIALIZATION - CONTINUED

## 2-15B.2 Initializing - Continued

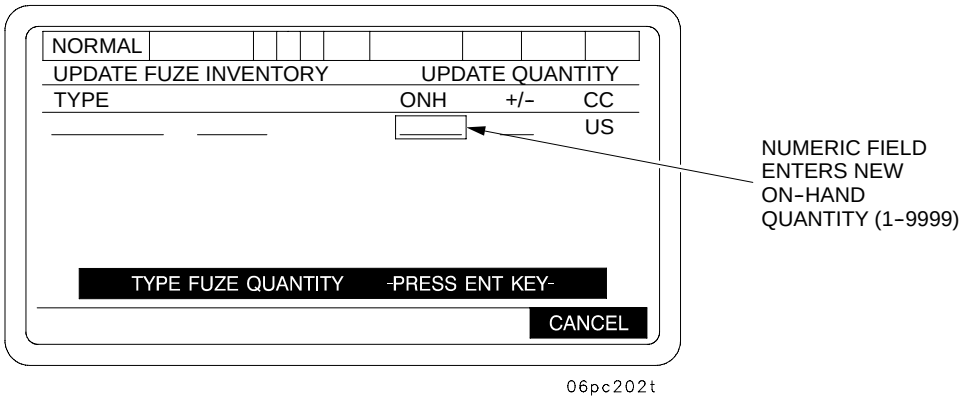


**NOTE**

The +/- Softkey will appear when the +/- column is selected. If you select the ONH column, the +/- Softkey will not appear.

(p) When fuzes have been updated, press USE ALL key to return to INVENTORY MANAGEMENT menu.

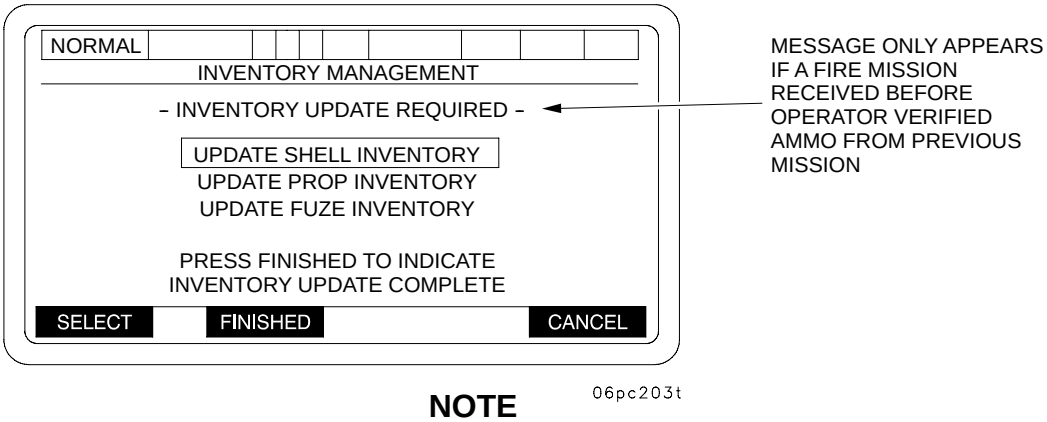


**NOTE**

- If a fire mission is activated while in any of the ammunition inventory sub-menus, all valid complete entries with consistent projectile/propellant, country code matches shall be saved.
- If the CANCEL Softkey is selected all edits will be ignored.

FINISHED = When the finished key is pressed the ammunition inventory shall be reviewed to insure each group of projectiles has at least one propellant and each group of propellants has at least one projectile. If a projectile group is found without a propellant or a propellant without a projectile, the PDFCS will display PROJECTILE/PROPELLANT MISMATCH menu. Pressing the CONTINUE Softkey on this menu will return operator to the INVENTORY MANAGEMENT menu, at which time the operator has to update SHELL/PROP inventory.

## 2-15B PDFCS INITIALIZATION - CONTINUED

### 2-15B.2 Initializing - Continued

(q) When all ammunition data has been entered or updated, press FINISHED key to display the SETUP AND INFORMATION menu.

(6) PROPELLANT TEMPERATURE - Must be entered in order to complete initialization. After ammunition has been received, a propellant temperature should be obtained by the crew using a calibrated propellant temperature gage. Propellant temperatures are entered as follows:

**NOTE**

- Accurate propellant temperatures must be entered in order for PDFCS to accurately compute Muzzle Velocity Variances.
- Numerical value must be entered before sign. Default sign is (+).

(a) Box in PROP TEMP from SETUP AND INFORMATION menu. Press SELECT key. A PROPELLANT TEMPERATURE menu will be displayed. Type in correct temperature and press ENT key.

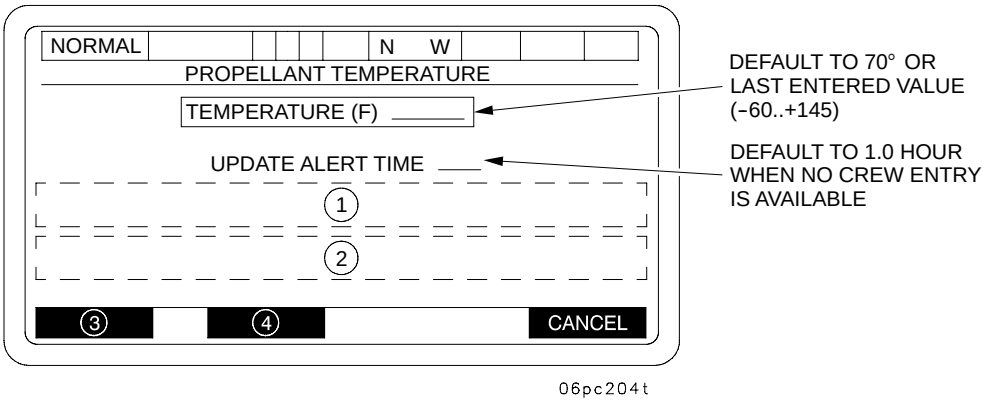


(1) TIME TO GO XX:XX (HOURS:MINUTES) OR TIME EXCEEDED

(2) WHEN TEMPERATURE SELECTED

TYPE TEMPERATURE IN FAHRENHEIT DEGREES: -60 TO +145
- PRESS ENT KEY -

WHEN UPDATE ALERT TIME SELECTED

TYPE UPDATE TIME IN 0.5 HOUR INCREMENTS 0.5 TO 2.0
- PRESS ENT KEY -

(3) BLANK - When TEMPERATURE or UPDATE ALERT TIME selected

SELECT - When item is not selected

(4) USE ALL - When no item is selected

+/- When temperature is selected
BLANK - When UPDATE ALERT TIME is selected

## 2-15B PDFCS INITIALIZATION - CONTINUED

### 2-15B.2 Initializing - Continued

(b) If a temperature outside allowable range is input, operator alert “VALUE TOO BIG” or “VALUE TOO SMALL” will appear when ENT key is pressed. The ACK key must be pressed to return to the PROPELLANT TEMPERATURE menu to enter correct temperature.

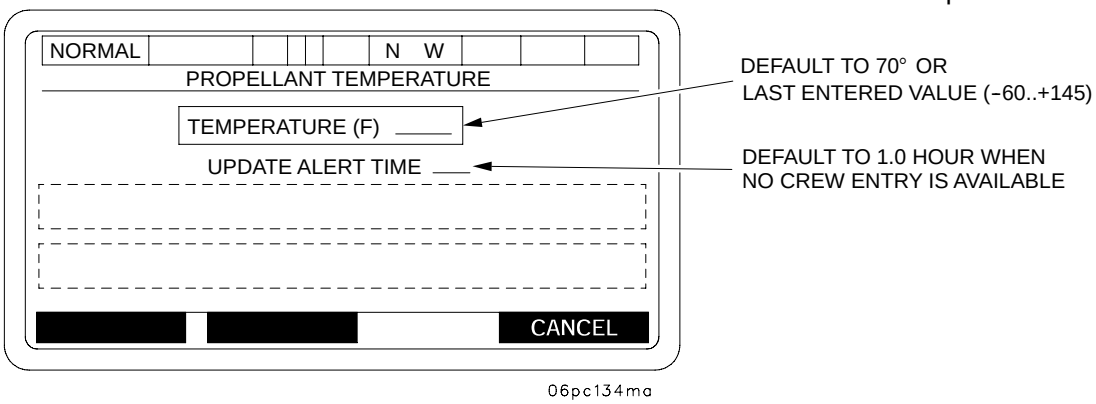


(c) A propellant temperature is input during initialization by selecting PROP TEMP from the SETUP AND INFORMATION menu to display the PROPELLANT TEMPERATURE menu. The operator is allowed to enter the propellant temperature. If no temperature is entered the PDFCS will use the default value of 70 degrees F. To enter the propellant temperature, place cursor to TEMPERATURE (F), press the soft key under SELECT prompt. An operator prompt “TYPE TEMPERATURE IN FAHRENHEIT DEGREES -60 TO +145 --PRESS ENTER KEY” will appear. Type in propellant temperature and press ENT key. In addition, the PDFCS incorporates a timed audible and visual alert to the operator to warn that a propellant temperature update is required. The time interval to use for the audible and visual alerts are selectable on the PROP TEMP menu, from 30 minutes (0.5 hours) to 120 minutes (2.0 hours) in 30 minute increments. The alert time is defaulted to 1.0 hour when no time is entered by the operator. To set alert time, place cursor on UPDATE ALERT TIME, and press soft key under SELECT prompt. An operator prompt, “TYPE UPDATE TIME IN 0.5 HOUR INCREMENTS 0.5 TO 2.0, PRESS ENTER KEY. When the operator has successfully entered the propellant temperature and alert time return to SETUP AND INFORMATION menu by pressing soft key under USE ALL prompt. When correct propellant temperature and alert time have been entered, pressing USE ALL will display the SETUP AND INFORMATION menu.

(7) MUZZLE VELOCITY VARIANCE (MVV) - To set the minimum number of rounds that will be used in calculating muzzle velocity variances, select the MVV ROUNDS from the SETUP AND INFORMATION screen.

NOTE: 1. The entry field will display the current MVV rounds selected and will default to 4 on systems initialization.

2. To use the MVV, you must have an extended lot code in the PDFCS inventory.

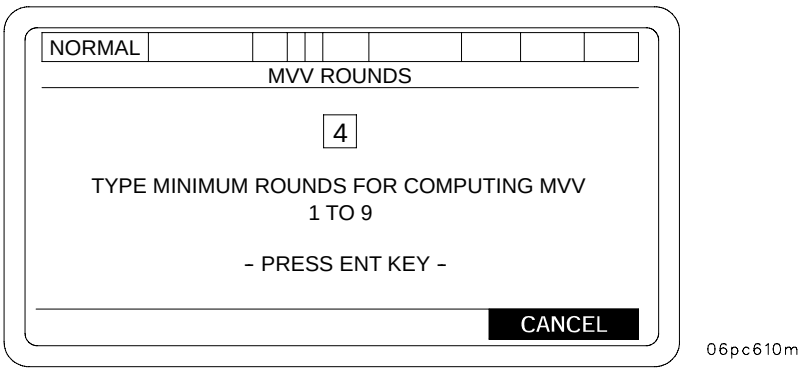

## 2-15B PDFCS INITIALIZATION - CONTINUED

### 2-15B.2 Initializing - Continued

(8) TOT RESPONSE TIME – This is used to set crew time response for a specific fire mission. The data tells the PDFCS how much advance warning a crew needs before a Time on Target (TOT) mission is to be fired. This data is entered as follows:

(a) Box in TOT RESPONSE from SETUP AND INFORMATION menu. Press SELECT key to display a TIME ON TARGET CREW RESPONSE TIME menu.

(b) Enter data for response time and press the ENT key. This will return the display to the SETUP AND INFORMATION menu.

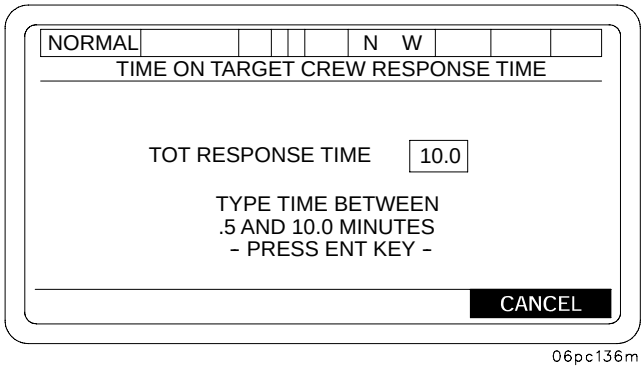


(9) LOAD ELEVATION – This data is entered in the PDFCS to specify an elevation that the gun tube will automatically return to after firing when the LOAD key is pressed on the PDU panel. Enter LOAD ELEVATION as follows:

(a) Box in LOAD ELEVATION from the SETUP AND INFORMATION menu. Press SELECT key to display a TUBE LOAD ELEVATION menu.

**CAUTION**

Do not enter an elevation greater than 300 mils. Settings above 300 mils may result in breech failing to close and could cause unnecessary wear on spring pack.

**NOTE**

Numerical value must be entered before sign. Default sign is (+).

(b) Type in desired elevation data and press ENT key. The SETUP AND INFORMATION menu will be displayed.

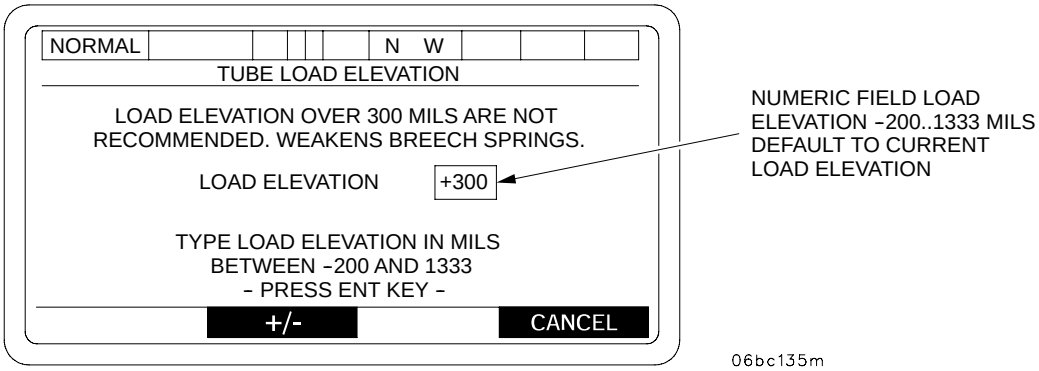

## 2-15B PDFCS INITIALIZATION - CONTINUED

### 2-15B.2 Initializing - Continued

(10) SECTOR OF FIRE – Used to define the howitzer's sector of fire. Data is entered as follows:

(a) Box in SECTOR OF FIRE from SETUP AND INFORMATION menu. Press SELECT key to display DEFINE SECTOR OF FIRE menu.

(b) Box in LEFT LIMIT OF SECTOR. Press SELECT key. Enter data. Press ENT key. Move box to AOF. Press SELECT key. Enter data. Press ENT key. Move box to RIGHT LIMIT OF SECTOR. Press SELECT key. Enter data. Press ENT key.

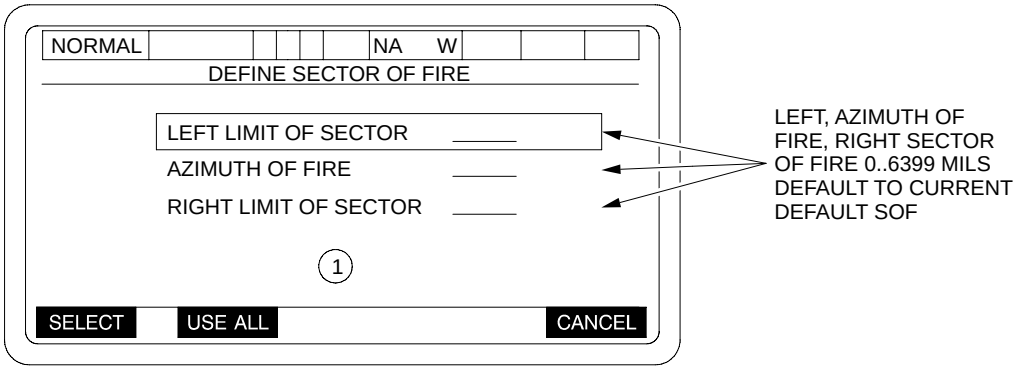


06pc205t

IF LEFT = RIGHT

ERROR - LEFT AND RIGHT EQUAL ACK

If AZIMUTH OF FIRE is not to RIGHT OF LEFT LIMIT and LEFT OF RIGHT LIMIT.

ERROR - AZIMUTH OF FIRE NOT IN SECTOR ACK

(1) BLANK: No selection made

Selection made:

"TYPE AZIMUTH BETWEEN 0 AND 6399 MILS"

"PRESS ENT KEY"

**NOTE**

- Operator entered Sector of Fire data will be used by the PDFCS during Move Orders to help orient the vehicle during emplacement at a Firing Point/Firing Area.
- During Emplacement after a Move Order, this AOF will be "Base Azimuth" for 3200 Deflection.
- SECTOR OF FIRE entered by the operator will be used to calculate ballistic if BCS has not sent SECTOR OF FIRE for prescribed location (FIRING AREA/POINT).

(c) When all correct data has been entered, press USE ALL key to enter data and return to SETUP AND INFORMATION menu. Operator entered Sector of Fire data will update the Site Data display.

# 2-15B PDFCS INITIALIZATION - CONTINUED

## 2-15B.2 Initializing - Continued

(d) When all initialization data (Asterisk items from SETUP AND INFORMATION menu) has been entered, and the navigation subsystem alert “OK TO MOVE OR SHOOT”, “ACK” has been displayed and the ACK key pressed, then press CANCEL key on SETUP AND INFORMATION menu to bring up a SECTION IN ORDER AT INITIALIZATION POINT display.

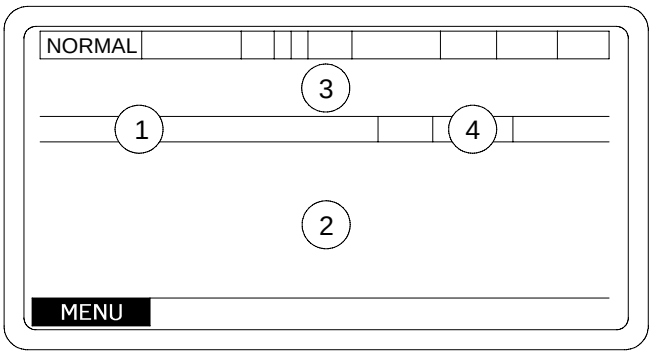


06pc138m

1 “FPF/PRI EXISTS” FPF/PRI TARGET EXISTS IN STORED TARGET TABLE
“NO FPF/PRI EXISTS” - FPF/PRI TARGET DOES NOT EXIST IN STORED TARGET TABLE

2 “SECTION IN ORDER AT LOGISTICS POINT” - ARRIVAL LOCATION IS LOGISTICS POINT “SECTION IN ORDER AT INITIALIZATION POINT” - ARRIVAL LOCATION IS INITIALIZATION POINT

3 DO NOT MOVE - NO FPF/PRI EXISTS
DO NOT MOVE / DO NOT LOAD - FPF-PRI TARGET EXISTS

4 TUBE TEMPERATURE STATUS

## 2-15B PDFCS INITIALIZATION - CONTINUED

### 2-15B.3 Initialization After an Orderly Shutdown.

**WARNING**

When operating the PLGR on external power with BA-5800 lithium battery installed, the battery may explode. Ensure battery is removed before connecting power cable to prevent serious injury or death.

**NOTE**

PMVS must be installed and connected prior to turning the vehicle MASTER power switch ON.

During PDFCS operation, it may become necessary to power down and then back up; e.g., a system lockup occurs.

**NOTE**

After PDFCS has been powered down, the PDFCS will power up and be operational in approximately 3-4 minutes.

Power down in this form causes an orderly shutdown, and some of the PDFCS data is saved. An orderly shutdown also occurs when the power is turned off after normal operations. Some of the data saved on orderly shutdown is Net Access, Net Address, Ammo Inventory, Navigation Data (location where system was powered down), TOT Response, Load Elevation, and the last operator-entered Sector of Fire. When the system is turned back on from an orderly shutdown, step-by-step initialization is not necessary, although action on all asterisk marked items on the SETUP AND INFORMATION menu must be accomplished. The process for initialization after an orderly shutdown is as follows:

a. System Power Up. Set MASTER switch and Power Conditioner Unit-2 circuit breakers to ON.

With the PLGR in the PLGR mount and all external cables attached, press the ON/BRT key on the PLGR key pad. The PLGR should power up automatically and perform its self-test (BIT). Operate the PLGR in accordance with the PLGR TM 11-5825-291-13.

If the PLGR does not have a current key (i.e. the PLGR was previously “zeroized,” newly installed or the key has expired), then load a valid key in accordance with the PLGR TM 11-5825-291-13, Section 3.6.

**NOTE**

To load a key, the DRUH must be off, or the P4 DRUH-PLGR Signal Connector must be disconnected to cause a PLGR COM FAIL. Simple re-attachment of P4 DRUH-PLGR Signal Connector after PLGR keying will automatically cause DRUH-PLGR communications to resume if DRUH is on.

If the PLGR antenna has a clear view of the sky, turn PLGR on. If the antenna’s view of the sky is blocked (e.g. the vehicle is in a building, under tree cover or parked next to a large structure), move vehicle until the PLGR is clear.

If the vehicle can not be moved, keep PLGR turned off until the vehicle can be moved to a location with a clear view of the sky.

## 2-15B PDFCS INITIALIZATION - CONTINUED

### 2-15B.3 Initialization After an Orderly Shutdown - Continued

**NOTE**

- If the PLGR is off, the Navigation Subsystem will still accept initialization data from the PDFCS for inertial operation and the Navigation System will operate as before.
- Guidelines for conditions and times for the PLGR to obtain position data acceptable by the PDFCS.

(1) If the antenna has a clear view of the sky and PLGR has a valid position, current GPS time, current GUV key, and has stored a current satellite almanac, PLGR will be acceptable for use in about three minutes following the first turn-on of the day. It will take about 90 seconds for subsequent turn-ons. These are the normal operating conditions.

(2) If the antenna has a clear view of the sky and PLGR has a current GUV key but the PLGR doesn't have a valid position, current GPS time, or current satellite almanac, it may take up to 20 minutes after turn-on for the PLGR to output data of acceptable accuracy.

(3) If the PLGR has a valid position, current GPS time, current key, and current satellite almanac, but the antenna is masked from a clear view of the sky when PLGR is turned on, it may take up to 20 minutes to get acceptable data after the vehicle is moved to a location with a clear view of the sky. This results from the PLGR initiating a search for all possible satellites if it can't lock on to those expected, for its current position, time, and almanac, within a reasonable time interval.

(4) If the PLGR doesn't have a current key, its data won't be acceptable for use by the PDFCS. However, assuming a clear view of the sky, it can be turned on to initialize position, time, and satellite almanac in about 20 minutes. Then when a valid key is loaded, the PLGR will be ready to go within three minutes.

**NOTE**

PMVS must be installed and connected prior to turning the vehicle MASTER power switch on.

Make sure TRAINING switch on PDU is OFF. Set POWER switch on PDU to ON. When power is first applied to the PDFCS, the display will be blank and the PDFCS will automatically perform its internal self-test (BIT). Next a screen will be displayed with this message "PDFCS OPERATING SYSTEM BOOT UP...PLEASE WAIT...", followed by an "INITIALIZATION IN PROGRESS..." screen.

**NOTE**

- The time lapse between first three screens can range from 3 to 5 minutes.
- If screen stays blank for more than 7 minutes, power down system.

A "SYSTEM VERIFICATION FAILURE" screen may be displayed only if the SYSTEM VERIFICATION report indicates a failure.

# 2-15B PDFCS INITIALIZATION - CONTINUED

## 2-15B.3 Initialization After an Orderly Shutdown - Continued

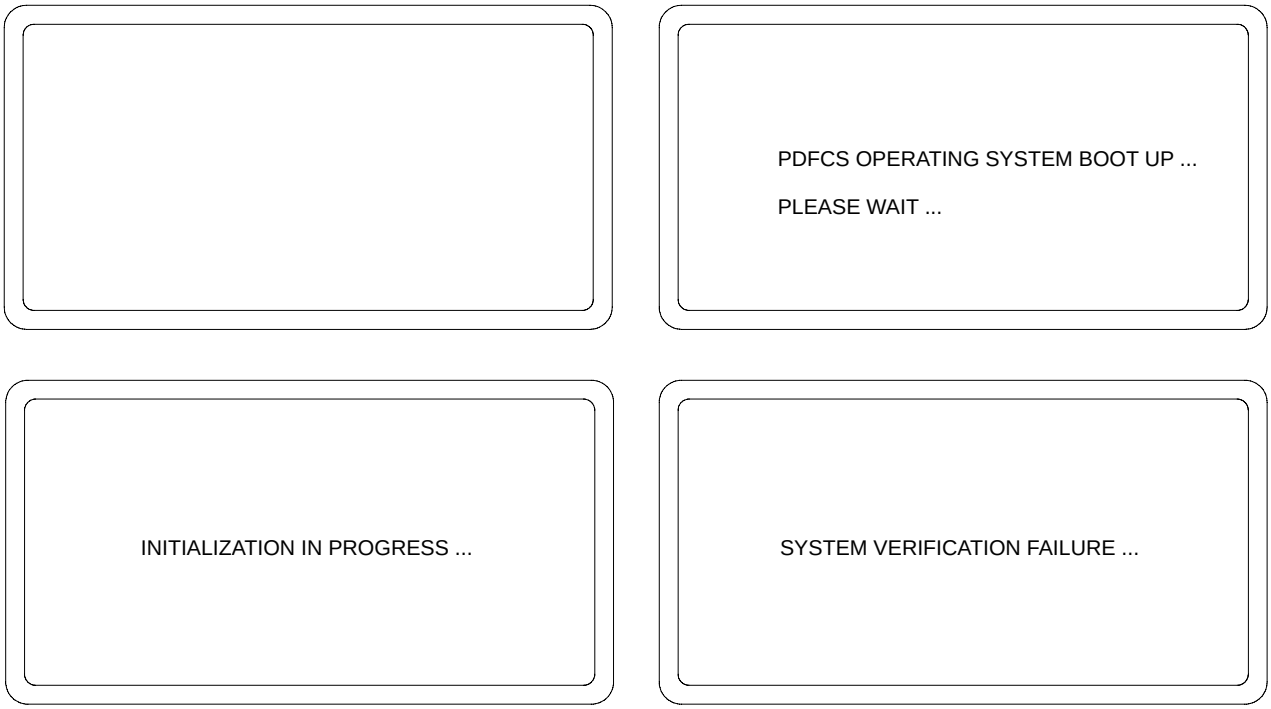


06pc414mb

After the PDFCS powers up, the PLGR screen should read:

REMOTE CONTROL
Only ZEROIZE key
activated

At this point the PLGR key pad will become inactive. The only PLGR operation allowed using the key pad is EMERGENCY ZEROIZE.

If this message is not displayed on the PLGR screen, and the Low Priority Message “GPS OUT - PLGR DISCONNECTED” is not displayed on the PDU, ensure that the DRUH-PLGR Signal Connector (P4) plug on the W17A cable is connected and secure. Once this PLGR screen is displayed, proceed with system initialization.

### NOTE

- NAV SUBSYSTEM includes: VMS, DRUH, VMS Modems
- PCU-2 SUBSYSTEM includes: PCU-2 and both Back-Up Batteries
- The switches on the PCU-2 are circuit breakers. They should be left ON at all times, so they will not wear out from being turned off and on constantly.

## 2-15B PDFCS INITIALIZATION - CONTINUED

### 2-15B.3 Initialization After an Orderly Shutdown - Continued

(5) This screen displays the subsystems that are checked by BIT. As the subsystems are checked, the dashed lines will change to a subsystem status (OK, DEGRADED, OUT, - -). The - - appears on the MVS status line when the PDFCS could not be connected to the MVS. This screen also identifies the system software version.

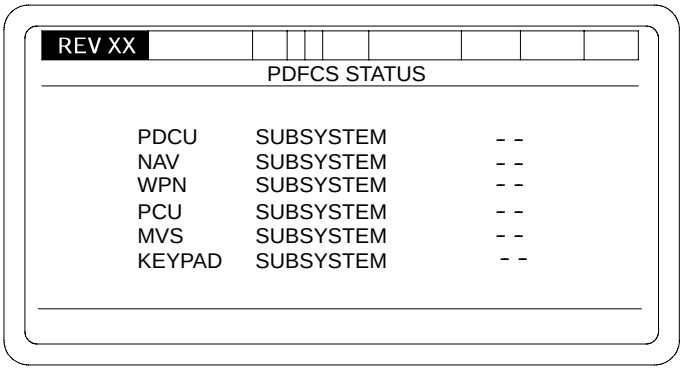


06pc071ma

In the event of a failure during POWER UP STATUS, the message, DEGRADED-ACK TO CONTINUE, will be displayed on the bottom line of the display. To continue, depress soft key under ACK. After the self-test is complete, SELECT OPERATIONAL MODE menu is displayed.

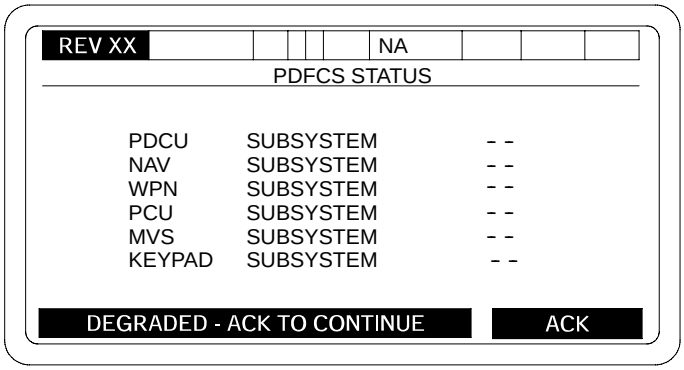


06pc074ma

**NOTE**

If PCU-2 contains an incorrect configuration, the PDFCS will not allow the operator to select normal operations until a correct PDU software configuration is downloaded.

## 2-15B PDFCS INITIALIZATION - CONTINUED

### 2-15B.3 Initialization After an Orderly Shutdown - Continued

When configuration verification checking indicates that an invalid howitzer software configuration is present, a short error message “INVALID SOFTWARE CONFIGURATION” “ACK” will appear on the soft key label line of the PDU.

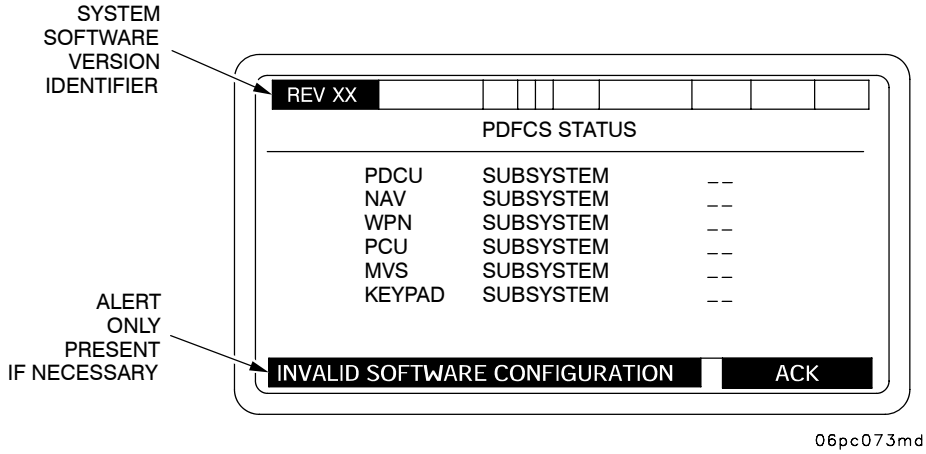


*Discuss Boresight entry requirements during initial POWER-UP and PDU FAULT LAMPS

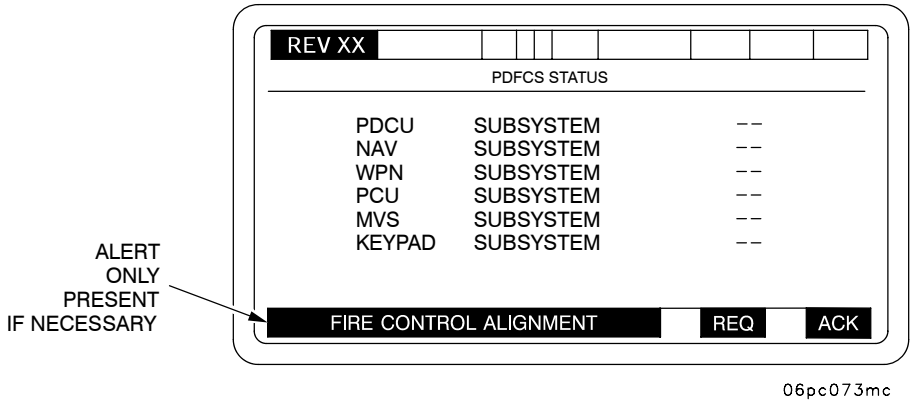


When the message is acknowledged, the PDFCS will proceed to the “SELECT OPERATIONAL MODE” menu. To view detailed software configuration information for each LRU, MAINTENANCE should be selected, IAW procedure in para 3-5.1.

(6) Operational Mode Selection Menu.

This menu allows selection of the primary operating mode for the PDFCS.

The selection structure shows the prompting for Embedded Training selection. Note that the TRAINING selection and the associated prompting will not be available if the Embedded Training Controller fails power-up BIT.

## 2-15B PDFCS INITIALIZATION - CONTINUED

### 2-15B.3 Initialization After an Orderly Shutdown - Continued

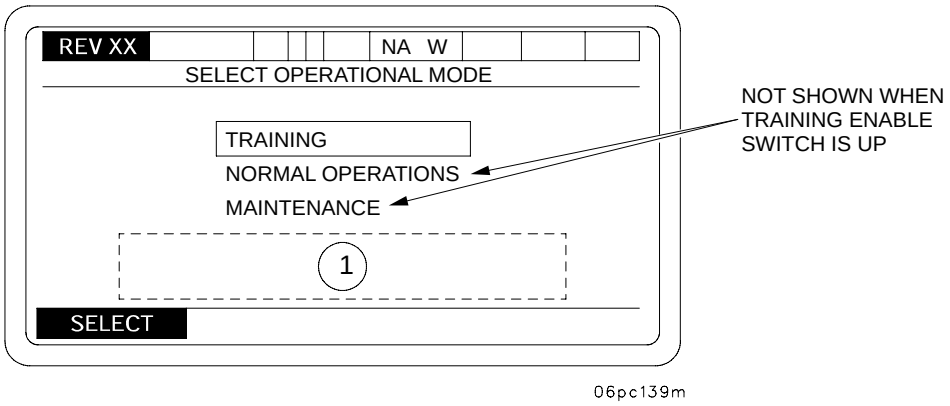


1 - WHEN TRAINING SWITCH IS UP:

**POSITION TRAINING ENABLE SWITCH DOWN**

**TO SELECT OTHER MODES**

- WHEN TRAINING SWITCH IS DOWN:

**POSITION TRAINING ENABLE SWITCH UP**

**TO SELECT TRAINING MODE**

b. Initialization. Select NORMAL OPERATIONS on the SELECT OPERATIONAL MODE menu and press SELECT soft key. A NET ACCESS menu will be displayed.

(1) NET ACCESS - Check data on the NET ACCESS menu for correctness against current data from POC/BCS and press USE ALL. This will cause a NET ADDRESS menu to be displayed.

Using the NET ACCESS menu, check that data in the displayed menu shows same data that the unit SOP specifies.

**NOTE**

To ensure efficient set up of the digital net, it is very important that NET ACCESS and NET ADDRESS data be assigned and controlled by POC/BCS. Verify data per local SOP.

(2) NET TYPE - To select the correct NET TYPE for NETWORK PROTOCOL see Table 2-2 for PDFCS NETWORK PROTOCOL entries 1 to 21, and Table 2-3 for 188-220A PROTOCOL entries 22 to 52.

# 2-15B PDFCS INITIALIZATION - CONTINUED

## 2-15B.3 Initialization After an Orderly Shutdown - Continued

When NETWORK PROTOCOL is PDFCS, the menu below will be displayed.

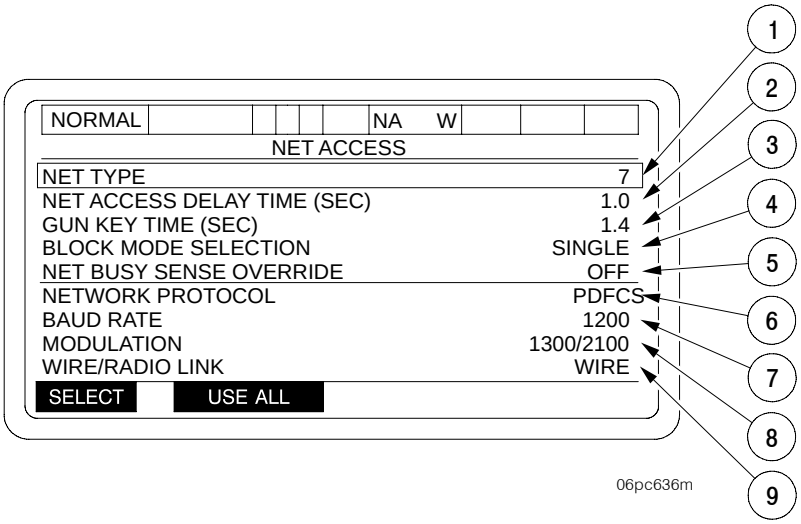


Entries for the NET ACCESS menu are listed below.

1. ENTER NET TYPE. NUMERIC FIELD, RANGE 1. . 52 (Defined in para 2-15B.3(b)).
2. NUMERIC FIELD, RANGE .5 TO 49.5 SECONDS (See para 2-15B.3(a)).
3. WHEN SELECTED GUN KEY TIME MENU WILL BE DISPLAYED
4. (SINGLE, DOUBLE) ENTRY
5. (OFF, ON) ENTRY
6. PDFCS OR 188-220A BASED ON NET TYPE. NOT SELECTABLE
7. (300, 600, 1200, 2400, 4800, 8000, 16000, 32000) BASED ON NET TYPE. NOT SELECTABLE
8. (NRZ, CDP, 1200/2400, 1300/2100, 1575/2425) BASED ON NET TYPE. NOT SELECTABLE
9. (WIRE RADIO, RADIO/KY-57) BASED ON NET TYPE. NOT SELECTABLE
   WHEN NET TYPE OR NET ACCESS DELAY TIME IS SELECTED (See para 2-15B.3(a) and (b)).

USE ALL - The NET ADDRESS (PDFCS) menu will be displayed if NETWORK PROTOCAL is PDFCS

- The NET ADDRESS menu will be displayed if NETWORK PROTOCAL is 188-220A

(a) When NET ACCESS DELAY TIME (SEC) SELECTED, LINE is overwritten with, “TYPE TIME: .5 TO 49.5 SEC” - PRESS ENT -

(b) When NET TYPE SELECTED, LINE is overwritten with “TYPE NET TYPE: Entries from Tables 2-2 and 2-3” - PRESS ENT -

# 2-15B PDFCS INITIALIZATION - CONTINUED

## 2-15B.3 Initialization After an Orderly Shutdown - Continued

When NETWORK PROTOCOL is 188-220A, NET ADDRESS menu will be displayed.

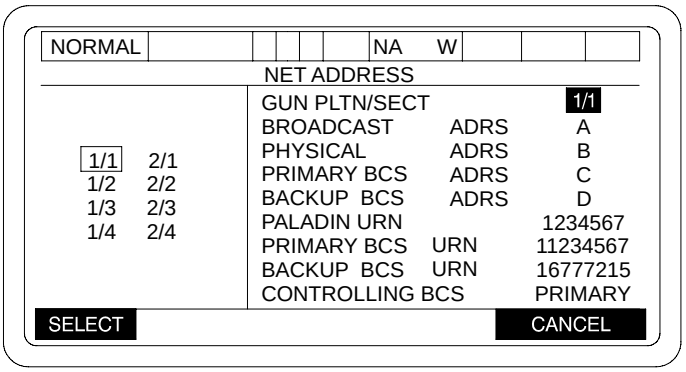


06pc627ma

(2) NET ADDRESS - Check data on the NET ADDRESS menu for correctness against current data from POC and press USE ALL if data is correct. If data is not correct see para 2-15B.2c. A SETUP AND INFORMATION menu will be displayed.

(3) SET DATE/TIME - Select SET DATE/TIME on SETUP AND INFORMATION menu and press SELECT to display a SET DATE/TIME GROUP menu.

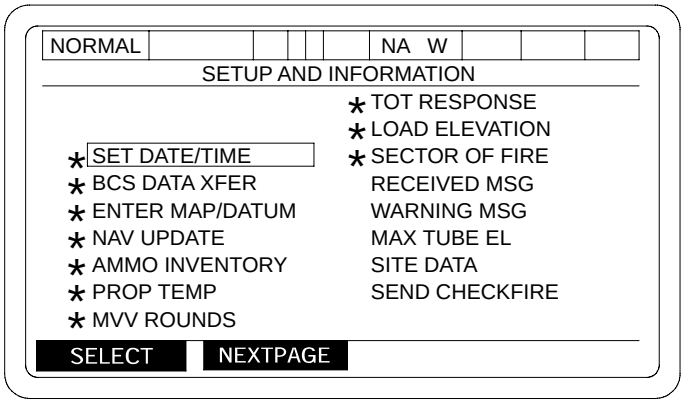


06pc141m

# 2-15B PDFCS INITIALIZATION - CONTINUED

## 2-15B.3 Initialization After an Orderly Shutdown - Continued

**NOTE**

Use according to unit SOP.

If GPS data is available select “USE GPS”.

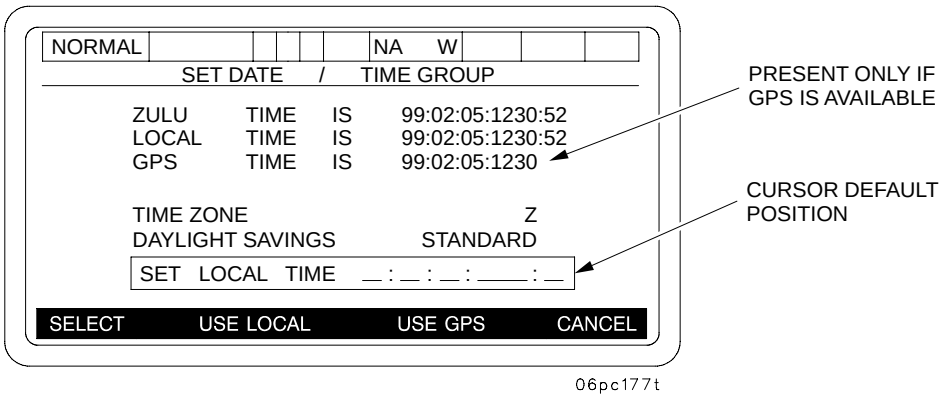


**NOTE**

If GPS is not available or if POC has instructed you not to use GPS time, type in new DTG.

SELECT TIME ZONE - Enter SELECT TIME ZONE in accordance with unit SOP.

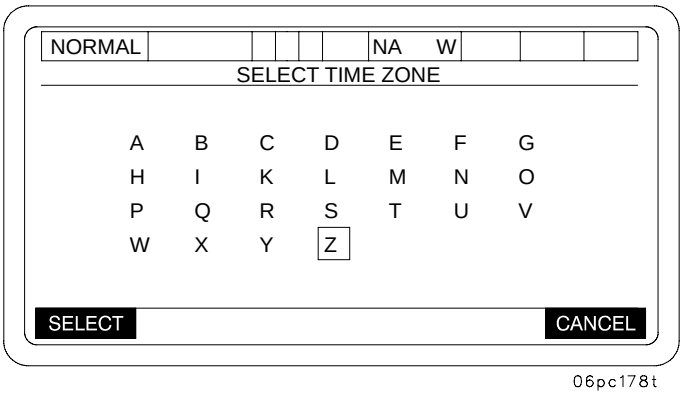


SELECT DAYLIGHT SAVINGS - Enter DAYLIGHT SAVINGS TIME in accordance with unit SOP.

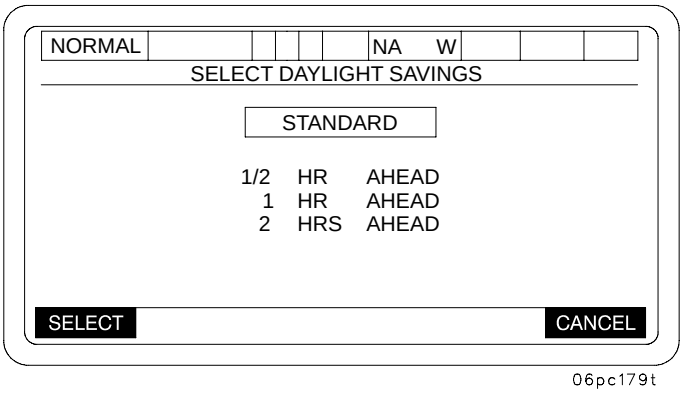

## 2-15B PDFCS INITIALIZATION - CONTINUED

### 2-15B.3 Initialization After an Orderly Shutdown - Continued

Contact the POC by voice radio to obtain the correct date/time data and a MARK. Type in date/time data (year, month, day, hour, minute) as given by the POC. If the data is entered incorrectly a message will be displayed stating “Invalid DTG Value,” and you will have to re-enter the data. When this is done, another SET DATE/TIME GROUP menu will be displayed.

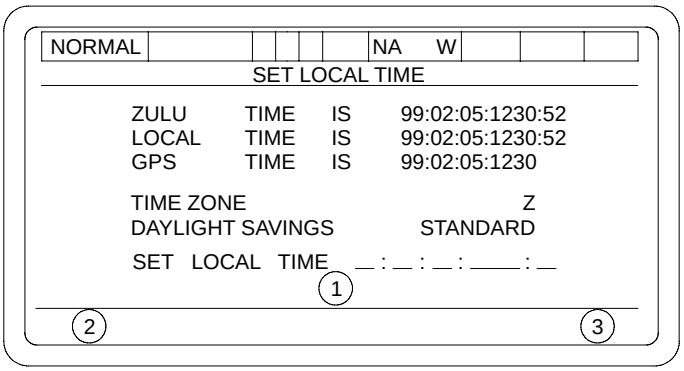


06pc180ta

When the BCS operator gives a countdown and announces MARK, press MARK. The PDFCS and BCS time should now be synchronized. A SETUP AND INFORMATION menu is then displayed on the DU.

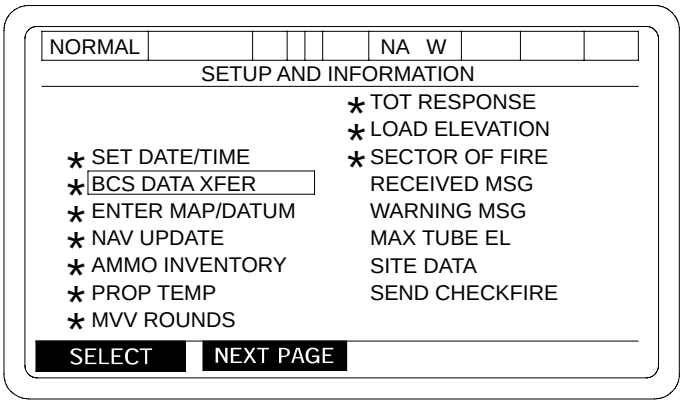


06pc141ma

**NOTE**

The BCS DATA TRANSFER must be done each time you initialize the PDFCS, if the POC/BCS is operational.

(4) BCS DATA TRANSFER - To obtain current initialization data (current MET, registration data, etc.), select BCS DATA XFER on SETUP AND INFORMATION menu. Press SELECT soft key to display a BCS DATA TRANSFER menu.

## 2-15B PDFCS INITIALIZATION - CONTINUED

### 2-15B.3 Initialization After an Orderly Shutdown - Continued

The INITIALIZATION menu item will be automatically boxed and the operator will be prompted to press “YES” or “NO”. Pressing “YES” will cause a message to be sent to BCS requesting initialization data. If you know that BCS is not operational, pressing “NO” will clear the * from BCS DATA XFER on the SETUP AND INFORMATION menu.

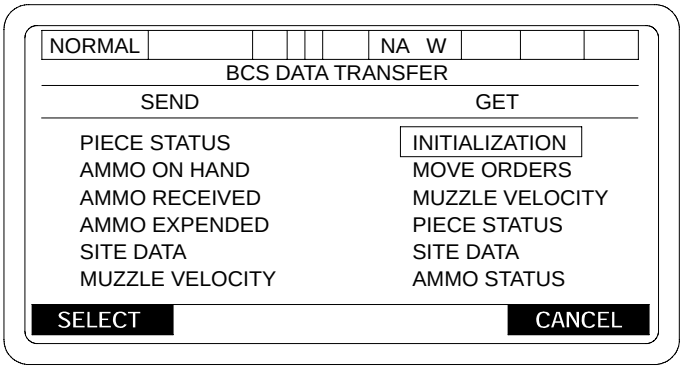


06pc143m

(5) ENTER MAP/DATUM - The BCS DATA XFER, INITIALIZATION data includes a MAP MOD and SPHEROID, but does not transfer the necessary map DATUM. To input the correct DATUM, box in the “ENTER MAP/DATUM” and press the SELECT key. This brings up the MAP/DATUM entry menu.

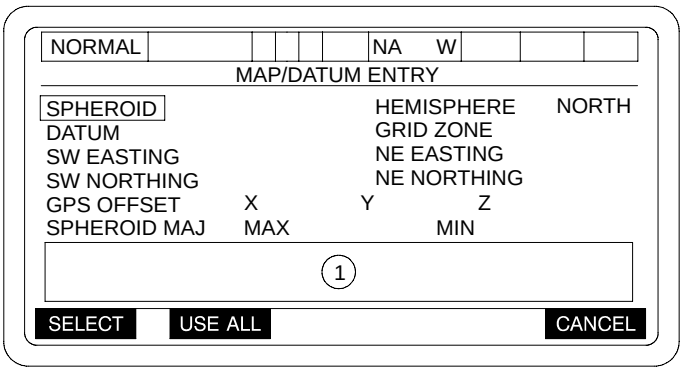


06pc181ta

Check to see that all the data is correct. If it is correct, press the USE ALL key, and proceed with the initialization. If an entry is not correct, select that field and make corrections.

When SPHEROID is selected:

SPHEROID selected will define DATUMs available.
Type 1-5, 8-14:
Press ENT key.

When SW EASTING is selected:

EASTING value of SW Corner of Howitzer Operational Area.
Type 0 to 999999:
Press ENT key.

## 2-15B PDFCS INITIALIZATION - CONTINUED

### 2-15B.3 Initialization After an Orderly Shutdown - Continued

When SW NORTHING is selected:

NORTHING value of SW Corner of Howitzer Operational Area.
Type 0 to 11000000:
Press ENT key.

When HEMISPHERE is selected:

Select NORTH for above the Equator, SOUTH for below.
CHANGE HEMISPHERE YES NO
Press YES or NO key.

When GRID ZONE is selected:

UTM GRID ZONE of Howitzer Operational Area.
Type 0 to 60:
Press ENT key.

When NE EASTING is selected:

EASTING value of NE Corner of Howitzer Operational Area.
Type 0 to 999999:
Press ENT key.

When NE NORTHING is selected:

NORTHING value of NE Corner of Howitzer Operational Area.
Type 1 to 11000000:
Press ENT key.

When DATUM is selected, SELECT DATUM menu is displayed:

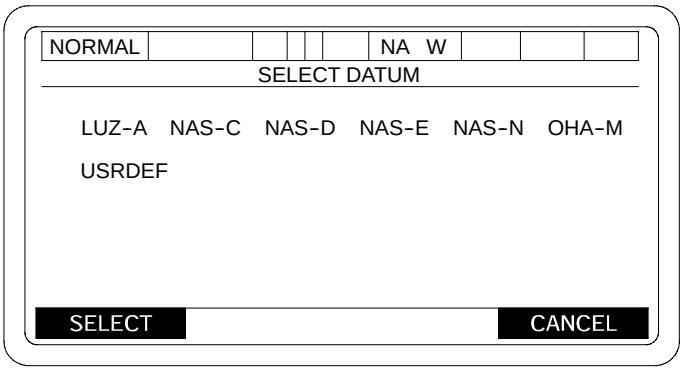


06pc112m

Box in the correct DATUM and press the SELECT key. The DATUMs available are dependent on the SPHEROID selected. See Table Appendix J PDFCS/BCS DATUM AND SPHEROID for SPHEROID/DATUM combinations.

## 2-15B PDFCS INITIALIZATION - CONTINUED

### 2-15B.3 Initialization After an Orderly Shutdown - Continued

**NOTE**

The reference frame for UTM position coordinates is a DATUM. Typically, a Local DATUM is defined by an ellipisoidal earth model (SPHEROID) and a starting point (origin) for the coordinate system. Coordinates on a map or in a Trig list (SCPs) often are on a Local DATUM. An example of a Local DATUM is the North American 1927 (NAD 27) DATUM used in the United States. There have been many different Local DATUMs developed. GPS computes position on the World Geodetic System 1984 (WGS 84), a worldwide coordinate system. To use GPS with coordinates on a Local DATUM, the coordinates must be mathematically shifted. The PDFCS (DRUH and PLGR) can automatically perform DATUM shifting, but first the operator must select the Local DATUM to be used, or provide the appropriate shift parameters. For PDFCS operation, Local DATUMs are represented by two sets of parameters: The Local Ellipsoid (SPHEROID) and shift parameters as defined for each Local DATUM (DATUM IDs). The BCS can provide the SPHEROID via the MAP MOD. But the BCS can not provide the Local DATUM. Therefore the operator must enter it. The SPHEROID selected will determine which DATUM IDs will be available for selection. The PDFCS/BCS SPHEROID and DATUM TABLE provides the SPHEROID number for the PDFCS and BCS, which DATUM IDs that are available for that SPHEROID number and the normal coverage area. Note that there may be more than one DATUM ID associated with a Local DATUM because the shifts vary by locality. For other DATUMs or areas outside the indicated coverage area, User Defined (USDDEF) Datum shifts may be entered manually. The table is not intended as an absolute. A map sheet will identify the DATUM name, Ellipsoid (SPHEROID) name and the coordinate type, or the map sheet will identify the area. The data from a Trig list should identify the same information. These parameters must be correlated to the DATUM ID. If the applicable DATUM ID hasn't been programmed in the PDFCS, shift parameters for many other DATUMs and regions have been published in DMA TR 8350.2 and may be entered thru the GPS X, Y and Z offsets. Note that the PDFCS can not accept shift parameters for all Datums because its SPHEROID capability is limited to those listed in the PDFCS.BCS Table (Appx J).

## 2-15B PDFCS INITIALIZATION - CONTINUED

### 2-15B.3 Initialization After an Orderly Shutdown - Continued

If the DATUM USR DEF is selected, then the GPS X, Y and Z offsets must be entered. These values must be obtained from the POC and should only be used with guidance from Battery Commander. The ENTER USER DATUM PARAMETERS page should look like:

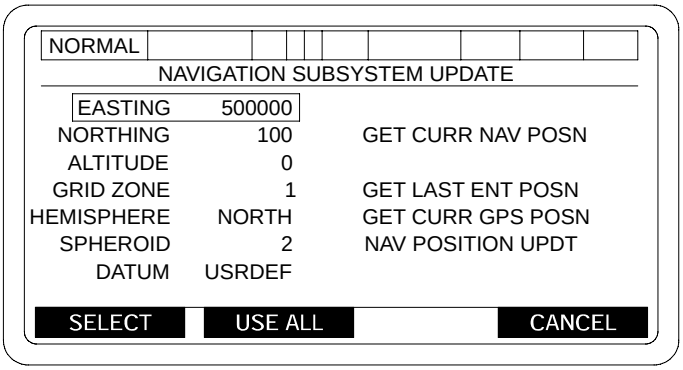


06pc144m

When GPS OFFSET is selected:

Type -2000.0 TO +2000.0:
Press ENT key.

When GPS OFFSET Y is selected:

Type -2000.0 TO +2000.0:
Press ENT key.

When GPS OFFSET Z is selected:

Type -2000.0 TO +2000.0:
Press ENT key.

After all the correct data has been entered, press the USE ALL key to clear and return to the main menu.

(6) NAVIGATION UPDATE - Select NAV UPDATE and press SELECT soft key to display a NAVIGATION SUBSYSTEM UPDATE menu.

**NOTE**

- If vehicle has not been moved since orderly shutdown, the Navigation Subsystem will initiate a Stored Heading Align, which will be completed in about 90 seconds.
- If vehicle has been moved since orderly shutdown, move vehicle to a survey point and enter survey data.

# 2-15B PDFCS INITIALIZATION - CONTINUED

## 2-15B.3 Initialization After an Orderly Shutdown - Continued

Check data for correctness. If correct, press USE ALL soft key. The prompt, NAV POSITION UPDATE TO START, ARE YOU SURE (YES OR NO), will be displayed. Make proper selection. Press the YES key to RESTART the Navigation Subsystem and display the SETUP AND INFORMATION menu.

Press the NO key to redisplay Navigation Subsystem Update menu. Make corrections or press CANCEL to display SET UP AND INFORMATION menu.

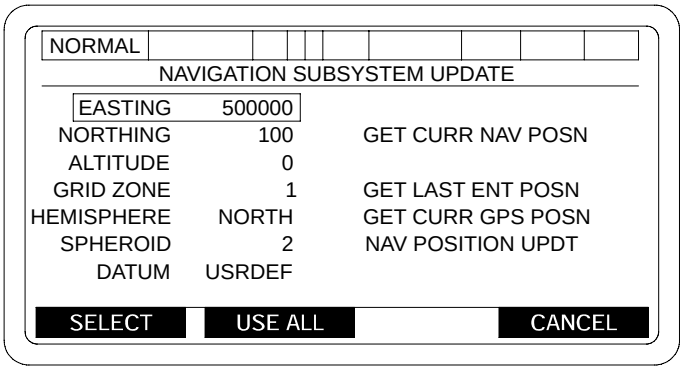


06pc144m

(7) AMMO INVENTORY - Select AMMO INVENTORY on the SETUP AND INFORMATION menu. Press SELECT soft key to display INVENTORY MANAGEMENT menu.

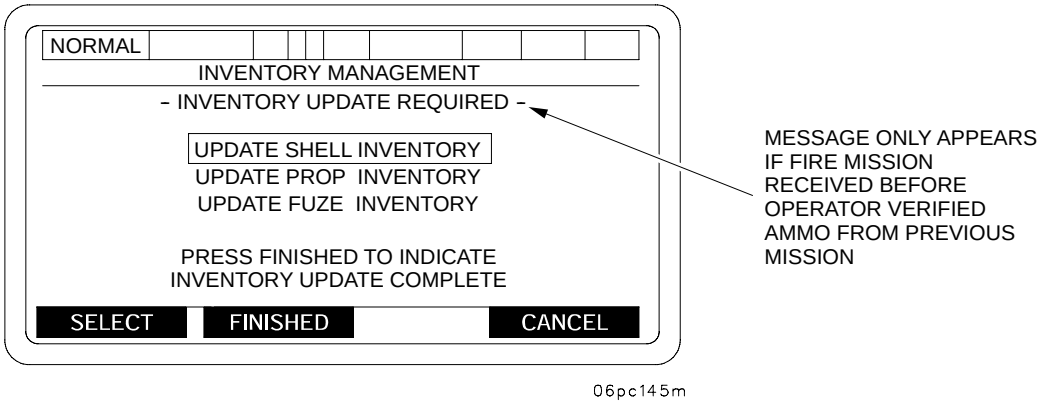


06pc145m

**NOTE**

If a fire mission is activated while in any of the ammunition inventory sub-menus, all valid complete entries shall be saved.

If the ammunition inventory is current, press FINISHED soft key to display the SETUP AND INFORMATION menu. If ammunition inventory is not current, to enter ammunition data, refer to para 2-15B.2.

## 2-15B PDFCS INITIALIZATION - CONTINUED

### 2-15B.3 Initialization After an Orderly Shutdown - Continued

(8) PROPELLANT TEMPERATURE - Select PROP TEMP on SETUP AND INFORMATION menu. Press SELECT key to display a PROPELLANT TEMPERATURE menu.

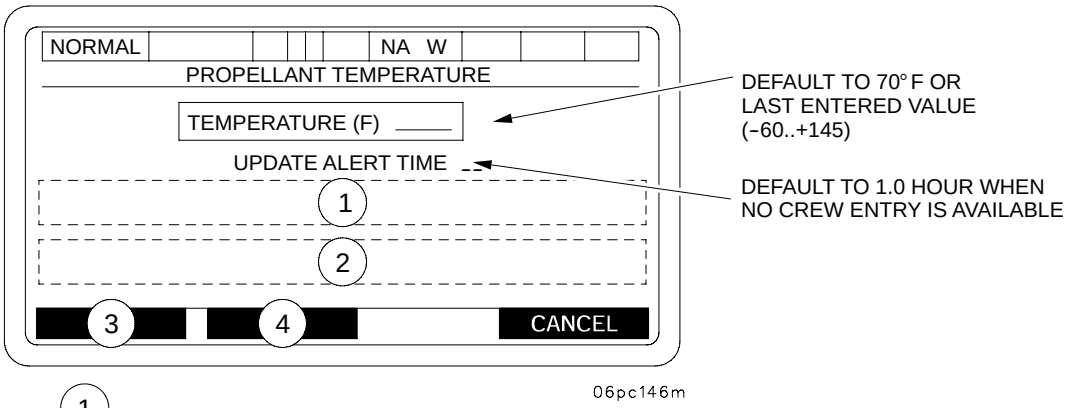


06pc146m

1 TIME TO GO XX:XX (HOURS:MINUTES) OR TIME EXCEEDED

2 WHEN TEMPERATURE SELECTED
TYPE TEMPERATURE IN FAHRENHEIT
DEGREES -60 TO +145
- PRESS ENT KEY -

WHEN UPDATE ALERT TIME SELECTED
TYPE UPDATE TIME IN 0.5 HOUR
INCREMENTS 0.5 TO 2.0
- PRESS ENT KEY -

3 BLANK - WHEN TEMPERATURE OR UPDATE ALERT TIME SELECTED
SELECT - WHEN ITEM IS NOT SELECTED

4 USE ALL - WHEN NO ITEM IS SELECTED
+/- WHEN TEMPERATURE IS SELECTED
BLANK - WHEN UPDATE ALERT TIME IS SELECTED

(9) MUZZLE VELOCITY VARIANCE (MVV) - To set the MINIMUM number of rounds that will be used in calculating muzzle velocity variances, select the MVV ROUNDS from the SETUP AND INFORMATION screen.

NOTE: 1. The entry field will display the current MVV rounds selected and will default to 4 on systems initialization.
2. To use the MVV, you must have an extended lot code in the PDFCS inventory.

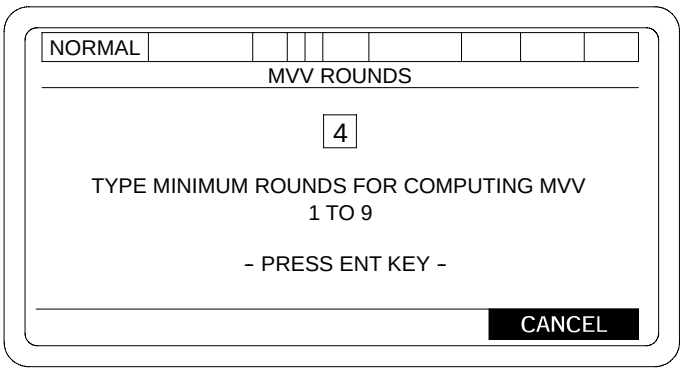


06pc610m

# 2-15B PDFCS INITIALIZATION - CONTINUED

## 2-15B.3 Initialization After an Orderly Shutdown - Continued

If displayed temperature and update alert time are correct, press USE ALL key. If another temperature or alert time entry is necessary, box the desired item and press SELECT key. Type in new temperature or alert time and press ENT key. When entries are correct, press USE ALL key. The SETUP AND INFORMATION menu will be displayed.

(10) TOT RESPONSE - To access the TOT RESPONSE menu, press NEXT PAGE key to display next page of SETUP AND INFORMATION menu.

Select TOT RESPONSE and press SELECT to display a TOT RESPONSE menu.

Type in desired time to be used and press ENT key. The SETUP AND INFORMATION menu will be displayed.

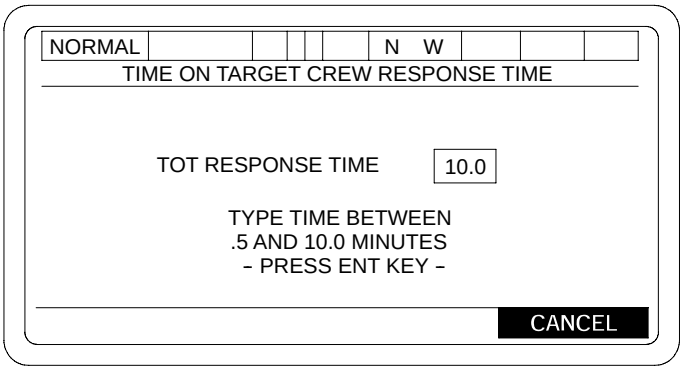


06pc135m

(11) Select LOAD ELEVATION on the SETUP AND INFORMATION menu. Press SELECT key to display a TUBE LOAD ELEVATION menu.

**CAUTION**

Do not enter an elevation greater than 300 mils. Settings above 300 mils may result in breech failing to close and could cause unnecessary wear on spring pack.

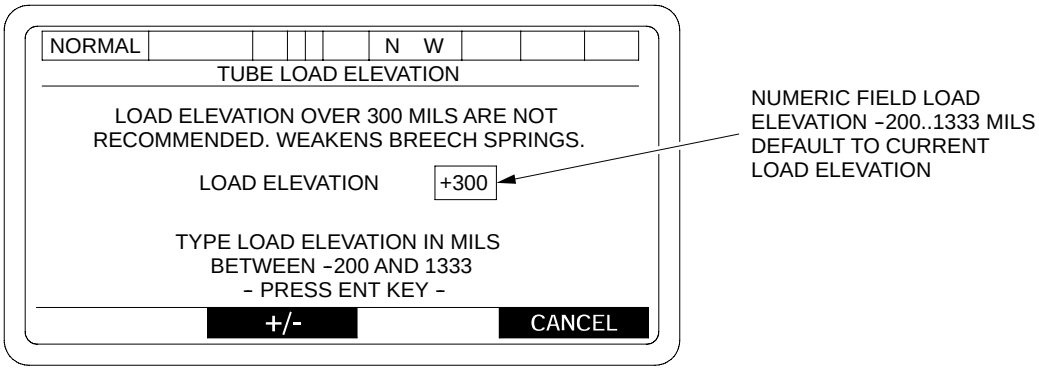


hipc4047

If load elevation shown is the desired elevation, press ENT key. If a new elevation is desired, type in desired elevation and then press ENT key. The SETUP AND INFORMATION menu will be displayed.

## 2-15B PDFCS INITIALIZATION - CONTINUED

### 2-15B.3 Initialization After an Orderly Shutdown - Continued

(12) Select SECTOR OF FIRE on SETUP AND INFORMATION menu. Press SELECT soft key to display a DEFINE SECTOR OF FIRE menu.

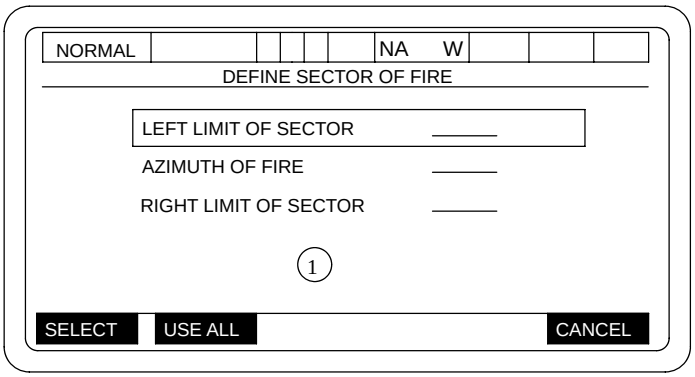


06pc205tb

If data displayed on menu is desired sector of fire, press USE ALL soft key. If a change is needed, select area to be changed, type in change and press ENT key. Repeat for additional changes, when complete press USE ALL soft key. A POS UPDATE or NAV RESTART must be performed if the changes are to be used by the PDFCS.

(13) SECTION IN ORDER - When navigation alignment time has been completed, or message OK TO MOVE OR SHOOT ACK has been acknowledged, a CANCEL prompt will appear on the SETUP AND INFORMATION menu. Press CANCEL to display the SECTION IN ORDER AT INITIALIZATION POINT screen.

The PDFCS system is now initialized and can perform missions as directed.

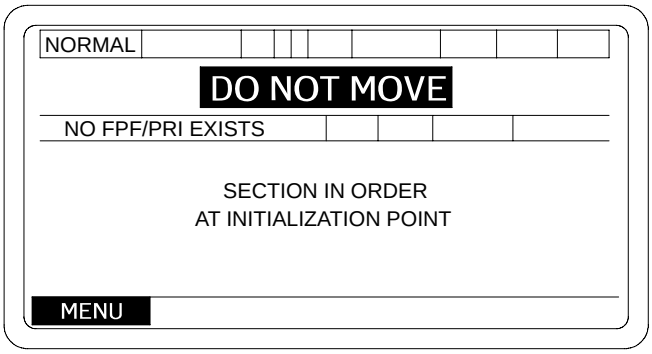


06pc148m

## 2-15B PDFCS INITIALIZATION - CONTINUED

### 2-15B.4 Initialization After a Catastrophic Failure.

a. If a catastrophic failure (e.g., sudden loss of power of PCU-2) occurs, it is possible that no data at all will be saved by the PDFCS. In this case, a step-by-step-system initialization must be done.

**NOTE**

- Position data must be recorded prior to pressing ARRIVED key during emplacement. If time permits the crew should also set out collimator or select a DAP and set 3200 Deflection on the PANTEL on Center of Sector (Base Azimuth).
- To be able to react quickly to re-initialize a failed PDFCS, a Platoon SOP voice request procedure from crew to POC to send all required data messages from BCS may be helpful. Data that would be useful from BCS are: INITIALIZATION (Subscriber File, Map Mode, MET, Registration), MUZZLE VELOCITY, Current Position (to include Sector of Fire) and Propellant Temp (PIECE STATUS), SITE STATUS, and AMMO STATUS.

b. Getting Data. To return to Section in Order as fast as possible after a catastrophic failure of the PDFCS, return the tube to travel lock before shutting PDFCS power off. Wait about 5 seconds, then turn PDFCS power on. Begin the Initialization process as normal, working off the * menu items on the SETUP AND INFORMATION menus. If BCS has current data, get as much data as you can from BCS. This data can be obtained as follows:

(1) Box BCS DATA XFER on the SETUP AND INFORMATION menu and press SELECT key. The INITIALIZATION item under the GET column will be boxed as usual. Press YES to transmit the request for INITIALIZATION data (Subscriber File, Map Mode, MET and Registration).

(2) Next, box MUZZLE VELOCITY under the GET column and press SELECT key. Press YES key to transmit the request to BCS.

**NOTE**

The PDFCS automatically uses the Muzzle Velocity data sent by BCS. No further action is necessary by the crew.

(3) Repeat the last step for PIECE STATUS, SITE STATUS, and AMMO STATUS.

(4) Once all requests have been sent, press CANCEL key to move to the next initialization step on the SETUP AND INFORMATION menu.

## 2-15B PDFCS INITIALIZATION - CONTINUED

### 2-15B.4 Initialization After a Catastrophic Failure - Continued

c. Nav Update.

(1) Use your current position data that you recorded upon emplacement.

(2) If POC has a current location where the failure occurred, use that data for navigation initialization. To use position data obtained from BCS in the step above, box NAV UPDATE on the SETUP AND INFORMATION menu, press SELECT key and a NAV SUBSYSTEM UPDATE menu will be displayed. Box GET BCS PRPT POSN and press SELECT key. Press USE ALL key, and PDFCS will use the BCS reported position data and return to the SETUP AND INFORMATION menu.

(3) Another howitzer with an operational DRUH and PDFCS can pull into failed howitzer's position (left hub to left hub) and provide navigation data to be entered on the keyboard.

**NOTE**

If no BCS-provided Move Order is expected after PDFCS initialization, then the Sectors of Fire must be changed to those provided by the BCS prior to the failure. Sector of Fire entries must be completed prior to inputing a manual Move Order.

(4) The failed howitzer can be taken to a surveyed point and navigation initialized from survey data.

d. Ammo Inventory. To use ammunition inventory data obtained from BCS in the step above, box AMMO INVENTORY on the SETUP AND INFORMATION menu, press SELECT key and INVENTORY MANAGEMENT menu will be displayed. Box EDIT BCS PROVIDED and press SELECT key. When the FINISHED key is pressed the ammunition inventory shall be reviewed to insure each group of projectiles has at least one propellant and each group of propellants has at least one projectile. If a projectile is found without a propellant or a propellant without a projectile, PDFCS will display PROJECTILE/PROPELLANT MISMATCH menu. Pressing the CONTINUE Softkey on this menu will return operator to the INVENTORY MANAGEMENT menu, at which time the operator has to update SHELL/PROP inventory. On the next INVENTORY MANAGEMENT menu, press FINISHED to accept the BCS PROVIDED data. If you want to check the ammo inventory for accuracy, then box and select UPDATE SHELL, UPDATE PROP, and UPDATE FUZE one at a time (para 2-15B.2d(4) (e) (5)).

e. Site Definition. To use Site data obtained from BCS in the step above, box SITE DATA on the SETUP AND INFORMATION menu, press SELECT key and SITE DEFINITION menu will be displayed. Box GET BCS SITE and press SELECT key (This option will only be available if the POC has sent an AFU mask to the PDFCS). Press USE ALL, and the BCS provided Site Data will be used by the PDFCS.

## 2-15C PDFCS TRAVEL MODE.

During the travel mode the navigation system provides a continuous position data display to the operator. The data displayed on the EL Panel will show UTM coordinates for both position and destination. Also included is a graphic display showing where the vehicle is traveling in relation to destination. After alignment, the PDFCS will automatically go into travel mode when the howitzer starts to move.

### 2-15C.1 Movement.

Once the howitzer has been initialized and the navigation system has had time to align, a CANCEL SOFTKEY will appear on the main menu. To view a SECTION IN ORDER AT INITIALIZATION POINT screen, press the CANCEL SOFTKEY

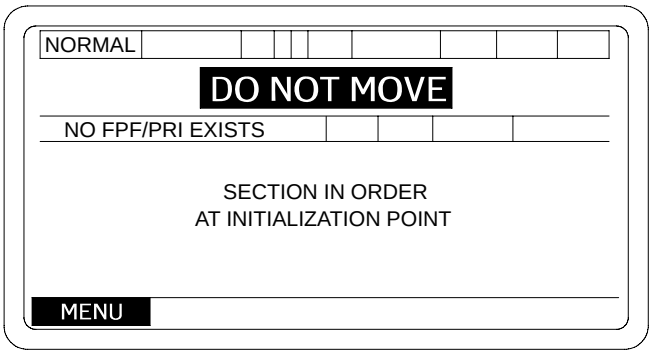


06pc148m

**NOTE**

- DO NOT MOVE the howitzer until you see OK TO MOVE OR SHOOT, ACK message.
- You may then move the howitzer or accept fire missions, but you can expect ZUPT requests during moves if the ALN_ _ _S is still counting down.

2-15C.1.1 Move Order. Upon receipt of a Move Order, an audio alert will sound and an OPERATOR ALERT and a STEERTO/EMPLACEMENT screen will automatically appear if the system display was at a SECTION IN ORDER screen. If the SET UP AND INFORMATION screen is displayed a MOVE ORDER alert will appear in field 3 of the screen, and an OPERATOR ALERT, “MOVE MISSION”, “ACK”, will be displayed and the CANCEL soft key must be pressed to display the STEERTO/EMPLACEMENT screen. Once the vehicle has moved about 25 meters an audible and soft key alert “PRESS ACK WHEN TUBE STOWED, ACK” will be displayed. Acknowledge the tube is stowed and press “ACK” soft key.

# 2-15C PDFCS TRAVEL MODE - CONTINUED

## 2-15C.1 Movement - Continued

STEERTO display screens:

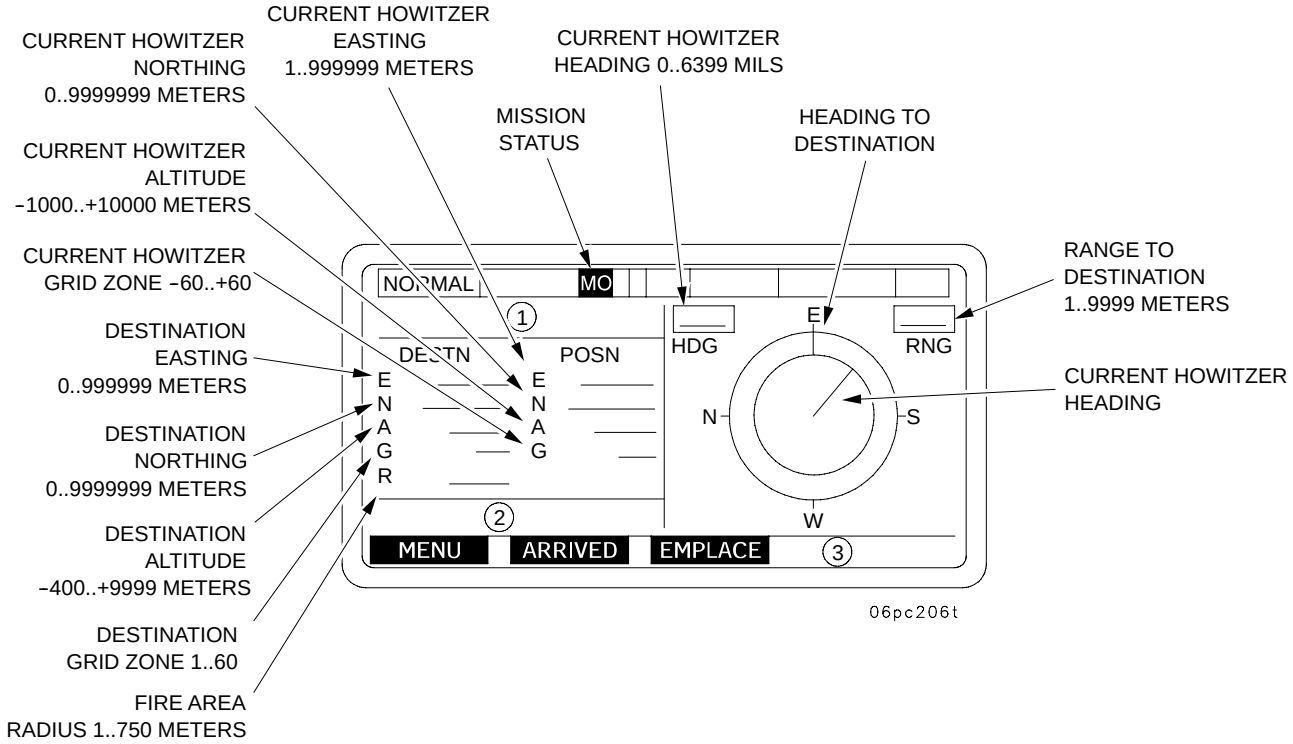


(1) "STEERTO FIRE AREA" - Destination is Fire Area
"STEERTO INIT POINT" - Destination is Initialization point
"STEERTO LOG POINT" - Destination is Logistics Point
"STEERTO FIRE POINT" - Destination is Fire Point

(2) "ORDERED MOVE IN PROGRESS"
"STOP MOVING AND WAIT"
"MOVE IN PROGRESS"
"NO AUTHORITY OR ORDERS TO MOVE"
"AWAITING START OF ORDERED MOVE"
"DO NOT START ORDERED MOVE"

(3) "ZUPT REQUIRED"
"NAV POS UPDATE REQUIRED"

# 2-15C PDFCS TRAVEL MODE - CONTINUED

## 2-15C.1 Movement - Continued

The STEER TO FIRE AREA screen contains the following:

a. MO - Describes Move Order status.

b. DESTN - Indicates destination coordinates: (E) Easting, (N) Northing, (A) Altitude, (G) Grid Zone, (R) Radius of operating area,

c. POSN - Indicates present howitzer position: (E) Easting, (N) Northing, (A) Altitude, (G) Grid Zone.

d. HDG - Howitzer's numerical heading in Mils (Azimuth).

e. RNG - Range to destination in radial distance.

f. Graphic Display - N, E, S, W on outer circle, indicates North, East, South and West and rotates like a compass. The line running from the center of display to edge of the inner circle indicates present vehicle heading. The line between the inner and outer circle indicates the desired heading. When these two lines are aligned, the vehicle is traveling toward destination.

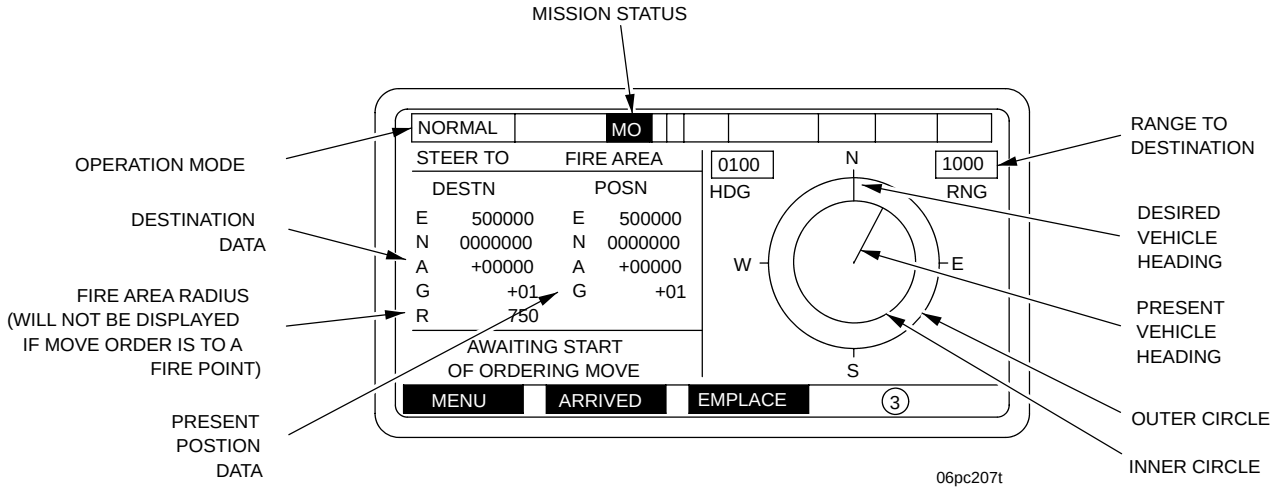

# 2-15C PDFCS TRAVEL MODE - CONTINUED

## 2-15C.1 Movement - Continued

2-15C.1.2 Moving. During movement of the howitzer, the STEER TO FIRE AREA screen will assist the operator in locating his destination. While the howitzer is on the move, the following will occur:

a. The graphic portion of the display will indicate the howitzer's movement by the outer circle of the display moving according to the vehicle heading. The line from center of the display to the inner circle will move as the howitzer changes directions.

b. The alphanumeric portion of the display under POSN will provide the operator with his current position constantly. The display above HDG will change as the howitzer changes headings and the display above RNG will change to indicate whether the movement is away from destination (increase) or toward destination (decrease).

c. Navigation system update may occur (zero velocity update) to maintain location accuracy.

2-15C.1.3 Zero Velocity Updates. "Periodic Zero Velocity Updates (ZUPT) may be required if the VMS fails or is out, and the GPS is not valid. ZUPTs are required to increase the accuracy of the Navigation Subsystem. To insure proper Navigation Subsystem Operation and to maintain system performance accuracies, ALL Requested ZUPTs must be honored." When an update is required, the PDFCS will notify the operator with an audible alert and "ZPT" will appear in Field 6 and a soft key alert "ZUPT REQUIRED", "ACK". To accomplish a ZUPT, perform the following steps:

a. Stop the vehicle as soon as possible after the alert (the less time traveled between each ZUPT, the better the system accuracy).

b. Press ACK key to acknowledge operator alert.

c. Remain stopped until ZUPT is complete. ZUPT is done automatically during this period.

When the ZUPT is complete, another operator alert will be displayed, "ZUPT NO LONGER REQUIRED", "ACK". "ZPT" is no longer displayed in status line. Press ACK key, then vehicle movement can be continued.

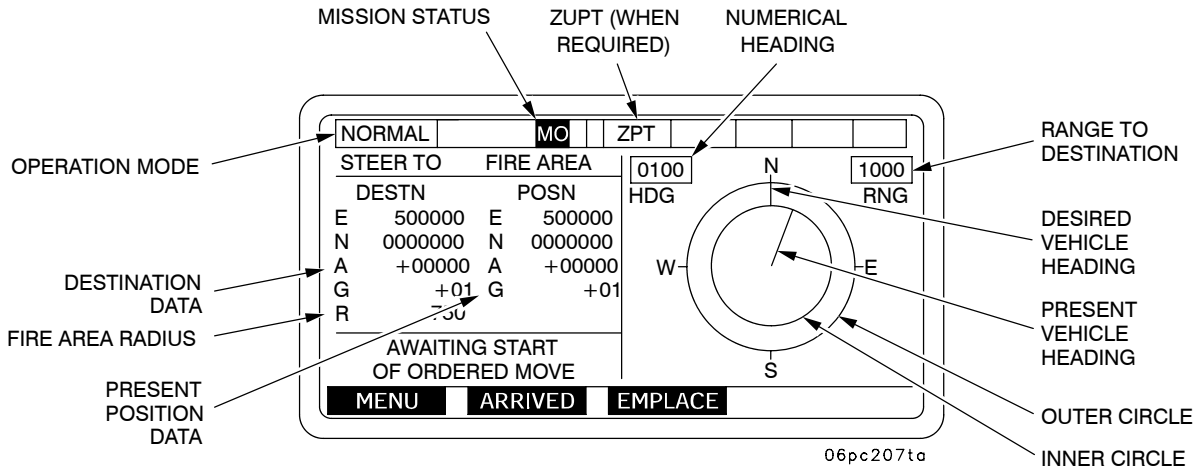

# 2-15C PDFCS TRAVEL MODE - CONTINUED

## 2-15C.1 Movement - Continued

2-15C.1.4 Moving with Navigation System Degraded. If a navigation system failure occurs while the howitzer is moving, the operator will be alerted visually with a NAVIGATE ON YOUR OWN TO DESTINATION display. The chief of section must use established navigation procedures to reach the destination shown. If only the PLGR is operational there will be no HDG information on the display.

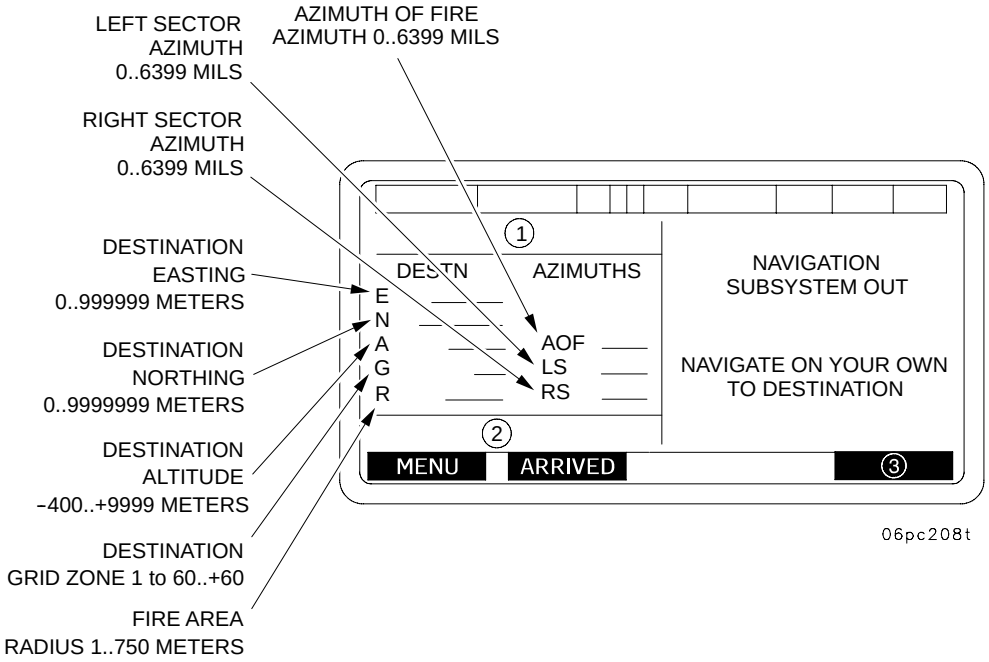


(1) "DEGRADED FIRE AREA" - Destination Is Fire Area

"DEGRADED INIT POINT" - Destination Is Initialization Point

"DEGRADED LOG POINT" - Destination Is Logistics Point

"DEGRADED FIRE POINT" - Destination Is Fire Point

(2) "ORDERED MOVE IN PROGRESS"

"STOP MOVING AND WAIT"

"MOVE IN PROGRESS"

"NO AUTHORITY OR ORDERS TO MOVE"

"AWAITING START OF ORDERED MOVE"

"DO NOT START ORDERED MOVE"

(3) "MOVING" soft key only appears when the Navigation System is DEGRADED. Press "MOVING" soft key after vehicle starts moving. Press "ARRIVED" key when vehicle has arrived at destination.

## 2-15C PDFCS TRAVEL MODE - CONTINUED

### 2-15C.2 Emplacement Fire Point/Fire Area.

When the howitzer enters the radius the PDFCS will display the Emplacement at a FIRING AREA/POINT screen depending on type of MOVE ORDER received.

The EMPLACE FIRE POINT screen is also used for DESTINATION TYPES, INITIALIZATION POINT and LOGISTICS POINT emplacement.

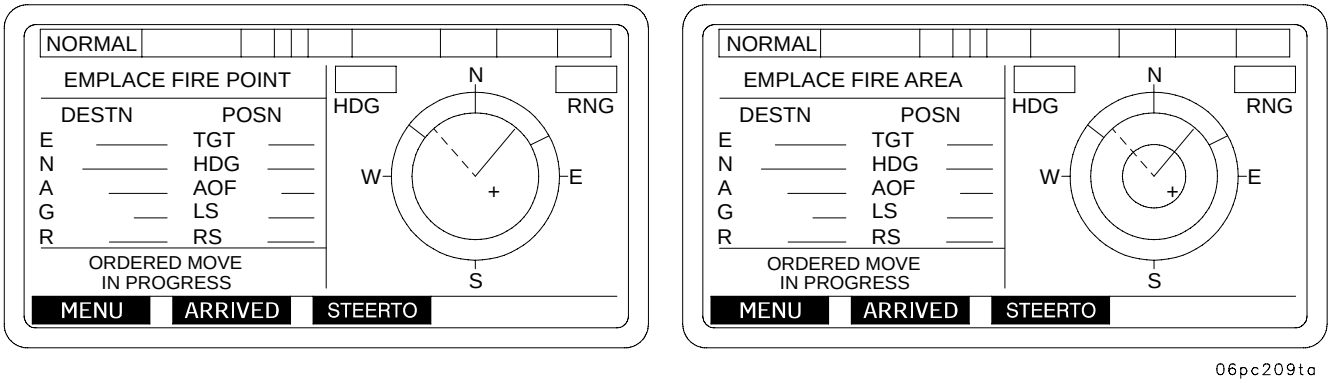


06pc209ta

EMPLACE FIRE AREA Screen - The data on the EMPLACE FIRE AREA screen is the same as the STEER TO FIRE AREA screen with the following exceptions:

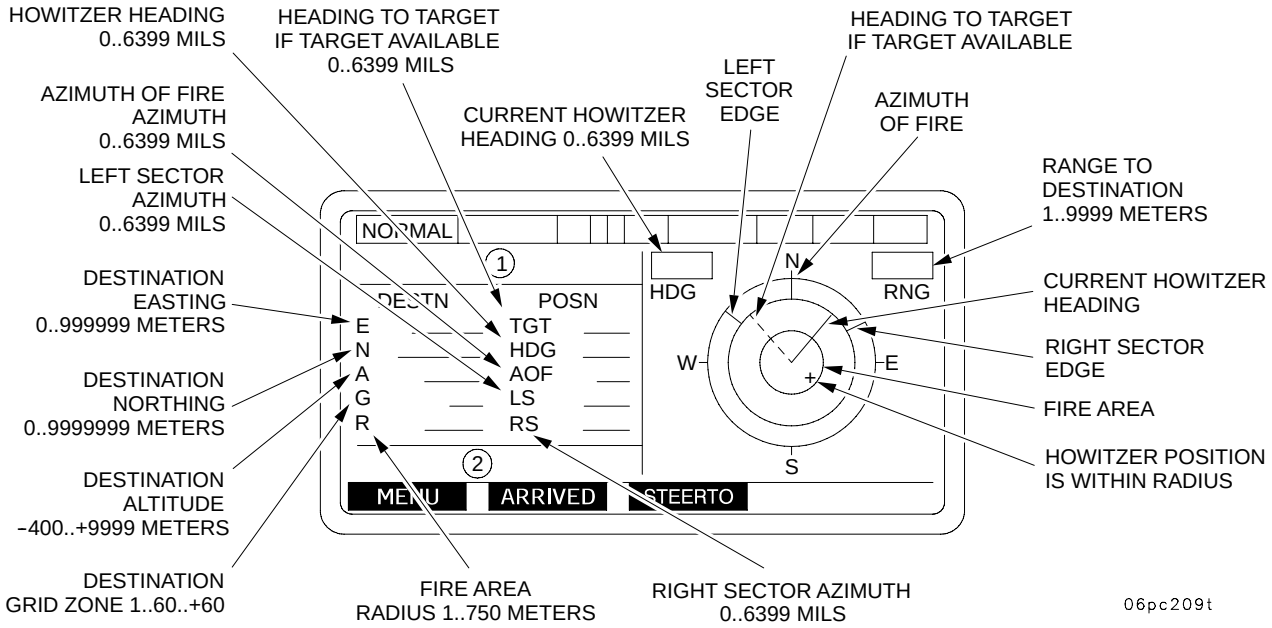


06pc209t

(1) "EMPLACE FIRE AREA" - Destination Is Fire Area

"EMPLACE INIT POINT" - Destination Is Initialization Point

"EMPLACE LOG POINT" - Destination Is Logistics Point

"EMPLACE FIRE POINT" - Destination Is Fire Point

(2) "ORDERED MOVE IN PROGRESS"

"STOP MOVING AND WAIT"

## 2-15C PDFCS TRAVEL MODE - CONTINUED

### 2-15C.2 Emplacement Fire Point/Fire Area - Continued

a. Plus Sign - Represents the vehicle. When the vehicle is within the allowable move area assigned by the Platoon Operation Center (POC), the "+" will appear on the display. As the vehicle moves, the plus sign will also move, indicating direction of travel.

b. Inner Circle - Represents the Allowable Movement Area and will vary in size. This is determined by the radius of the Fire Area and is assigned by POC with a Move Order. This circle is an Emplacement Aid.

**NOTE**

- If EMPLACEMENT screen was accessed prior to arriving at next firing area the EMPLACEMENT screen may not display automatically.
- Once the vehicle is within the inner circle (shown by the + sign) the CHIEF OF SECTION may choose his emplacement position to take advantage of terrain features.

c. The line running from middle circle to outer circle between N and E represents Right Sector of Fire and the line between N and W represents Left Sector of Fire. The line under N represents Azimuth of Fire. The sector of fire is assigned by POC with the Move Order.

d. Solid Line - Represents the current heading. It extends from the center of the smallest circle to the edge of the middle circle. When this line is aligned with the line under the "N," the vehicle is travelling toward the ordered destination.

e. Dotted Line - Represents the gun-target line to a Final Protective Fire (FPF) target (if stored on PDFCS) and is designated by the POC.

f. Destination - Represented by the intersection of the solid line and the dotted line at the center of the smallest circle.

g. Azimuths - Display of azimuths in Mils to TGT (FPF target if one exists), HDG (present howitzer heading), AOF (Azimuth of Fire), LS (Left Sector of Fire), RS (Right Sector of Fire).

## 2-15C PDFCS TRAVEL MODE - CONTINUED

### 2-15C.2 Emplacement Fire Point/Fire Area - Continued

2-15C.2.1 Emplacing. Once the plus sign is within the designated firing area the howitzer has reached its destination. The howitzer is then maneuvered until vehicle heading (solid line from the center of the smallest circle to the edge of the middle circle) is aligned as closely as possible with the Azimuth of Fire Line (center solid line between the middle and outer circle). When these lines are aligned, the howitzer is roughly laid on the Azimuth of LAY.

**NOTE**

- DRUH position data improves approximately 30 seconds after the howitzer is stopped. The chief of section has the option of awaiting this time and then pressing the ARRIVED soft key to achieve optimum positioning data. However, this option should not be considered during an emergency fire mission (EMERGENCY MISSION).
- Before pressing ARRIVED key you must record your position data and Azimuth of Fire (Base Azimuth) in case the PDFCS fails.
- If cab-side VMS modem is disconnected and position data is not available from the PLGR, the DRUH position data will degrade even though the howitzer is not moving. This data may degrade to the point where the navigation subsystem will be declared out.
- The soft key under ARRIVED on the MOVE ORDER screen must be pressed before the gun tube is unstowed from travel lock. This action establishes the TUBE STOW (travel lock) position. Pressing the STOW key will move the tube back to this azimuth.
- If EMPLACEMENT screen was accessed prior to arriving at next firing area the EMPLACEMENT screen may not display automatically.
- Once the vehicle is within the inner circle (shown by the + sign) the CHIEF OF SECTION may choose his emplacement position to take advantage of terrain features.

# 2-15C PDFCS TRAVEL MODE - CONTINUED

## 2-15C.2 Emplacement Fire Point/Fire Area - Continued

- When emplacing the howitzer, the Azimuth of Fire (Azimuth of LAY) from the Move Order is the azimuth the PDFCS holds as the “Base Azimuth” (the 3200 deflection reference position). This is the azimuth used by the PDFCS to compute ballistic data, and is also sent to the BCS in the PIECE STATUS (HOW: UPDATE) message for ballistic computations at the BCS.

- When emplacing at a FIRING POINT the howitzer range must be 50 meters or less. (Optimum 10 meters or less.)

Press the ARRIVED soft key on the EMPLACE FIRE AREA or Fire Point Site Definition screen to display a SITE DEFINITION screen. Take the tube out of travel lock.

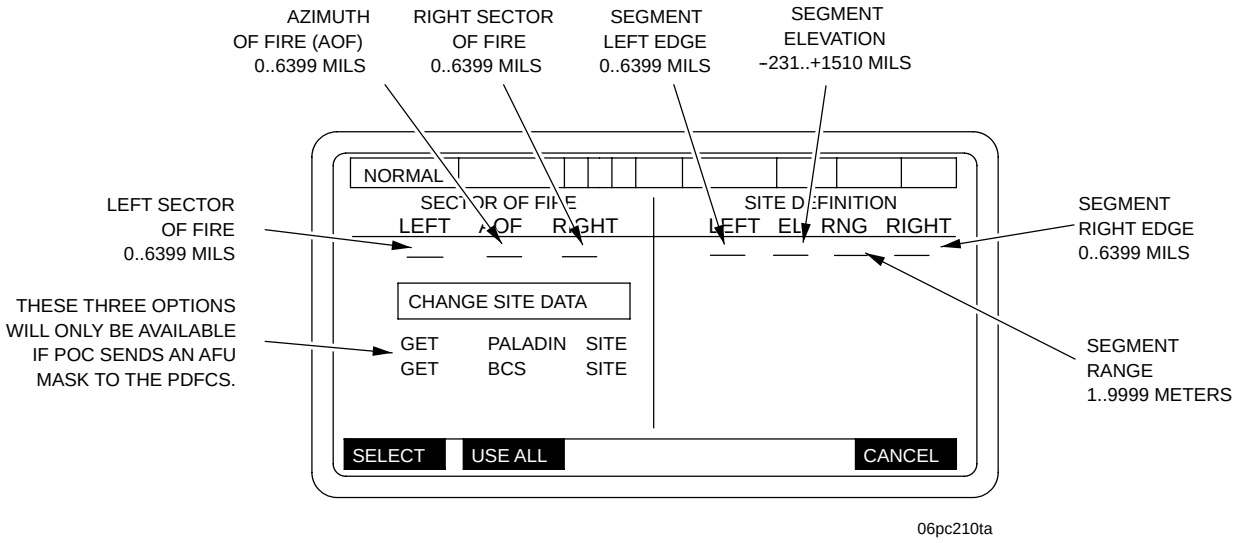


AUTOMATIC SELECTION, “BOXING” will occur starting from field LEFT and then continuing from LEFT to RIGHT, to field EL RNG and RIGHT, after each previous entry has been ENTERED.

# 2-15C PDFCS TRAVEL MODE - CONTINUED

## 2-15C.2 Emplacement Fire Point/Fire Area - Continued

2.15C.2.3 SITE DATA. Identifies left and right limits, range and elevation in mils, and is used to ensure that all rounds clear crests within the howitzer's SECTOR OF FIRE. Up to eight sets of site definition data can be entered. Site definition data is determined using the same procedures as SITE TO CREST (sighting through the cannon tube). This data is entered using the SITE DEFINITION screen as follows:

a. Obtain SECTOR OF FIRE data from POC. Normally Azimuth of Fire, Left and Right Sector limits will be provided by the POC in the Move Order and will be displayed automatically on the SITE DEFINITION menu on the left side of the screen under LEFT AOF RIGHT headings.

b. Press the DELETE key to remove SITE DATA from previous occupation. Box in limit under column to be changed and press the SELECT key.

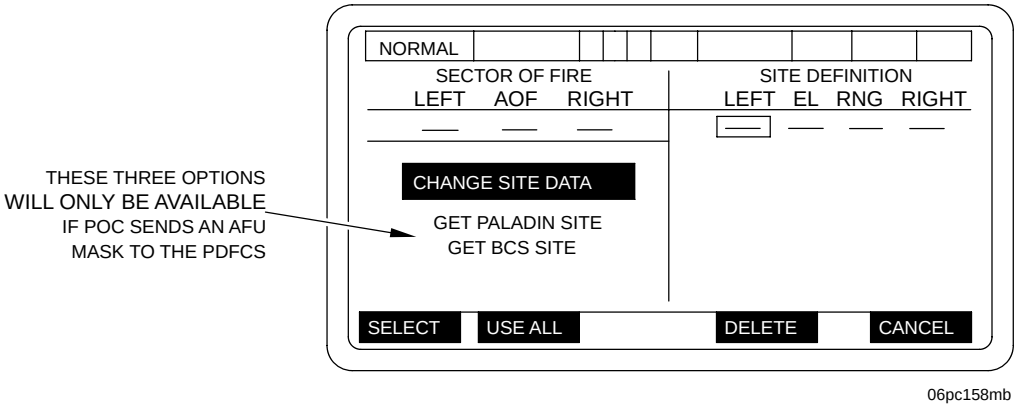


c. One Line SITE DATA (For Initial Occupation). Pressing the ARRIVED key, the COS must obtain One Line SITE DATA. After removing the gun tube from the travel lock, the COS brings the cursor box to the left limit and presses SELECT, then traverses the gun tube to the left while monitoring the Azimuth readout until he reaches at least one mil beyond the Left limit, then presses ENTER. While the GUNNER sights through the gun tube, the COS elevates or depresses the gun tube to obtain immediate crest. COS brings the cursor box to the Right limit and presses SELECT, then COS traverses the gun tube to the Right limit while the GUNNER sights through the gun tube. COS elevates gun tube upon the COMMAND "Elevate" from the GUNNER when the GUNNER needs to clear an obstruction until the COS reaches the Right limit while monitoring the Azimuth readout, then presses ENTER. Before moving the gun tube, COS then cursors to the entry under EL, presses SELECT and ENT to obtain elevation to immediate Crest. COS then cursors to entry under Range, presses SELECT and ENT and inputs RANGE TO CREST from the numeric PDFCS keypad and presses ENT. Upon completion of One Line SITE DATA the COS then presses USE ALL to input MIN QE.

## 2-15C PDFCS TRAVEL MODE - CONTINUED

### 2-15C.2 Emplacement Fire Point/Fire Area - Continued

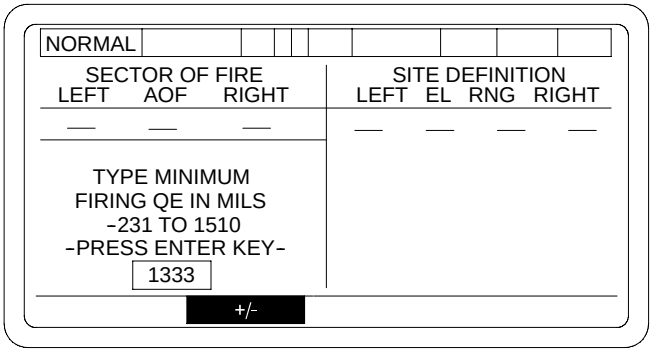


06pc215t

Pressing the ENTER key will display SECTION IN ORDER menu. During NORMAL OPERATIONS the last value entered shall be displayed.

d. MINIMUM QUADRANT ENTRY. Upon completion of One Line SITE DATA, press USE ALL and a display will appear in the left side of the SITE DEFINITION screen. Enter the MIN QE obtained from the POC for the current position. Upon voice verification of the MIN QE with the POC, press the ENT key. This will display the SECTION IN ORDER at FIRING AREA/POINT screen.

e. Send piece status to POC.

**NOTE**

COS will obtain MAX QE and send updated piece status to POC (see para 2-15E.5.7.2.1).

2.15C.2.3.1 SITE DEFINITION screen display. With the GUNNER sighting through the tube, the COS elevates or depresses the gun tube to obtain immediate Crest. COS traverses right while the GUNNER looks through the gun tube. When an obstruction appears, data for the Left limit SITE DEFINITION can be entered by pressing the ENT key. The SITE DEFINITION screen with Left Azimuth will be displayed. Perform steps d and e to establish 6400 mils SITE DEFINITION.

**NOTE**

This procedure is conducted as part of Position Improvement.

## 2-15C PDFCS TRAVEL MODE - CONTINUED

### 2-15C.2 Emplacement Fire Point/Fire Area - Continued

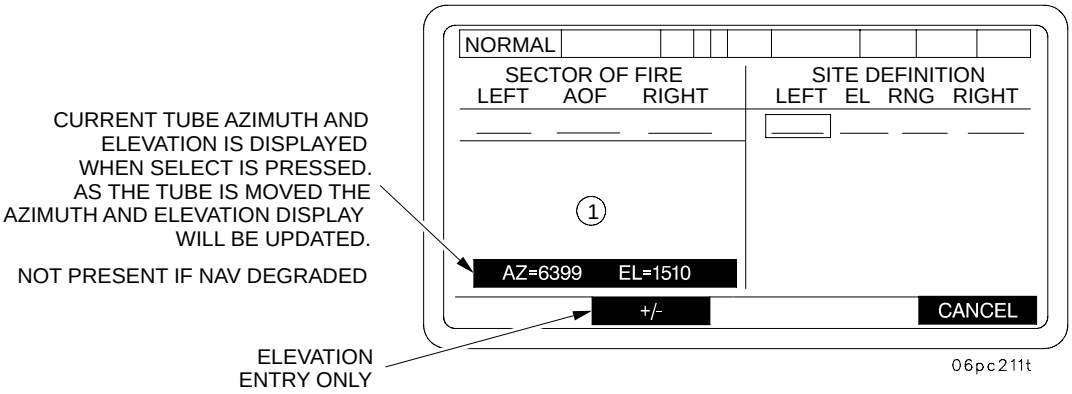


(1) THE FOLLOWING PROMPTS ARE DISPLAYED DEPENDING ON WHICH FIELD IS SELECTED:

| | |
|---|---|
| **WHEN "LEFT" IS SELECTED**<br>MOVE TUBE OR TYPE<br>LEFT EDGE OF SITE<br>IN MILS:<br>0000 TO 6399<br>-PRESS ENT KEY- | **WHEN "EL" IS SELECTED**<br>MOVE TUBE OR TYPE<br>ELEVATION OF SITE<br>IN MILS:<br>-231 TO 1510<br>-PRESS ENT KEY- |
| **WHEN "RNG" IS SELECTED**<br>TYPE RANGE TO SITE<br>IN METERS:<br>0001 TO 9999<br>-PRESS ENT KEY- | **WHEN "RIGHT" IS SELECTED**<br>MOVE TUBE OR TYPE<br>RIGHT EDGE OF SITE<br>IN MILS:<br>0000 TO 6399<br>-PRESS ENT KEY- |

**NOTE: MASK HEIGHT CANNOT EXCEED 10,000 METERS, THEREFORE:**

(A) UPPER LIMIT ON RANGE WILL CHANGE DEPENDING ON CURRENT MASK ELEVATION

(B) UPPER LIMIT ON ELEVATION WILL CHANGE DEPENDING ON CURRENT MASK RANGE

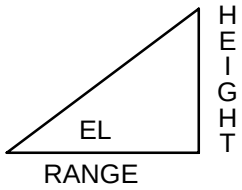


**NOTE: WHEN CURRENT TUBE POSITION IS USED TO SET MASK ELEVATION:** IF THE RANGE FIELD CONTAINS AN ENTRY WHICH RESULTS IN A MASK EXCEEDING 10,000 METERS, THE RANGE FIELD WILL BE RESET TO THE MAXIMUM ALLOWED VALUE AND THE FOLLOWING MESSAGE WILL BE DISPLAYED: **"WARNING - RANGE SET TO MAXIMUM", "ACK"**

AUTOMATIC SELECTION, "BOXING" will occur starting from field LEFT and then continuing from LEFT to RIGHT, to field EL, RNG, and RIGHT, after each previous entry has been ENTERED.

# 2-15C PDFCS TRAVEL MODE - CONTINUED

## 2-15C.2 Emplacement Fire Point/Fire Area - Continued

**NOTE**

Numerical value must be entered before sign. Default sign is (+).

a. Select next limit column (EL) to display Elevation SITE DEFINITION screen. Enter elevation data in the same manner as left limit (type in data or use gun tube position). If elevation is below zero, press +/- key to place minus sign in front of numbers to be entered (used only when typing in data). Press ENT key.

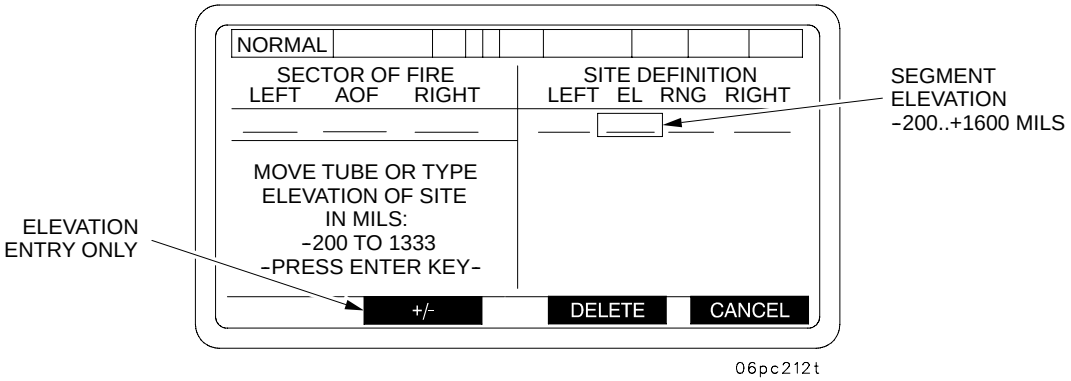


b. Select next limit column (RNG) to display the Range SITE DEFINITION screen. Enter range to crest and press ENT key. (Data for this must be typed in; gun tube position cannot be used.)

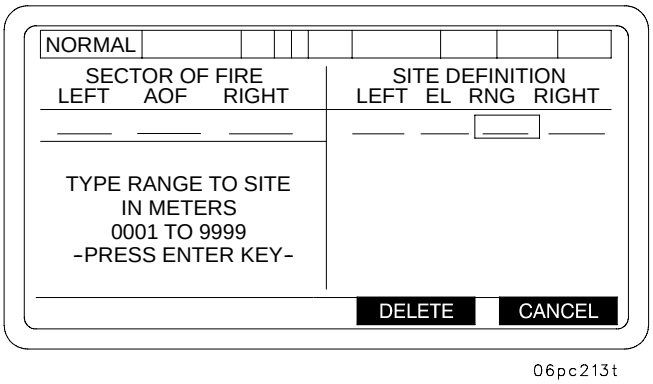

# 2-15C PDFCS TRAVEL MODE - CONTINUED

## 2-15C.2 Emplacement Fire Point/Fire Area - Continued

c. Select next limit column (RIGHT) to display the right limit SITE DEFINITION screen. Data for this limit can be typed in, or use tube position. Enter data by pressing ENT key.

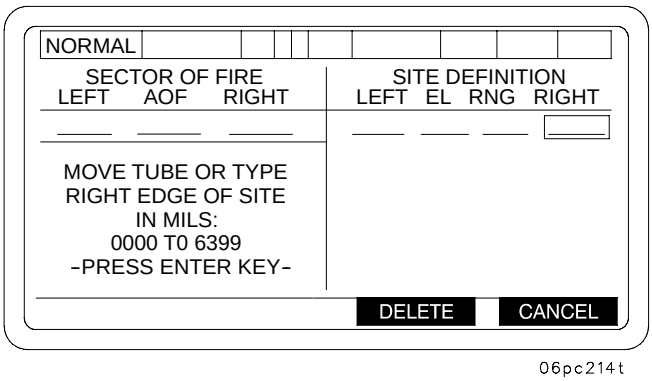


06pc214t

d. Using arrow key, move cursor box to next available line and to the left and identify next obstruction.

e. Sequence can be repeated as many as seven times if needed.

2-15C.2.4 SECTION IN ORDER. When all data is correct, press ENTER key. This will bring up a SECTION IN ORDER WITHIN FIRE AREA or SECTION IN ORDER AT FIRE POINT screen depending on whether the Move Order was a move to a FIRE AREA or FIRE POINT. An ordered move of any other type would be indicated as such in field 11 of the menu.

**NOTE**

When SECTION IN ORDER screen is displayed, the commanded deflection (CMD DEFL) may be either: 1) the Azimuth of Fire (Azimuth of LAY) from the Move Order, expressed at 3200 deflection. Since this is also the “Base Azimuth” position (the difference between the 3200 reference and the ordered Azimuth of LAY); or 2) if a Final Protective Fire (FPF) or Priority (PRI) target has been designated by the POC, the CMD DEFL will be the deflection from “Base Azimuth” to the FPF; or 3) when a Manual Move Order has been done, the CMD DEFL is the default Azimuth of Fire (Base Azimuth) entered upon initialization.

# 2-15C PDFCS TRAVEL MODE - CONTINUED

## 2-15C.2 Emplacement Fire Point/Fire Area - Continued

2-15C.2.4 SECTION IN ORDER - Continued

**NOTE**

LOAD/LAY and STOW will not be displayed unless the gun switch is in the ON position.

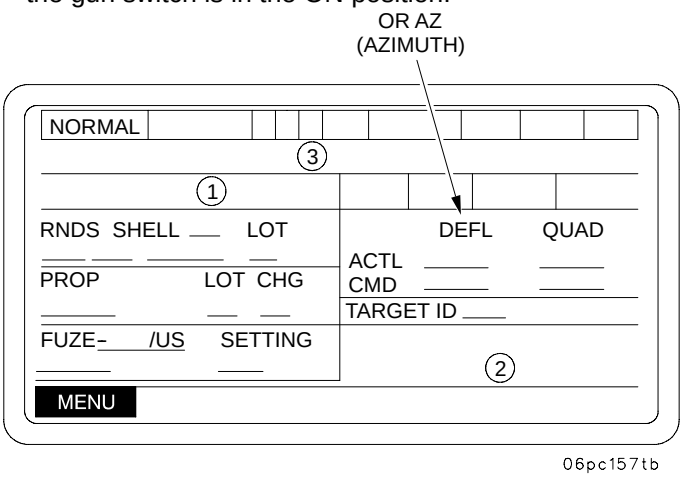


2-15C.2.5 Establish Distant Aiming Point or Set Collimator (Optional).

**NOTE**

If time permits, the crew should set out collimator or select a DAP and set the PANTEL with the tube "Base Azimuth". If this is not possible immediately, traverse back to "Base Azimuth" using one of the following procedures based on the conditions indicated on the SECTION IN ORDER screen.

a. Use this procedure when the CMD DEFL reads 3200 deflection and there is no FPF nor PRIORITY (PRI) target displayed on the SECTION IN ORDER screen. Under these conditions, CMD DEFL is using the Azimuth of Fire (Base Azimuth). To move the tube to Base Azimuth, 1) Turn on hydraulic power, 2) Set GUN SERVO switch to ON, and 3) Press/hold the LOAD key until the LOAD indicator is highlighted in the upper right corner of the screen. Tube is now laid on Azimuth of Fire (Base Azimuth) and both the ACTL DEFL and CMD DEFL should read 3200. 4) Sight onto the Collimator or the DAP and set 3200 Deflection on the PANTEL.

## 2-15C PDFCS TRAVEL MODE - CONTINUED

### 2-15C.2 Emplacement Fire Point/Fire Area - Continued

2-15C.2.5 Establish Distant Aiming Point or Set Collimator (Optional) - Continued

b. Use this procedure when the CMD DEFL shows a deflection other than 3200 and there is either an FPF or PRIORITY (PRI) target displayed on the SECTION IN ORDER screen. The CMD DEFL is the Firing Azimuth for the FPF/PRI target, so the LOAD key cannot be used to move the tube to 3200 deflection. Under these conditions, 1) use the Hydraulic Power Handle Controls to traverse the tube until the ACTL DEFL reads 3200 deflection. Tube is now laid on Center of Sector (Base Azimuth). 2) Sight onto the Collimator or the DAP and set 3200 Deflection on the PANTEL.

**NOTE**

If the PDFCS fails, use the Azimuth of Fire recorded during emplacement as Azimuth of LAY (Base Azimuth) and use reciprocal lay procedures with the aid of an operational howitzer.

2-15C.2.6 Final Laying of Gun Tube at FIRING AREA. It is necessary to lay the gun tube on the Azimuth of Fire (from MOVE ORDER) or the FPF/PRI azimuth/deflection. The SECTION IN ORDER screen will show a difference between the ACTL DEFL and the CMD DEFL. The ACTL and CMD values must be the same for the gun tube to be layed. To accomplish this: 1) set GUN SERVO switch to ON, and 2) depress and hold LOAD key (para 2-11.2). The gun will traverse to the CMD DEFL (match ACTL and CMD) and to the LOAD ELEVATION stored at initialization. When the LOAD indicator is highlighted, release the LOAD key.

## 2-15D PDFCS SECTION IN ORDER.

When the PDFCS has been properly initialized, the howitzer is then moved to a FIRE AREA. Upon arrival at the FIRE AREA the howitzer is emplaced at a FIRE AREA at which time SITE and MIN QE DATA are entered into the PDFCS. Once the data is correctly entered, a SECTION IN ORDER AT FIRE AREA screen is displayed. The howitzer and crew are now ready to receive and carry out a fire mission. If time permits, a DAP is selected and the PANTEL is set for 3200 deflection on the Base Azimuth. For position improvement, establish alternate Aiming Points (DAP/Collimater), verify Boresight and enter MAX TUBE EL.

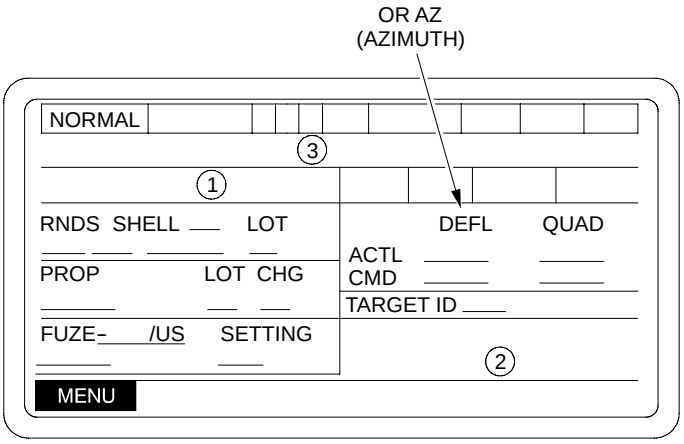


06pc157tb

## 2-15E PDFCS FIRE MISSION.

Fire missions are usually generated as a result of a message from the BCS to the PDFCS. Included in the message are target location, method of control, and ammunition to fire (if ammunition is not specified the PDFCS will default to its own selection). When the message is received by the PDFCS, a fire mission screen is displayed on the PDU and an audible alert is sounded through the intercom system. The Ballistics Computer will then compute the ballistics (azimuth and quadrant), based on ammunition data (projectile, propellant, and fuze), target location and the location of the howitzer (provided by the navigation system). The ballistic solution is then displayed on the fire mission screen.

A typical FIRE MISSION screen contains the following:

**WARNING**

**The crew compartment must be adequately ventilated during all firing using the LEAD FILTER or ventilation system in accordance with para 2-22.2.**

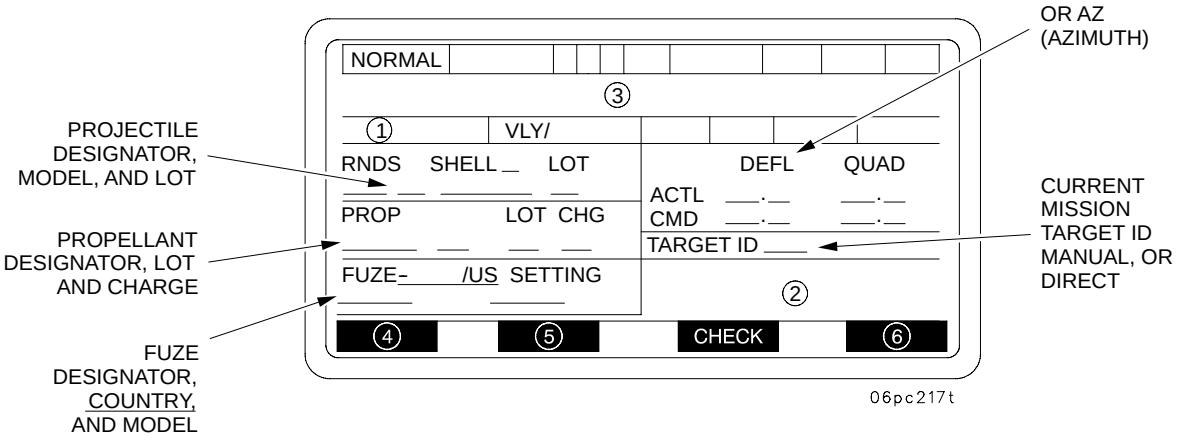


Listed below are the legal values for each field of SD-16A.

VLY / = Current volley being displayed; 1/1, 1/2 or 2/2

**NOTE**

The 1/1, 1/2, and 2/2 data shall not be displayed for operator initiated fire missions and missions that are in fire commands format.

RNDS = Number of rounds remaining to fire 1..9
SHELL = Shell model and mnemonic
SHELL LOT = A..Z
PROP = Propellant model
PROP LOT = A..Z
CHG = Propellant charge designator (see Table 2-1)
FUZE = Fuze model, Country and mnemonic
SETTING = Computed fuze setting, “PD” or “DELAY”
DEFL (or AZ) = 0.0..6399.9 mils
QUAD = -200.00..+1600.0 mils
TARGET ID = Current mission target identification

## 2-15E PDFCS FIRE MISSION - CONTINUED

1. Blank = Fire mission is not a sheaf
   SHEAF PT = This gun is participating in a multi-gun sheaf
   SHEAF a/s = This run is conducting a single gun sheaf where: a. Current aimpoint number; b. Number of sheaf points

2. Blank - Displayed when none of the following apply
   REMEMBER TO UPDATE INVENTORY = Direct or manual fire mission and none of the following apply.
   WARNING TUBE IS NOT IN LAY POSITION = WC is operational and the tube is not in the lay window.
   TUBE MUST BE LAID MANUALLY = WC is not operational.
   CALL FDC IF ROUND IN TUBE = Awaiting tube clear and crew not authorized to fire.
   PRESS SHOT OR CLEAR TO ACK CEASELOAD = PDFCS has received a ceaseload request.
   Min QE violated ACK.
   SECTOR OF FIRE VIOLATION = Gun-target line is outside the defined sector of fire.
   SITE VIOLATION = Firing parameters violate defined mask.
   INSUFFICIENT AMMO SHELL/FUZE/PROP = Insufficient inventory quantities.
   INSUFFICIENT AMMO SHELL/FUZE = Insufficient inventory quantities.
   INSUFFICIENT AMMO SHELL/PROP = Insufficient inventory quantities.
   INSUFFICIENT AMMO FUZE/PROP = Insufficient inventory quantities.
   INSUFFICIENT AMMO SHELL = Insufficient inventory quantities.
   INSUFFICIENT AMMO FUZE = Insufficient inventory quantities.
   INSUFFICIENT AMMO PROP = Insufficient inventory quantities.
   MAX TUBE EL EXCEEDED = Computed QE exceeds the defined maximum tube elevation.
   MINIMUM QE VIOLATED = The Gun Tube has violated the minimum QE as entered by the PDFCS operator in the Enter Minimum Firing QE Display.

## 2-15E PDFCS FIRE MISSION - CONTINUED

3. FIRE WHEN READY = Fire at will
   UNDER VOICE ORDERS = Manual fire mission
   COMPUTING DO NOT LOAD = PDFCS computing or waiting for operator response
   DO NOT LOAD = Do not load missions
   LOAD LAY THEN PRESS READY = At my command or Copperhead mission
   WAIT FOR COMMAND = At my command after ready
   WAIT XXX SECONDS = Time to fire mission or continuous interval mission
   FIRE = COMMAND TO FIRE
   FPF END OF MISSION = EOM or ceaseload during FPF
   EARLY END OF MISSION = EOM received after load but before all rounds fired
   CEASELOAD = Ceaseload received after load but before all rounds fired
4. SHOT = PDFCS requires notification of round fired
   READY = PDFCS requires notification of operator ready to fire
5. CLEAR = PDFCS requires notification of tube clear
   OTHER VLY = Other volley information is available for operator viewing
6. ABORT = Fire mission other than direct or manual active
   EOM = Direct or manual mission active

**NOTE**

Some of the alerts listed in item 2 above will result in an “OK TO SHOOT?, YES, NO” short error message to the PDFCS operator.

MINIMUM QE VIOLATED  ACK

The Gun Tube has violated the minimum QE as entered by the PDFCS operator in the Enter Minimum Firing QE Display. An audio alert shall sound until the ACK key is pressed.

MINIMUM QE NO LONGER VIOLATED  ACK

The Gun Tube no longer violates the minimum QE as entered by the PDFCS operator in the Enter Minimum Firing QE Display. An audio alert shall sound until the ACK key is pressed.

Fire Mission Received. When displayed, press ACK to confirm receipt of fire mission.

## 2-15E PDFCS FIRE MISSION - CONTINUED

### 2-15E.1 Platoon Operation Center.

Although the howitzer has the ability to compute its own firing data, the actual firing of a mission is controlled by the POC. The control method is included within the fire mission message and displayed on the FIRE MISSION screen. Control methods are as follows:

a. AT MY COMMAND. In this method, the POC controls when the howitzer is fired. (An example is a normal Copperhead mission.) The Method of Control field of the FIRE MISSION screen will tell the COS to LOAD, LAY, then press READY key. When these are accomplished, a message that the howitzer is ready to fire is sent to the POC. When the FIRE COMMAND is issued by the POC, an audible alert and an alternating tone is sounded and a FIRE prompt is displayed. If more than one volley is to be fired, the other volleys will be FIRE WHEN READY.

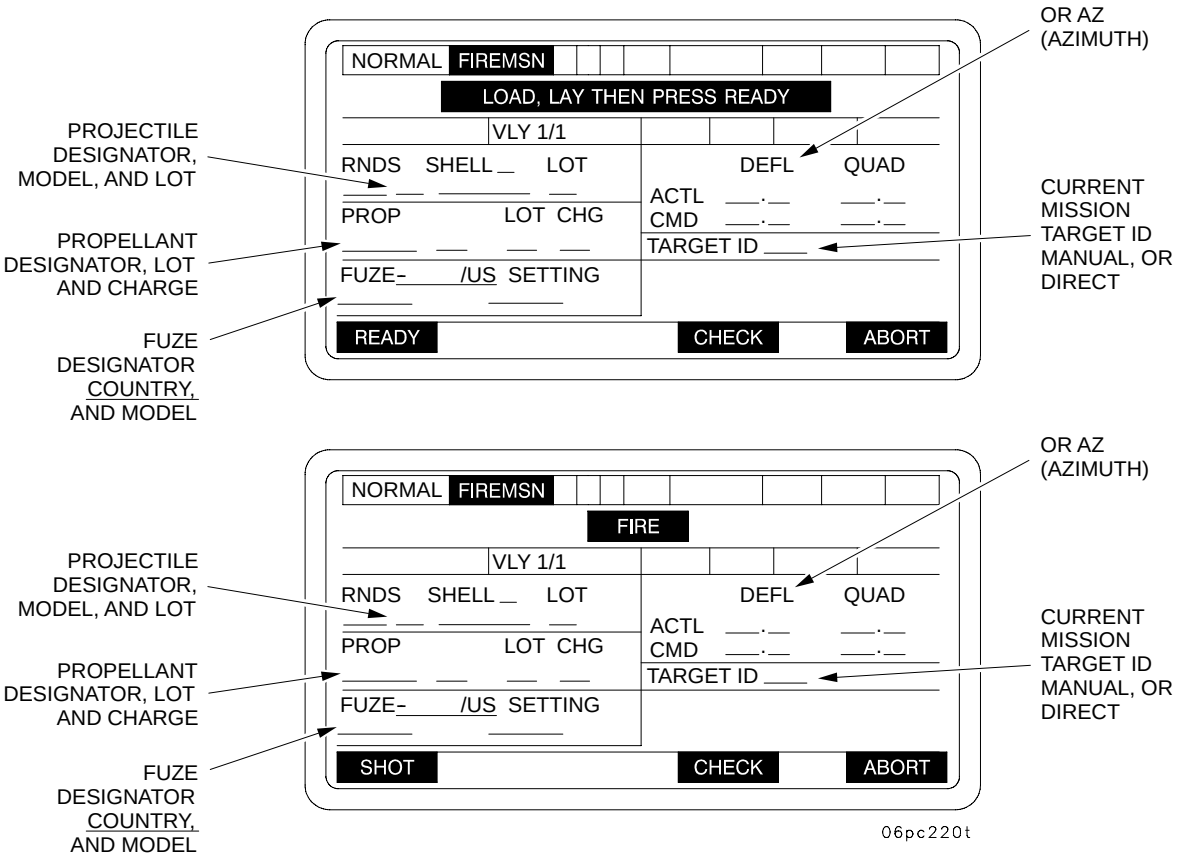

# 2-15E PDFCS FIRE MISSION - CONTINUED

## 2-15E.1 Platoon Operation Center - Continued

b. DO NOT LOAD. This is a restrictive command that prohibits loading and firing. This is used when it is anticipated that significant time will elapse between loading and firing. When the DO NOT LOAD command is canceled, then the FIRE command is issued, and the same audible and visual alerts will be received as in AT MY COMMAND.

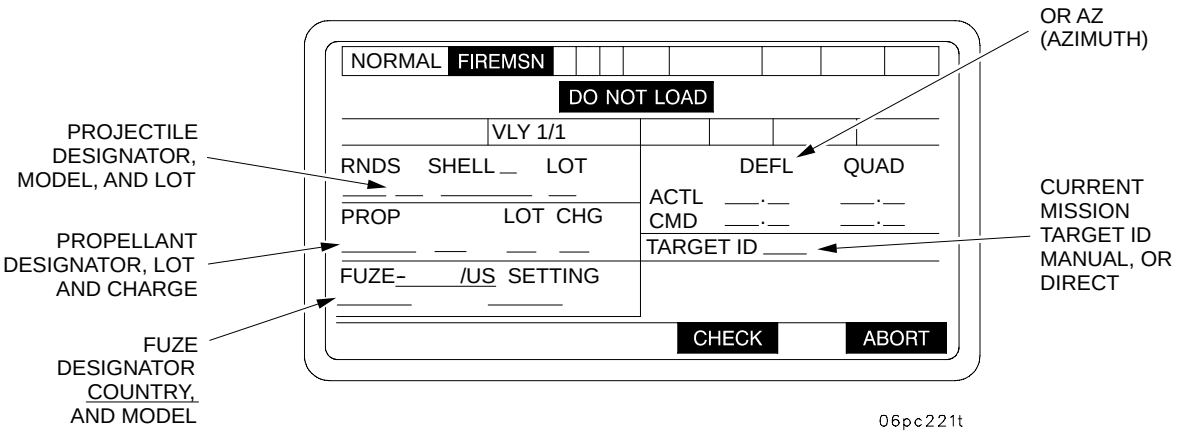


c. TIME TO FIRE (TTF) SEQUENCE. This sequence consists of the following:

(1) Ballistic sequencing is performed. (COMPUTING DO NOT LOAD)

(2) If no ABORT is performed during the ballistic sequencing the PDFCS operator is given the data.

(3) The PDFCS operator is told to “WAIT FOR XXX SECONDS” where xxx is the number of seconds remaining until time to fire.

(4) The “WAIT FOR XXX SECONDS” prompt is updated each second.

(5) When the countdown has expired, the PDFCS operator is told to “FIRE”.

(6) If this is not a FPF mission, then when the first shot out is detected, and there is a Continuous Fire Interval specified, processing continues using the Continuous Fire Interval sequence. If there are more rounds to fire, and a Continuous Fire Interval is not specified, the PDFCS operator is told to “FIRE WHEN READY” (similar to when ready sequencing subsequent rounds). Otherwise, if shot out is not detected within 20 seconds then the mission is automatically ended.

If this is a FPF mission, then when shot out is detected the PDFCS operator is told to “FIRE WHEN READY” again. This is repeated until the mission is ended and no rounds complete is generated.

(7) When rounds complete is detected the mission is automatically ended.

## 2-15E PDFCS FIRE MISSION - CONTINUED

### 2-15E.1 Platoon Operation Center - Continued

d. CONTINUOUS FIRE INTERVAL SEQUENCE. The Continuous Fire Interval sequence shall be as follows for the second and subsequent rounds in a mission where a continuous fire interval is specified.

(1) Following the first round fired using the sequences described above, the operator shall be told to "WAIT FOR XXX SECONDS" where xxx is the number of seconds remaining until time to fire.

(2) The "WAIT FOR XXX SECONDS" prompt shall be updated each second.

(3) When the countdown has expired, the operator is told to "FIRE".

(4) If all rounds in the mission have not been shot, processing will sequence through steps 1, 2, and 3 above.

(5) When rounds complete is detected, the mission is automatically ended.

### 2-15E.2 Firing Mission.

**WARNING**

**The crew compartment must be adequately ventilated during all firing using the LEAD FILTER or ventilation system in accordance with para 2-22.2.**

When a fire mission is received, visual as well as an audible alert is given. The visual alerts are FIREMSN in Field 2 and OPERATOR ALERT AND ACK display. The audible alert can be heard by all crewmembers. When a fire mission is in process, each crewmember will perform his portion of the following:

a. GUNNER and CANNONEER stow seats (if not previously stowed).

b. Driver starts engine and/or raises idle speed to 1000-1200 rpm.

c. COS issues the fire order (for example, 1 round HE; charge 4 green bag; Fuze Time, Time 25.0) and activates the HYDRAULIC POWER switch on the hydraulic control box and the GUN SERVO switch on the PDU.

d. Cannoneer turns LEAD FILTER switch on the Accessory Control Box to ON and moves Vent Duct Control Handle into UP position.

e. GUNNER opens breech (first round only).

f. CANNONEER positions rammer to RAM position.

g. GUNNER prepares propellant (charge/zone taken from bustle stowage).

h. CANNONEER prepares projectile and fuze (sets time on fuze if necessary).

i. COS verifies projectile, fuze, fuze time and propellant and depresses LOAD key on PDU (if necessary).

j. When the tube is in the LOAD position, the CANNONEER places the projectile on the ram tray and activates rammer.

k. When the ramming cycle is complete, the CANNONEER places the rammer in the stowed position.

l. GUNNER places propellant in powder chamber and closes breech.

**NOTE**

When the PDFCS has laid the gun and the LAY key is highlighted the gun must stay within +/- 0.9 mils of the commanded deflection.

## 2-15E PDFCS FIRE MISSION - CONTINUED

### 2-15E.2 Firing Mission - Continued

m. The COS presses and holds the LAY key on the PDU until the cannon is laid on the COMMAND FIRING data.

n. COS ensures that the gun is in the LAY position by verifying and announcing LAY light is highlighted (ACTUAL and COMMANDED DEFLECTION) and QUADRANT is within tolerance (+/- 0.9) and the prompt "WARNING TUBE IS NOT IN LAY POSITION" is no longer displayed.

o. GUNNER verifies LAY data. If data is correct GUNNER will announce "Verified." (If data is incorrect GUNNER will announce "Check firing".)

p. COS gives the command to "PRIME."

**NOTE**

During high angle missions or illumination missions, it is recommended prime be done at load elevation.

q. COS commands "Hookup," CANNONEER attaches lanyard to firing block and announces "Hookup."

r. COS announces, "FIRE."

**NOTE**

If the Navigation Subsystem or PMVS are out, the PDFCS will not detect the shot, and COS must press the SHOT soft key after each round.

s. CANNONEER pulls the lanyard to fire the round.

t. The PDFCS is capable of automatically detecting Shot. In most cases pressing the SHOT soft key is not required. When a round is fired, the Navigation Subsystem and PMVS will detect the round. After the round is fired and detected by the PDFCS, the SHOT soft key will automatically disappear for 5 seconds, the Fire Mission will automatically decrement by one round (i.e. rounds to complete mission will decrease by one), and the Ammo Inventory will automatically be adjusted. In the very rare case that the PDFCS does not detect shot, the COS must press the SHOT soft key as before.

u. Cannoneer turns on Personnel Fan (Exhaust) switch on the Accessory Control Box and moves the Vent Duct Control Handle into DOWN position. Operate Personnel Fan for 1-2 minutes until all fumes are exhausted.

2-15E.2.1 Subsequent Rounds. The first procedure is also used for all subsequent rounds in a fire mission. When all rounds have been fired for the mission, a VERIFY EXPENDED AMMO screen will be displayed. Ammunition accountability is covered in para 2-15E.3.

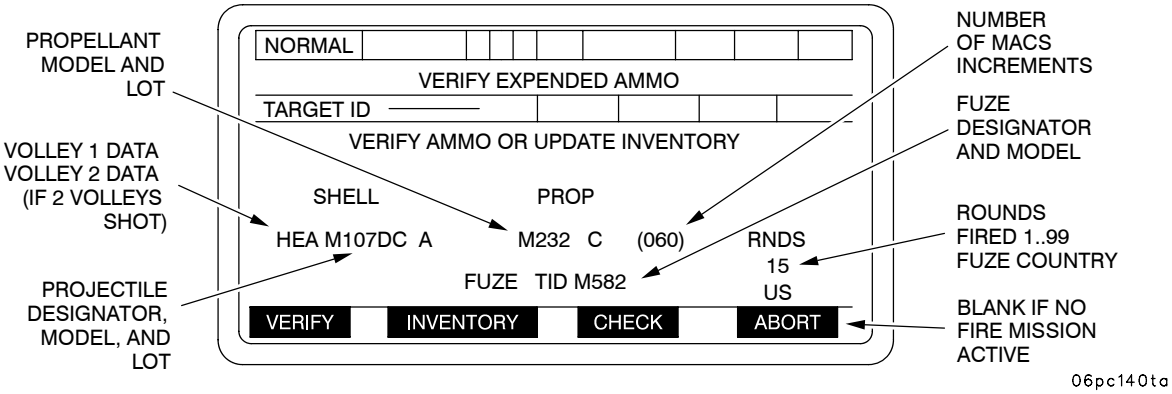

## 2-15E PDFCS FIRE MISSION - CONTINUED

### 2-15E.3 Ammunition Accountability.

**NOTE**

- If a shell, fuze or propellant is entered in the PDFCS inventory, but the quantity is insufficient for the mission, or zero, the PDFCS will prompt the Chief of Section to accept or reject the mission (in case a new load of ammunition just arrived and has not been entered into inventory yet).
- If a fire mission is activated while you are in any of the inventory management menus, all completed entries will be saved automatically.

It is essential that accurate ammunition updates to the PDFCS be done in order to be able to fire all missions received. This should be done after a mission is fired. When all rounds in a mission have been fired, a VERIFY EXPENDED AMMO screen is displayed. This screen asks the operator either to verify ammunition fired or to update the ammo inventory. This is accomplished as follows:

a. If the ammunition shown in the lower part of the VERIFY EXPENDED AMMO screen is an accurate account of the ammunition fired, press VERIFY key, to update the ammunition count. This updates the PDFCS ammunition count automatically.

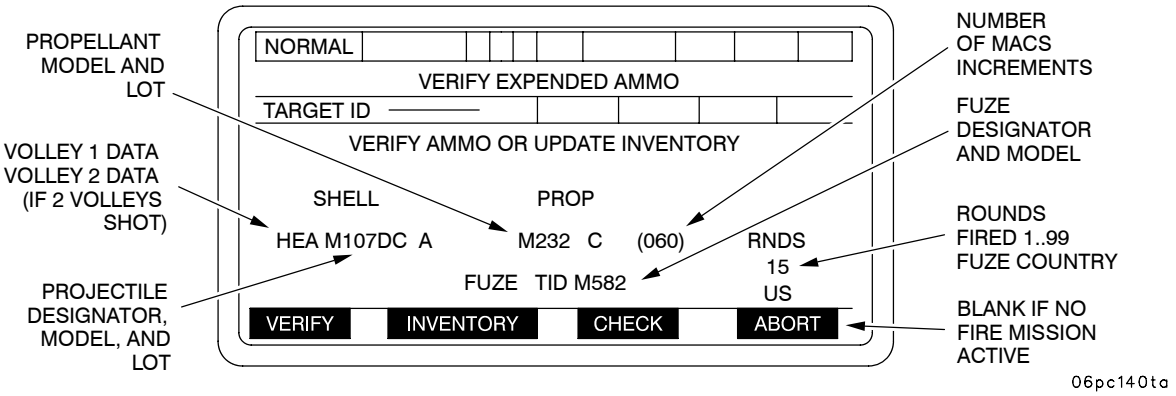

## 2-15E PDFCS FIRE MISSION - CONTINUED

### 2-15E.3 Ammunition Accountability - Continued

b. If the ammunition shown on the VERIFY EXPENDED AMMO screen is not an accurate account of ammunition fired (for example, a compatible fuze was used as a substitute for the fuze specified in the mission), press the INVENTORY key. This causes an INVENTORY MANAGEMENT screen to be displayed.

**NOTE**

When INVENTORY key is pressed, SHELL, PROP and FUZE must be updated.

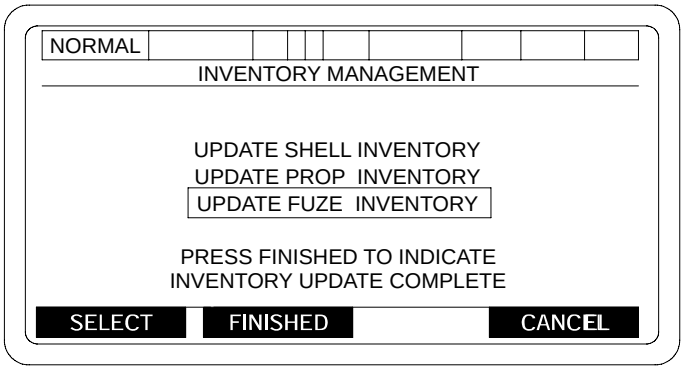


06pc172m

c. This will allow the operator to manually input the type of round actually fired and correct the ammo inventory.

d. If FINISHED is pressed at this point, the operator will be returned to a ROUND COMPLETE screen and none of the ammo from that fire mission will be subtracted from the inventory.

## 2-15E PDFCS FIRE MISSION - CONTINUED

### 2-15E.4 End of Mission.

Notification that a Fire Mission has ended is sent by an END OF MISSION (EOM) message from the POC. Normally, this is done when all rounds requested in a Fire Mission have been fired. When all the rounds for a mission have been fired, a ROUNDS COMPLETE OR MISSION PAUSE, AWAITING EOM OR CONTINUATION OF MISSION screen will be displayed until an EOM message is sent from the POC. When the EOM message is received by the PDFCS, an END OF MISSION screen is displayed.

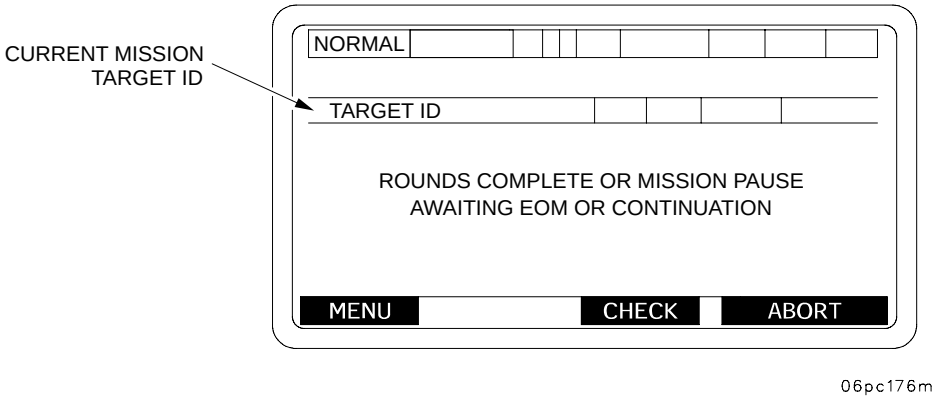


**CAUTION**

Operate Personnel Fan (Exhaust) switch on the Accessory Control Box with the Vent Duct Control Handle in DOWN position for 2 minutes when crew members observe fumes, smoke or indication of carbon monoxide build up in the crew compartment.

**NOTE**

While awaiting EOM or continuation of a mission, you can access the SETUP AND INFORMATION menus by pressing the MENU key (e.g. to update inventory to add new ammo received). The PDFCS will automatically interrupt whatever you are doing if the fire mission is continued.

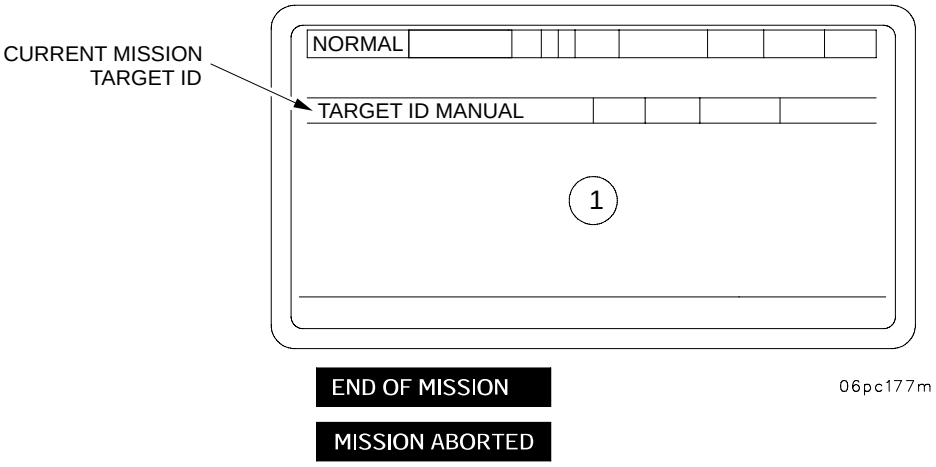

# 2-15E PDFCS FIRE MISSION - CONTINUED

## 2-15E.5 PDFCS EMERGENCY MISSION

Because the M109A6 makes frequent tactical and survivability moves, receiving a Fire Mission while moving will become a routine event. During a move, a Fire Mission order may be sent requiring the individual howitzer to stop, emplace, and fire on a target at any time. When this type of order is sent, an audible alert and a visible alert in the form “FIREMSN RECEIVED”, “ACK” in field 16 is displayed to the operator.

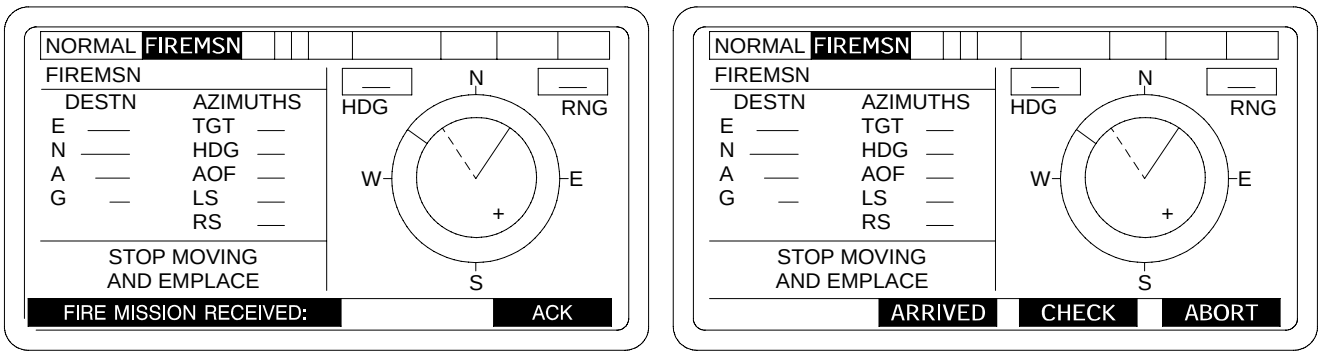


06pc143t

2-15E.5.1 Emplace.

The chief of section must ACK the mission and select a suitable firing position as quickly as possible. Depress ARRIVED soft key to receive the Fire Mission. Fire Mission data will be computed and displayed.

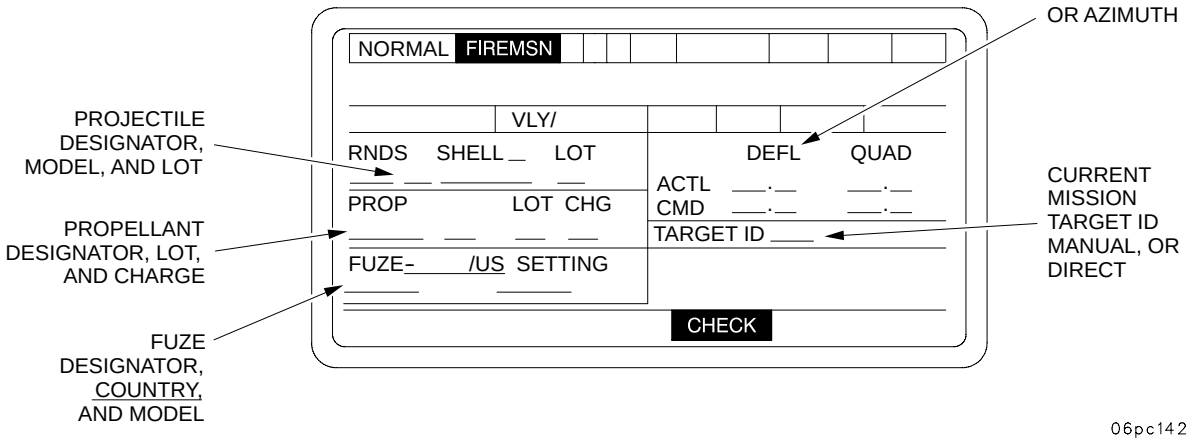


06pc142t

# 2-15E PDFCS FIRE MISSION - CONTINUED

## 2-15E.5 PDFCS EMERGENCY MISSION - Continued

2-15E.5.2 Ready Gun.

a. Set HYDRAULIC POWER switch on hydraulic control box and GUN SERVO switch on PDU to ON.

b. Release gun tube from travel lock.

c. Release cab traverse lock.

2-15E.5.3 LAY, LOAD, LAY, AND FIRE.

**NOTE**

Ballistic computations must have been completed before LAY key is depressed.

a. Depress and hold LAY key to bring gun to target Azimuth and LAY elevation. Look through tube and verify immediate Crest is clear.

b. Depress LOAD key to LAY weapon on COMMANDED deflection and LOAD quadrant.

c. Depress LAY key to LAY weapon on COMMANDED deflection and quadrant. Ensure LAY key is held until LAY indicator is highlighted.

d. On command, fire the gun.

2-15E.5.4 End of Mission.

a. When END OF MISSION message is received, wait for instructions to proceed with displacement.

b. After the END OF MISSION message, the MOVE ORDER screen with previous move mission data will be displayed.

c. Turn on Personnel Fan (Exhaust) switch on the Accessory Control Box and move the Vent Duct Control Handle into DOWN position. Operate Personnel Fan for 1-2 minutes until all fumes are exhausted.

d. Proceed to ordered destination.

**CAUTION**

Operate Personnel Fan (Exhaust) switch on the Accessory Control Box with the Vent Duct Control Handle in DOWN position for 2 minutes when crew members observe fumes, smoke or indication of carbon monoxide build up in the crew compartment.

## 2-15E PDFCS FIRE MISSION - CONTINUED

### 2-15E.6 Direct Fire Procedures Using PDFCS.

**NOTE**

While the PDFCS can be used, manual (one man-one sight) procedures have been found to be faster and just as accurate.

For direct fire against close range targets, PDFCS can be used to aid in laying the cannon. COS identifies target, states type charge, projectile and fuze to be used, estimates speed (if target is moving) and announces lead to GUNNER. COS continues direct firing procedures until target is destroyed.

a. COS first identifies direct fire target. If target consists of several weapons, he selects target that is the greatest threat to his position.

b. COS gives fire command in the following order:

| ELEMENT | EXAMPLE |
|---|---|
| Target designation | Target, lead tank |
| Target direction | Left/right front |
| Projectile, charge, fuze | Shell HE, charge 7, fuze quick |
| Lead | Lead left/right 10 |
| Method of fire | Fire at will |

**NOTE**

- "Fire at will" means to keep firing until target is destroyed or another command is given.
- COS will estimate range if he has no accurate range.
- COS will use lead chart mounted in commander's cupola (shown below) for initial lead.

**DIRECT FIRE MOVING TARGET LEAD**

| TARGET SPEED (MPH) | TARGET DIRECTION OF TRAVEL LEAD IN MILS (m) | | |
|---|---|---|---|
| | ↔ | ⤫ | ↕ |
| 5 | 5m | 5m | 0m |
| 10 | 10m | 5m | 0m |
| 15 | 15m | 10m | 0m |
| 20 | 20m | 15m | 0m |
| 25 | 20m | 15m | 0m |
| 30 | 30m | 20m | 0m |

c. On Display Unit COS sets GUN SERVO switch to OFF.

## 2-15E PDFCS FIRE MISSION - CONTINUED

### 2-15E.6 Direct Fire Procedures Using PDFCS - Continued

d. On hydraulic control box (1), turn HYDRAULIC POWER switch (2) to ON, TRAVERSE MODE switch (3) to POWER, TRAVERSE CONTROL switch (4) to GUNNER, and ELEVATE CONTROL switch (5) to COS.

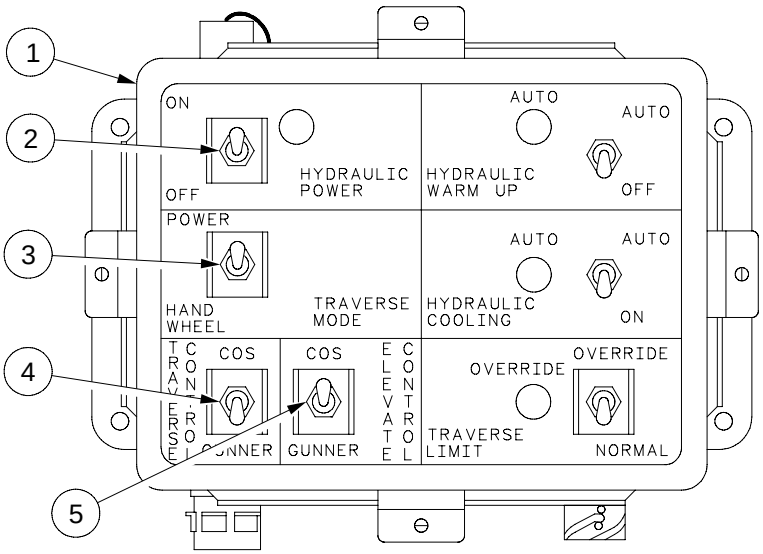


hipc173a

e. Bring SETUP AND INFORMATION menu up on Display Unit using one of the following procedures:

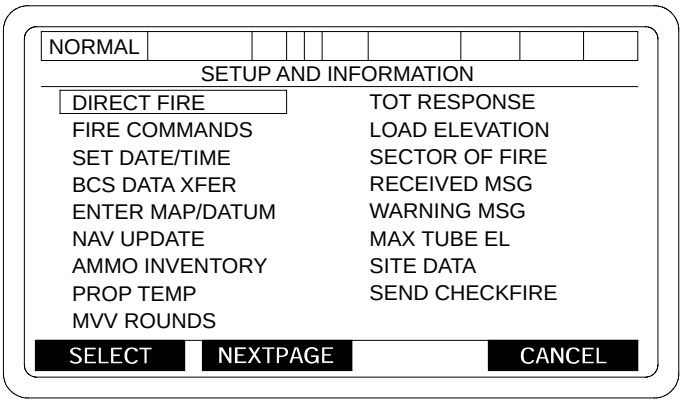


06pc180m

**NOTE**

The NAV update selection shall be available to the PDFCS operator at all times except when a fire mission is active or the navigation subsystem is unavailable.

# 2-15E PDFCS FIRE MISSION - CONTINUED

## 2-15E.6 Direct Fire Procedures Using PDFCS - Continued

f. With cursor (box) at DIRECT FIRE, press soft key located directly beneath SELECT prompt to display a DIRECT FIRE MODE ENTRY menu on PDU.

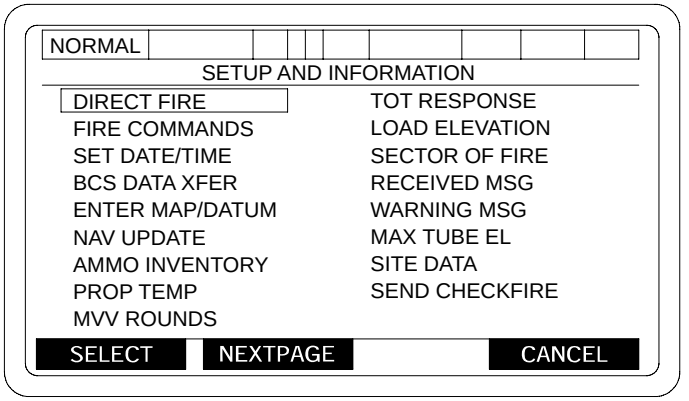


06pc180m

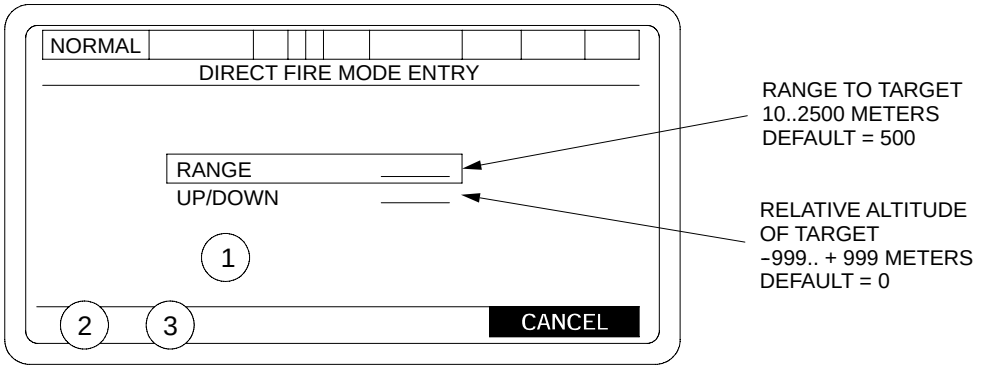


06pc183m

(1) blank - No selection made
"TYPE VALUE 10 TO 2500 METERS" - RANGE Selected.
"-PRESS ENT KEY-"
"TYPE VALUE -999 TO +999" - UP/DOWN Selected.
"-PRESS ENT KEY-"

(2) blank - If RANGE or UP/DOWN Selected

SELECT -Awaiting Selection or USE ALL. Selects current menu item.

(3) blank - If RANGE Selected

+/- - UP/DOWN Selected. Change sign of value

USE ALL - Awaiting Selection or USE ALL. Initiate direct fire mission.

## 2-15E PDFCS FIRE MISSION - CONTINUED

### 2-15E.6 Direct Fire Procedures Using PDFCS - Continued

g. Press soft key located directly beneath the USE ALL prompt of the DIRECT FIRE MODE ENTRY menu to display a FIRE MISSION menu.

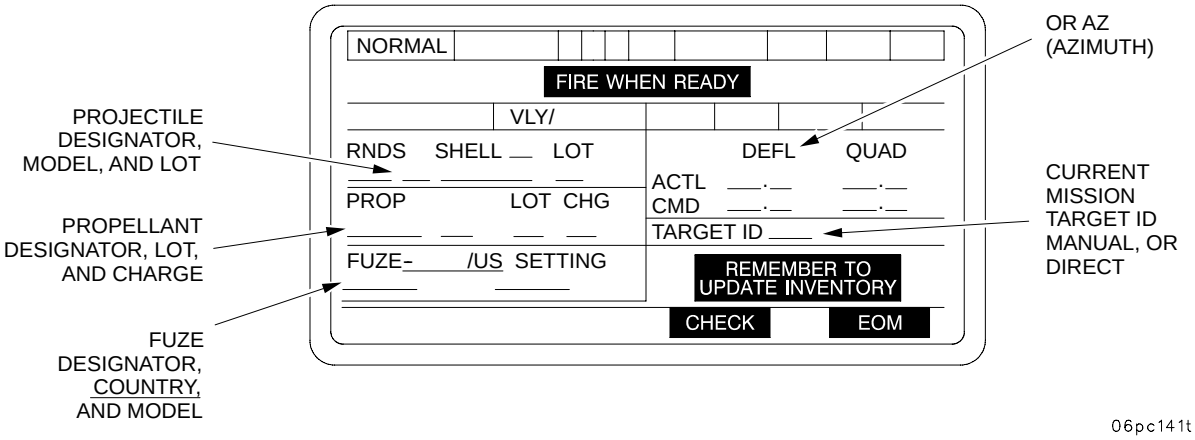


**NOTE**

You will only use the ACTL QUAD field of this screen to set tube elevation.

h. Using the DIRECT FIRE RANGE PLATE, the COS determines elevation based on estimated range. Using COS control handle, COS elevates/depresses gun to proper elevation in the ACTL QUAD field of the FIRE MISSION menu, then announces "SET" continually until howitzer is fired.

**DIRECT FIRE RANGE PLATE**
**155MM HOWITZER**

| M549A1 RAP | | M107 HE PROJECTILE | |
|---|---|---|---|
| ROCKET OFF | | M19A1 PC WB | |
| M203 SERIES PC RB | | M119A2 PC RB | |
| RANGE METERS | ELEV MILS | RANGE METERS | ELEV MILS |
| 400 | 3 | 400 | 4 |
| 600 | 5 | 600 | 7 |
| 800 | 6 | 800 | 9 |
| 1000 | 8 | 1000 | 11 |
| 1200 | 9 | 1200 | 14 |
| 1400 | 11 | 1400 | 16 |
| L15 HE PROJECTILE | | M107 HE PROJECTILE | |
| M203 SERIES PC RB | | M4A2 PC WB | |
| RANGE METERS | ELEV MILS | RANGE METERS | ELEV MILS |
| 400 | | 400 | 6 |
| 600 | | 600 | 10 |
| 800 | | 800 | 13 |
| 1000 | | 1000 | 16 |
| 1200 | | 1200 | 20 |
| 1400 | | 1400 | 23 |
| PLATE DIRECT FIRE | | P/N 12910859 | |

## 2-15E PDFCS FIRE MISSION - CONTINUED

### 2-15E.6 Direct Fire Procedures Using PDFCS - Continued

i. On subsequent rounds, the COS will estimate a new range based on observed effects and repeat step h until target is destroyed or other commands become necessary.

j. GUNNER sets azimuth counter (6) to 3200, and turns direct/indirect fire bar knob (7) to DIRECT position to engage 5.0 mils per click sight mechanism.

**NOTE**

The head of the PANTEL must remain oriented with the gun tube. The PANTEL will be oriented with the gun tube if the azimuth counter reads 3200 and the PANTEL is properly boresighted.

k. If central laying is used, GUNNER applies announced lead to azimuth counter (6). If lead is left, add the lead angle to 3200; if lead is right, subtract the lead angle from 3200. The GUNNER then sights through the eyepiece (8) and traverses tube until vertical hairline (9) of PANTEL centers on the target. If reticle method is used, GUNNER places vertical hairline (10) left or right of target the number of mils lead announced by COS.

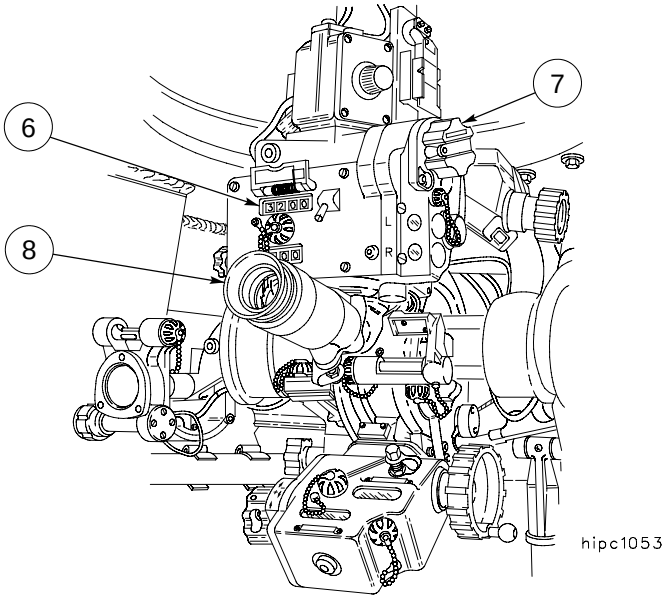


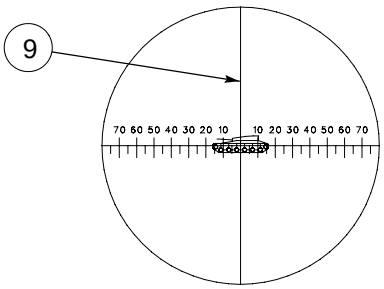


CENTRAL LAYING

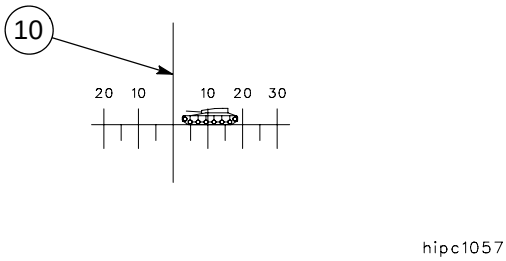


RETICLE METHOD

# 2-15E PDFCS FIRE MISSION - CONTINUED

## 2-15E.6 Direct Fire Procedures Using PDFCS - Continued

l. When GUNNER establishes correct sight picture, and COS has announced “SET,” GUNNER commands “FIRE.”

m. CANNONEER fires gun.

n. After firing, GUNNER continues to lay on target until it is destroyed or a subsequent fire command is issued.

o. COS gives subsequent fire commands based on observed effects and changes lead as necessary.

| ELEMENT | EXAMPLE |
|---|---|
| Change in Lead | Right/left 5 |

p. GUNNER turns azimuth deflection knob in 5-mil (1-click) increments to set lead change.

## 2-15E.7 System Menus.

The SETUP AND INFORMATION menu is used to access the various screens to initialize the PDFCS and align the Navigation System. It also provides access to menus allowing the operator to enter fire commands and muzzle velocities, access messages, and to monitor PDFCS STATUS and tube temperature. The operator can change the display format and intensity, input Manual Move Orders, perform a system update, and access stored targets. The operator can enter a Map Mod; can access the MAINTENANCE MODE MENU; and can update his ammunition inventory. This will complete the capabilities of the system menus.

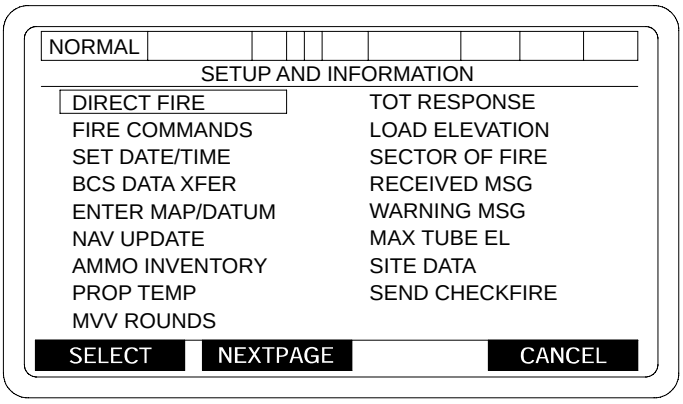


06pc180m

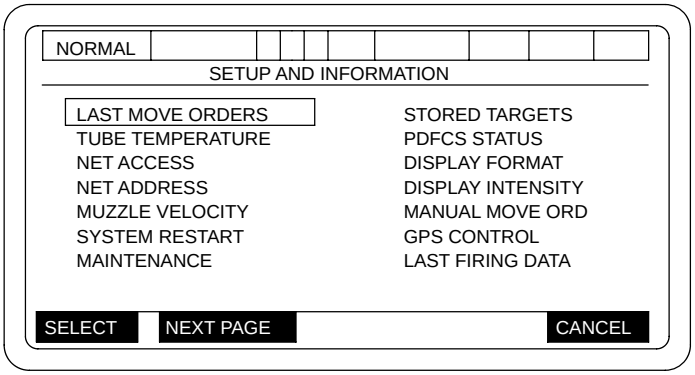


06pc185ma

## 2-15E PDFCS FIRE MISSION - CONTINUED

### 2-15E.7 System Menus - Continued

2-15.7.1 Fire Commands. If the Ballistic Computer or digital communications is out, fire commands (deflection and quadrant) will be sent by voice to the howitzer COS. The operator will enter these fire commands manually as follows:

a. Box in FIRE COMMANDS on SETUP AND INFORMATION menu and press SELECT key to display a FIRE COMMANDS ENTRY screen.

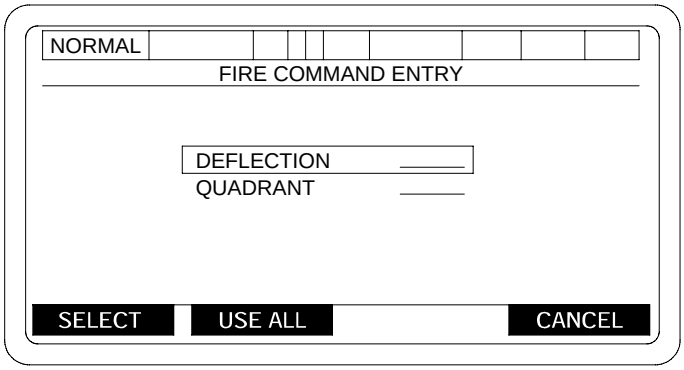


hipc4204

b. With the FIRE COMMANDS ENTRY screen displayed, box in DEFLECTION; press SELECT key; type in deflection; and press ENT key.

c. Box in QUADRANT and press SELECT key. Type in quadrant and press ENT key.

d. When correct fire command has been entered, press USE ALL key to display a FIRE MISSION screen with firing data in the COMMANDED (CMD) field.

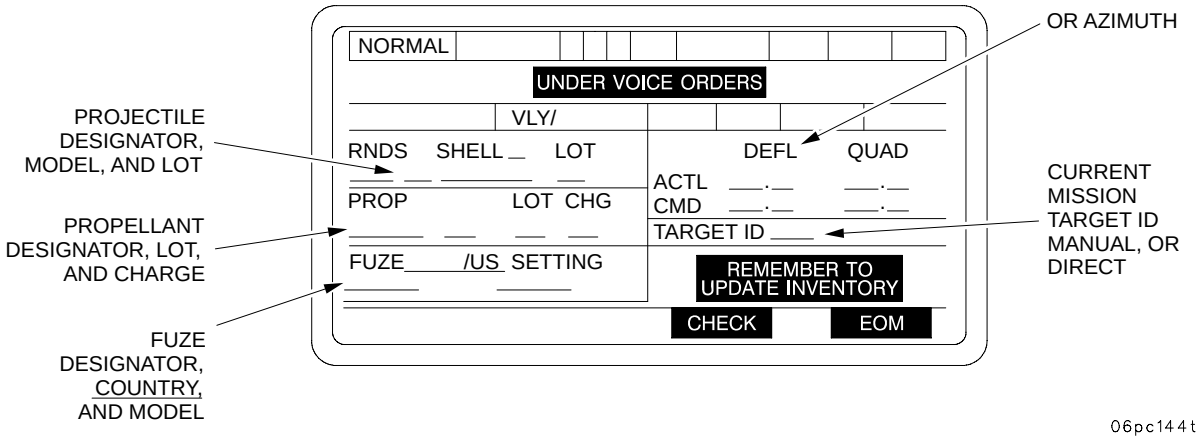


06pc144t

e. The fire mission is fired using normal procedures.

f. When the voice order to end the mission is received, press the EOM key.

g. Ammo accountability is then manually processed (para 2-15E.3).

# 2-15E PDFCS FIRE MISSION - CONTINUED

## 2-15E.7 System Menus - Continued

2-15E.7.2 Messages. The two types of PDFCS messages accessed from the SETUP AND INFORMATION menu are RECEIVED MSG and WARNING MSG. The received messages are ones received from the POC and the warning messages are generated by the PDFCS for system status. When there is a new message to read, a RCVD MSG (R) highlighted field 5 or WARN MSG (W) highlighted field 4 indicator will be displayed at the top of the screen. Access messages using the following procedures:

a. Box in desired message on SETUP AND INFORMATION menu and press SELECT key to display a RECEIVED MESSAGE/SYSTEM WARNING MESSAGE.

b. If more than one message is in the message queue, display next message by pressing the NEXT MSG key. If a message contains more than one page, display next page by pressing NEXT PAGE key.

c. To return to the SETUP AND INFORMATION menu, press CANCEL key.

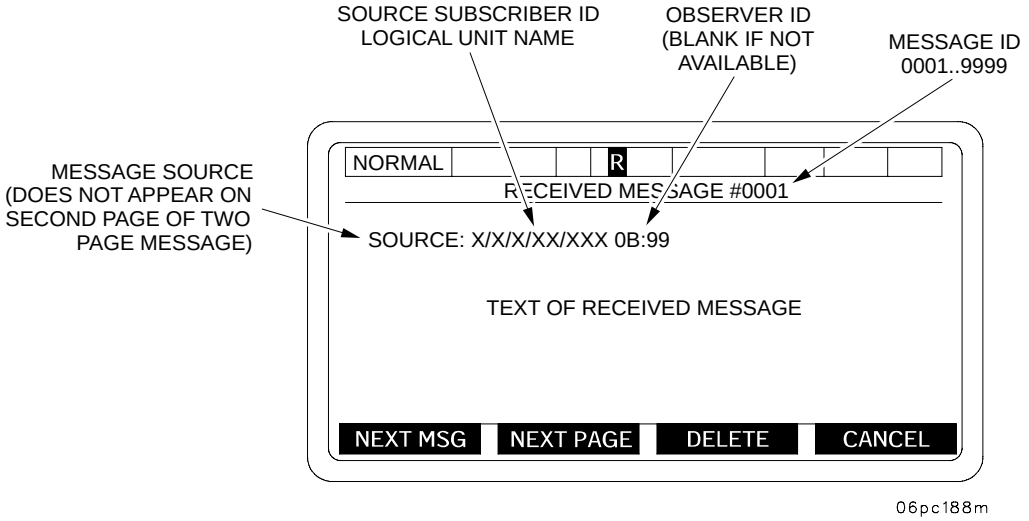


NEXT MSG = DISPLAY NEXT MESSAGE (BLANKED IF NO NEXT MESSAGE)

NEXT PAGE = DISPLAY NEXT PAGE (BLANKED IF NO NEXT PAGE)

DELETE = DELETE CURRENT MESSAGE (BLANKED IF NO MORE MESSAGES)

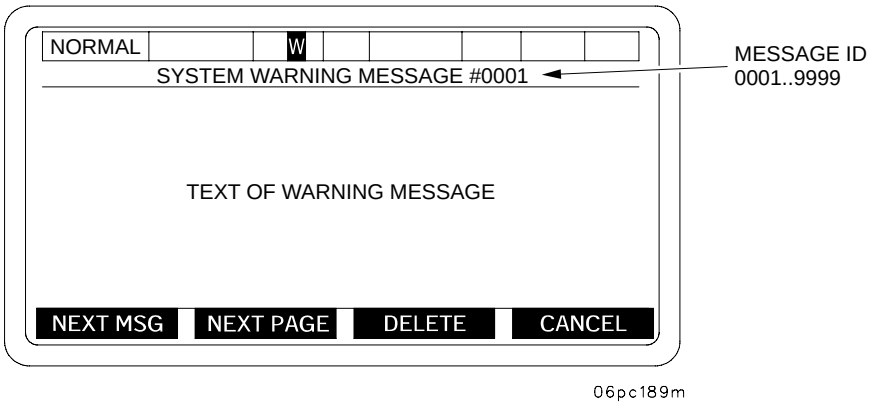


NEXT MSG = DISPLAY NEXT MESSAGE (BLANKED IF NO NEXT MESSAGE)

DELETE = DELETE CURRENT MESSAGE (BLANKED IF NO MORE MESSAGES)

# 2-15E PDFCS FIRE MISSION - CONTINUED

## 2-15E.7 System Menus - Continued

2-15E.7.2.1 MAXIMUM TUBE ELEVATION. From the SET UP AND INFORMATION menu select “MAX TUBE EL” to input the maximum tube elevation.

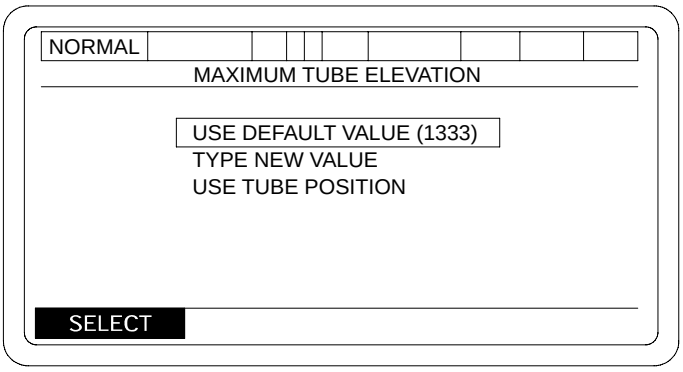


06pc154m

a. Entering MAXIMUM TUBE ELEVATION. If a maximum tube elevation is not entered, the default value as shown on the display will be entered automatically. If an elevation other than the default value is desired, the entry can be made by either of two methods:

**NOTE**

Numerical value must be entered before sign. Default sign is (+).

b. Box in TYPE NEW VALUE and depress SELECT to bring up a new MAXIMUM TUBE ELEVATION display. Enter required value for MAX TUBE EL and press ENT key.

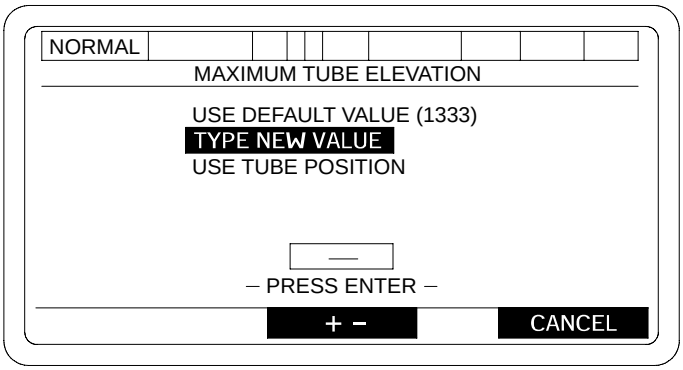


06pc155m

# 2-15E PDFCS FIRE MISSION - CONTINUED

## 2-15E.7 System Menus - Continued

c. Box in USE TUBE POSITION and press SELECT key to bring up a new MAXIMUM TUBE ELEVATION display. Using the COS or gunner's control handle, move tube to desired elevation and press ENT key.

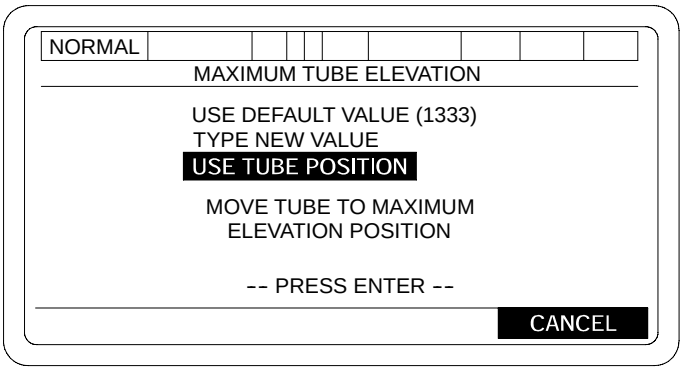


06pc156m

# 2-15E PDFCS FIRE MISSION - CONTINUED

## 2-15E.7 System Menus - Continued

2-15E.7.3 Send Checkfire. Selecting SEND CHECKFIRE will result in questions asked, “ARE YOU SURE”, “YES” “NO”. “YES” selection will cause all howitzer systems to be placed on CHECKFIRE. Only the POC/BCS can cancel the CHECKFIRE. “NO” selection = No action.

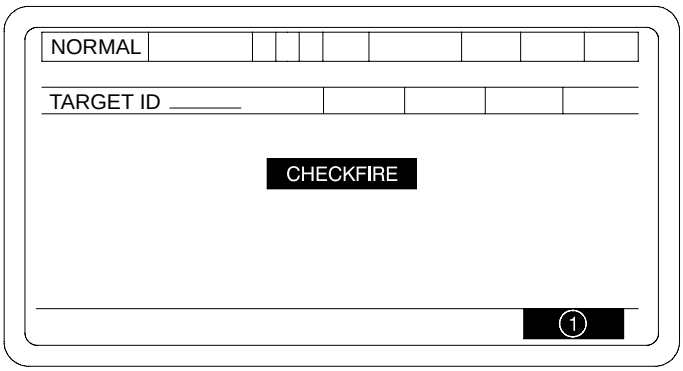


1 EOM = MISSION is direct or manual

ABORT = MISSION is not direct or manual

06pc145t

2-15E.7.4 Stored Targets. The PDFCS can store up to ten targets. These targets can be reviewed for information concerning target number, rounds to be fired, shell, propellant, fuze, and method of control. To access the target summary, perform the following steps:

a. Box in STORED TARGETS on SETUP AND INFORMATION menu and press SELECT key to display a STORED TARGET SUMMARY screen.

b. If there is more than one page, press NEXT PAGE key to display next page.

c. To return to SETUP AND INFORMATION menu, press CANCEL key.

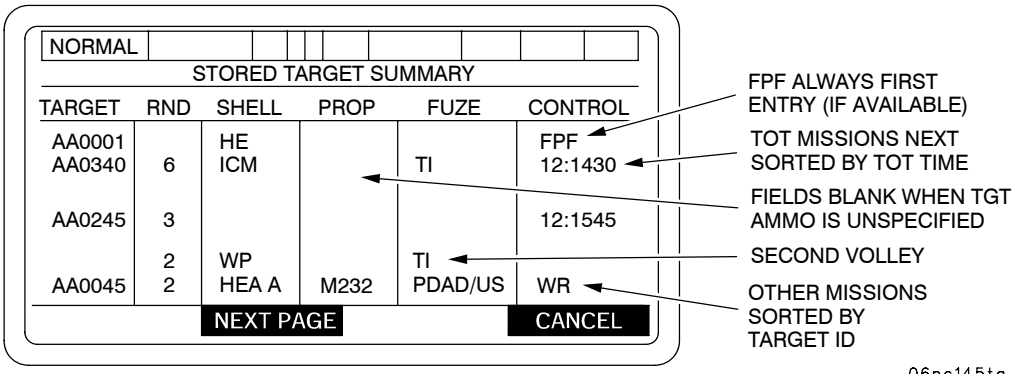


06pc145ta

NEXT PAGE = SHOWS NEXT PAGE. IF LAST PAGE, THEN SHOWS FIRST PAGE. (BLANKED IF ONLY ONE PAGE OR NO TARGETS).

### NOTE

Shell and fuze entries will be blank if the stored mission arrives from the BCS with unspecified ammunition and is not an FPF mission (as shown above in target ID AA0245).

## 2-15E PDFCS FIRE MISSION - CONTINUED

### 2-15E.7 System Menus - Continued

2-15E.7.5 PDFCS STATUS. To display the PDFCS SUBSYSTEM STATUS, proceed as follows:

a. Box in PDFCS STATUS on SETUP AND INFORMATION menu and press SELECT to display the PDFCS STATUS screen.

b. Cursor and select a PDFCS SUBSYSTEM to view the sub-components. The status of each sub-component will be displayed either “OK” or “FAIL”.

c. To return to the SETUP AND INFORMATION menu, press CANCEL key.

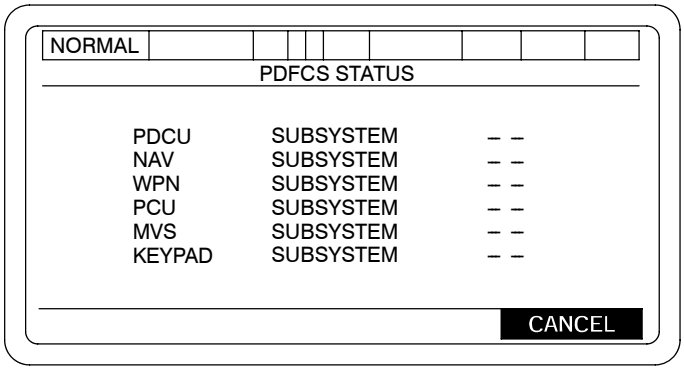


06pc638m

2-15E.7.6 Last Move Orders. To display the last move orders received by the PDFCS, proceed as follows:

a. Box in LAST MOVE ORDERS on SETUP AND INFORMATION menu and press SELECT key. A STEERTO FIRE AREA screen will be displayed showing LAST MOVE ORDERS.

b. Press the EMPLACE key to display an EMPLACE FIRE AREA screen showing LAST MOVE ORDERS.

c. From STEERTO FIRE AREA or EMPLACE FIRE AREA screen, the SETUP AND INFORMATION menu can be reached by pressing the CANCEL key.

**NOTE**

This will not be available after the first Survivability Move.

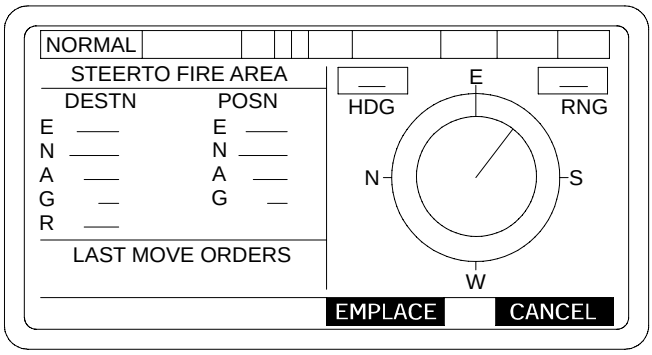


06pc191m

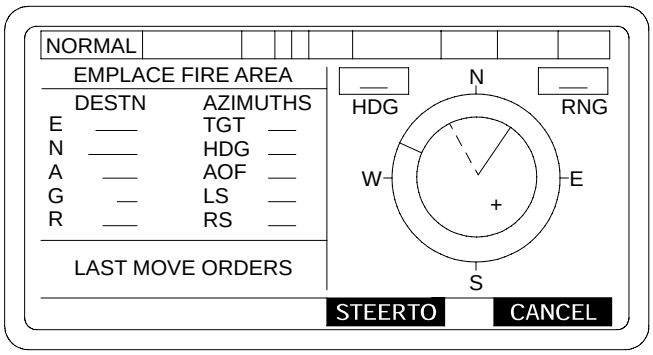


06pc192m

# 2-15E PDFCS FIRE MISSION - CONTINUED

## 2-15E.7 System Menus - Continued

2-15E.7.7 Tube Temperature. The TUBE TEMPERATURE STATUS is shown on the FIRE MISSION screen as COLD, WARM, or HOT; and a time is displayed which indicates how long a complete round may remain in the tube. TUBE TEMPERATURE STATUS can also be displayed as follows:

a. Box in TUBE TEMPERATURE on SETUP AND INFORMATION menu and press SELECT key.

b. A TUBE TEMPERATURE screen will be displayed showing TEMPERATURE STATUS (COLD, WARM, HOT), and SAFE TIME IN TUBE.

c. To return to SETUP AND INFORMATION menu, press CANCEL key.

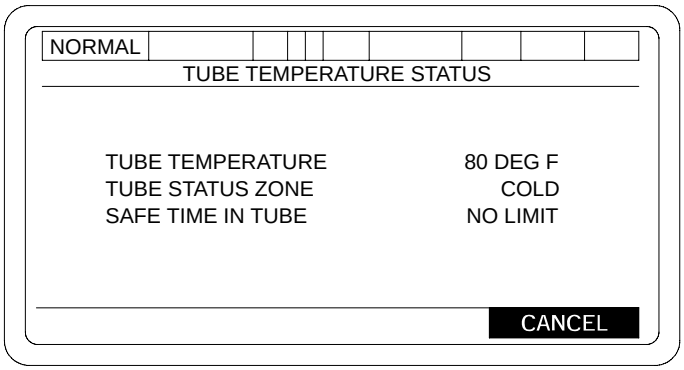


06pc193m

2-15E.7.8 System Restart. To do a SYSTEM RESTART without shutting the system off and powering back-up, proceed as follows:

a. Box in SYSTEM RESTART on SETUP AND INFORMATION menu and press SELECT key. A prompt will be displayed, “ARE YOU SURE”, “YES” or “NO”.

b. The system will restart at a POWER UP STATUS.

c. “INITIALIZATION” must be performed.

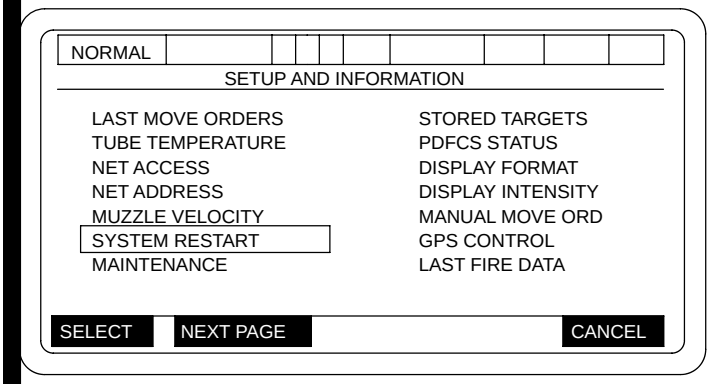


06pc194ma

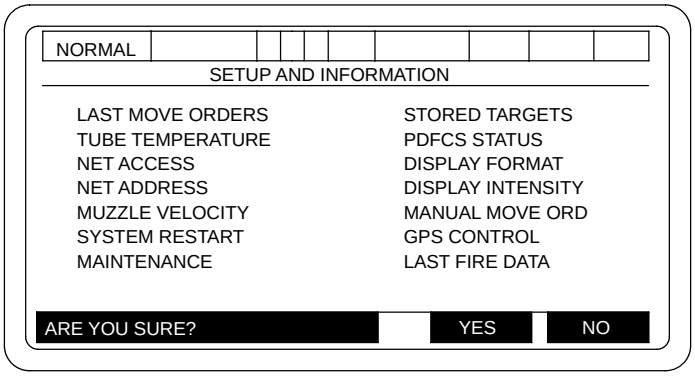


06pc195ma

# 2-15E PDFCS FIRE MISSION - CONTINUED

## 2-15E.7 System Menus - Continued

2-15E.7.9 Display Format. This function is used to change the display of the tube position from AZIMUTH to DEFLECTION, and vice versa; or the TEMPERATURE STATUS display from Fahrenheit to Celsius, and vice versa. This display format is changed as follows:

a. Box in DISPLAY FORMAT on SETUP AND INFORMATION menu and press SELECT key to display a DISPLAY FORMAT screen.

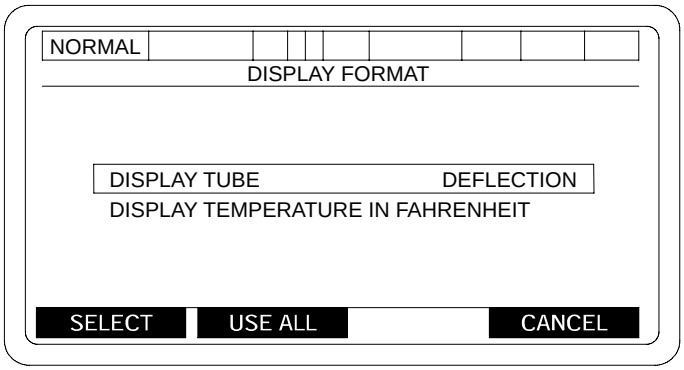


06pc196m

b. To change deflection, box in DISPLAY TUBE DEFLECTION and press SELECT to display another DISPLAY FORMAT screen.

c. This screen asks the question: CHANGE TO AZIMUTH/DEFLECTION? Press the appropriate soft key, YES or NO. This will return the display to the original DISPLAY FORMAT screen.

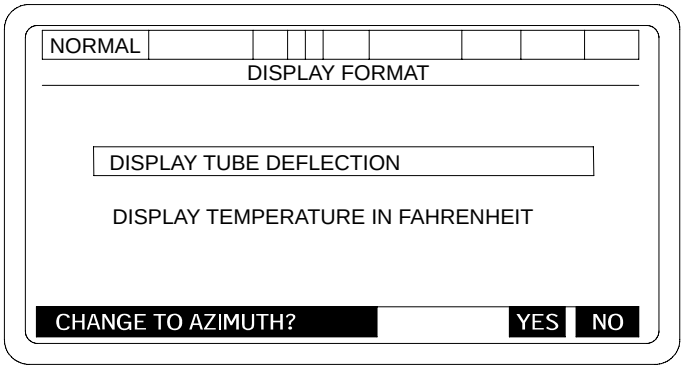


06pc197m

# 2-15E PDFCS FIRE MISSION - CONTINUED

## 2-15E.7 System Menus - Continued

d. To change the temperature display, box in DISPLAY TEMPERATURE IN FAHRENHEIT and press SELECT key to display another DISPLAY FORMAT screen.

e. Answer screen question CHANGE TO CELSIUS/FAHRENHEIT? by pressing appropriate soft key.

f. When original DISPLAY FORMAT screen is displayed, press USE ALL key to return to SETUP AND INFORMATION menu.

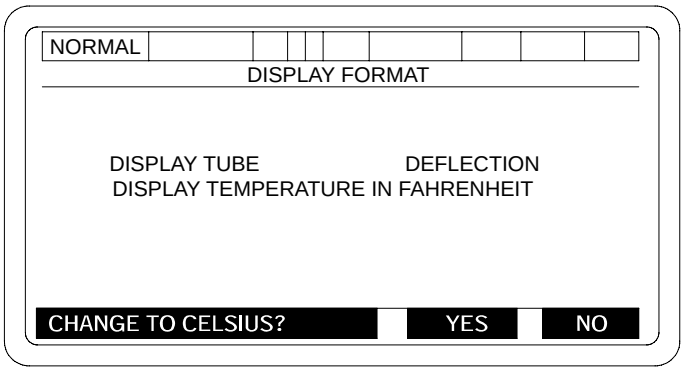


06pc198m

2-15E.7.10 Display Intensity. Display intensity is set using the buttons on the left side of the PDFCS PDU. If DISPLAY INTENSITY on SETUP AND INFORMATION menu is selected, the following screen will be displayed.

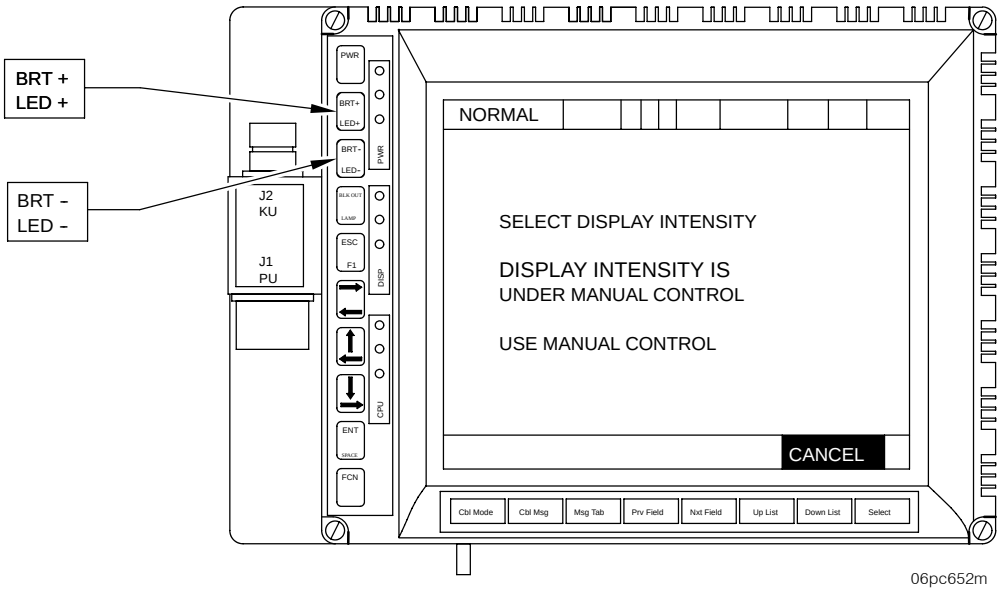


06pc652m

# 2-15E PDFCS FIRE MISSION - CONTINUED

## 2-15E.7 System Menus - Continued

2-15E.7.11 Manual Move Order. When it is necessary to move the howitzer without a move order from the POC, enter the movement data as follows:

a. Box in MANUAL MOVE ORDER on SETUP AND INFORMATION menu and depress SELECT key to display a MANUAL MOVE ORDER ENTRY screen.

b. Enter data by boxing in each data field and then typing in desired data. As each field is filled, press ENT key to enter data.

c. When all data has been entered, press USE ALL key. This will cause the SETUP AND INFORMATION screen to be displayed with MOVE ORD at the top. Press CANCEL key to display the MOVE ORDER screen (STEERTO or EMPLACE).

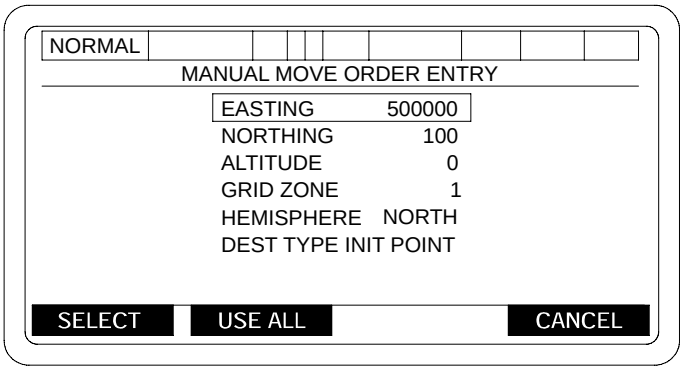


06pc200m

### NOTE

- If the Move Order coordinates are outside the Map Mod, no PDFCS warning message will be issued. All Move Order coordinates should be checked with a map spot, or through some other secondary means to insure they are within the current Map Mod.
- If the Move Order coordinates are in an adjacent Grid Zone, the PDFCS will automatically convert these coordinates to the Map Mod Grid Zone. Once the STEER TO screen is displayed, the entered coordinates will be converted to the Map Mod Grid Zone. If a map spot is performed, the Map Mod Grid Zone will need to be extended into the adjacent Grid Zone.
- If Destination Type is to a FIRING POINT, Operator must input SECTOR OF FIRE prior to inputting a Manual Move Order.

## 2-15E PDFCS FIRE MISSION - CONTINUED

### 2-15E.7 System Menus - Continued

- Destination Types are: LOG POINT (for resupply), INIT POINT (for survey control point) and FIRE POINT.
- If DO NOT MOVE was on the screen before you start this move, the PDFCS will notify BCS that the howitzer is moving.

2-15E.7.12 GPS Control. Used to enhance positioning. The POC will instruct you when to use GPS Control.

**NOTE**

Use according to unit SOP.

a. Select either USE GPS AIDING or USE ONLY CODED GPS DATA.
b. You will receive the following operator prompts.

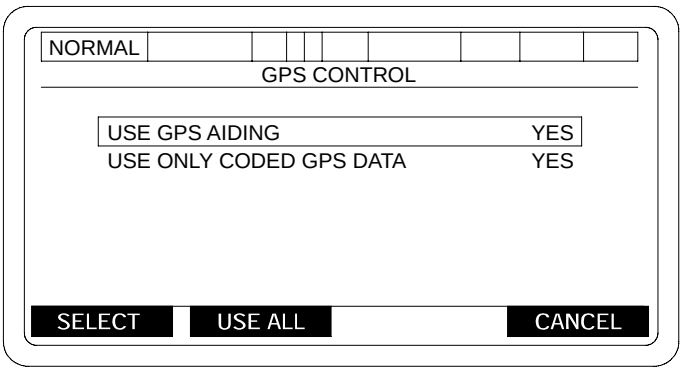


06pc201m

OPERATOR PROMPTS (ON SOFTKEY LINE):

1. WHEN GPS AIDING SELECTED:

| USE GPS AIDING? | YES | NO |
|---|---|---|

2. WHEN USE ONLY CODED GPS DATA SELECTED:

| USE ONLY CODED GPS? | YES | NO |
|---|---|---|

NOTE: VALUES SHOWN ARE SYSTEM SUPPLIED DEFAULTS.

# 2-15E PDFCS FIRE MISSION - CONTINUED

## 2-15E.7 System Menus - Continued

2-15E.7.12.1 Last Firing Data.

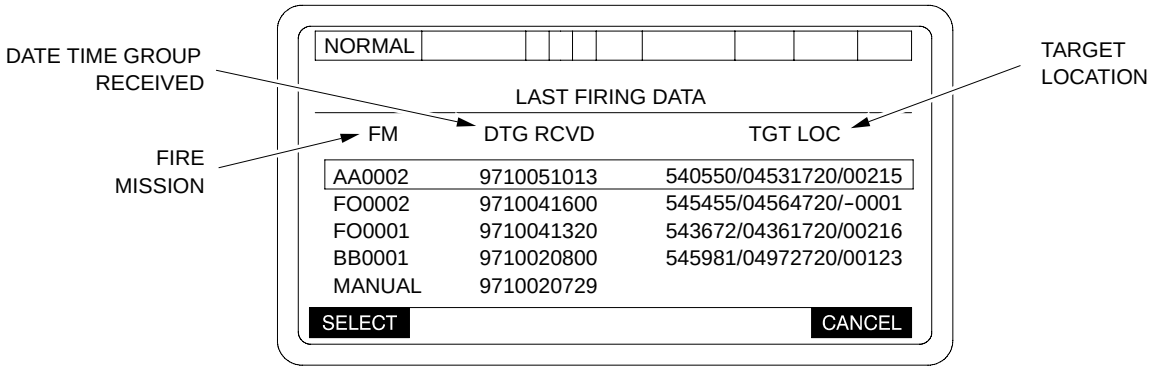


SELECT : View firing data for a particular target

CANCEL : Return to SETUP AND INFORMATION menu

Mission data displayed in order from latest received to earliest

06pc146t

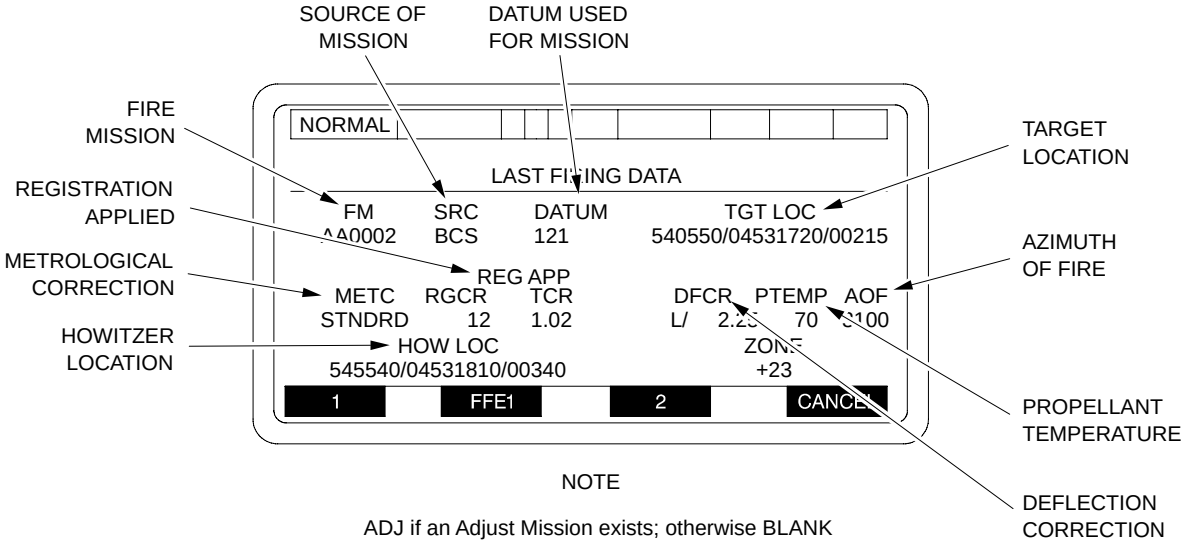


NOTE

ADJ if an Adjust Mission exists; otherwise BLANK
If ADJ, pressing softkey allows view of pre-shot data for ADJUST phase.

FFE2 if an FFE2 Mission exists; otherwise BLANK
If FFE2, pressing softkey allows view of pre-shot data for FFE2 phase.

FFE1 : View pre-shot data for FFE1 phase

CANCEL : Return to LAST FIRING DATA menu

06pc147t

# 2-15E PDFCS FIRE MISSION - CONTINUED

## 2-15E.7 System Menus - Continued

2-15E.7.12.1 Last Firing Data - Continued

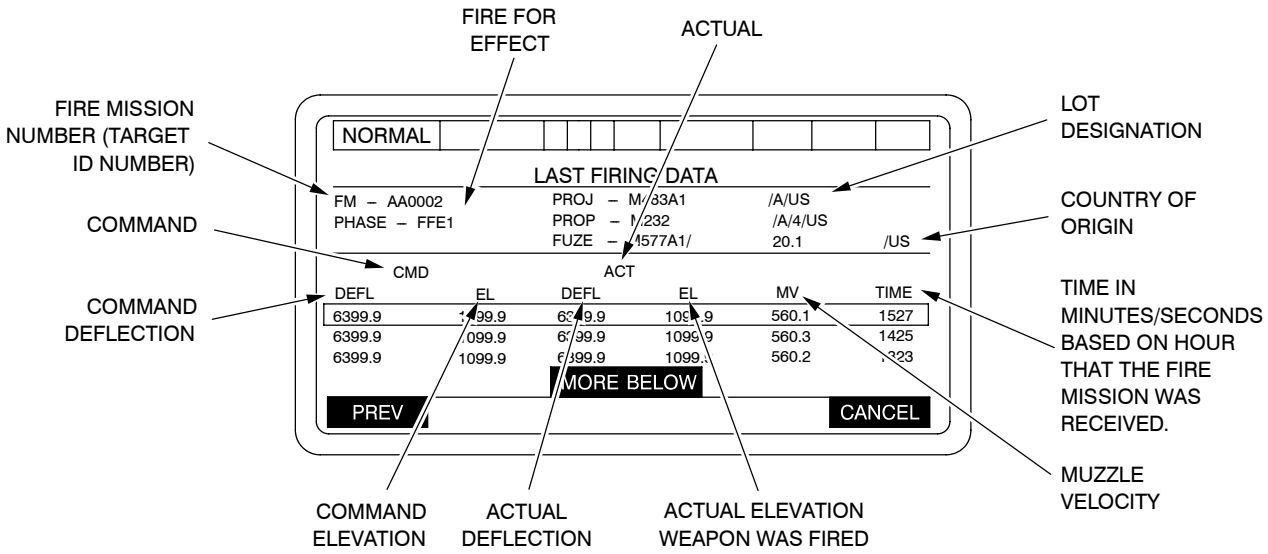


PREV : Returns previous screen for viewing pre-shot data of different phase

CANCEL : Return to LAST FIRING DATA menu

06pc148ta

### NOTE

If more than four shots exist for a particular phase, three will initially be displayed and scrolling will be enabled. As the cursor is scrolled below the first three, two will be displayed, MORE ABOVE will appear on top of the shot data, and MORE BELOW will appear below the shot data.

2-15E.7.13 Muzzle Velocity. For more accurate firing data when computing ballistics, measured muzzle velocities are entered into the PDFCS. Also, muzzle velocities can be entered as they are measured. This is performed as followed:

### WARNING

Ensure that correct propellant temperature and shell weights are entered in PDFCS. Failure to comply will result in incorrect ballistic computations. This could result in injury or death to friendly troops.

# 2-15E PDFCS FIRE MISSION - CONTINUED

## 2-15E.7 System Menus - Continued

2-15E.7.13 Muzzle Velocity - Continued

a. Box in MUZZLE VELOCITY on SETUP AND INFORMATION menu and press SELECT key to display a MUZZLE VELOCITY screen.

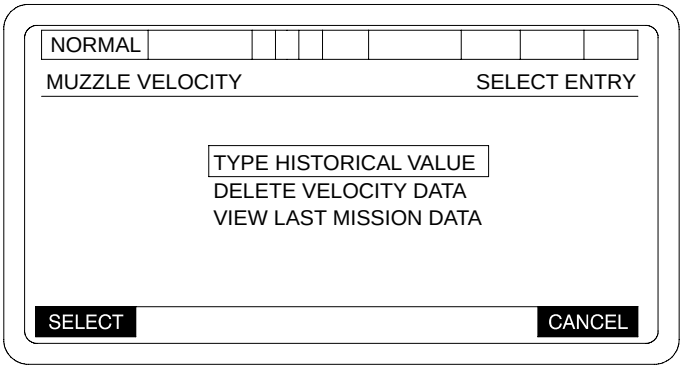


06pc149t

**NOTE**

Data displayed (PROP TYPE, CHG, SHELL TYPE/LOT, VEL) will be last entered data or default data.

b. To enter muzzle velocities as they are measured, box in TYPE HISTORICAL VALUE and press SELECT key to display a MUZZLE VELOCITY screen showing PROP/CHG TYPE.

**NOTE**

The data displayed on the third line of this display is updated as entries are made.

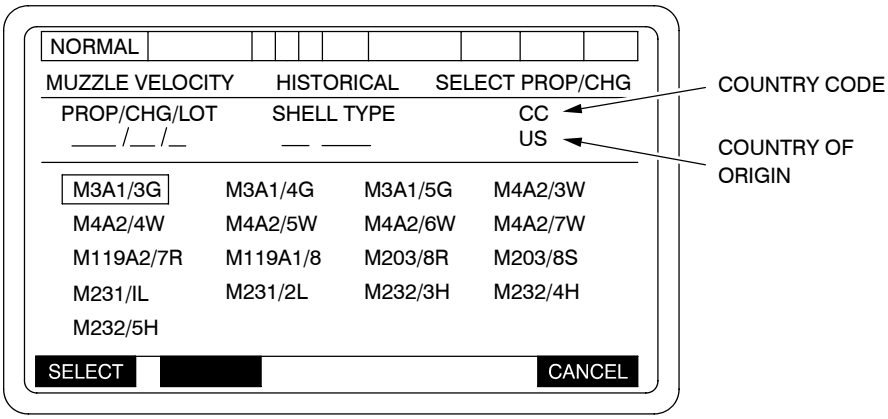


06pc150ta

# 2-15E PDFCS FIRE MISSION - CONTINUED

## 2-15E.7 System Menus - Continued

2-15E.7.13 Muzzle Velocity - Continued

c. Box in PROP/CHG TYPE and press SELECT key. Type selection will be displayed under PROP/CHG TYPE.

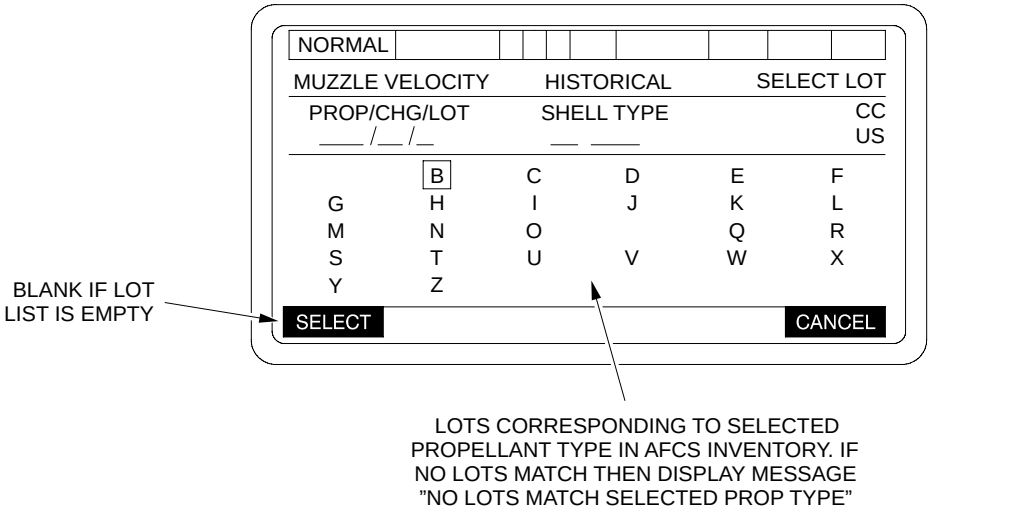


SELECT : Will return to MUZZLE VELOCITY SELECT SHELL display

CANCEL : Will return to DISPLAY MUZZLE VELOCITY SELECT PROP LOT display

06pc152t

d. Box in PROP/LOT and press SELECT. This will select the chosen LOT DESIGNATOR and display the HISTORICAL SHELL TYPE menu.

e. Select charge, SHELL TYPE/LOT in the same manner as PROP/CHG TYPE. Press CANCEL at any time to return the display to the previous item worked.

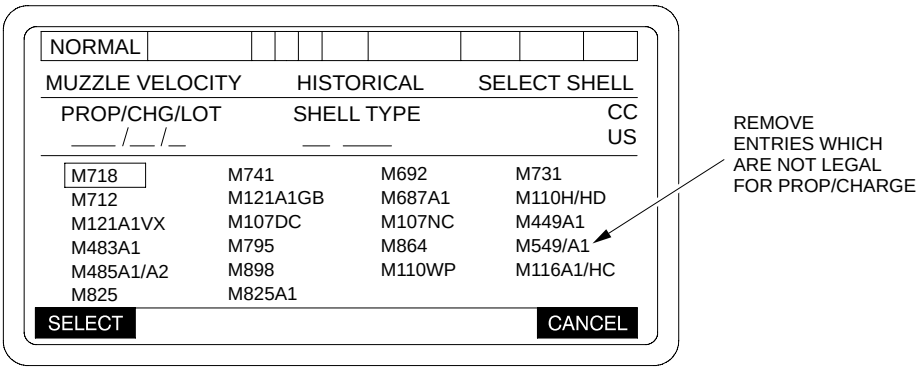


CANCEL : Return to DISPLAY MUZZLE VELOCITY SELECT PROP LOT display

SELECT : Will return to MUZZLE VELOCITY ENTER VELOCITY display

06pc151t

# 2-15E PDFCS FIRE MISSION - CONTINUED

## 2-15E.7 System Menus - Continued

2-15E.7.13 Muzzle Velocity - Continued

e. Enter VELOCITY by typing in measured velocity and pressing ENT key. This will also return the display to the SETUP AND INFORMATION menu.

f. The muzzle velocities entered as historical are the average velocities calculated during calibration.

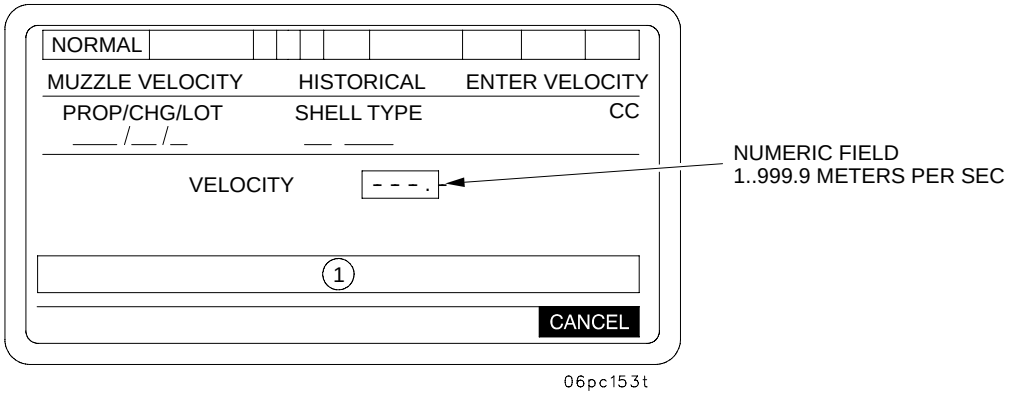


1 WHEN VELOCITY SELECTED OR WHEN NO PROP TEMP ENTRY ALLOWED:

TYPE VELOCITY IN M/S
-PRESS ENT KEY-

### NOTE

- If MVV table is full or if more than two entries for a given projectile family/propellant combination are attempted, then a short error message "ERROR-SHELL/PROP LIMIT" will be generated.
- If the computed velocity variance is outside legal limits, then a short error message "ILLEGAL VELOCITY VALUE" will be generated.

# 2-15E PDFCS FIRE MISSION - CONTINUED

## 2-15E.7 System Menus - Continued

2-15E.7.13 Muzzle Velocity - Continued

g. To delete muzzle velocities, box in DELETE VELOCITY DATA from the Muzzle Velocity screen.

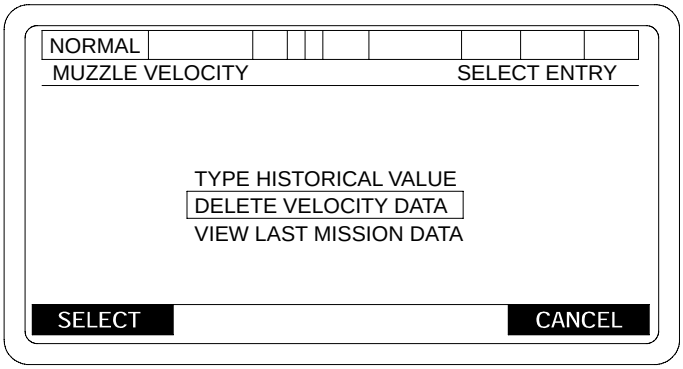


06pc207m

h. To delete muzzle velocity by propellant lot, box in DELETE BY PROPELLANT LOT and press SELECT.

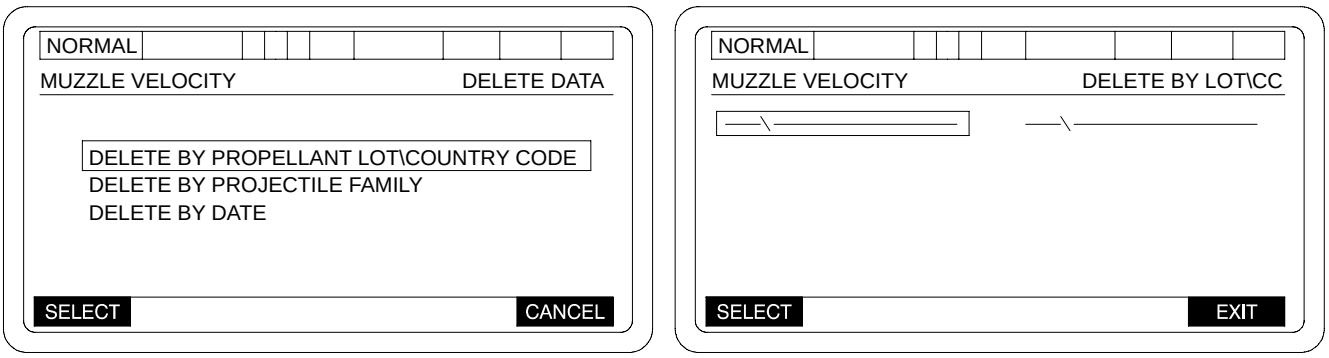


06pc154t

Lots are displayed only for those propellants not used in the current ammunition inventory. When SELECT key is pressed, a short error message “DELETE VELOCITY DATA” “YES” “NO” will be shown and CANCEL will be displayed on initial entry. EXIT will be displayed once a lot has been deleted. Selecting YES causes the velocity data for the selected propellant lot to be deleted. Selecting NO allows re-selection of a propellant family. When data is being retrieved and sorted you will receive the following message:

“RETRIEVING LIST PLEASE WAIT”

If no lots are available for deletion, the SELECT key will be blanked. You will have a CANCEL at soft key 4 and the message “NO LOTS TO DELETE” will be displayed.

# 2-15E PDFCS FIRE MISSION - CONTINUED

## 2-15E.7 System Menus - Continued

2-15E.7.13 Muzzle Velocity - Continued

i. To delete muzzle velocity by projectile family, box in DELETE BY PROJECTILE FAMILY and press SELECT.

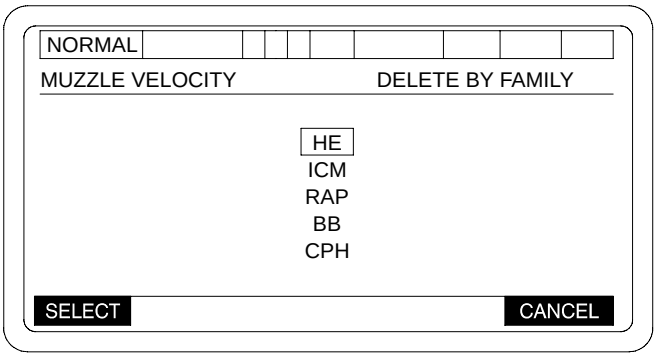


06pc155t

When the SELECT key is pressed, a short error message "DELETE VELOCITY DATA" "YES" "NO" will be shown and CANCEL will be displayed. Selecting YES causes the velocity data to be deleted. Selecting NO allows re-selection. EXIT will be displayed once a projectile family has been deleted.

All family selections shall be displayed on initial entry to this menu. Once a family has been deleted, its selection entry is removed from the menu.

j. To delete muzzle velocity by the date box in DELETE BY DATE and press SELECT.

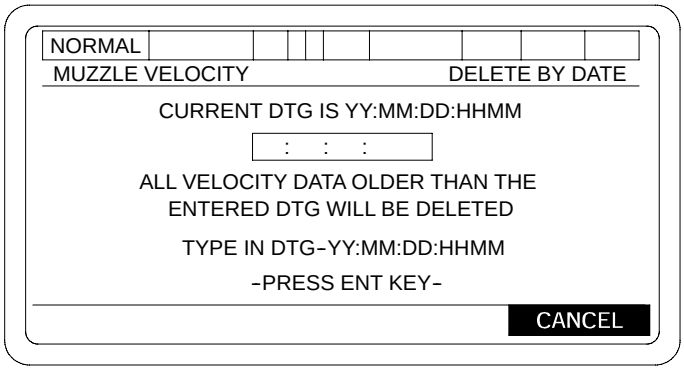


06pc211m

**NOTE**

When ENTER key is pressed, a validity check is performed on the entered Date/Time. If the Date/Time data is invalid, you will receive a short error message: "INVALID DATE/TIME DATA" "ACK" You will be required to enter a new Date/Time value. If the Date/Time data is valid, you will receive a short error message: "DELETE VELOCITY DATA" "YES" "NO". YES causes all velocity data older than the entered DTG to be deleted. NO allows re-entry of the DTG.

# 2-15E PDFCS FIRE MISSION - CONTINUED

## 2-15E.7 System Menus - Continued

2-15E.7.13 Muzzle Velocity - Continued

k. To view last mission velocity data, box in VIEW LAST MISSION DATA from the Muzzle Velocity screen.

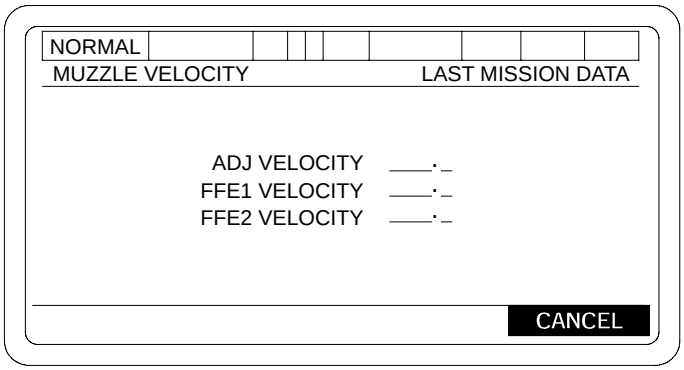


06pc212m

2-15E.7.14 Muzzle Velocity Variance (MVV).

To set the number of rounds that will be used in calculating muzzle velocity variances, select the MVV ROUNDS from the SETUP AND INFORMATION screen.

NOTE: 1. The entry field will display the current MVV rounds selected and will default to 4 on systems initialization.

2. To use the MVV, you must have an extended lot code in the PDFCS inventory.

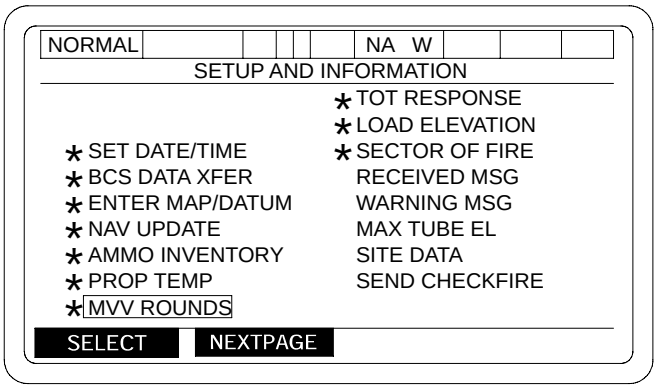


06pc611m

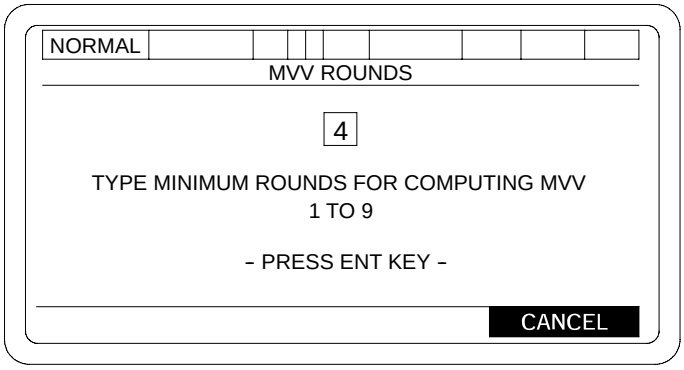


06pc610m

# 2-15E PDFCS FIRE MISSION - CONTINUED

## 2-15E.7 System Menus - Continued

2-15E.7.15 Operational Maintenance Transition.

The PDFCS will provide the capability for the PDFCS operator to transition from NORMAL OPERATIONAL MODE functions to MAINTENANCE MODE functions and back to NORMAL OPERATIONAL MODE without having to POWER DOWN, perform SYSTEM RESTART, or perform NORMAL OPERATIONAL MODE initialization procedures. This capability will only be available when the PDFCS has successfully completed a NORMAL OPERATIONAL MODE initialization. Selection of the MAINTENANCE MODE from the PDFCS MODE SELECTION display will not allow the PDFCS operator to transition to NORMAL OPERATIONAL MODE without first having to POWER DOWN, perform SYSTEM RESTART, or do a NORMAL OPERATIONAL MODE "INITIALIZATION" procedure.

When MAINTENANCE MODE functions are selected from the PDFCS NORMAL OPERATIONAL MODE, the PDCU will be directed to limit instructive testing to only respond to Fire Mission requests. When MAINTENANCE MODE is entered from the PDFCS SELECT OPERATIONAL MODE display, the PDCU will be allowed to perform its full range of intrusive tests.

If a Fire Mission is received while the PDFCS is in a MAINTENANCE MODE function which was activated from the NORMAL OPERATIONAL MODE, the operator will be prompted to either accept or reject the mission. NORMAL OPERATIONAL acceptance of the mission will automatically terminate all MAINTENANCE MODE function activity and transition to NORMAL OPERATIONAL MODE Fire Mission processing. Operator rejection of the mission will cause an operator ABORT of the Fire Mission and will cause the PDFCS to remain in the currently active MAINTENANCE MODE function.

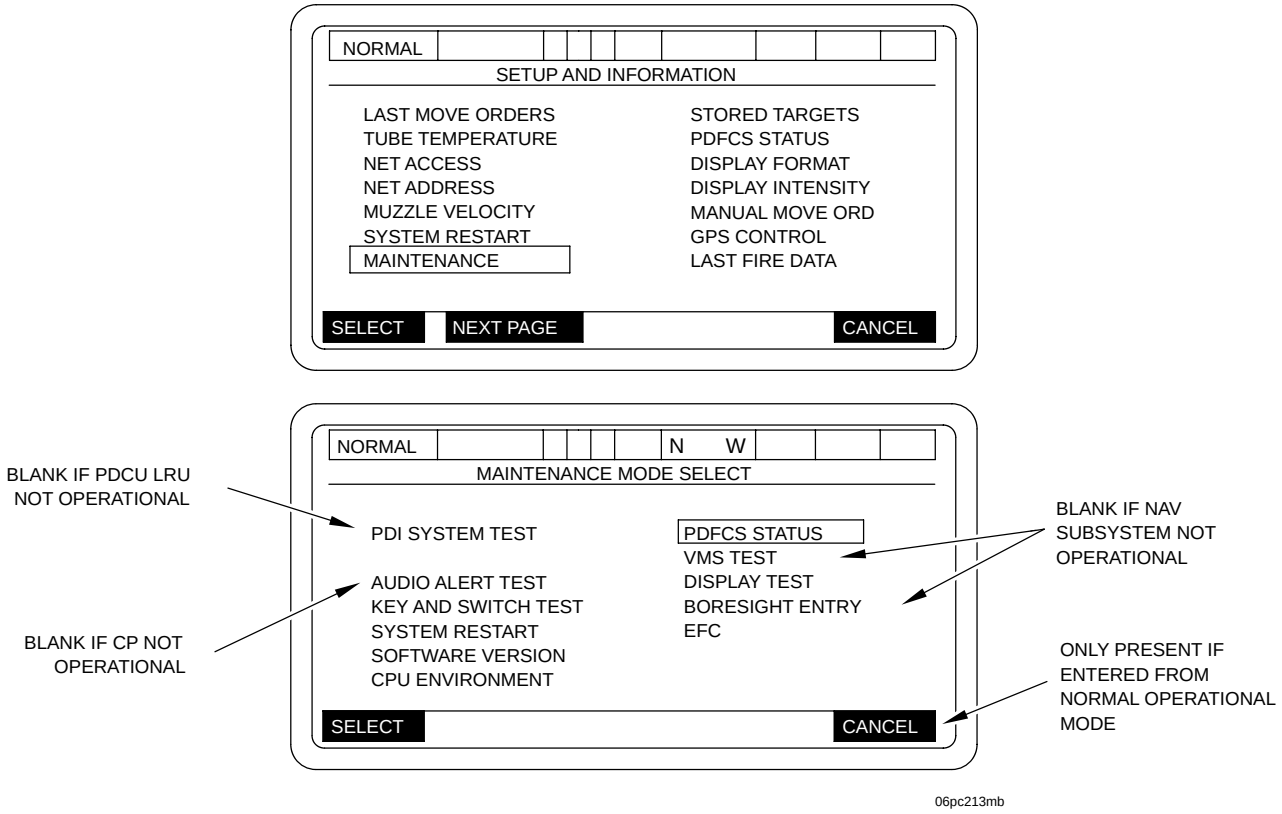

## 2-16 PREPARATION FOR FIRING.

**NOTE**

- In the event of a failure of the AFCS/PDFCS, the crew should immediately revert to the optical fire control procedures. For this reason, optical fire control equipment is installed or emplaced as time permits.
- If the AFCS/PDFCS failure occurs after the howitzer has been properly oriented, the PANTEL, collimator, or a distant aiming point is used to lay for direction during indirect fire missions.

### 2-16.1 Emplacing Howitzer.

a. Chief of section commands “PREPARE FOR ACTION” and supervises work of all crewmembers during emplacement. Directs placement of ARV, if required.

**NOTE**

- Spades must be used when firing mated to ARV.
- Spades should be used when firing off loose, sandy or muddy soils. Spades need not be used when firing off hard surfaces. Chief of section must decide if spades are to be deployed.
- Once emplaced, howitzer can be fired in any direction. However, it is recommended that vehicle be moved off spades before firing to left or right side of vehicle.

b. Gunner depresses right and left spade pedal (1) and opens left cab door.

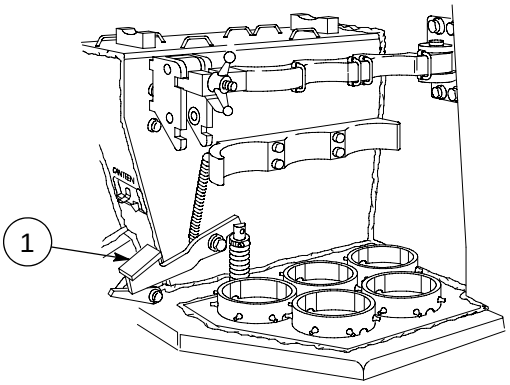

## 2-16 PREPARATION FOR FIRING - CONTINUED

### 2-16.1 Emplacing Howitzer - Continued

c. Cannoneer opens hull door, dismounts, and holds door open. Chief of section dismounts and cannoneer closes hull door.

d. Cannoneer lowers left and right spades as follows:

(1) Pull strut (2) loose from spade (3).

(2) Remove safety pin (4).

(3) Release locking latch (5).

(4) Lower spade (3) to ground.

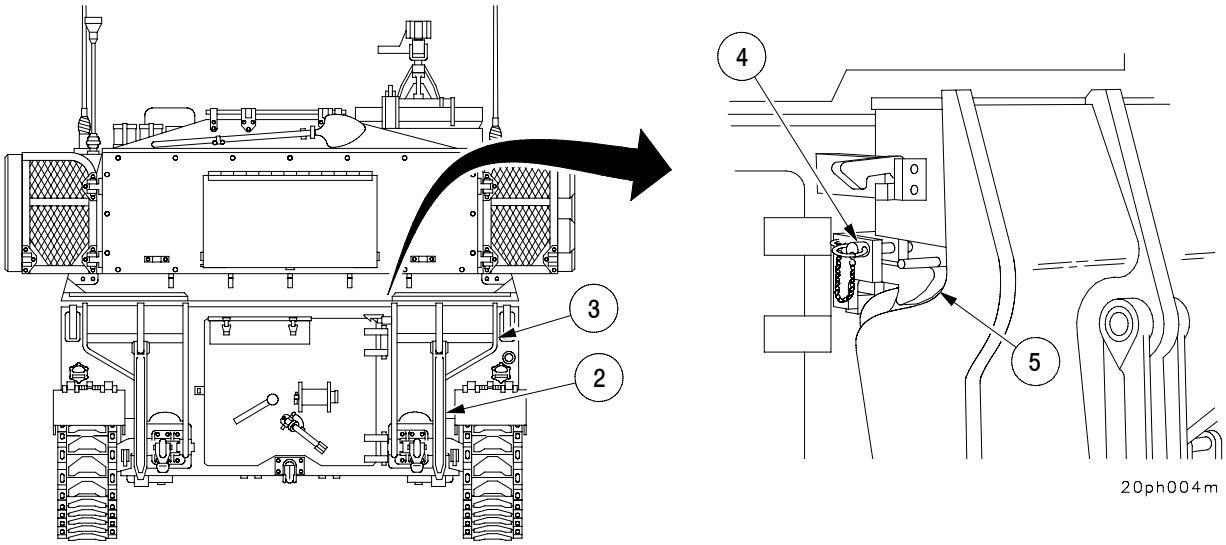


**WARNING**

When backing vehicle for emplacement or any other reason, two personnel must guide driver.

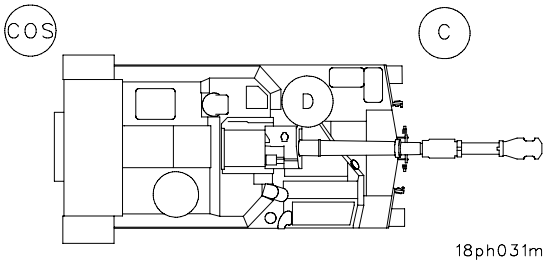


e. Standing to rear and left of howitzer, the chief of section signals cannoneer on safe backing direction and distance. Cannoneer, standing to left front of vehicle, relays backing directions to driver until spades (3) are emplaced.

# 2-16 PREPARATION FOR FIRING - CONTINUED

## 2-16.1 Emplacing Howitzer - Continued

f. Chief of section checks spade struts (2) to make sure they are in socket (6).

g. Gunner depresses left and right spade pedal latch (7) to lock struts (2) into sockets (6).

h. Driver, when directed by chief of section, locks howitzer brakes and follows prescribed shutdown procedures. However, if hydraulic power will be used to elevate and traverse the tube, the engine should be left running.

i. Howitzer driver passes portable instrument panel (8) to gunner who secures panel in bracket (9) provided. Driver stows wiring harness in hooks over driver's passageway as directed by chief of section.

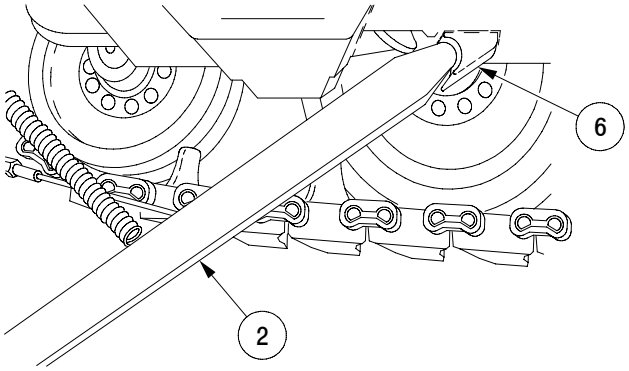


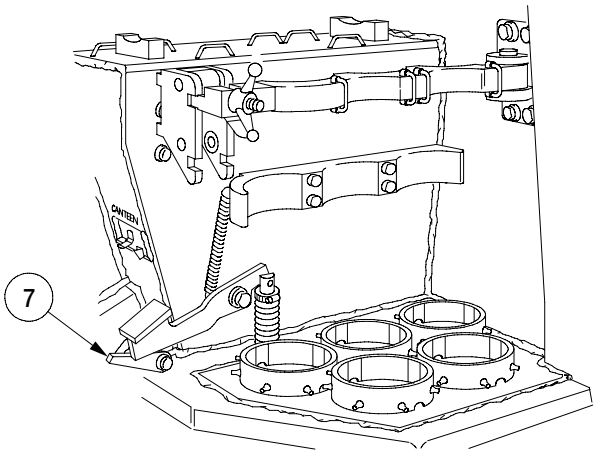


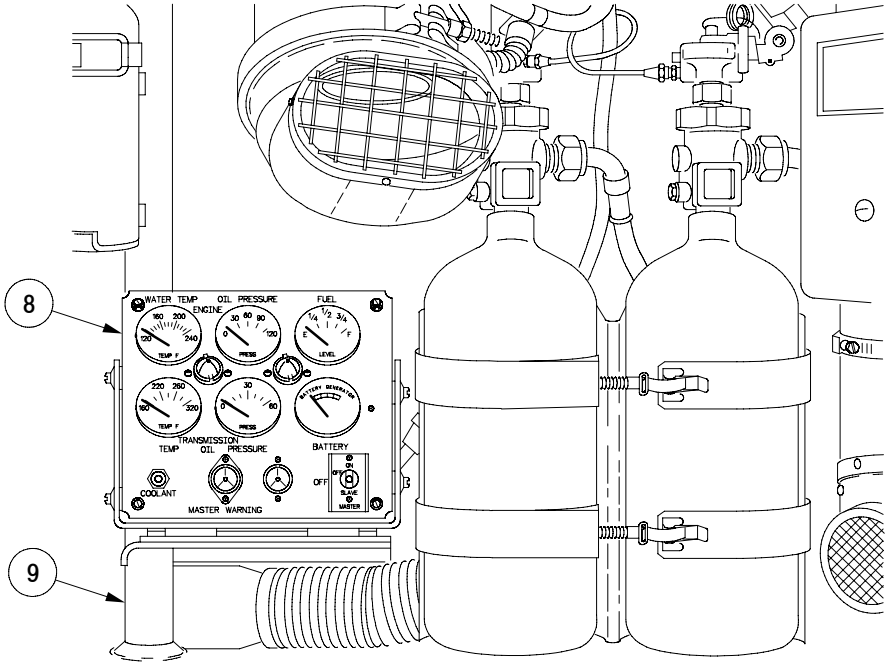


18ph042m

## 2-16 PREPARATION FOR FIRING - CONTINUED

### 2-16.1 Emplacing Howitzer - Continued

j. Driver disengages travel lock (para 2-8.19).

k. On driver's command, chief of section places HYDRAULIC POWER switch to ON position and elevates tube (para 2-8.21.4).

l. After driver lowers and secures travel lock, chief of section depresses tube and places Elevate Control switch in GUNNER position.

m. Cannoneer removes muzzle cover.

n. Gunner removes collimator and hands it to cannoneer.

o. Cannoneer obtains collimator from gunner and places it to left of howitzer.

p. Gunner releases cab traverse lock, and chief of section places TRAVERSE CONTROL switch in POWER or HANDWHEEL position as desired.

q. Driver removes rammer staff sections.

r. Gunner checks functioning of elevation system (para 2-8.21.4).

s. Cannoneer performs Before Firing checks (PMCS Table 2-1) on rammer and breech. He gets lanyard and vent cleaning tool.

t. Cannoneer gets swab and bucket of water and fastens bucket to floor.

u. Cannoneer gets primers and places them in his primer belt.

### 2-16.2 Laying Howitzer Using M2 Aiming Circle.

**NOTE**

Gunner uses M117A2 PANTEL to lay howitzer for direction only when the AFCS/PDFCS has malfunctioned.

a. Upon command, "BATTERY ADJUST AIMING POINT THIS INSTRUMENT," gunner lifts door (1) on azimuth counter (2) of PANTEL (3).

b. Gunner ensures pitch-level vial (4) and cross-level vial (5) bubbles on M145A1 mount (6) are centered and gunner's aid zero correction counter (7) is set at ZERO.

c. Gunner sets 300 mils on the elevation counter (8) on the M145A1 mount (6), then depresses or elevates tube until quadrant elevation-level vial (9) bubble centers. Ensure that elevation-level vial (9), cross-level vial (5), and pitch-level vial (4) bubbles are centered throughout laying process.

d. Sighting through PANTEL (3), gunner rotates head by turning azimuth deflection knob (10) until PANTEL vertical hairline is centered on reflector of aiming circle. Horizontal crosshair alignment is obtained by turning elevation knob (11).

## 2-16 PREPARATION FOR FIRING - CONTINUED

### 2-16.2 Laying Howitzer Using M2 Aiming Circle - Continued

e. When PANTEL crosshairs are aligned on aiming circle and all bubbles are level, gunner announces to gunnery sergeant, “NUMBER (SO AND SO), AIMING POINT IDENTIFIED.”

f. Gunnery sergeant determines azimuth reading to howitzer and announces, “NUMBER (SO AND SO), DEFLECTION (SO MUCH).”

g. Upon announcement of deflection, gunner repeats deflection by announcing, “NUMBER (SO AND SO), DEFLECTION (SO MUCH),” and rotates azimuth deflection knob (10) until announced deflection appears on azimuth counter (2).

h. Operating traversing mechanism and sighting through PANTEL, gunner traverses weapon until PANTEL crosshairs are centered on reflector of aiming circle, making sure pitch-level vial (4), cross-level vial (5), and elevation level vial (9) bubbles are centered.

i. Gunner announces to gunnery sergeant, “NUMBER (SO AND SO), READY FOR RECHECK.”

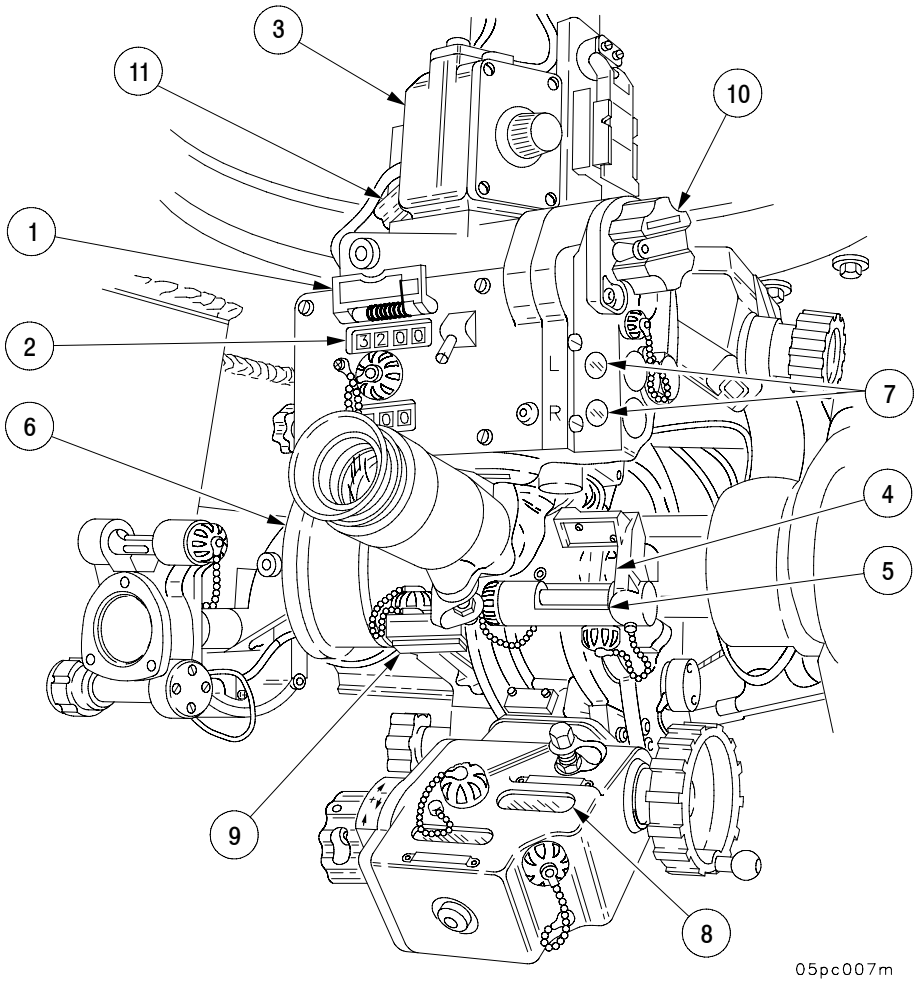

## 2-16 PREPARATION FOR FIRING - CONTINUED

### 2-16.2 Laying Howitzer Using M2 Aiming Circle - Continued

j. Gunnery sergeant determines a new azimuth reading to howitzer and announces, “NUMBER (SO AND SO), DEFLECTION (SO MUCH).”

k. Upon announcement of new deflection, gunner repeats deflection and difference between new deflection reading and reading on azimuth counter (2) to gunnery sergeant by saying, “NUMBER (SO AND SO), DEFLECTION (SO MUCH), (SO MANY) MILS.”

l. Gunner rotates azimuth deflection knob (10) until new deflection appears on azimuth counter (2).

m. Operating traversing mechanism and sighting through PANTEL, gunner traverses the weapon until PANTEL crosshairs are centered on reflector of aiming circle with mount pitch-level vial (4), cross-level vial (5), and elevation level vial (9) bubbles centered.

n. Gunnery sergeant and gunner repeat recheck steps g thru m until difference between azimuth reading to PANTEL and reading on PANTEL azimuth counter (2) is zero mils. Gunnery sergeant then announces, “NUMBER (SO AND SO) IS LAID.”

o. Upon the command, “LAID”, gunner records value appearing on azimuth counter (2). The tube is now oriented for direction and will not be traversed until aiming point is established.

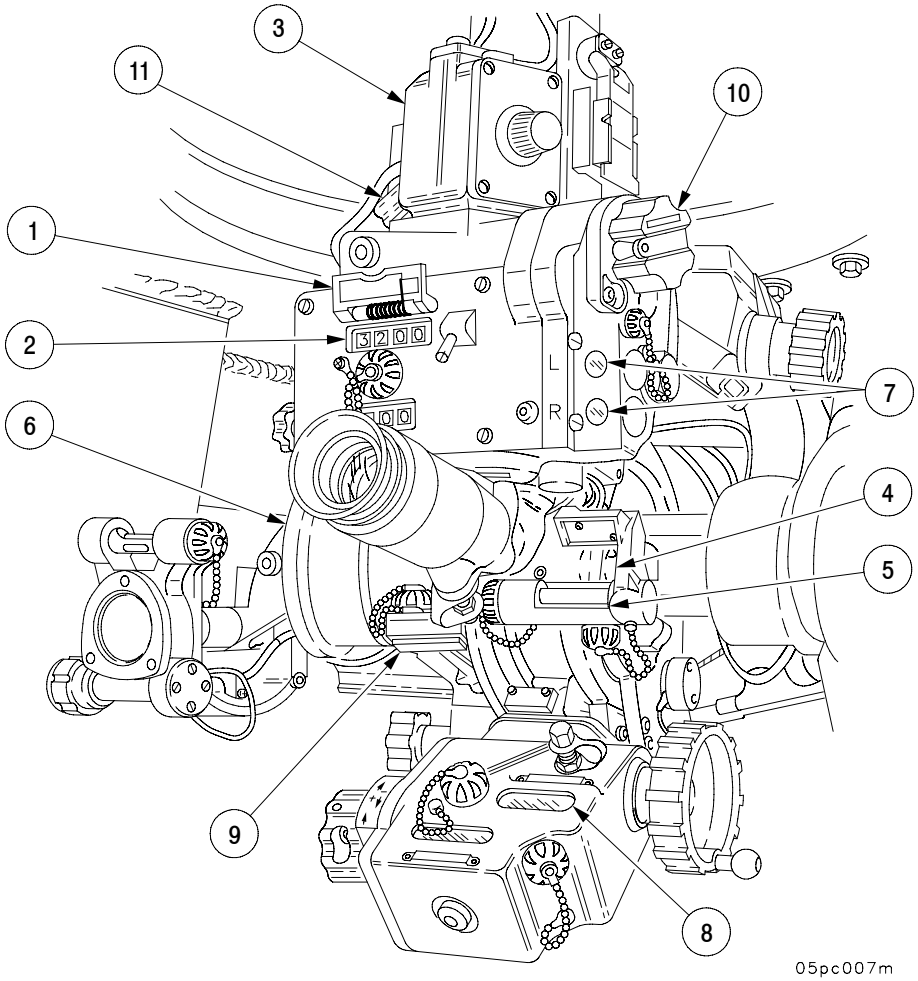

## 2-16 PREPARATION FOR FIRING - CONTINUED

### 2-16.3 Emplacing Infinity Aiming Reference Collimator M1A1/M1A2.

**WARNING**

**RADIATION** **HAZARD**

**TRITIUM GAS (H3)**

The M1A1 collimator is radioactively illuminated and should be checked before using for illumination in low-light environment. If no illumination occurs, notify local radiation safety officer. Do not attempt to repair.

**NOTE**

- Immediately following alignment and laying operations, emplace M1A1/M1A2 collimator for use in case AFCS/PDFCS fails.
- The M1A1/M1A2 collimator should be emplaced in a concealed position. Placing M1A1/M1A2 collimator between 2400 and 2800 mils minimizes displacement. Emplacement distance away from weapon varies due to type of terrain encountered, but must be within a minimum of 4 meters and a maximum of 15 meters. Optimum distance is between 5 and 12 meters. The M1A1/M1A2 collimator should be emplaced no more than 4 meters above or below PANTEL.

## 2-16 PREPARATION FOR FIRING - CONTINUED

### 2-16.3 Emplacing Infinity Aiming Reference Collimator M1A1/M1A2 - Continued

a. Under directions from gunner, M1A1/M1A2 collimator (1) is emplaced by cannoneer as follows:

(1) Unfasten strap (2) which retains tripod legs.

(2) Rotate tripod legs to down position and set each leg firmly into ground with one leg pointed toward PANTEL.

(3) Extend tripod legs as necessary. Lock by tightening locking knob (3).

(4) Release three latches (4) from cover (5) and remove cover (5) from tripod base. Place cover underneath collimator, closed end pointing to weapon muzzle.

(5) Make sure azimuth adjustment is in center of traversing range by operating the azimuth adjustment knob (6).

(6) Loosen azimuth clamping knob (7), elevation clamping knob (8), and cross-level clamping knob (9).

(7) Unfasten straps (10). Rotate M1A1/M1A2 collimator (1) to horizontal position and refasten straps (10).

**NOTE**

M1A2 only has an on/off switch for the light sequence.

(7.1) Turn switch (10.1) ON.

(8) Sighting down front and rear sights (11), rough lay M1A1/M1A2 collimator (1) on pantel objective lens. Tighten azimuth clamping knob (7) and elevation clamping knob (8).

(9) Center cross-level vial bubble (12). Tighten cross-level clamping knob (9).

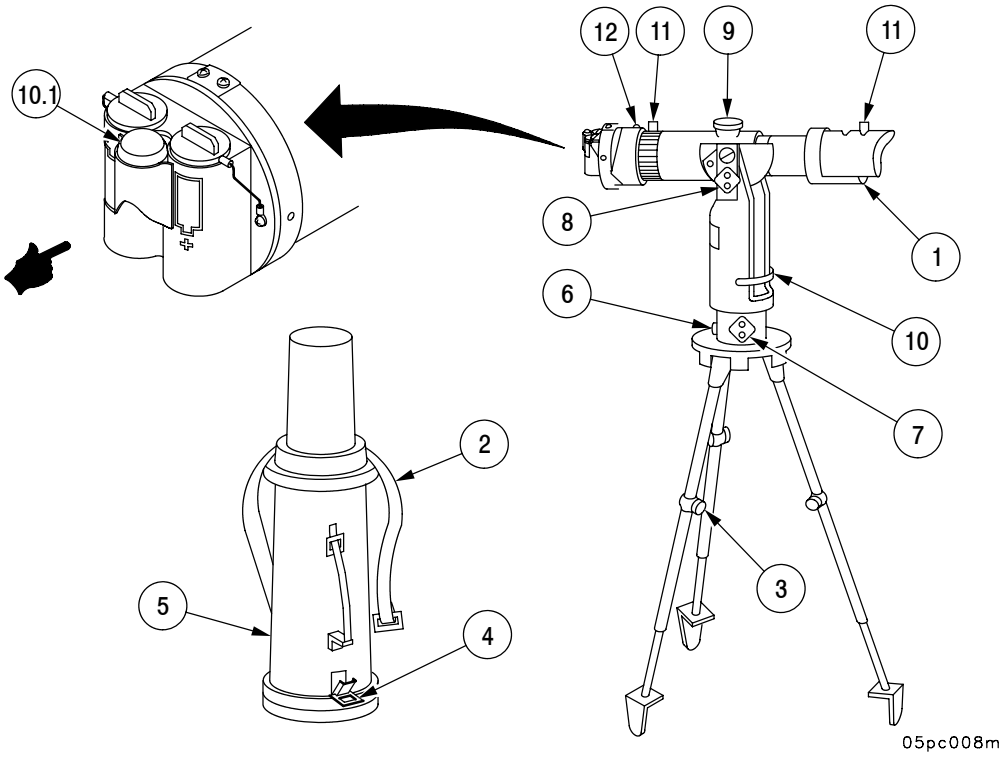

## 2-16 PREPARATION FOR FIRING - CONTINUED

### 2-16.3 Emplacing Infinity Aiming Reference Collimator M1A1/M1A2 - Continued

b. Sighting through PANTEL eyepiece, gunner rotates azimuth deflection knob (13) until M1A1/M1A2 collimator is sighted.

c. Sighting through PANTEL, gunner commands cannoneer to rotate M1A1/M1A2 collimator azimuth adjustment knob (6) until PANTEL crosshairs (14) are centered with M1A1/M1A2 collimator reticle crosshairs (15). He then motions cannoneer in.

d. Gunner records value appearing on his azimuth counter (16) and closes door (17).

e. Gunner rotates reset counter (18) on PANTEL until 3200 appears on reset counter (19).

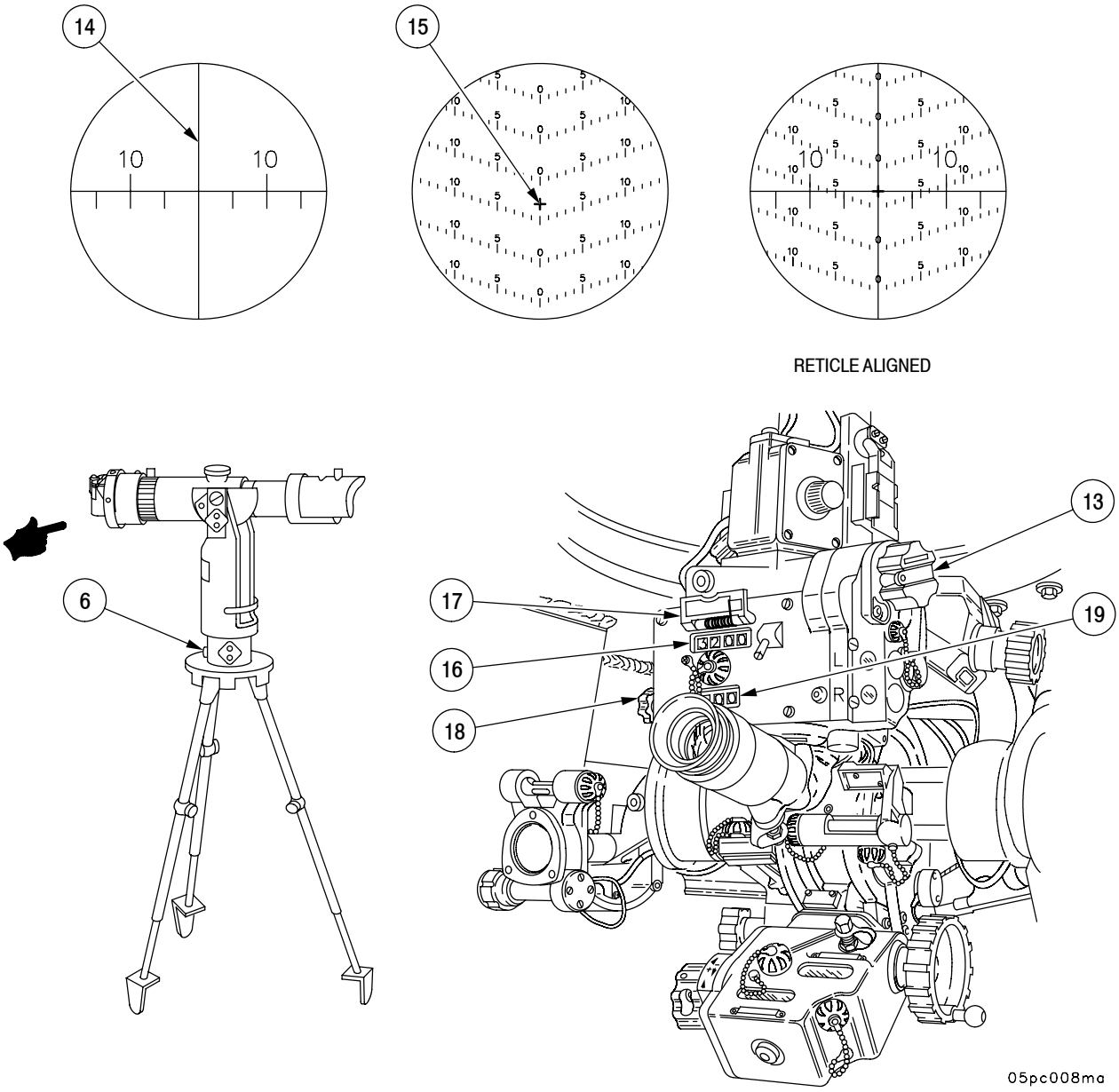

## 2-16 PREPARATION FOR FIRING - CONTINUED

### 2-16.4 Measuring Site to Crest.

**WARNING**

Site to Crest information must be entered in AFCS/PDFCS or transmitted to POC/BCS. Failure to enter or send this information will result in an incorrect ballistic computation. This could cause injury or death to friendly troops.

**NOTE**

Make sure you have established your aiming points.

a. To measure deflection, gunner levels cross and pitch-level vial bubbles, turns head of telescope to collimator, and records deflection from azimuth counter reset scale.

b. Chief of section selects highest crest in his sector of fire.

c. Chief of section sights along bottom part of tube.

d. Chief of section directs gunner to traverse and elevate tube until bottom of tube just clears crest.

e. Gunner measures elevation using one of the following methods:

**NOTE**

Gunner's quadrant may also be used for measurement of site to crest.

(1) Chief of section directs gunner to center elevation level vial and read elevation counter.

(2) Reads quadrant off of quadrant elevation scale, records this reading, and estimates range to crest (gunner's quadrant may also be used).

(3) Reports quadrant and estimated range to platoon leader, "SIR, NUMBER (SO AND SO) SITE TO CREST (SO MUCH) AT (SO MUCH) RANGE."

f. Chief of section may have gunner measure and record deflection to crest if AFCS/PDFCS is not operating.

g. Reports site data to POC.

## 2-16 PREPARATION FOR FIRING - CONTINUED

### 2-16.5 Boresighting-Preliminary Procedure.

a. Make sure howitzer is no more than 90 mils cant.

b. Remove firing mechanism (1) from breech.

c. Fasten crosshairs to muzzle at witness marks.

d. Telescope M117A2 must be installed (para 2-10.2).

e. Use gunner's quadrant that has been checked by end-for-end test (para 3-10.2) to level trunnions as follows:

(1) Set radial arm (3) and micrometer knob (2) to zero.

(2) Set quadrant with end-for-end correction applied on crosswise leveling pads.

(3) Traverse howitzer until bubble centers (test target only).

f. Set tube at zero elevation (para 3-10.5).

g. Center bubbles in pitch-level and cross-level vials of M145A1 mount.

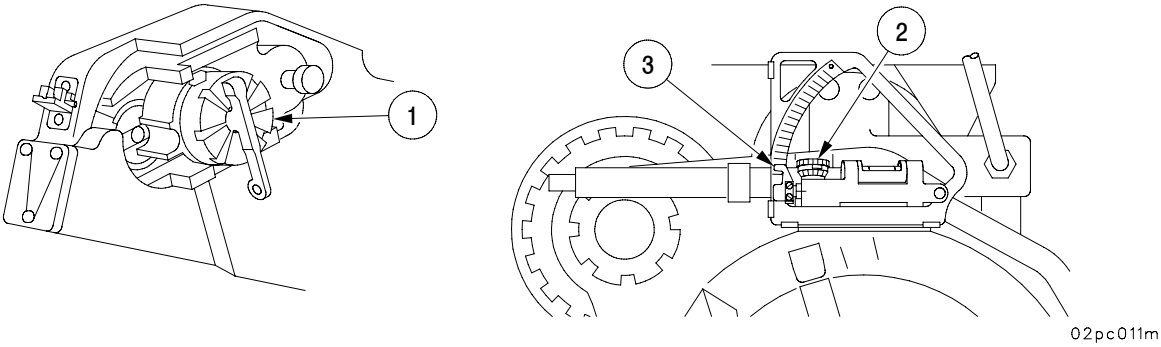

## 2-16 PREPARATION FOR FIRING - CONTINUED

### 2-16.6 Boresighting-Test Target Method.

**WARNING**

This boresighting procedure must be used to check M140/M140A1 alignment device. Failure of M140/M140A1 alignment device reticle to align with reticles of M117A2 could result in projectiles landing outside target area. Firing with misaligned fire control equipment can cause injury or death to friendly forces.

a. Perform all preliminary procedures (para 2-16.5).

b. Prepare test target as follows:

(1) Fasten it to stand for stability.

(2) For boresighting in dark, drill 1/16-inch hole through center of each aiming diagram. Cover holes with piece of cloth. At night, hold flashlight to boresight, against cloth.

c. Locate testing target 50 meters in front of howitzer.

d. Without moving tube, align center of aiming diagram with muzzle boresights.

**NOTE**

- Keep ballistic cover perpendicular to line of sight. After you have aligned reticles, you may rotate ballistic cover away from perpendicular and then return it. You can tell if you have established correct positioning if reticles are within ± 0.5 mil tolerance. If reticles are separated by more than ± 0.5 mil displacement, ballistic cover needs to be moved more toward perpendicular.

- Measurements do not appear on test target. They are shown in case it is necessary to make test target.

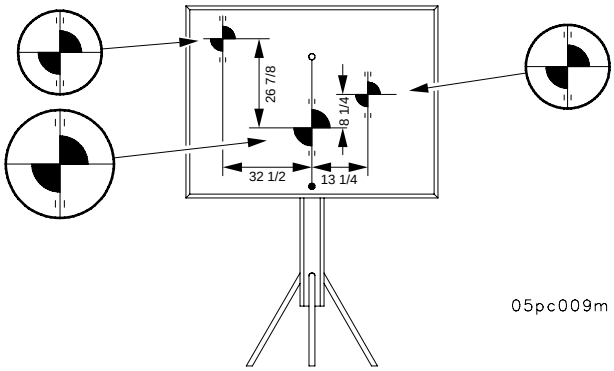

## 2-16 PREPARATION FOR FIRING - CONTINUED

### 2-16.6 Boresighting-Test Target Method - Continued

e. Adjust azimuth deflection knob (1) and elevation knob (2) on M117A2 to lay reticle precisely on left aiming diagram on test target.

f. Check that muzzle crosshairs are still centered on aiming diagram.

g. Check pitch-level vial (3) and cross-level vial (4) bubbles to be sure telescope mount is level.

**NOTE**

When viewing through PANTEL, parallax may occur if ballistic cover assembly is rotated. Ballistic cover assembly must be kept perpendicular to line of sight to keep parallax at a minimum.

h. Azimuth counter (5) should read 3200 mils. If it does not, remove cover (6) from boresight detent shaft. Insert small screwdriver and depress detent shaft. Turn shaft until 3200 mils appears in azimuth counter window (5). Recheck sight picture to be sure telescope is still in boresight.

i. Howitzer is now boresighted.

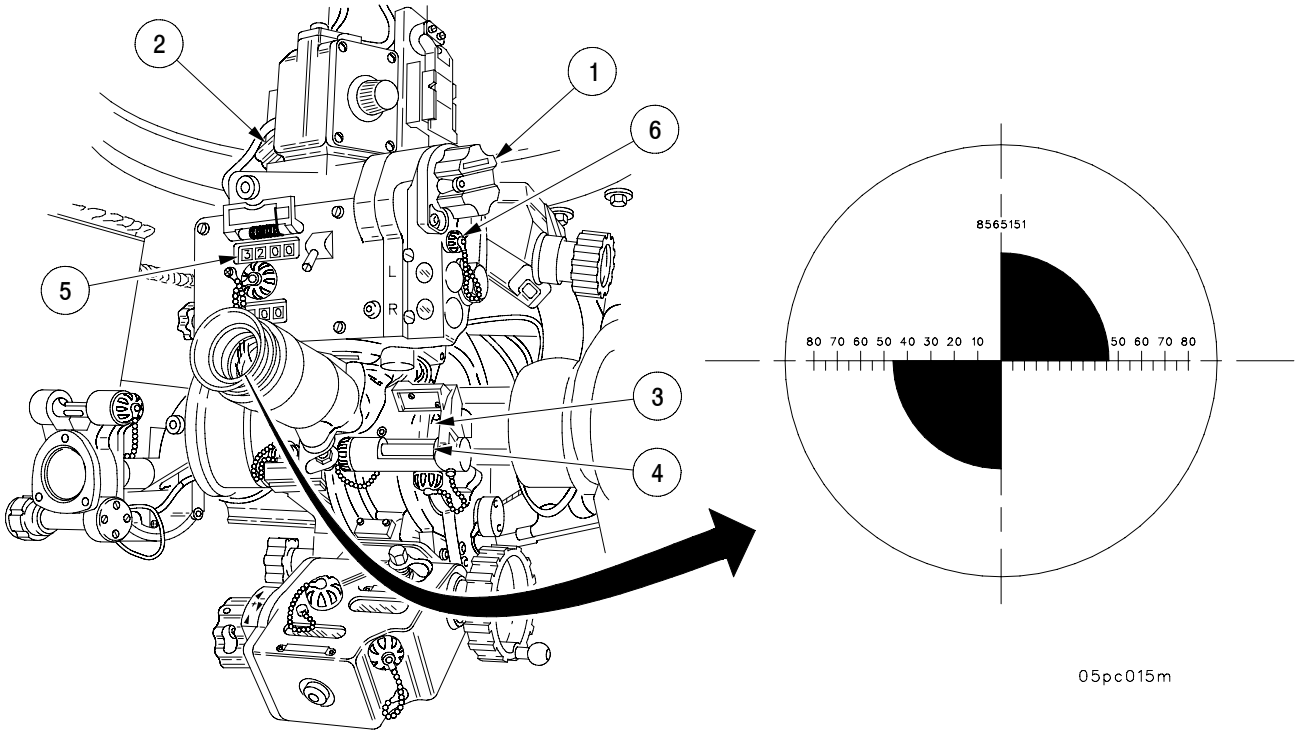

## 2-16 PREPARATION FOR FIRING - CONTINUED

### 2-16.7 Checking M140/M140A1 Alignment Device While Boresighting on Test Target.

a. Align cannon and M117A2 PANTEL on test target (para 2-16.6).

b. Remove alignment device (1) from stowage and protective cover from mounting adapter (2).

c. Inspect mating surfaces for burrs. Wipe mating surfaces clean. If mounting adapter has burrs, notify unit maintenance.

d. Install M140/M140A1 alignment device (1) on mounting adapter (2).

c. Check alignment of M140/M140A1 alignment device reticle (3) against reticle of M117A2 PANTEL laid on lefthand butterfly of test target. Reticles should align within 0.5 mil.

f. If M140/M140A1 alignment device does not align with telescope reticles, notify unit mantenance.

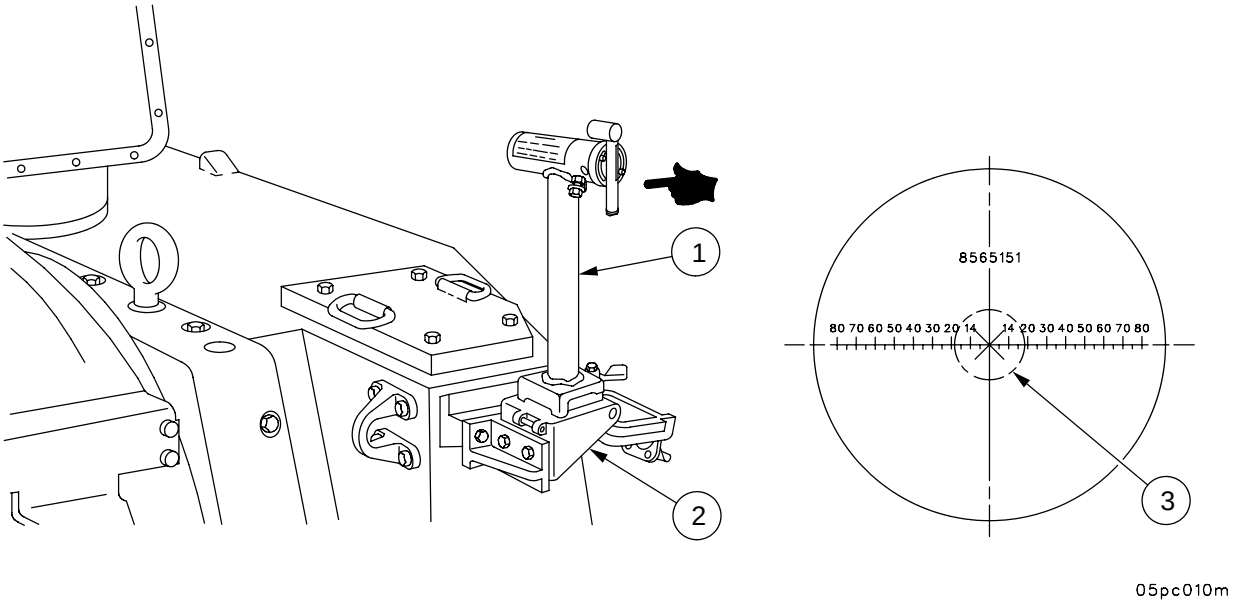

## 2-16 PREPARATION FOR FIRING - CONTINUED

### 2-16.8 Checking Boresight of M117A2 Using M140/M140A1 Alignment Device.

a. Remove M140/M140A1 alignment device (1) from stowage and protective cover from mounting adapter (2).

b. Inspect mating surfaces for burrs. Wipe mating surfaces clean. If mating surfaces have burrs, notify unit maintenance.

c. Install M140/M140A1 alignment device (1) on mounting adapter (2).

**NOTE**

During boresight check of PANTEL, parallax may occur betwen PANTEL and M140/M140A1 alignment device. This may happen as ballistic cover is rotated away from perpendicular to line of sight of PANTEL. Ballistic cover should be kept perpendicular to M140/M140A1 alignment device during boresighting to minimize this problem. Tolerance is ± 0.5 mils.

d. Position ballistic cover (3) perpendicular to M140/M140A1 alignment device (1) to eliminate error that may be induced by glass being turned at an angle.

e. Place M1/M1A1 gunner's quadrant (4) on breech pads and elevate or depress gun tube to zero mils elevation. Make sure cannon tube and gunner's quadrant (4) corrections are applied when depressing or elevating gun tube (para 3-10.5).

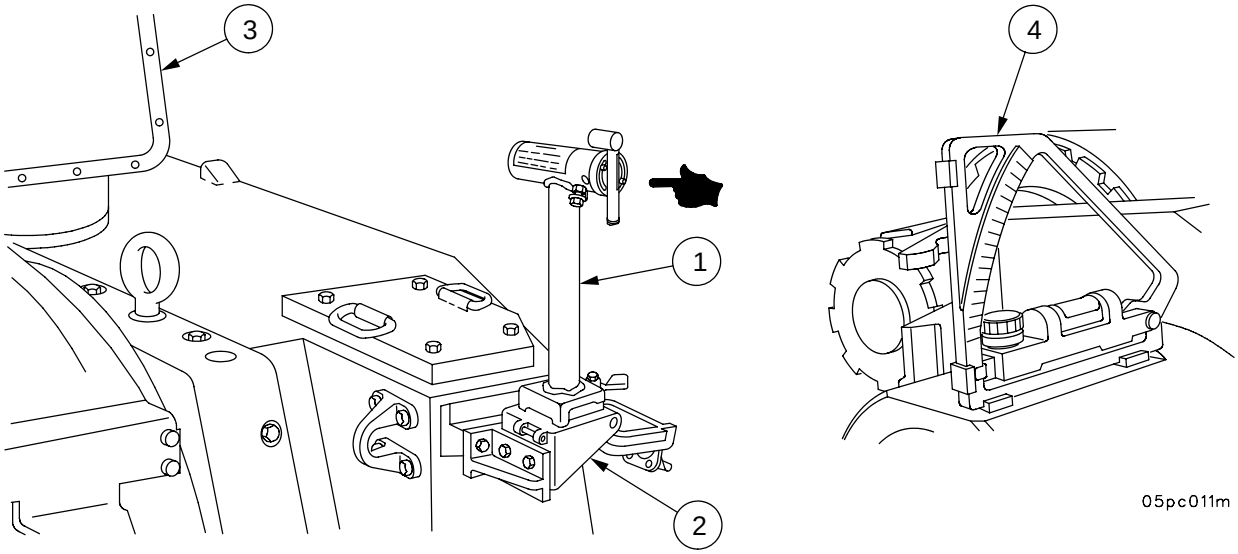

## 2-16 PREPARATION FOR FIRING - CONTINUED

### 2-16.8 Checking Boresight of M117A2 Using M140/M140A1 Alignment Device - Continued

f. Align scribed lines on cross-level knob (5) and pitch knob (6) of M145A1 mount.

g. To make sure PANTEL M117A2, M145A1 mount, and alignment device M140/M140A1 are properly aligned, make the following additional check:

(1) Rotate pitch knob (6) and cross-level knob (5) of M145A1 mount in a clockwise direction.

(2) Positions of knobs will be correct when upper end of gear sector driven by pitch knob (6) and right end cross-level knob (5) are in “nearest to flush position” in relation to adjacent casting.

(3) If mount is not correctly aligned, there will be excessive cutoff when viewing alignment device through PANTEL.

h. Align PANTEL crosshairs with alignment device using PANTEL azimuth deflection knob (7) and elevation knob (8).

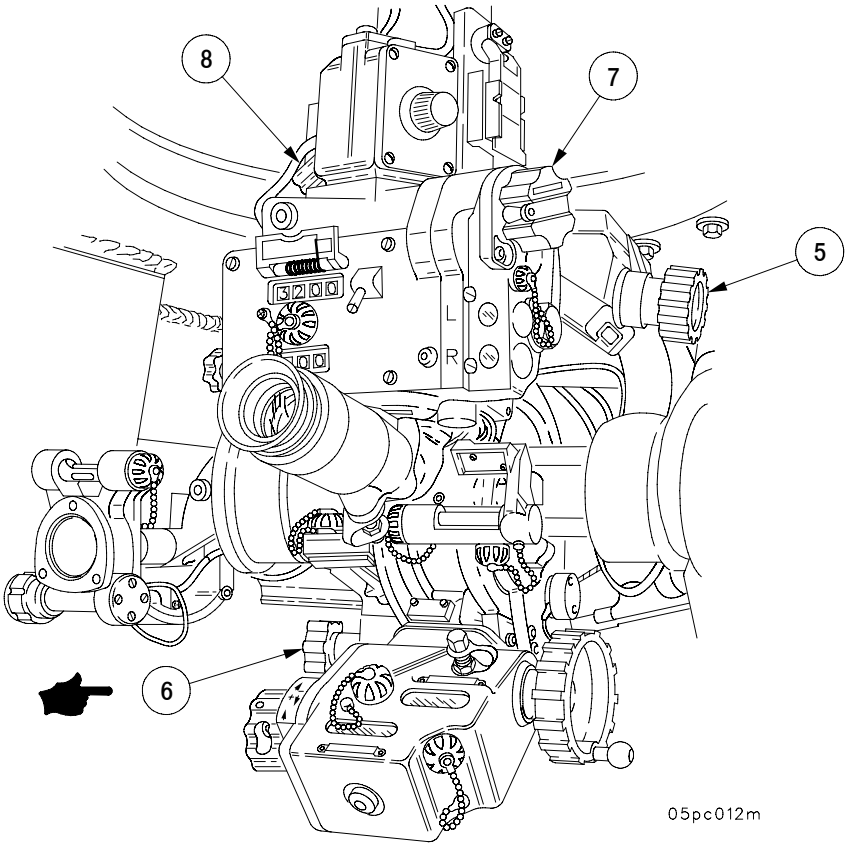

## 2-16 PREPARATION FOR FIRING - CONTINUED

### 2-16.8 Checking Boresight of M117A2 Using M140/M140A1 Alignment Device - Continued

i. With PANTEL reticle aligned with alignment device, and pitch knob (6) and cross-level knob (5) scribed lines aligned, azimuth counter (9) should read 3200 mils.

**NOTE**

After verifying accuracy of M140/M140A1 alignment device, if PANTEL azimuth counter exceeds tolerance of ± 0.5 mils, boresighting must be conducted using test target or distant aiming point before weapon can be fired.

j. If azimuth counter (9) reading is 3200 mils ± 0.5 mil, weapon is boresighted. If not, conduct M140/M140A1 alignment device comparison test (para 2-16.9).

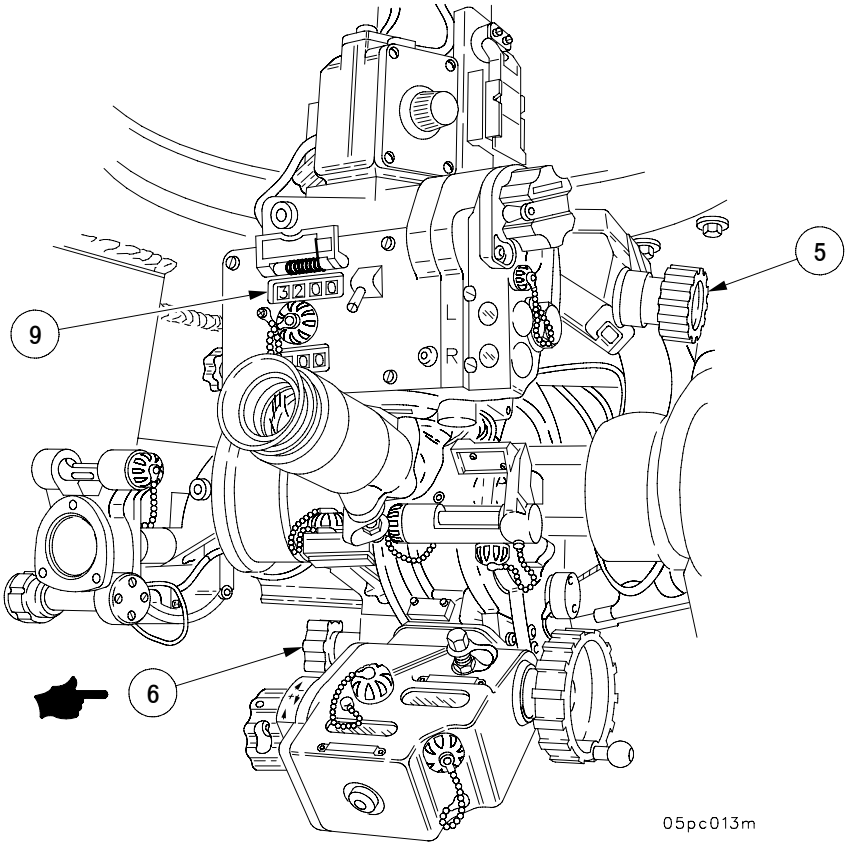

### 2-16.9 Comparison Test of M140/M140A1 Alignment Device.

**NOTE**

Comparison test of M140/M140A1 alignment device is performed to identify any device that has been bent or damaged due to accident or mishandling. Reference to azimuth counters pertains to M117A2 panoramic telescope only.

Perform test as follows:

**NOTE**

When viewing through PANTEL, parallax may occur if ballistic cover assembly is rotated. Ballistic cover assembly must be kept perpendicular to line of sight to keep parallax at a minimum.

a. Check boresight using M140/M140A1 alignment device.

b. Install second M140/M140A1 alignment device. Without moving position of telescope, view through eyepiece. If crosshairs on telescope and M140/M140A1 alignment device align, you have verified accuracy of M140/M140A1 alignment device.

**NOTE**

Correct azimuth reading is 3200 mils.

c. If crosshairs on telescope and second M140/M140A1 alignment device do not align, or if azimuth counter reading is not correct after crosshairs are aligned, one of two M140/M140A1 alignment devices is unserviceable.

d. To determine which M140/M140A1 alignment device is unserviceable, obtain third M140/M140A1 alignment device and check boresight of weapon again.

e. Without changing azimuth reading, install each of the other two M140/M140A1 alignment devices. The M140/M140A1 alignment device on which crosshairs will not align with telescope crosshairs is defective. Turn in M140/M140A1 alignment device to unit maintenance for repair.

## 2-16 PREPARATION FOR FIRING - CONTINUED

### 2-16.10 Boresighting - Distant Aiming Point Method.

a. Perform preliminary procedures (para 2-16.5). Tube must not have more than 90 mils cant.

b. Select aiming point with sharply defined right angle which is at least 1500 meters from the weapon.

c. Close breech, slide firing mechanism follower to right. Look through primer vent hole in breech and elevate and traverse tube until muzzle crosshairs are on the upper left-hand corner of distant aiming point.

d. Center cross-level vial (1) and pitch-level vial (2) bubbles by turning cross-level knob (3) and pitch-level knob (4).

e. Rotate azimuth deflection knob (5) and elevation knob (6) on M117A2 mount to lay PANTEL reticle on left edge of aiming point.

f. Now check that muzzle crosshairs are still on left-hand corner of aiming point.

g. Azimuth counter (7) should read 3200 mils. If it doesn't, remove cover (8) from boresight detent shaft, insert small screwdriver and depress detent shaft. Turn until 3200 mils appears in azimuth counter (7). Recheck sight picture to be sure PANTEL is still in boresight.

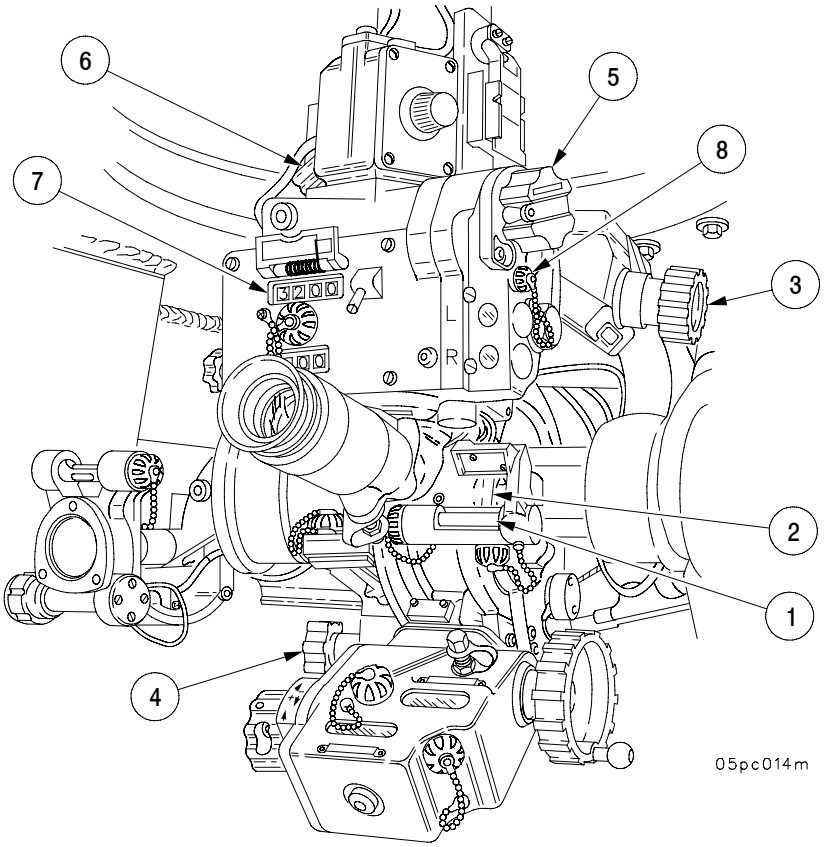

## 2-16 PREPARATION FOR FIRING - CONTINUED

### 2-16.11 Pre-Fire Checks.

2-16.11.1 Tube. Must be clear and dry with no visible damage or foreign matter present.

**WARNING**

If either of these checks are not right, do not fire. The cannon may blow up, causing severe injury or death to personnel. Notify unit maintenance. If you have a new or retubed cannon, check the following before initial firing.

a. Make sure rear face of gun tube (1) is flush with forward shoulder of breech ring (2).

b. Measure distance from rear face of cannon tube (1) to rear breech ring. Distance cannot be more than 5 inches (127.0 mm).

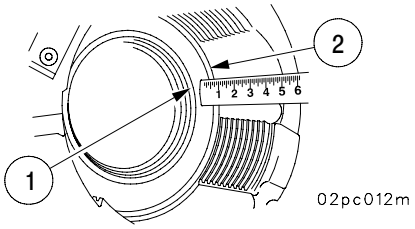


2-16.11.2 Low Voltage Checks.

**NOTE**

Check battery voltage frequently during firing operations when engine is not running. Prolonged use of vehicle system will lower battery voltage.

a. Check BATTERY-GENERATOR indicator for low battery charge.

b. If voltage reading goes into yellow zone at any time during operation, idle engine at 1000 rpm.

c. If voltage reading remains in yellow zone, verify that voltage regulator circuit breaker is in the ON position.

d. If system fails or does not otherwise operate normally, notify unit maintenance to check/replace batteries.

e. If BATTERY-GENERATOR indicator does not indicate LOW BATTERY, continue with normal operation.

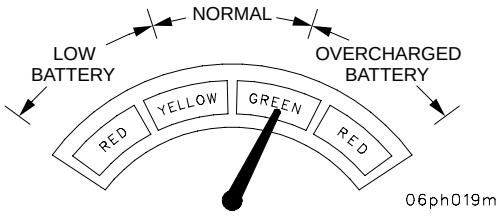

## 2-16 PREPARATION FOR FIRING - CONTINUED

### 2-16.11 Pre-Fire Checks - Continued

**WARNING**

Do not fire without follower assembly. This will result in injury to personnel.

2-16.11.3 Breech. Witness marks (1) must align when breech is closed. Firing mechanism (2), block assembly (3), and firing pin (4) serviceable. Primer vent (4) clean and breech operating handle (5) securely latched forward.

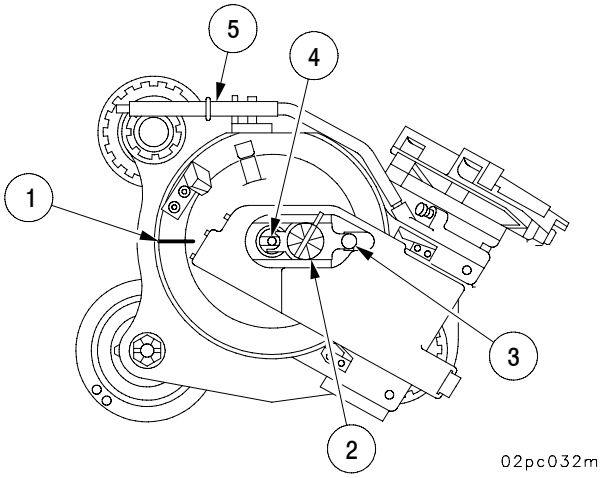


2-16.11.4 Rammer. Make reliability check of rammer (para 3-8.3).

2-16.11.5 Recoil System. Index guide pins (1) must not extend more than 3/4 in. or less than 1/4 in. Recuperator locking nut (2) and cotter key (3) must be properly installed. Recoil locking nut (4) must be properly installed. Replenisher pressure must be correct (17-24 psi) (Appendix I).

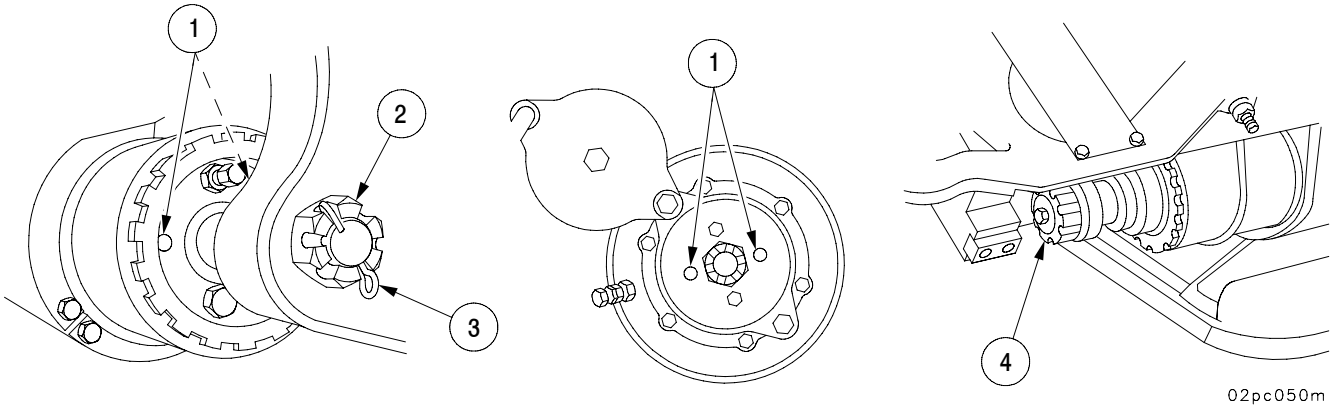

## 2-16 PREPARATION FOR FIRING - CONTINUED

### 2-16.12 * Loading 155MM Cannon.

**WARNING**

All crewmembers must be familiar with misfire procedures (para 2-19) before loading howitzer for firing to prevent serious injury or death to personnel.

a. When fire mission is announced, chief of section indicates aiming point reference to gunner (collimator, DAP) and repeats fire mission to crew.

**WARNING**

- Dirt or grease left on projectile rotating band could cause failure of projectile to seat properly on ramming. Firing an unseated projectile could cause an inbore explosion, resulting in INJURY or DEATH to personnel.
- Upon announcement of fire mission, cannoneer must make sure that ventilation blower is on INTAKE to prevent smoke from entering the cab during all firings.

**CAUTION**

Be careful when placing ammunition in hull to prevent damage to rotating band.

b. The cannoneer verifies, cleans and inspects type of projectile to be fired. He examines rotating band to see that it is free from dirt and burrs. Then he stands projectile in upright position for fuzing. For preparation of M712 projectiles (copperhead), refer to para 5-25.

*Standardized procedures for firing drills are identified with an asterisk (*) preceding the title.

## 2-16 PREPARATION FOR FIRING - CONTINUED

### 2-16.12 Loading 155MM Cannon - Continued

**WARNING**

Do not load or fire artillery ammunition without authorized fuze or fully seated fuze. Firing of such rounds without fuzes, fully seated fuzes, or unauthorized fuzes could result in inbore prematures and other hazardous conditions causing serious injury or death to personnel.

c. Cannoneer removes lifting plug and inspects fuze well for rust, dirt, or leaking filler. He removes supplementary charges (para 5-10.3), if required, and fuzes projectile (para 5-10.4). He sets fuze for desired fuze action (i.e., SQ, D or time). When directed, cannoneer reads and announces time set on fuze.

d. Gunner prepares propellant charge (para 5-8.2).

**WARNING**

Never forget to put operating handle back to stowed position. Make it a practice never to let go of operating handle until you return it to stowed position. If left down while closing breechblock, it can cause serious injury to personnel.

e. Cannoneer opens breechblock (1) (first round only) by depressing operating handle detent plunger (2) and pulling operating handle (3) rearward until operating crank roller (4) is engaged in cradle cam (5). He returns operating handle (3) to stowed position (forward).

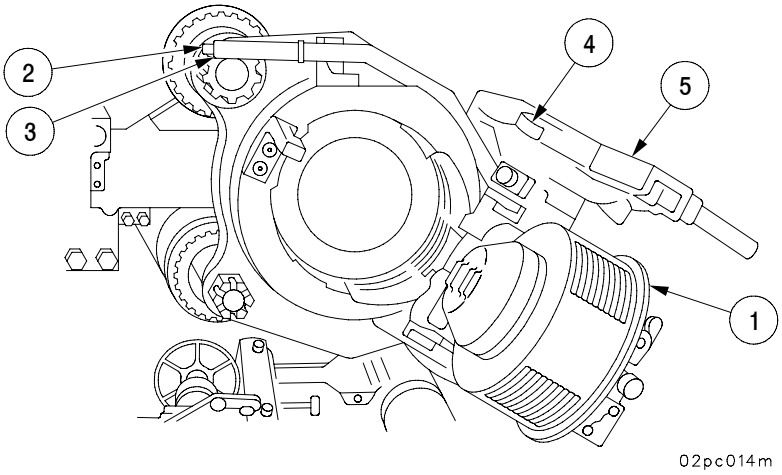

## 2-16 PREPARATION FOR FIRING - CONTINUED

### 2-16.12 Loading 155MM Cannon - Continued

**CAUTION**

A load elevation above 300 mils may result in breech failing to close and may cause unnecessary wear on spring pack.

f. Chief of section makes sure that tube is at loading elevation (less than 300 mils).

**NOTE**

If rammer is not working, refer to para 2-16.13 for hand ramming instructions.

g. Check pointer (6). It should be in black band, indicating that rammer is properly stowed and latched.

h. Cannoneer pulls rammer main release handle (7) and slides rammer back to rear stop. Pointer (6) should now be in red band.

i. Cannoneer places his left hand on cylinder release handle (8) and swings rammer up and forward until latched. Pointer (6) returns to black band.

j. Cannoneer pulls on cylinder release handle (8), unlatches and rotates cylinder to the side. Don't touch main release handle (7).

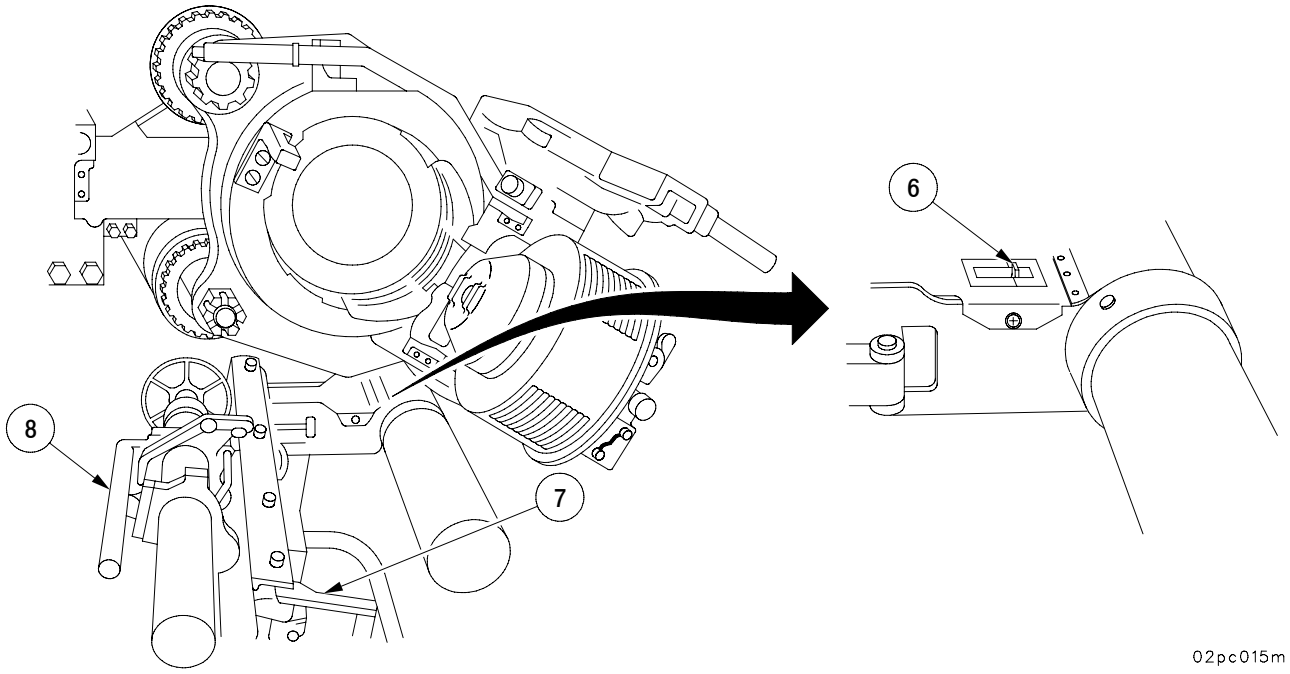

## 2-16 PREPARATION FOR FIRING - CONTINUED

### 2-16.12 Loading 155MM Cannon - Continued

**CAUTION**

Be careful not to accidentally push rammer lever on ceiling of cab while rammer is in unlatched/loading position.

k. Cannoneer places projectile on rammer tray (9) and pushes projectile forward until rear of projectile is just beyond line (10).

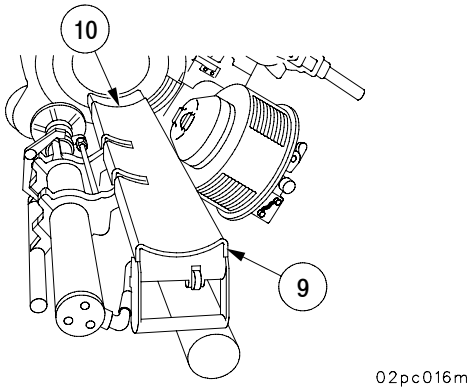


l. Upon hearing last digit of quadrant, cannoneer rotates rammer cylinder (11) up to latch position.

**WARNING**

Be sure to hold actuating valve forward for a full 4 seconds to properly seat projectile. Improperly seated projectiles cause short rounds and injury to personnel.

m. Cannoneer reaches up to rammer actuating valve on cab ceiling and pushes manual control lever (12) forward, holding lever for 4 seconds to allow full extension of rammer cylinder rod and proper seating of projectile. After projectile is seated, cannoneer releases control lever (12).

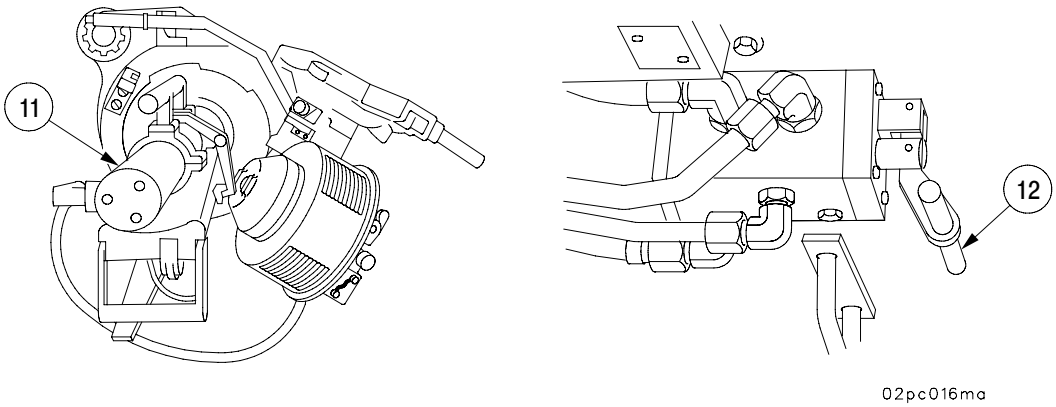

## 2-16 PREPARATION FOR FIRING - CONTINUED

### 2-16.12 Loading 155MM Cannon - Continued

**CAUTION**

Do not let rammer fall to stowage bracket. Dropping rammer can cause tray bracket to crack.

n. With his right hand on main release handle (7) and his left hand on cylinder release handle (8), cannoneer pulls rammer all the way to rear. He rotates loader-rammer counterclockwise and pushes rammer forward to stowed position. Make sure pointer (6) is inside the black band.

**CAUTION**

- Always place rammer in stowed position when elevating cannon.
- If rammer is left in ramming position when elevating above 80 mils, the rammer will strike the floor and bend the rammer support shaft.

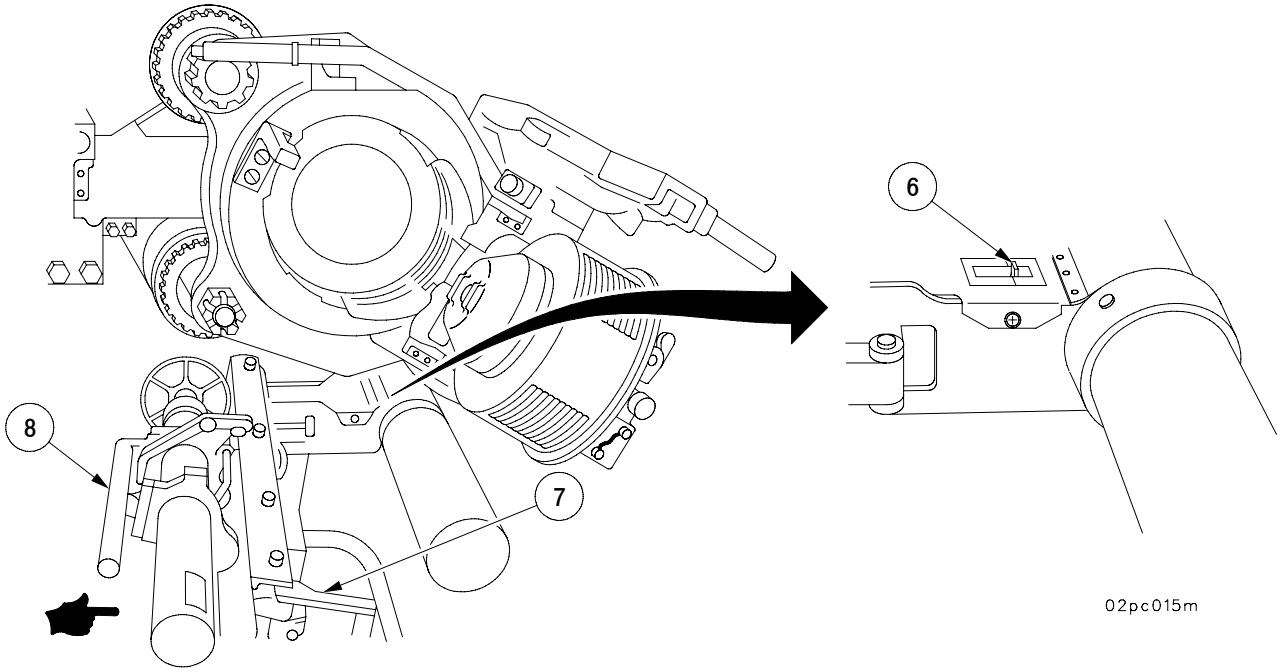

## 2-16 PREPARATION FOR FIRING - CONTINUED

### 2-16.12 Loading 155MM Cannon - Continued

**WARNING**

- To prevent smoke in the cab when all hatches are closed, be sure to set the ventilator blower switch to INTAKE (lead filter blower will come on) during all firings.
- The top and driver's hatch must be closed for all charges.
- The side hatch must also be closed for M119 series.
- All hatches and doors must be closed for M203 series.
- Never load a propelling charge into chamber by increments. Only fully assembled charges will be used. Critical malfunction could result.
- Do not assemble M3 series green bag charges with M4 series white bag charges. Critical malfunction could result.
- When inserting propellant charge, check that ignitor (red) end is towards the gunner. If charge is not properly loaded, a misfire may result.
- Prior to firing each round, be sure that all unused propelling charges are in their packing containers with lids secured. Maintain in containers until bore clear is verified.

**NOTE**

Don't put propellant charge in until just before firing. Temperature variation will affect performance of charge.

## 2-16 PREPARATION FOR FIRING - CONTINUED

### 2-16.12 Loading 155MM Cannon - Continued

**NOTE**

- Perform step o and steps p through t when using bag charges.
- Perform step o.1 and steps p through t when using MACS charges.

o. Gunner loads propelling charge (13) into cannon chamber with igniter (red) end toward breechblock assembly so that it is 3 inches inside rear of chamber or in groove in chamber.

**WARNING**

- Do not mix M231 and M232/M232A1 charges. Failure to comply will result in injury or death to personnel.
- Do not load any packaging materials or spacers. Failure to comply will result in injury or death to personnel.

**NOTE**

The M231 and M232/M232A1 are bi-directional charges (can be loaded in either direction).

o.1 Gunner loads propelling charge (13) into cannon chamber so that it is in groove of chamber.

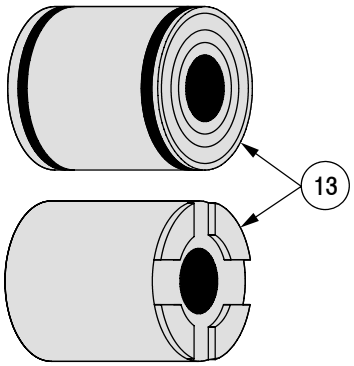


MACS CHARGES

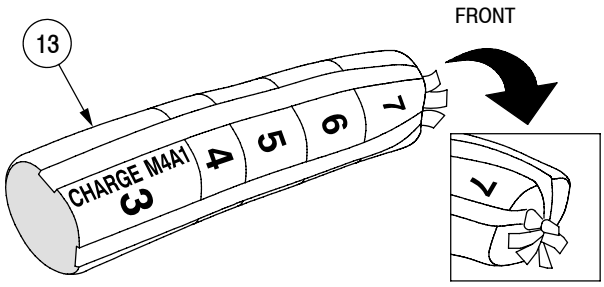


BAG CHARGE

02pc417m

## 2-16 PREPARATION FOR FIRING - CONTINUED

### 2-16.12 Loading 155MM Cannon - Continued

**WARNING**

Stand clear of breechblock. Do not close breechblock unless red igniter pad is visible.

p. Gunner commands “CLOSE” and lifts operating cam handle (14).

q. After breechblock is closed, gunner makes sure that witness marks (15) are aligned. If witness marks are not aligned, do the following:

(1) Grasp operating handle (3) and push in clutch pin (16).

(2) Hold clutch pin (16) in and push in detent plunger (2) to disengage operating handle (3) from catch (17). Push and pull on operating handle (3) to rotate and close breechblock.

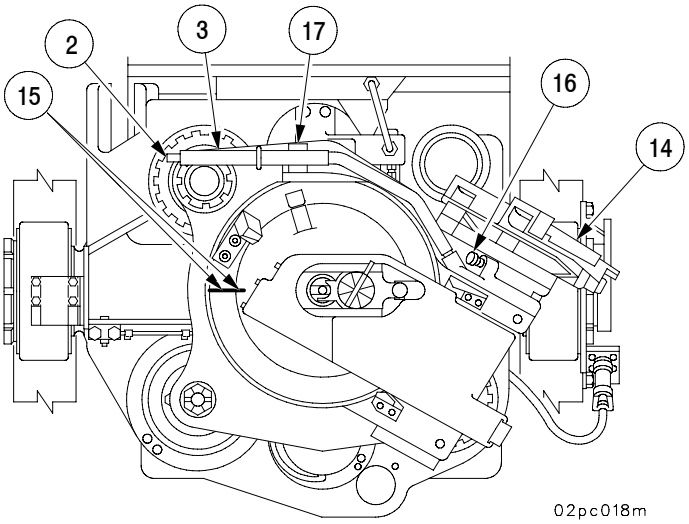

## 2-16 PREPARATION FOR FIRING - CONTINUED

### 2-16.12 Loading 155MM Cannon - Continued

**WARNING**

- Never insert primer in primer cavity unless breechblock assembly is closed and witness marks are aligned. Ignition of propelling charge with breechblock not fully closed presents a critical hazard to crew. Report unsafe condition to COS and unit maintenance and unload cannon.
- Don't force primer into primer chamber. If primer will not go in, chamber is probably dirty. Forcing primer into primer chamber may cause primer to prematurely ignite powder charge, which will prematurely cause the howitzer to recoil resulting in serious injury to the crew.
- Use only M82 primer in cannon.

r. Chief of Section gives command, "PRIME", Cannoneer inserts primer (18) into primer chamber. Don't force primer. If primer will not go in, chamber is probably dirty. Clean both primer chamber and obturator vent hole.

**WARNING**

Do not fire without follower assembly. Doing so will result in injury to personnel.

**CAUTION**

Be sure block assembly is all the way left. If it isn't, misfire will result. Do not hook lanyard to firing mechanism until Chief of Section commands "HOOKUP".

s. Make sure flanged head of primer (18) is firmly seated against extractor (19).

t. Cannoneer slides firing mechanism block assembly (20) left by pulling on follower knob (21).

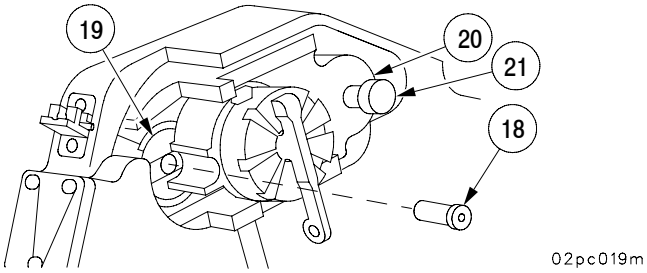

## 2-16 PREPARATION FOR FIRING - CONTINUED

### 2-16.13 Loading 155MM Cannon-Hand Ramming.

**NOTE**

In NBC environment, use one long and one short rammer staff.

a. Cannoneer assembles four rammer staffs to loading rammer.

b. The chief of section elevates gun tube approximately 265 mils elevation to permit hand ramming through rear hull door.

c. Cannoneer places rammer tray (1) in position.

d. Cannoneer places projectile (2) on rammer tray (1) and pushes projectile (2) forward by hand until rotating band (3) is just forward of rammer tray (1).

e. Cannoneer places loading rammer against base of projectile (2).

f. Cannoneer and gunner, on command “RAM,” push projectile (2) as hard as possible to seat it in tube.

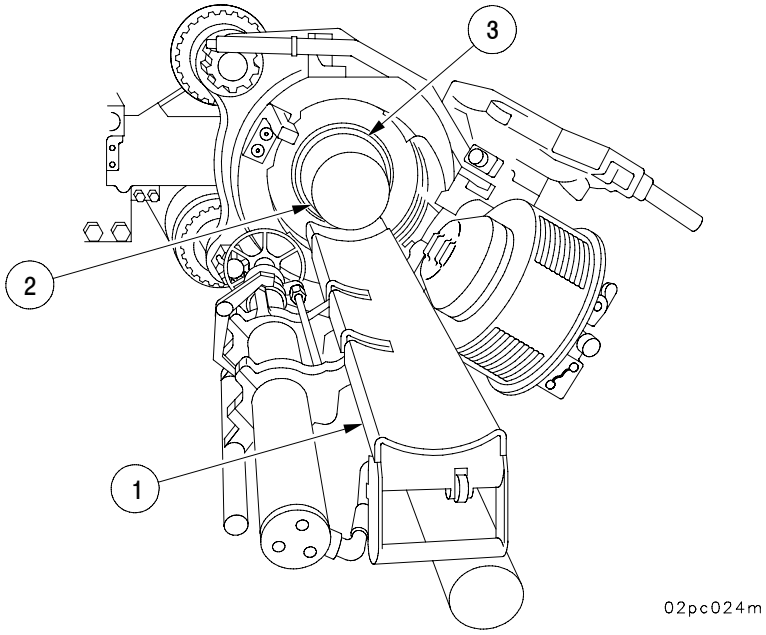

## 2-16 PREPARATION FOR FIRING - CONTINUED

### 2-16.14 Laying For Deflection and Quadrant During Indirect Fire Missions - Using Collimator M1A1/M1A2.

a. Upon announcement or data display of “DEFLECTION (SO MUCH),” gunner rotates PANTEL azimuth deflection knob (1) until announced deflection appears on RESET counter (2). He then reads setting to chief of section.

b. Upon announcement or data display of “QUADRANT (SO MUCH),” gunner rotates ELEVATION HAND-WHEEL (3) until announced QUADRANT appears on ELEVATION counter (4). He then reads setting to chief of section.

c. Sighting through PANTEL eyepiece, gunner traverses cab until he gets proper sight picture on aiming point.

d. The gunner centers pitch-level vial (5) and cross-level vial (6) bubbles on M145A1 mount (7).

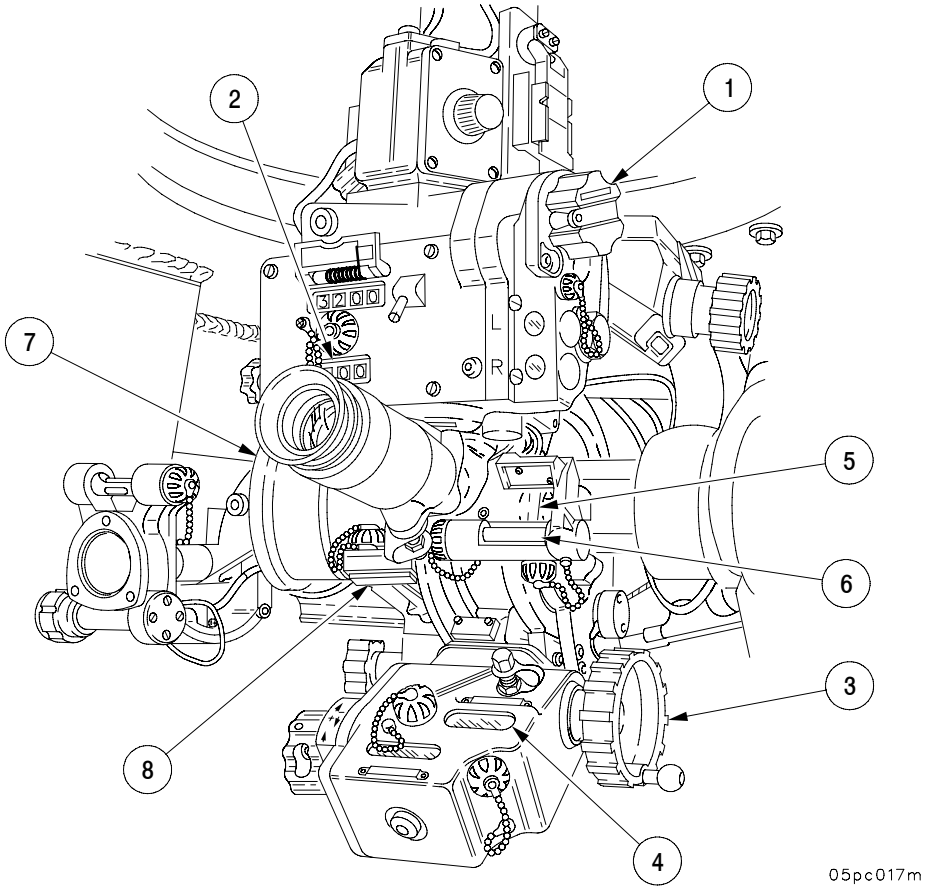

## 2-16 PREPARATION FOR FIRING - CONTINUED

### 2-16.14 Laying For Deflection and Quadrant During Indirect Fire Missions - Using Collimator M1A1/M1A2 - Continued

e. To correct for weapon displacement, gunner must match reticle of PANTEL with collimator reticle pattern. Numbers in collimator reticle indicate 5 mil increments. Individual mils are indicated by short lines in V format of pattern. For example, if gunner sees 10 and 15 in collimator and reticle pattern slopes upward from right to left, weapon has experienced right displacement. To compensate for this displacement, gunner matches left portion of PANTEL reticle with collimator as shown below.

f. If gunner sees 10 and 15 in collimator and pattern slopes upward from left to right, weapon has experienced left displacement. To compensate for this displacement, gunner matches the right portion of PANTEL reticle with collimator reticle, as shown below.

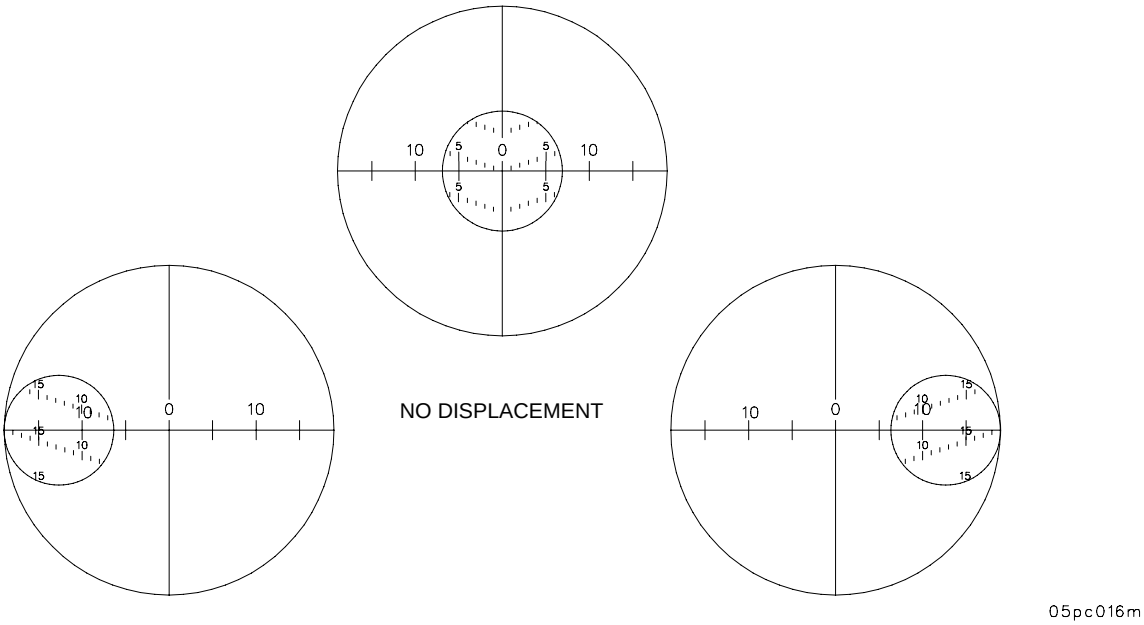


RIGHT DISPLACEMENT

LEFT DISPLACEMENT

## 2-16 PREPARATION FOR FIRING - CONTINUED

### 2-16.14 Laying For Deflection and Quadrant During Indirect Fire Missions - Using Collimator M1A1/M1A2 - Continued

**NOTE**

Each time howitzer is traversed or cannon is elevated or depressed, gunner must repeat steps c and d before aligning PANTEL on any reference aiming point.

g. After gunner lays for deflection he will then elevate or depress the cannon tube until elevation-level vial (8) bubble has centered. Gunner then verifies that announced deflection appears on reset counter (2), that PANTEL mount pitch-level (5) and cross-level vial (6) bubbles are centered, and a proper sight picture is on collimator. Gunner then announces "READY".

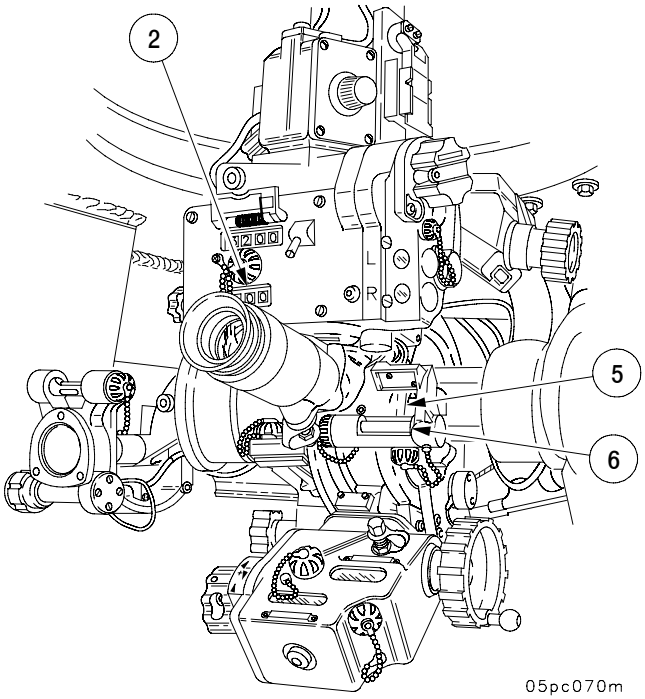


**NOTE**

If there is no weapon displacement, the sight picture should appear as shown.

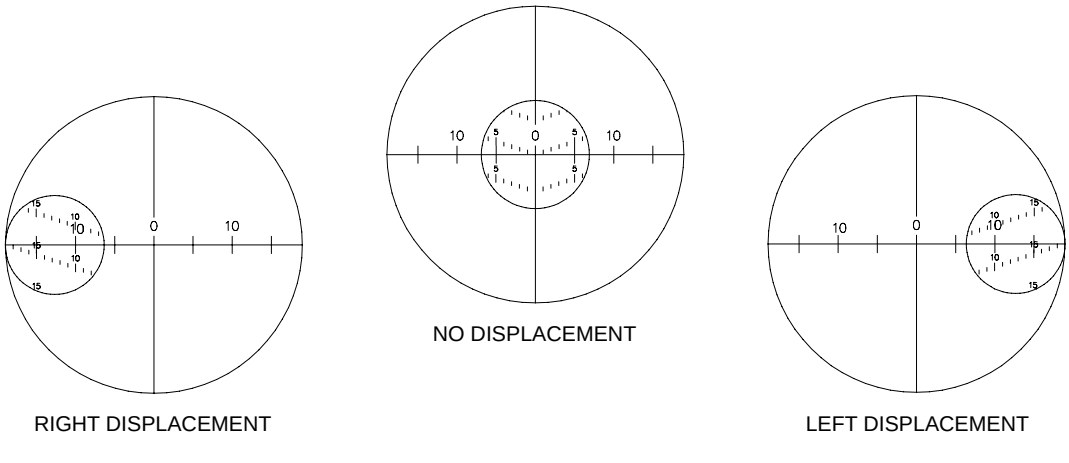

## 2-16 PREPARATION FOR FIRING - CONTINUED

### 2-16.15 Laying for Deflection and Quadrant During Indirect Fire Missions- Laying for Elevation Using M1A1 Gunner's Quadrant.

**NOTE**

Each time cannon is elevated or depressed, gunner must repeat steps a thru d.

a. Upon announcement, or data display, of QUADRANT (SO MUCH), gunner pushes radial arm plunger (1) in and adjusts radial arm (2) up or down elevation scale (3) to announced quadrant. He then reads setting to chief of section.

**NOTE**

Make sure "line of fire" arrow is pointing forward.

b. After placing M1A1 gunner's quadrant on cannon breech quadrant seats (4), gunner elevates or depresses cannon until bubble centers in level vial (5).

c. Gunner uses elevation scale on opposite side of quadrant for elevation over 800 mils.

d. Gunner announces "SET" when bubble centers in level vial.

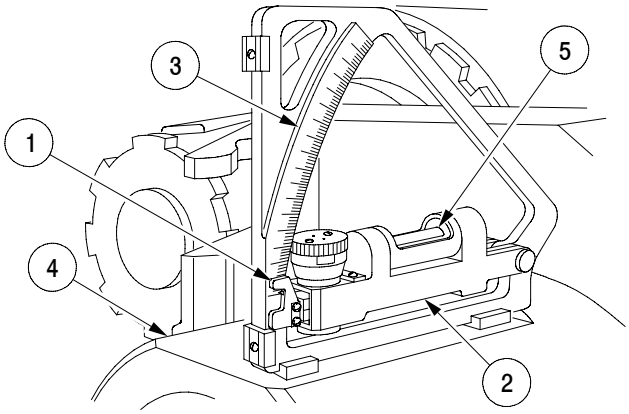


05pc019m

## 2-16 PREPARATION FOR FIRING - CONTINUED

### 2-16.16 Direct Fire Procedures.

**WARNING**

Direct fire on targets located closer than 800 meters from howitzer will be fired on during combat situations only. Lethal fragments can travel up to 600 meters from point of burst.

Direct fire is used against either stationary or moving targets at close range (normally less than 2000 meters). The section will usually fire the HE projectile and highest authorized charge. Either fuze quick, delay, or time may be used. Fuze quick is best against close-in targets. The gun can be aimed using lead and range tables, or the AFCS/PDFCS can be used to aid in laying the gun.

2-16.16.1 Direct Fire Procedures Without AFCS/PDFCS.

**NOTE**

When command to engage in direct fire is given, chief of section is in complete control and directs firing of his section.

a. Chief of section first identifies designated target. If target consists of several weapons, he selects target that is greatest threat to his position.

b. Chief of section gives fire command in following order:

**NOTE**

- "Fire at will" means to keep firing until target is destroyed or another command is given.
- Chief of section will estimate range if he has no accurate range data.
- Use DIRECT FIRE MOVING TARGET LEAD chart mounted in commander's cupola for initial lead. An additional lead chart is mounted on left wall of cab for gunner's reference as required.

## 2-16 PREPARATION FOR FIRING - CONTINUED

### 2-16.16 Direct Fire Procedures - Continued

2-16.16.1 Direct Fire Procedures Without AFCS/PDFCS - Continued

**DIRECT FIRE MOVING TARGET LEAD**

| TARGET SPEED (MPH) | TARGET DIRECTION OF TRAVEL LEAD IN MILS (m) | | |
|---|---|---|---|
| | ↔ | ⤫ | ↕ |
| 5 | 5m | 5m | 0m |
| 10 | 10m | 5m | 0m |
| 15 | 15m | 10m | 0m |
| 20 | 20m | 15m | 0m |
| 25 | 25m | 15m | 0m |
| 30 | 30m | 20m | 0m |

**NOTE**

Gunner will use DIRECT FIRE RANGE PLATE (shown below) to determine elevation based on announced range, charge, and projectile.

**DIRECT FIRE RANGE PLATE**
**155MM HOWITZER**

| M549A1 RAP | | | M107 HE PROJECTILE | | |
|---|---|---|---|---|---|
| ROCKET OFF | | | M119A1 PC WB | | |
| M203 SERIES PC RB | | | M119A2 PC WB | | |
| RANGE (METERS) | | ELEV (MILS) | RANGE (METERS) | | ELEV (MILS) |
| 400 | - | 3 | 400 | - | 4 |
| 600 | - | 5 | 600 | - | 7 |
| 800 | - | 6 | 800 | - | 9 |
| 1000 | - | 8 | 1000 | - | 11 |
| 1200 | - | 9 | 1200 | - | 14 |
| 1400 | - | 11 | 1400 | - | 16 |
| L15 HE PROJECTILE | | | M107 HE PROJECTILE | | |
| M203 SERIES PC RB | | | M4A2 PC (WB) | | |
| RANGE (METERS) | | ELEV (MILS) | RANGE (METERS) | | ELEV (MILS) |
| 400 | | | 400 | - | 6 |
| 600 | | | 600 | - | 10 |
| 800 | | | 800 | - | 13 |
| 1000 | | | 1000 | - | 16 |
| 1200 | | | 1200 | - | 20 |
| 1400 | | | 1400 | - | 23 |
| PLATE DIRECT FIRE | | | P/N 12910859 | | |

| ELEMENT | EXAMPLE |
|---|---|
| Target designation | Target, lead tank |
| Projectile, Charge, Fuze | Shell HE, Charge 7, fuze quick |
| Lead | Lead right (left) 10 |
| Quadrant | Quadrant One |
| Method of fire | Fire at will |

# 2-16 PREPARATION FOR FIRING - CONTINUED

## 2-16.16 Direct Fire Procedures - Continued

2-16.16.1 Direct Fire Procedures Without AFCS/PDFCS - Continued

c. Gunner centers cross-level vial (1) bubble, sets azimuth counter (2) to 3200, and turns direct/indirect fire bar (3) to direct position to engage 5.0 mils per click sight mechanism.

d. If central laying is used, gunner places announced lead on azimuth counter, sights through eyepiece and traverses tube until vertical hairline of PANTEL centers on target (see illustration below). If reticle method is used, gunner places vertical hairline left or right of target, number of mils lead announced by chief of section.

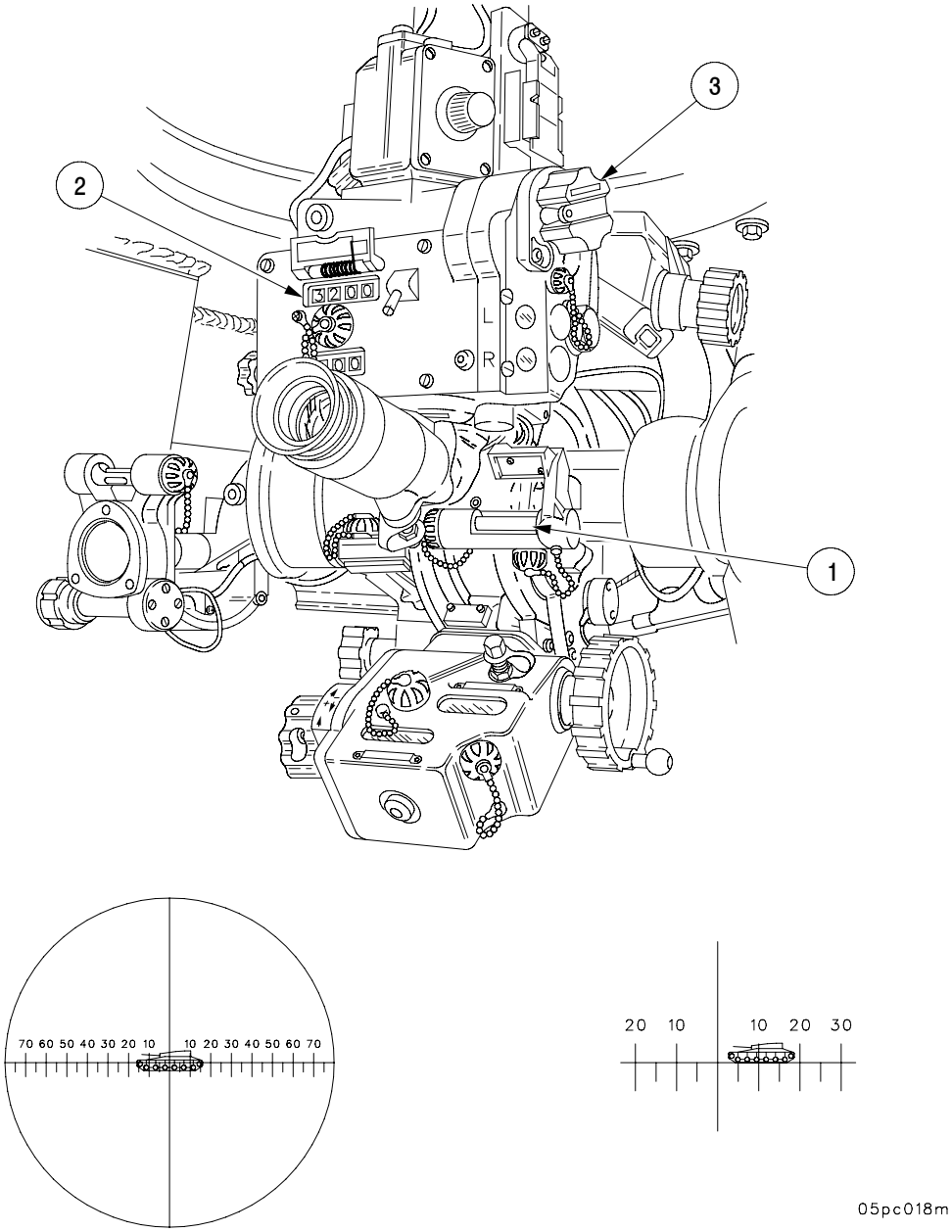

## 2-16 PREPARATION FOR FIRING - CONTINUED

### 2-16.16 Direct Fire Procedures - Continued

2-16.16.1 Direct Fire Procedures Without AFCS/PDFCS - Continued

e. Gunner lays for both deflection and elevation. He sets announced quadrant on auxiliary elevation counter and elevates or depresses tube until elevation level bubble is centered. He then centers cross-level vial bubble. With 3200 set on azimuth counter, he traverses tube until crosshair or reticle pattern is on target center of mass, or correct lead is established. When gunner establishes correct sight picture, he commands "FIRE." After firing, he continues to lay on target until it is destroyed or a subsequent fire command is issued.

f. Chief of section gives subsequent fire commands based on observed effects, and changes range, lead, or both as necessary.

| ELEMENT | EXAMPLE |
|---|---|
| Change in lead | RIGHT (or LEFT) 5 |
| Change in range | ADD (or DROP) 100 |

Gunner turns azimuth deflection knob in 5-mil (1 click) increments to set lead changes.

**DIRECT FIRE TABLE, 155MM HOWITZER, SHELL HE, CHARGE 8**

| RANGE METERS | ELEVATION MILS | VERITICAL DISPLACEMENT FEET | FIRING DATA |
|---|---|---|---|
| 100<br>200<br>300<br>400<br>500<br>600 | 2<br>3<br>5<br>6<br>8<br>10 | 0<br>.5<br>1.0<br>1.5<br>2.0<br>3.0 | 1. Start firing at estimated range or 400 meters, whichever is greater.<br>2. Make 100 meter range changes until round is on target. |
| 700<br>800<br>900<br>1000<br>1100<br>1200<br>1300<br>1400 | 12<br>13<br>15<br>17<br>19<br>20<br>22<br>24 | 3.5<br>4.0<br>4.5<br>5.0<br>6.0<br>6.5<br>7.0<br>8.0 | 1. Start firing at estimated range.<br>2. Adjust using bracket (overs and shorts).<br>3. Make 200 meter range changes until rounds bracket target.<br>4. Split bracket until round is on target. |
| 1500<br>1600<br>1700<br>1800<br>1900<br>2000<br>2100<br>2200 | 26<br>28<br>30<br>32<br>34<br>36<br>38<br>40 | 8.5<br>9.5<br>10.0<br>10.5<br>11.5<br>12.0<br>13.0<br>13.5 | 1. Start firing at estimated range.<br>2. Adjust using bracket (overs and shorts).<br>3. Make 400 meter range changes until you get a bracket.<br>4. Split bracket until round is on target. |

# 2-16 PREPARATION FOR FIRING - CONTINUED

## 2-16.16 Direct Fire Procedures - Continued

2-16.16.2 Direct Fire Procedures Using AFCS/PDFCS.

Refer to para 2-15.6 (AFCS) OR 2-15E.5.6 (PDFCS).

**NOTE**

Verify boresight using the M140/M140A1 alinement device prior to laying the gun.

2-16.16.3 Reciprocal Laying of Howitzer.

This procedure may be used to lay a howitzer with a nonfunctional AFCS/PDFCS, designated the degraded howitzer, on another howitzer with a functional AFCS/PDFCS, designated the functional howitzer.

a. Degraded howitzer emplaces roughly lined on azimuth of fire.

b. Functional howitzer emplaces on azimuth of fire and traverses tube to back azimuth.

c. On receipt of command to lay parallel, degraded howitzer sights on functional howitzer PANTEL and announces “NUMBER 2 AIMING POINT IDENTIFIED.”

d. Functional howitzer sights on degraded howitzer Panoramic Telescope and commands “NUMBER 2, DEFLECTION 4321.” (Announced deflection is read directly from azimuth counter.)

e. Degraded howitzer repeats “NUMBER 2, DEFLECTION 4321” and sets off announced deflection on azimuth counter.

f. Degraded howitzer traverses tube and aligns its PANTEL with functional howitzer.

g. Degraded howitzer announces “NUMBER 2, READY FOR RECHECK.”

h. Repeat steps d thru g until deflections are same.

i. When deflections are same, degraded howitzer announces “NUMBER 2, DEFLECTION 4323, ZERO MILS.”

j. On receipt of command, functional howitzer announces “NUMBER 2 is LAID.”

k. Degraded howitzer establishes an aiming point (i.e., collimator) in accordance with current procedures (para 2-16.14).

## 2-17 FIRING 155MM CANNON.

**WARNING**

- To prevent propellant fumes, smoke and carbon monoxide in the cab when all hatches are closed, be sure to set Lead Filter switch to ON (on the Accessory Control Box) and move Vent Duct Control Handle into UP position during all firings.
- The top and driver's hatch must be closed for all charges.
- The side hatch must also be closed for M119 series.
- All hatches and doors must be closed for M203 series.
- Firing mechanism lever should be positioned before primer is inserted in primer vent.
- Prior to firing each round, be sure all unused propelling charges are in their packing containers with lids secured. Maintain in containers until bore clear is verified.
- Do not fire without follower assembly. This will result in injury to personnel.
- For each new issue, overhauled, or inspected and repaired cannon or repair mount received, fire first round using 50-ft lanyard.
- All hatches must be closed when firing the M203 series charge; only the rear hatch may be open when firing the M119 series charge; the rear and side hatches may be open when firing M3 and M4 series charges; and the top hatches and driver's hatches must remain closed at all times when firing any charge.
- Make sure that water remaining in tube after swabbing is kept to a minimum.

**CAUTION**

After new torque key or cannon tube has been installed, zone 6 charge must be first round fired to mate torque key and cannon tube. Failure to follow this procedure could result in equipment damage.

## 2-17 FIRING 155MM CANNON - CONTINUED

### NOTE

- The howitzer is fired only upon verbal and/or hand signal from chief of section.
- The cannon can be fired from either side. The firing mechanism lever can be rotated to any one of eight positions on firing mechanism. Push on eyelet end of firing mechanism lever and rotate.
- Tube position (specifically elevation) should be rechecked prior to firing.
- Ventilation fan selection switch must be set to LEAD FILTER (INTAKE) position during firing.

a. Chief of Section verifies data, sees that all crewmembers are in their proper places, and commands, “HOOKUP”. Cannoneer attaches lanyard to eyelet of firing mechanism lever (1), and announces, “HOOKUP”. Chief of Section gives command, “FIRE” and / or drops his raised arm.

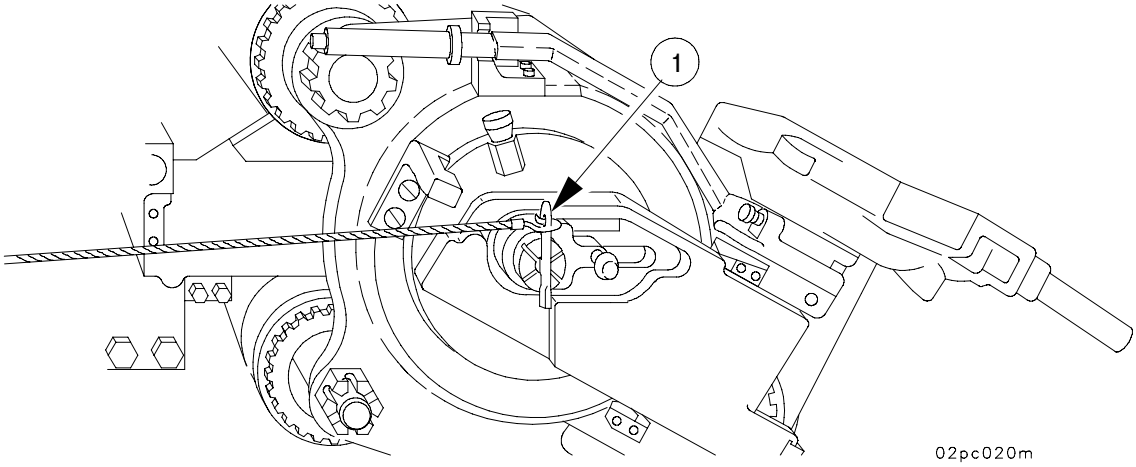

## 2-17 FIRING 155MM CANNON - CONTINUED

b. At the command “FIRE”, cannoneer fires howitzer with continuous pull on lanyard.

**CAUTION**

When firing M203 charge, steps c(1) and (2) are critical to prevent breech sticking. If water is not plentiful, wipe tube gas check seat with damp rag instead of using swab.

c. After cannon returns to in-battery position, cannoneer performs the following:

(1) Swabs tube gas check seat and powder chamber. Uses swab and cleaning staff section.

**NOTE**

Chamber staff section may be used with staff section.

(2) Wipes outer edge of obturator spindle assembly, if required, with damp cotton rag (item 37, Appx D).

(3) Cleans primer vent hole, if required, in obturator spindle assembly with primer vent-seat brush and reamer.

(4) Cleans primer flame hole with vent-cleaning tool.

(5) AFTER looking through tube, announces “BORE CLEAR”, if bore is unobstructed.

**CAUTION**

Operate Personnel Fan (Exhaust) switch on the Accessory Control Box with the Vent Duct Control Handle in DOWN position for 2 minutes when crew members observe fumes, smoke or indication of carbon monoxide build up in the crew compartment.

d. If howitzer fails to fire, refer to para 2-19.

Tube Temperature Sensor (TTS) will tell you on the DU if your tube is COLD, WARM, or HOT. If a WARM or HOT tube condition exists, you can determine the safe time in tube by the fire mission display. The safe time in tube tells you the number of minutes you have to fire the weapon, starting from the time the projectile is loaded. You must keep track of the time when the projectile is loaded so that you fire within the time prescribed by the TTS.

## 2-17 FIRING 155MM CANNON - CONTINUED

The safe time in tube for a WARM or HOT tube is dependent upon the ambient temperature. The AFCS/PDFCS/TTS uses the powder temperature as the ambient temperature.

Safe time in WARM tube temperature indicators:

WARM 20 - Safe time in tube 20 min
WARM 15 - Safe time in tube 15 min
WARM 10 - Safe time in tube 10 min
WARM 05 - Safe time in tube 5 min

It is important to update your powder temperature on a frequent basis IAW unit SOP so that the TTS will give the correct reading.

If the Tube Temperature Sensor (TTS) is inoperative, then any tube that causes water from a wet swab to boil, fry, or steam off when placed just forward of gas check seat is a hot tube.

**NOTE**

In combat emergency, commander will determine if hot tube procedures will be followed.

**HOT TUBE PROCEDURES**

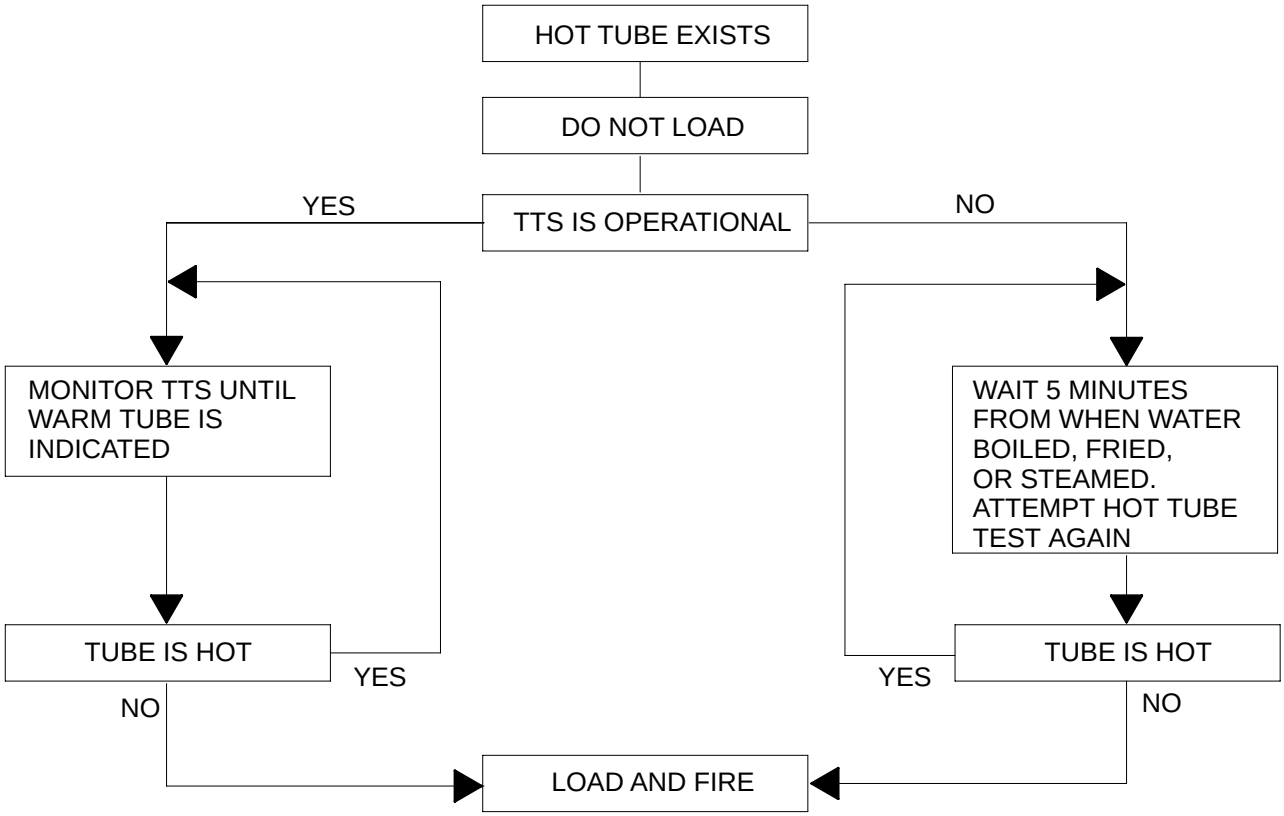

## 2-18 UNLOADING 155MM CANNON.

**WARNING**

Before attempting to unload cannon, see MISFIRE/CHECKFIRE PROCEDURES in para 2-19.

**CAUTION**

Do not use bell rammer to unload the M712 Copperhead projectile.

**NOTE**

- A complete round, once loaded, should always be fired in preference to being unloaded.
- For unloading or extracting an M712 Copperhead projectile, see or refer to para 5-25.

a. Unloading is supervised by chief of section.

b. The command “UNLOAD” is given by chief of section who then inspects bell rammer to make sure it is free from obstructions.

**WARNING**

Never stand directly behind cannon when unloading.

c. Cannoneer slides block assembly (1) to right and removes primer (2).

d. Gunner depresses cannon to zero elevation.

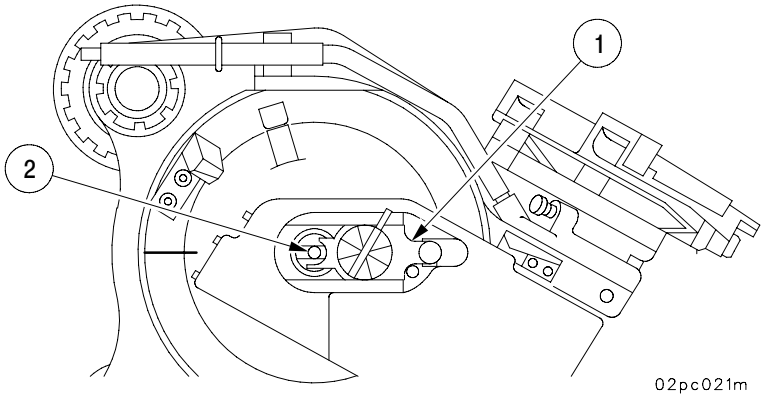

## 2-18 UNLOADING 155MM CANNON - CONTINUED

e. Gunner opens breechblock (3), gunner removes propellant (4) and hands it to cannoneer.

f. Gunner places rags or other waste material in propellant chamber. He closes breechblock (3).

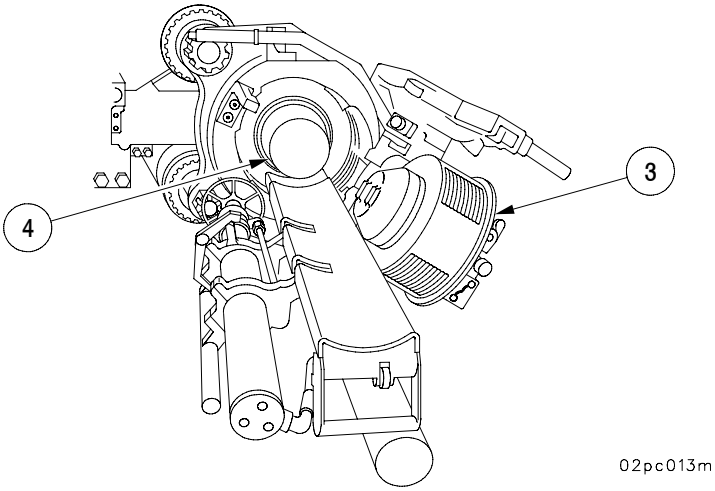


**WARNING**

- Make sure that bell rammer, P/N 8767210, is used.
- Projectiles and fuzes that have been rammed and then removed from tube must NOT be reloaded and fired. They must be turned over to authorized personnel for destruction or demilitarization. Only an M712 Copperhead projectile that has been rammed and extracted from a COLD TUBE may be reused if within 30 days (refer to para 5-26).

g. Cannoneer and driver assemble seven rammer staffs with bell rammer. They insert bell rammer into muzzle end of tube, and push carefully until bell rammer head encircles fuze and is seated against projectile. They steadily increase pressure by tapping rammer staff with a wooden block until projectile is loose.

h. When projectile is loosened, cannoneer and driver suspend operation of rammer. Chief of section has breech opened, and rags or waste removed, by gunner. Gunner then places rammer tray in position to receive projectile.

i. Cannoneer and driver steadily push projectile out of breech and onto rammer tray.

j. Projectile is then disposed of as directed.

## 2-18 UNLOADING 155MM CANNON - CONTINUED

### UNLOADING PROCEDURES FOR MACS PROPELLING CHARGE ONLY

a. Slide firing mechanism block assembly left to eject primer, then slide firing mechanism block assembly right to firing position.

b. Open breech block assembly.

**NOTE**

MACS increments must be removed one at a time.

c. Lift increment out of the swiss notch by using the thin black charge separator as a tool. Slide the separator along the side of the increment then under to lift it up and out of the swiss notch.

d. If MACS charge two or higher was loaded into the weapon, elevate the cannon as needed to get the increments to slide back into the swiss notch. Repeat step c. for each increment.

e. Follow instruction in previous section for unloading the projectile after MACS has been removed.

## 2-19 MISFIRE/CHECKFIRING PROCEDURES.

Conditions described here are rarely encountered when authorized and properly maintained ammunition is fired in properly maintained and operated weapon. However, to avoid injury to personnel and damage to equipment, all personnel must clearly understand the following:

a. What is involved when this weapon fails to fire.

b. What should be done when failure to fire occurs.

**WARNING**

- Do not load more than two increments of M231.
- Do not use Charge 1 or 2 green bag, M3A1.
- Do not use Charge 1 or 2, M232/M232A1.
- When authorized rates of fire for howitzer are exceeded, propelling charge cook-offs may occur within 1 minute after chambering. If firing in hot tube status, propelling charge cook-off may occur within 1 minute after chambering. AFCS/PDFCS/TTS will indicate hot, warm, or cold tube. If TTS is operational, use temperature readout to determine tube condition and safe time in tube.

c. Authorized Rates of Fire. If TTS is operational, you may fire at any rate of fire as long as TTS does not indicate HOT tube condition (see HOT tube procedures, para 2-17). If AFCS/PDFCS/TTS is inoperable, authorized rates are as follows:

Maximum rate: 4 rds/min. for 3 minutes
Sustained rate: 1 rd/min.

### 2-19.1 Definitions.

a. Checkfire. Checkfire is command given in emergency by anyone present who observes an unsafe act.

**NOTE**

The TTS will indicate a cold, warm, or hot tube. If AFCS/PDFCS/TTS is inoperable, the definitions below will apply.

b. Cold Tube. Any tube that has, or has not, exceeded rates of fire and that does not cause water from a wet swab to boil, fry, or steam off when placed just forward of gas check seat.

c. Warm Tube. Any tube that causes water from a wet swab to steam, not boil or fry when placed just foward of gas check seat.

d. Hot Tube. Any tube that causes water from a wet swab to boil, fry, or steam off when placed just forward of gas check seat.

## 2-19 MISFIRE/CHECKFIRING PROCEDURES - CONTINUED

### 2-19.1 Definitions - Continued

e. Cook off. A cook off occurs when the propelling charge is ignited by excessive tube heat.

f. Hangfire. A hangfire is a delay in action by the igniter or propelling charge. This delay, though unpredictable, ranges from fractions of a second to 10 minutes.

g. Misfire. A misfire occurs when the weapon does not fire after an attempt to fire. Its cause may be failure of primer, igniter, propelling charge, or firing mechanism to function. A misfire in itself is not dangerous, but it cannot be immediately distinguished from a hangfire.

**WARNING**

Removal of the primer is dangerous when a sticker occurs. When the firing block is released, the primer shoots rearward at very high speed, injuring personnel standing in its path. Stand clear of all recoiling parts to avoid personnel injury.

h. Sticker. A sticker is a projectile that is lodged in the tube after normal functioning of the ignition train. When stickers occur, gases under high pressure are retained in the chamber.

## 2-19 MISFIRE/CHECKFIRING PROCEDURES - CONTINUED

### 2-19.2 Cold Tube Misfire/Checkfire Procedures.

If you get a cold tube failure-to-fire, follow YES/NO procedure below to clear weapon.

**WARNING**

- Keep weapon trained on target. Evacuate all personnel except COS and cannoneer.
- Stay clear of recoiling parts and don't put hand behind primer vent.
- The primer can be expelled rearward should there be a sticker.
- When opening the breech to remove the powder charge and if smoke/sparks are coming from the chamber area, do not attempt to remove the charge or close the breech. Immediately evacuate the vehicle through the gunner's escape hatch, commander's cupola, or cab side doors, but not the hull rear door. Notify EOD.

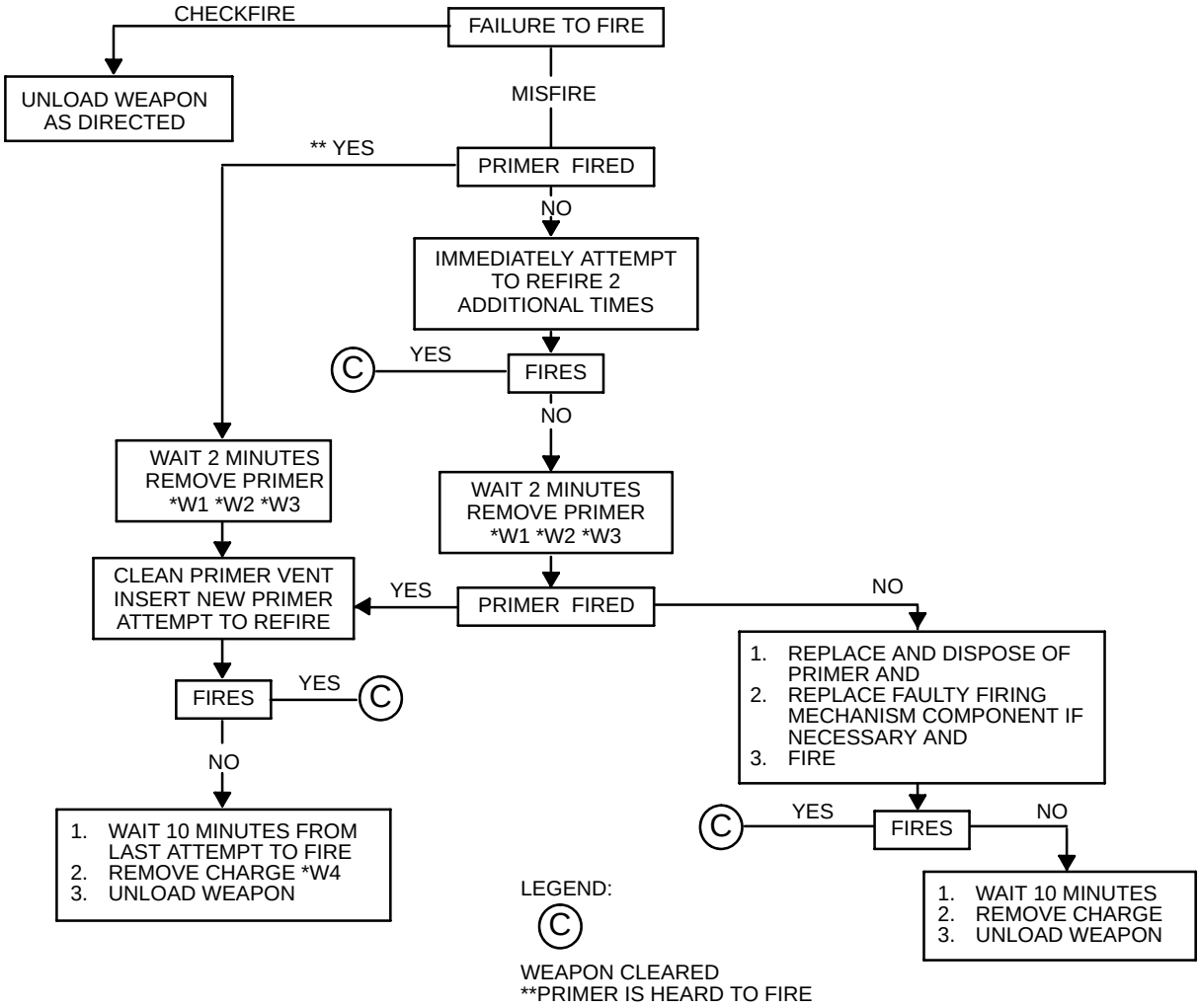

## 2-19 MISFIRE/CHECKFIRING PROCEDURES - CONTINUED

### 2-19.3 Warm Tube Misfire/Checkfire Procedures.

If you get a warm tube failure-to-fire, follow YES/NO procedure below to clear weapon.

**WARNING**

- Keep weapon trained on target. Evacuate all personnel except COS and No. 1 cannoneer.
- Stay clear of recoiling parts and don't put hand behind primer vent.
- The primer can be expelled rearward should there be a sticker.
- Never fire a projectile or charge that has been allowed to cool in a heated tube. Separate them and mark both unserviceable.

**NOTE**

Warm tube misfire/checkfire procedures will only be used with an operable AFCS/PDFCS/TTS. If AFCS/PDFCS/TTS is inoperable, use definition for hot and cold tube to determine misfire/checkfire procedure to follow.

# 2-19 MISFIRE/CHECKFIRING PROCEDURES - CONTINUED

## 2-19.3 Warm Tube Misfire/Checkfire Procedures - Continued

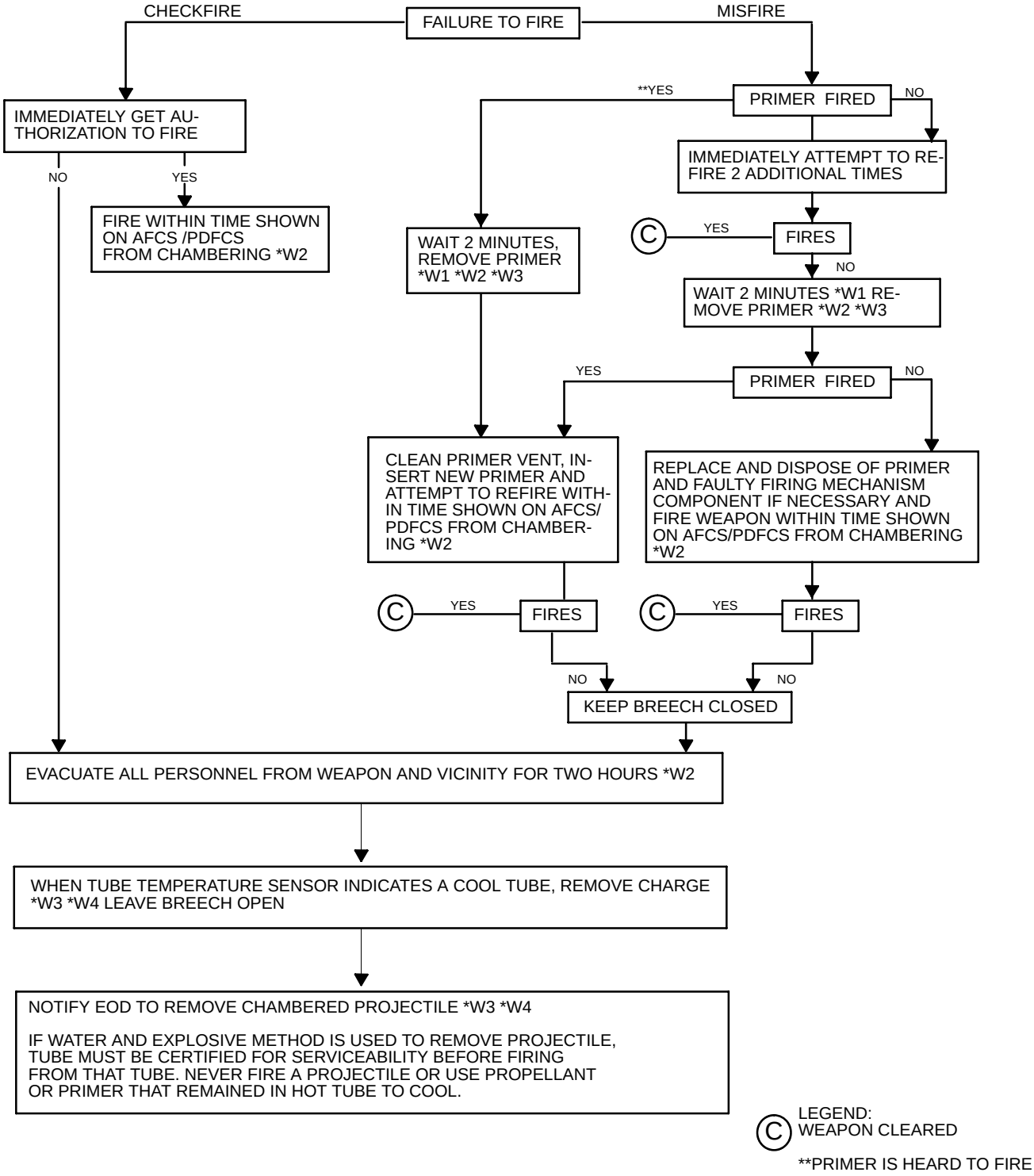

## 2-19 MISFIRE/CHECKFIRING PROCEDURES - CONTINUED

### 2-19.4 Hot Tube Misfire/Checkfire Procedures.

If you get a hot tube failure-to-fire, follow YES/NO procedure below to clear weapon.

**WARNING**

- Do not fire a hot tube except in a combat emergency.
- W1 Charge cook-off possible after 1 minute.
- W2 Do not take cover directly to rear of weapon.
- W3 Do not fire the unloaded primer and charge. Separate them and mark both unserviceable.
- If you see any liquid dripping from or puddling in the tube, assume it is melted high explosive leaking from the projectile. Do not fire the weapon until it is cleaned thoroughly.

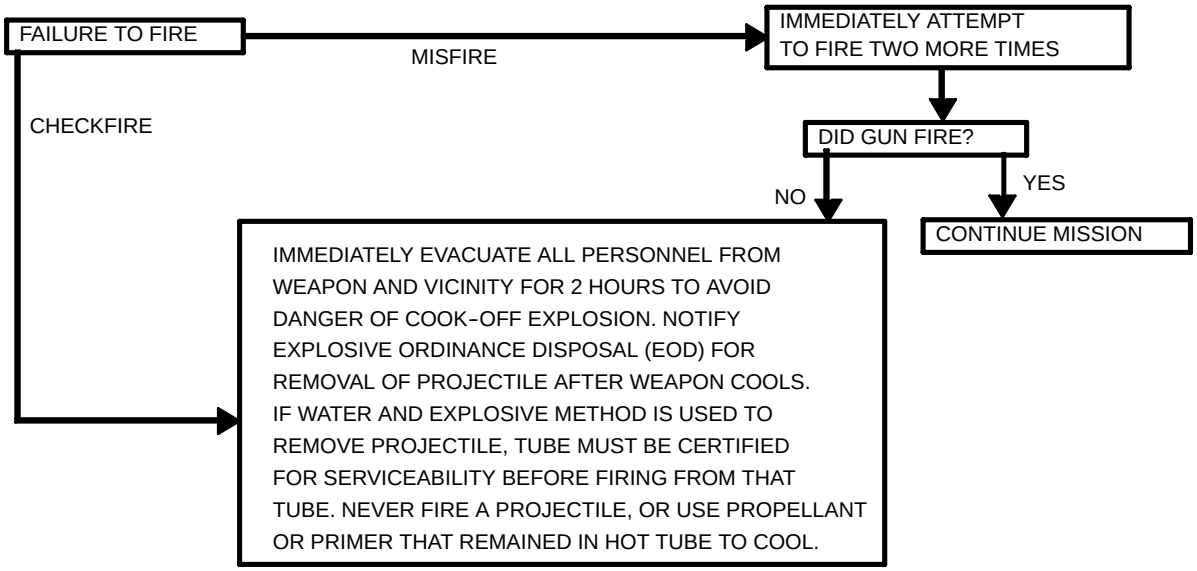


## 2-20 DUDS.

**WARNING**

Do not touch, move, or otherwise handle duds. Their fuzes may be armed. Have duds destroyed in place by authorized personnel only.

## 2-21 PREPARATION FOR TRAVEL (MARCH ORDER).

March order and preparation of howitzer for travel is accomplished under supervision of chief of section. When movement is ordered, chief of section commands MARCH ORDER and gives movement orders to ATC.

**WARNING**

Projectiles and fuzes that have been rammed and then removed from tube must NOT be reloaded and fired. They must be turned over to authorized personnel for destruction or demilitarization. Only an M712 Copperhead projectile that has been rammed and extracted from a COLD TUBE may be reused within 30 days (refer to para 5-26).

a. Chief of section commands “MARCH ORDER”.

b. Chief of section inspects chamber to see that howitzer is not loaded, supervises work of section, checks all ammunition not fired that has been prepared for firing, before it is replaced in containers. He checks that powder increments prepared for firing are present in proper condition, are of same lot number as container, and are assembled in proper numeric order. He checks all time/proximity fuzes that have been set to see that they are reset to shipping and storage setting, and that eyebolt lifting plugs are replaced on all unfuzed projectiles. He also checks that supplementary charges that have been withdrawn are replaced and that grommets have been replaced on rotating bands of all projectiles not stored inside howitzer.

c. Gunner covers vials on telescope mount and turns ballistic shield to face full left, secures and locks.

d. Cannoneer ensures bore is clear and secures power rammer and closes breechblock, replaces unused primers in traveling compartment, secures swab, cleaning materials, and places vent and primer seat cleaning tools in oddment tray.

e. Gunner and cannoneer check that all projectiles stowed on board are secure and have either authorized fuze or lifting plug firmly installed.

f. Driver assists in reloading ammunition and section equipment, secures communication equipment, and replaces muzzle cover.

g. Driver disassembles and secures rammer staff sections, and secures BII.

h. Driver and chief of section stow tube in travel position (para 2-8.20). Chief of section places HYDRAULIC POWER switch to OFF.

i. Gunner locks cab traverse lock.

## 2-21 PREPARATION FOR TRAVEL (MARCH ORDER) - CONTINUED

**WARNING**

Two personnel must guide driver when backing up (para 2-8.11).

j. Chief of section, along with the assistance of the cannoneer, directs the driver to back against spades. When driver has backed against spades, gunner steps on left and right pedal. Then the chief of section directs the driver to pull forward off the spades, until the spades clear the spade holes.

k. Chief of section and cannoneer lift left spade into travel position. Gunner closes rear hull door, then steps on right pedal latch.

l. Chief of section and cannoneer lift right spade into travel position. Gunner opens rear hull door.

m. Chief of section checks left and right locking latches for complete engagement. Replaces left and right spade safety pins. Cannoneer secures left and right strut.

n. Cannoneer secures collimator if used and hands it to driver who stores it.

o. Gunner verifies all section equipment is present and secure.

p. Entire section takes their posts and cannoneer closes rear hull door.

q. Chief of section verifies howitzer is prepared for traveling and reports “NUMBER (SO AND SO) IN ORDER” or reports any defect section cannot correct without delay.

## 2-22 OPERATING AUXILIARY EQUIPMENT.

### 2-22.1 Operating Personnel Heater.

**WARNING**

Do not place flammable materials or explosives on or near personnel heater. To prevent injury to personnel and damage to equipment, do not block or restrict the heater vent.

**NOTE**

- These operating procedures are for vehicles with Accessory Control Box P/N 12268582.
- For vehicles with Accessory Control Box P/N 12268547, see sub-para 2-22.1.1.1 for operating procedures.

2-22.1.1 Starting.

a. Turn MASTER switch to ON.

b. Move HEATER SELECTOR switch (1) to LOW.

**CAUTION**

If recommended start times are exceeded, damage to the heater can result by burning out igniter or ignition control register. Steps b.1 and b.2 only apply to the global heater. Steps b.3 through step f only apply to the Hupp and Stewart-Warner heaters.

b.1 Push HEATER switch (2.1) to START and hold for four to seven seconds (no more than seven seconds, or global heater will go into an automatic shutdown/diagnosis mode). If heater detects a fault it will automatically shutdown. If this occurs, notify unit maintenance.

b.2 Push HEATER switch (2.1) to RUN once heater starts.

b.3 Push HEATER switch (2.1) to START and hold. Set HEATER switch to RUN once heater starts.

c. If heater does not start within 2 minutes, move HEAT SELECTOR switch (1) to OFF for 10 seconds, and then immediately back to LOW. The start attempt may be continued for 1 additional minute.

d. If heater has not started after step c, again move HEAT SELECTOR switch (1) to OFF for 10 seconds, and then immediately back to LOW, and another 1-minute start attempt may be made. This will make a total start time of 4 minutes. If heater has not started by this time, notify unit maintenance.

e. After the heater starts, it may be operated on either HIGH or LOW by positioning of the HEAT SELECTOR switch (1). Any time heater is started, it should be operated for at least 5 minutes to clear heater of all excess fuel introduced during starting.

f. The heater lamp (2) will illuminate when HEAT SELECTOR switch (1) is in LOW or HIGH position.

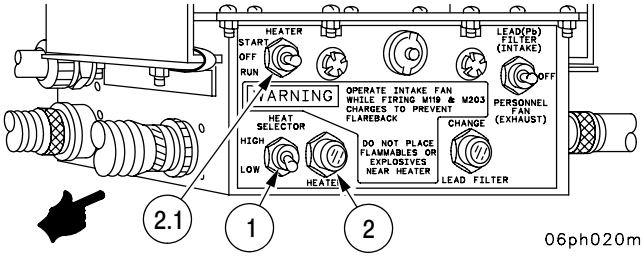

## 2-22 OPERATING AUXILIARY EQUIPMENT - CONTINUED

### 2-22.1 Operating Personnel Heater - Continued

2-22.1.2 Shutdown.

**WARNING**

Do not use the vehicle MASTER switch to shut the heater down. If the following instructions are not followed, fuel vapors may accumulate in the ventilating air circuit.

**CAUTION**

If proper shutdown procedures are not followed, heater may be damaged by reverse burning.

**Shutting Down Hupp and Stewart-Warner Heaters**

To stop personnel heater operation, move the HEATER switch (2.1) to the OFF position. The blower will continue to operate for approximately 3 minutes to allow the system to cool. If blower continues to operate or otherwise malfunctions, notify unit maintenance.

**Shutting Down Global Heaters**

Move HEATER switch (2.1) to OFF position. Global heater will enter purge mode and after four minutes it will automatically shut down.

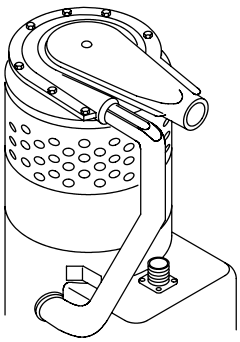

STEWART–WARNER

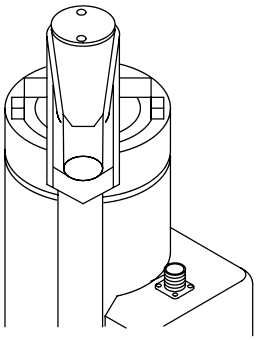

HUPP

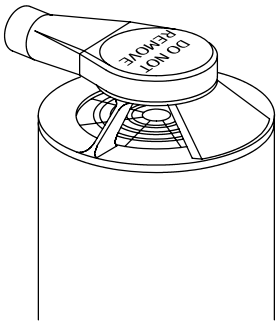


GLOBAL

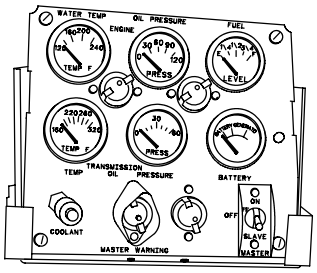


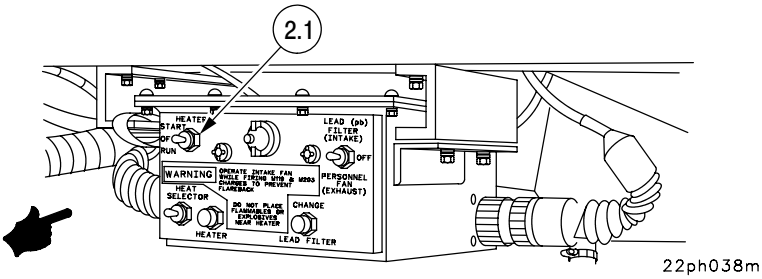

## 2-22 OPERATING AUXILIARY EQUIPMENT - CONTINUED

### 2-22.1.1 Operating Personnel Heater.

**WARNING**

Do not place flammable materials or explosives on or near personnel heater. To prevent injury to personnel and damage to equipment, do not block or restrict the heater vent.

**NOTE**

- These operating procedures are for vehicles with Accessory Control Box P/N 12268547.
- For vehicles with Accessory Control Box P/N 12268582, see sub-para 2-22.1 for the operating procedures.

2-22.1.1.1 Starting.

a. Turn MASTER switch to ON.

b. Move HEAT SELECTOR switch (1) to START.

**CAUTION**

If recommended start times are exceeded, damage to the heater can result by burning out igniter or ignition control register.

c. If heater does not start within 2 minutes, move HEATER control switch (1) to OFF for 10 seconds, and then immediately back to START. The start attempt may be continued for 1 additional minute.

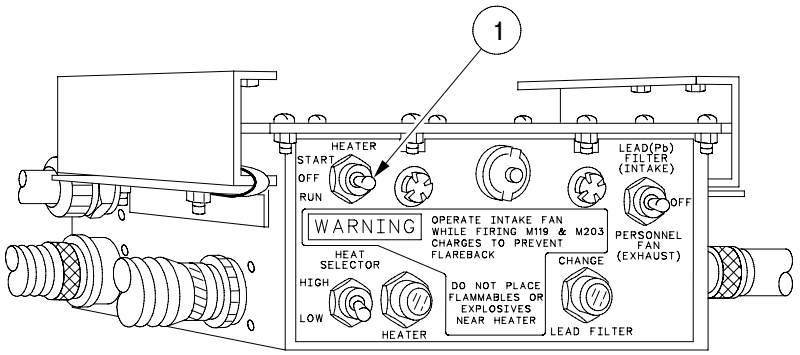


06ph021ma

# 2-22 OPERATING AUXILIARY EQUIPMENT - CONTINUED

## 2-22.1.1 Operating Personnel Heater - Continued

2-22.1.1.1 Starting - Continued

d. If heater has not started after step c, again move HEATER control switch (1) to OFF for 10 seconds, and then immediately back to START, and another 1-minute start attempt may be made. This will make a total start time of 4 minutes. If heater has not started by this time, notify unit maintenance.

e. After the heater starts, move HEATER control switch to RUN position. The heater may be operated on either HIGH or LOW by positioning of the HEAT SELECTOR switch (2). Any time heater is started, it should be operated for at least 5 minutes to clear heater of all excess fuel introduced during starting.

f. The heater lamp (3) will illuminate when HEATER control switch (1) is in START or RUN position.

2-22.1.1.2 Shutdown.

**WARNING**

Do not use the vehicle MASTER switch to shut the heater down. If the following instructions are not followed, fuel vapors may accumulate in the ventilating air circuit.

**CAUTION**

If proper shutdown procedures are not followed, heater may be damaged by reverse burning.

a. To stop heater operation, move HEATER control switch (1) to OFF. Blower will continue to operate for approximately 3 minutes to allow system to cool.

b. If blower continues to operate or otherwise malfunctions, notify unit maintenance.

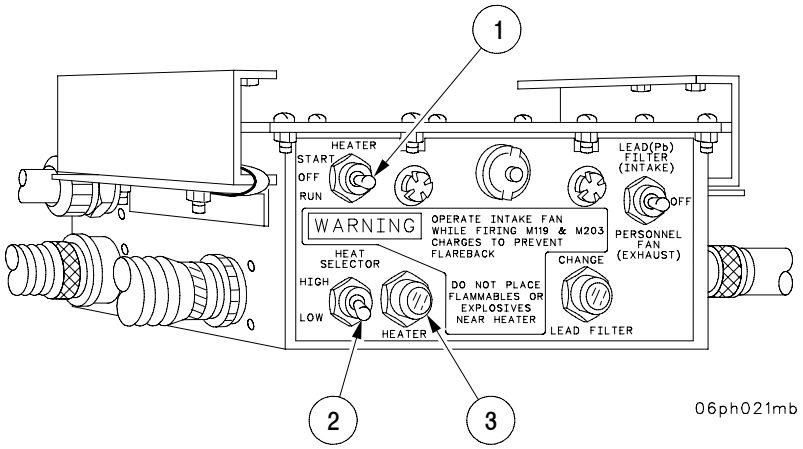

# 2-22 OPERATING AUXILIARY EQUIPMENT - CONTINUED

## 2-22.1.1 Operating Personnel Heater - Continued

2-22.1.1.3 Heater Operation Faults (Global A20)

Warning Faults

During operation, if an abnormal condition occurs, indicator light on heater control box will begin flashing and a code (07 or 14) will be displayed on diagnostic display. The heater will try to correct the fault. If fault cannot be corrected, heater will continue to operate until an unsafe condition or component failure FAULT occurs. Then heater will automatically shut down and a failure code will be displayed on the diagnostic display. (Refer to Table 1 Warning Faults). Go to para 3-4 and troubleshoot heater system.

Shutdown Faults

If, during operation, a shutdown fault occurs, the heater will immediately enter the shutdown and purge modes to avoid operating in an unsafe condition. The diagnostic display will display the fault mode and the control box indicator lamp will flash in cycle composing of one flash followed by a 2-second delay. Refer to Table 2 for Shutdown Faults. Then go to Table 3-1 and troubleshoot heater system.

| | |
|---|---|
| **E2** | Low Fuel Pressure |
| **F3** | Heat Limit |
| **F6** | Ambient Over Temperature |

**Table 1. WARNING Faults**

| | |
|---|---|
| **C3** | Vent Fan Fault |
| **E1** | Low Voltage |
| **E3** | Low Burner Air Flow |
| **F1** | Ignition Overtime |
| **F2** | Burner Flameout |
| **F4** | Vent Air Overheat |
| **F7** | Exhaust Overheat |

**Table 2. SHUT DOWN Faults**

If any other codes are displayed, notify unit maintenance.

# 2-22 OPERATING AUXILIARY EQUIPMENT - CONTINUED

## 2-22.1.1 Operating Personnel Heater - Continued

2-22.1.1.4 Emergency Shutdown

**WARNING**

In the event of an emergency shutdown, DO NOT TOUCH the heater or heat exchanger until it has had sufficient time to cool. Serious injury or burns could result.

**NOTE**

The heat exchanger remains at full temperature and the heater will not have completed a purge cycle.

In the event of an unsafe condition, and the heater does not automatically shutdown or respond to the manual shutdown procedure, and an emergency shutdown is required, perform the following sequence:

a. Disconnect the power circuit breaker to the heater.

b. Disconnect the heater power by detaching the MS power connection from the heater.

Manual Purge

a. Move START/OFF/RUN switch (1) to OFF position.

b. Move START/OFF/RUN switch (1) on heater control box (2) momentarily to START position for at least 10 seconds, then to OFF. This will allow heater to purge. (This will take approximately four minutes.)

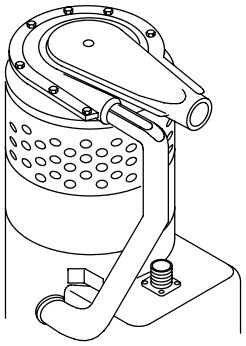

STEWART-WARNER

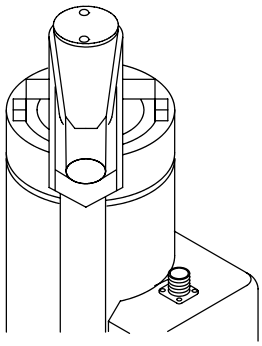

HUPP

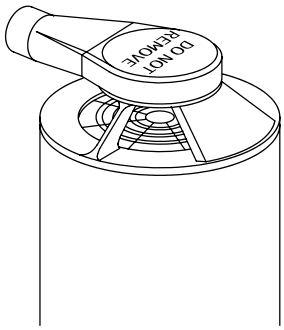


GLOBAL

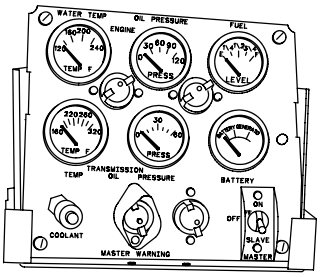


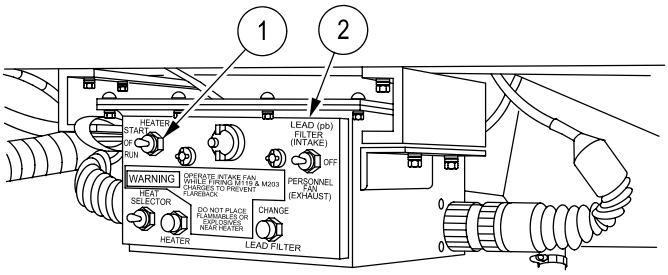


22ph039m

## 2-22 OPERATING AUXILIARY EQUIPMENT - CONTINUED

### 2-22.2 Operating Lead Filter and Ventilation System.

a. To pull in fresh air to vehicle interior:

(1) Turn MASTER switch (1) ON.

(2) Ensure air duct control handle (2) in driver's compartment is in the up position.

(3) Move ventilation fan selector switch (3) to LEAD FILTER (INTAKE). Air will be pulled in through air intake/exhaust duct grille (4) and filtered out through lead filter element (5).

(4) If CHANGE LEAD FILTER indicator lamp (6) illuminates during air intake mode, move the ventilation fan selector switch (3) to OFF and notify Unit Maintenance.

**NOTE**

Lead particulate filter system is serviced by Unit Maintenance.

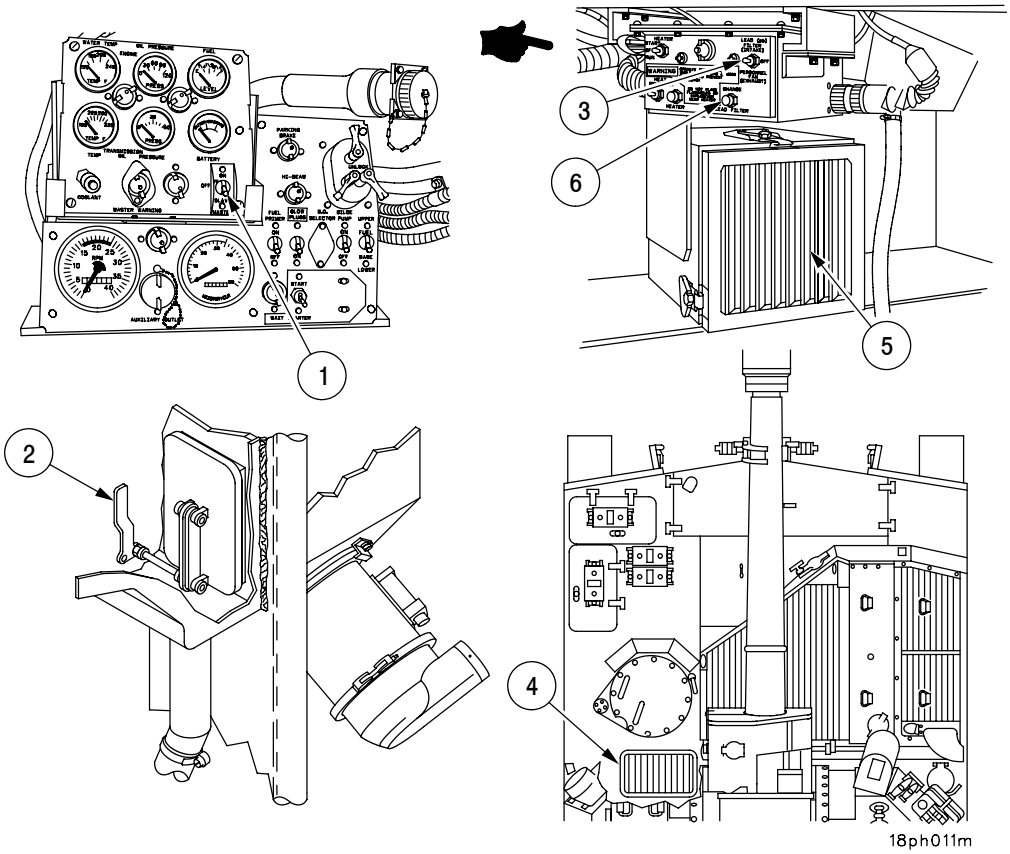

## 2-22 OPERATING AUXILIARY EQUIPMENT - CONTINUED

### 2-22.2 Operating Lead Filter and Ventilation System - Continued

b. To ventilate smoke/fumes from vehicle interior:

(1) Turn MASTER switch (1) ON.

(2) Pull down air duct control handle (2) in driver's compartment to open door (3).

(3) Move ventilation fan selector switch (4) to PERSONNEL FAN (EXHAUST). The EXHAUST indicator lamp (5) will illuminate. Smoke and fumes will be pulled from vehicle interior by the ventilation blower (6) and exhausted through the air intake/exhaust duct grille (7).

(4) If the EXHAUST indicator lamp (5) fails to illuminate, move ventilation fan selector switch (4) to OFF and notify unit maintenance.

**CAUTION**

Operate Personnel Fan (Exhaust) switch on the Accessory Control Box with the Vent Duct Control Handle in DOWN position for 2 minutes when crew members observe fumes, smoke or indication of carbon monoxide build up in the crew compartment.

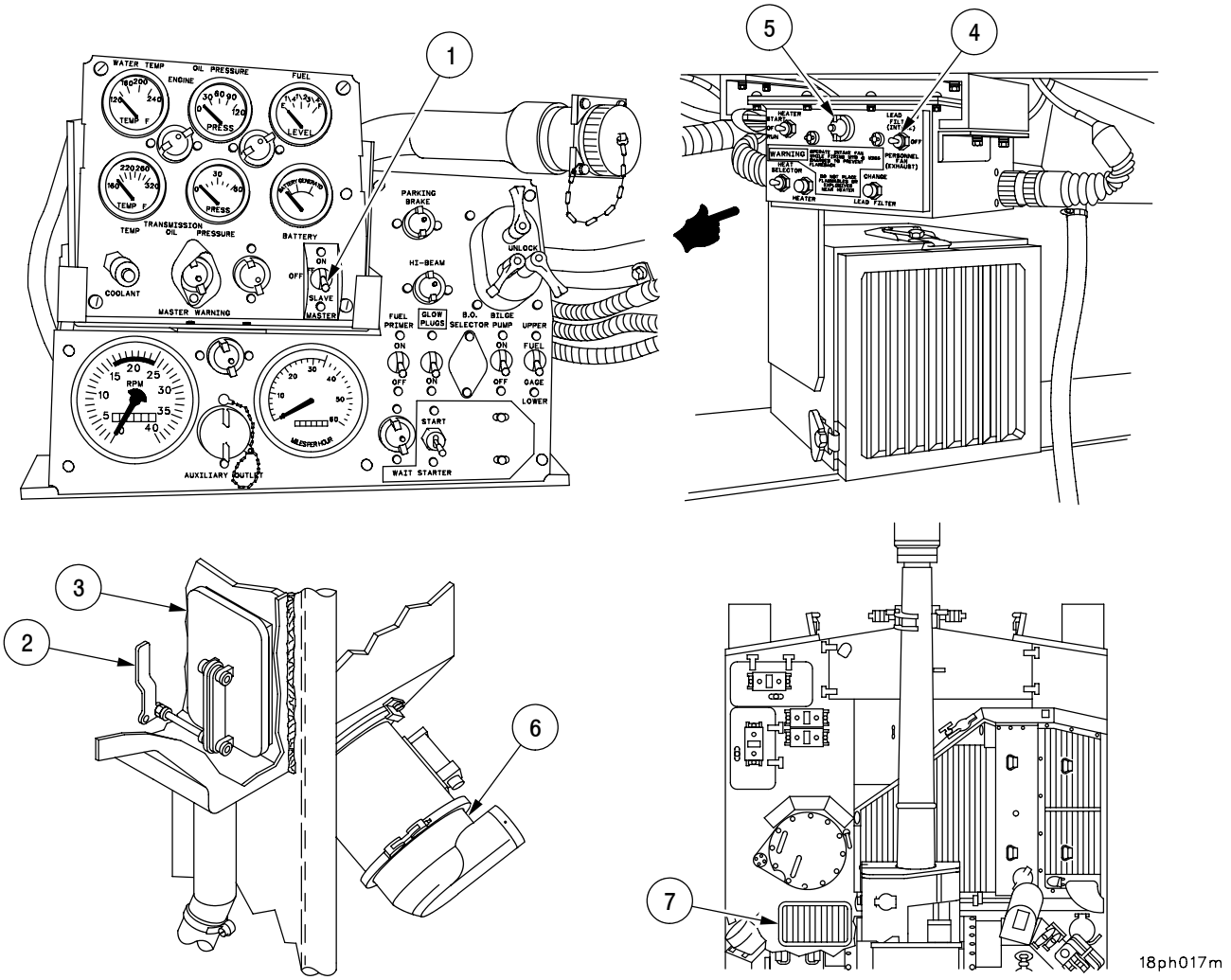

## 2-22 OPERATING AUXILIARY EQUIPMENT - CONTINUED

### 2-22.3 Operating M93 Chronograph Muzzle Velocity Sensor (MVS).

**WARNING**

Electrical power shall be removed (off) before disconnecting or connecting electrical connectors or removing or installing units or components. Inadvertent contact with voltages present may be fatal. Connector pins may be dammaged by arcing.

**CAUTION**

The transeiver is suseptible to electrostatic discharge.

2-22.3.1 General.

The MVS is a muzzle velocity measurement system which operates on the Doppler Principle. The system is based on an X band transceiver and a muzzle velocity processor. The purpose of the M93 MVS is to provide accurate muzzle velocity reading for a projectile fired from the howitzer. The M93 MVS is designed to communicate measured projectile velocities via a Military Standard - 1533 Data Bus to the M109A6 Paladin Automatic Fire Control System (AFCS). This information can be used to provide a reasonable estimate of the average muzzle velocity for rounds to be fired for a new fire mission, thereby improving the possibility of a first round hit on the target.

2-2.3.2 Description of System.

The MVS system consists of the following components:

a. M93 Radar Antenna Transceiver.

b. W92 Power/Data cable.

c. Mounting bracket with 1553 Bus terminator and storage connector.

d. W93A (1553 Bus) cable assembly (connects MVS to AFCS).

When not in use, the MVS can remain installed on the howitzer. If the MVS is not mounted on the howitzer, ensure that the termination connector is installed on the wiring harness W93A connector at the MVS mounting bracket. If the MVS must be stored it will be IAW TM 9-1290-356-14 & P. The MVS must be re-installed and connected prior to turning the vehicle MASTER power switch ON.

2-22.3.3 Purpose of MVS Equipment.

The purpose of the M93 MVS is to provide an accurate muzzle velocity reading for a projectile fired from a gun. The M93 MVS is designed to communicate measured projectile velocities, via a MIL-STD-1553 Data Bus to the M109A6 Paladin Automatic Fire Control System. This information can be used to provide a reasonable estimate of the average muzzle velocity for rounds to be fired for a new mission, thereby improving the possibility of a first round hit on the target.

## 2-22 OPERATING AUXILIARY EQUIPMENT - CONTINUED

### 2-22.3 Operating M93 Chronograph Muzzle Velocity Sensor (MVS) - Continued

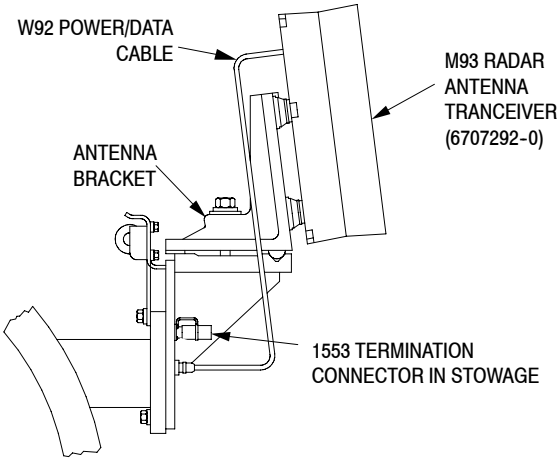


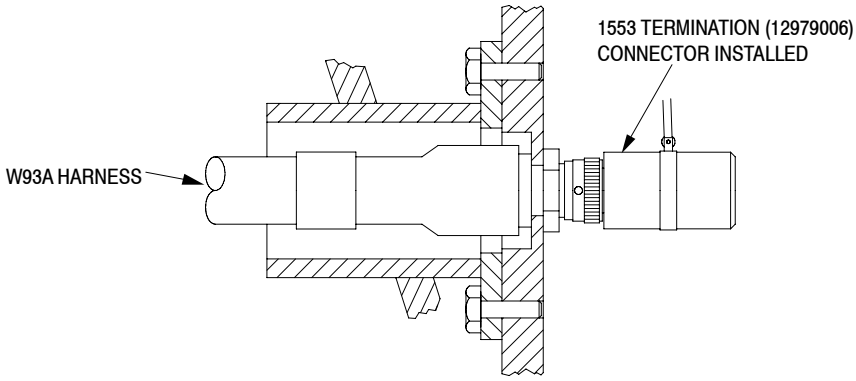


2-22.3.4 Environmental Information.

The M93 MVS is designed to withstand adverse conditions which may be present during storage and operation. The M93 MVS will function properly without degradation under the following conditions:

a. Operating temperatures from -50° to +125° F.
b. Storage temperatures from -50° to +150° F.
c. 0% to 95% relative humidity, including condensation.
d. Shocks and vibrations present during fire and transport.
e. High altitude during air transport.
f. Rain, wind, sand and dust.
g. Solar radiation (direct sunlight).
h. Salt and fog.
i. Environmentals leading to growth of fungus.

# 2-22 OPERATING AUXILIARY EQUIPMENT - CONTINUED

## 2-22.3 Operating M93 Chronograph Muzzle Velocity Sensor (MVS) - Continued

2-22.3.5 M93 MVS Installation Procedures.

### NOTE

- M93 MVS must be installed and connected prior to turning the vehicle MASTER power switch ON.
- Normally, the M93 MVS will not require cleaning of any internal parts because it is sealed against dirt and moisture. For cleaning instructions see Appendix K.

a. Ensure vehicle MASTER switch (1) is in the “OFF” position.

b. Inspect M93 radar antenna head (2) for physical damage. Install antenna bracket (3) on mounting bracket (4).

c. Remove 1553 Bus terminator (5) from W93A cable connector (6) and connect to storage connector (7).

d. Inspect W92 cable (8) and W93A cable for nicks, cracks, pinched, crimped or broken wires and all connectors for bent pins, broken or cracked couplings and other damage.

e. Connect W92 cable (8) to M93 radar antenna (2) and W93A cable connector (6) and ensure all connectors are tight.

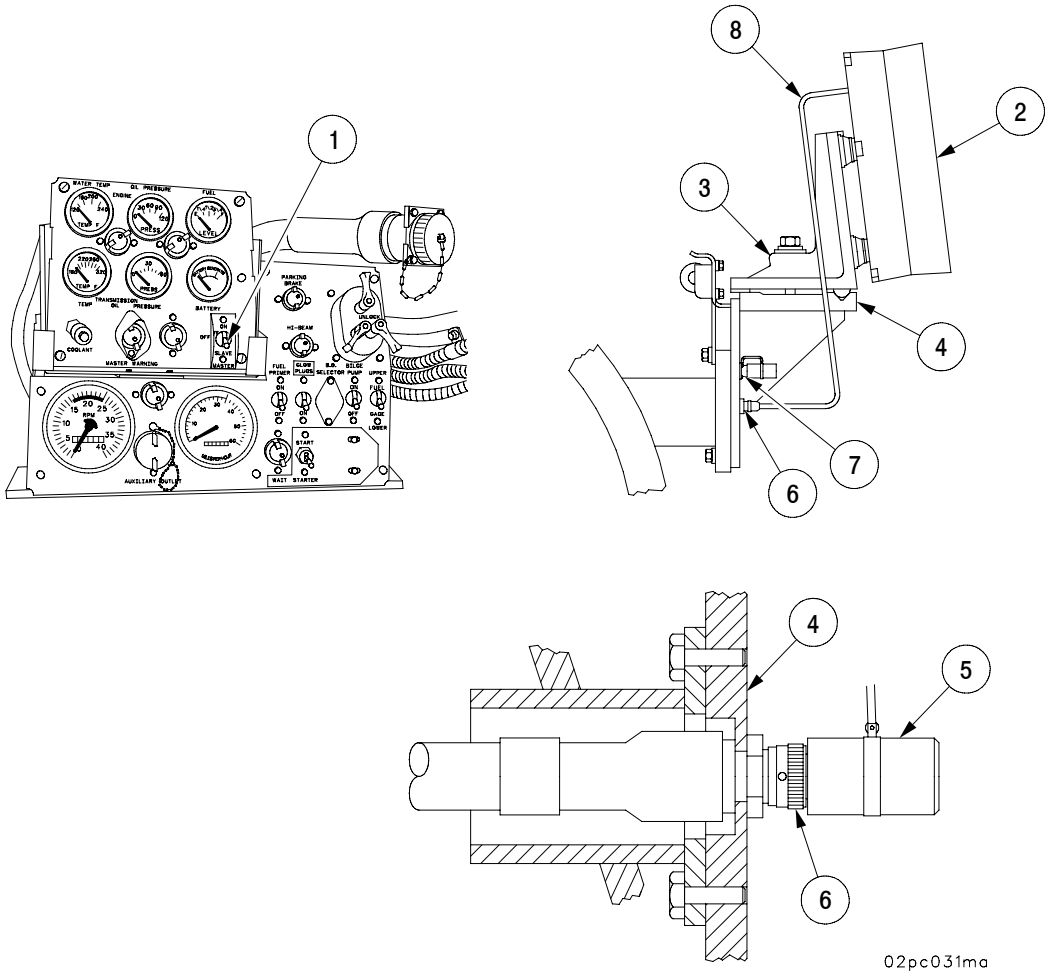

## 2-22 OPERATING AUXILIARY EQUIPMENT - CONTINUED

### 2-22.3 Operating M93 Chronograph Muzzle Velocity Sensor (MVS) - Continued

2-22.3.6 Operational Sequence.

Chief Of Section (COS) duties:

a. Power-up the AFCS.

b. Check AFCS status.

c. Initialize AFCS.

**NOTE**

To use the MVV, you must have an extended lot code in the AFCS inventory.

d. Enter extended propellant lots.

e. Enter the minimum number of rounds for MVV calculation as directed by the Tactical Standard Operating Procedures (TSOP).

f. Prepare for Platoon Operation Center (POC)/Battery Computer System (BCS) sends Fire Missions digitally.

**NOTE**

The AFCS will calculate a solution; the AFCS will report an MVV to POC if certain requirements are met:

- AFCS processing a new MVV.
- Deletion of an MVV.
- If +/-2 meters per second change from previous MVV.

The AFCS must detect readings within +/-100 meters per second from standard. Additionally, the AFCS will not generate an MVV unless the “MVV ROUND” entry has been met or exceeded. The AFCS sends the MVV automatically to the POC/BCS. Once the AFCS receives acknowledgement from the BCS the system will apply the new MVV to the database.

## 2-22 OPERATING AUXILIARY EQUIPMENT - CONTINUED

### 2-22.3 Operating M93 Chronograph Muzzle Velocity Sensor (MVS) - Continued

2-22.3.7 Calibration Procedures.

**NOTE**

M93 MVS must be installed and connected prior to turning the vehicle MASTER power switch ON.

a. Initialize the AFCS at an SCP.

b. Receive a move order to a firing area and perform occupation procedures.

c. Do a navigation update at an SCP (if necessary).

d. Receive BCS PROVIDED AMMO from POC (one time only).

e. Enter/verify extended lot for propellant.

f. Set MVV ROUNDS as directed.

g. Enter current propellant temperature.

h. POC will request MVV's from AFCS (transparent to operator).

i. From SET UP AND INFORMATION menu, select AFCS STATUS and ensure MVS is operational.

j. From MAINTENANCE menu, select BORESIGHT entry and verify the AZ offset, roll offset, and the elevation offset against the DA Form 2408-4 Weapon Record Data (platoon sergeant is responsible for checking this data).

k. Ensure borescope and pullover has been performed.

l. Ensure a minimum of 50 meters between guns.

m. Once everything is verified, conduct firing missions. (POC sends a WHEN READY digital fire mission).

n. To view the MV acquired on the AFCS, EOM must first be sent. At EOM go to SETUP AND INFORMATION menu. Select MUZZLE VELOCITY and then select VIEW LAST MISSION DATA.

**NOTE**

For a more accurate MVV, ensure tube is warm or a warm up round has been fired.

## 2-22 OPERATING AUXILIARY EQUIPMENT - CONTINUED

### 2-22A.3 Operating Paladin Muzzle Velocity System (PMVS).

**WARNING**

Electrical power shall be removed (off) before disconnecting or connecting electrical connectors or removing or installing units or components. Inadvertent contact with voltages present may be fatal. Connector pins may be damaged by arcing.

**CAUTION**

The transceiver is susceptible to electrostatic discharge.

2-22A.3.1 General.

The PMVS is a muzzle velocity measurement system that operates on the Doppler Principle. The purpose of the PMVS is to provide accurate muzzle velocity reading for a projectile fired from the howitzer. This information can be used to provide a reasonable estimate of the average muzzle velocity for rounds to be fired for a new fire mission, thereby improving the possibility of a first round hit on the target.

2-22A.3.2 Description of System.

The PMVS system consists of the following components:

a. Antenna/Processing unit.

b. W92A Power/Data cable.

c. Mounting bracket with W92A and dummy connector.

d. W93B cable assembly (connects PMVS to PDFCS).

When not in use, the PMVS can remain installed on the howitzer. If the PMVS is not mounted on the howitzer, make sure the wiring harness W92A P1 is installed in the dummy connector at the PMVS. If the PMVS must be stored it will be IAW Appendix E. The PMVS must be re-installed and connected to the PDFCS prior to turning the vehicle MASTER power switch ON.

2-22A.3.3 Purpose of PMVS Equipment.

The purpose of the PMVS is to provide an accurate muzzle velocity reading for a projectile fired from a gun. The Doppler radar antenna transmits a microwave CW signal, receives the echoed signal from the projectile, and subtracts the transmitted signal from the received signal generating the Doppler signal. The Doppler signal is amplified and transferred to the digital processing part of the system.

The analog signal is converted to a digital representation and transmitted to the PDCU via the serial interface and also stored internally for later readout. This information can be used to provide a reasonable estimate of the average muzzle velocity for rounds to be fired for a new mission, thereby improving the possibility of a first round hit on the target.

# 2-22 OPERATING AUXILIARY EQUIPMENT - CONTINUED

## 2-22A.3 Operating Paladin Muzzle Velocity System (PMVS) - Continued

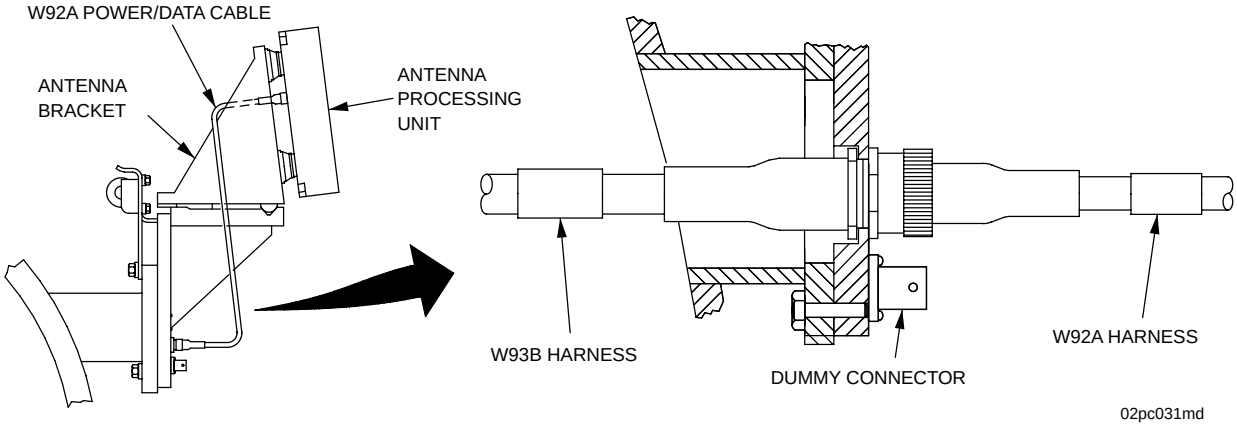


2-22A.3.4 Environmental Information.

The PMVS is designed to withstand adverse conditions which may be present during storage and operation. The PMVS will function properly without degradation under the following conditions:

a. Operating temperatures from -50° to +125° F.

b. Storage temperatures from -50° to +150° F.

c. 0% to 95% relative humidity, including condensation.

d. Shocks and vibrations present during fire and transport.

e. High altitude during air transport.

f. Rain, wind, sand and dust.

g. Solar radiation (direct sunlight).

h. Salt and fog.

i. Environmentals leading to growth of fungus.

# 2-22 OPERATING AUXILIARY EQUIPMENT - CONTINUED

## 2-22A.3 Operating Paladin Muzzle Velocity System (PMVS) - Continued

2-22A.3.5 PMVS Installation Procedures.

### NOTE

- PMVS must be installed and connected prior to turning the vehicle MASTER power switch ON.
- Normally, the PMVS will not require cleaning of any internal parts because it is sealed against dirt and moisture. For cleaning instructions see Appendix K.1.

a. Make sure vehicle MASTER switch (1) is in the “OFF” position.

b. Inspect Antenna/Processing unit (2) for physical damage. Install antenna bracket (3) on mounting bracket (4).

c. Inspect W92A cable (5) for nicks, cracks, pinched, crimped or broken wires and all connectors for bent pins, broken or cracked couplings and other damage.

d. Disconnect W92A cable (5) from dummy connector (6) and connect W92A cable (5) to Antenna/Processing unit (2).

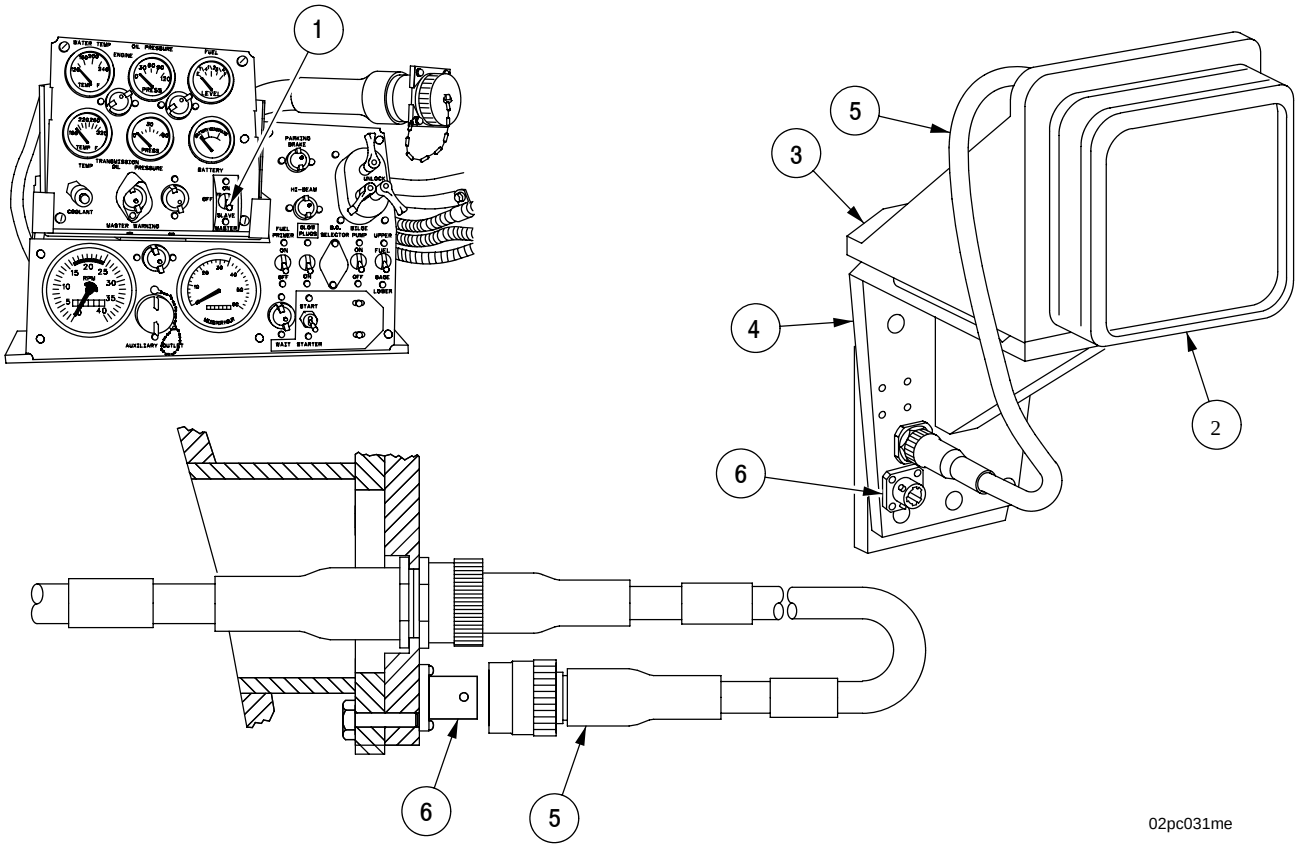

# 2-22 OPERATING AUXILIARY EQUIPMENT - CONTINUED

## 2-22A.3 Operating Paladin Muzzle Velocity System (PMVS) - Continued

2-22A.3.6 Operational Sequence.

Chief Of Section (COS) duties:

a. Power-up the PDFCS.

b. Check PDFCS status.

c. Initialize PDFCS.

**NOTE**

To use the MVV, you must have an extended lot code in the PDFCS inventory.

d. Enter extended propellant lots.

e. Enter the minimum number of rounds for MVV calculation as directed by the Tactical Standard Operating Procedures (TSOP).

f. Prepare for Platoon Operation Center (POC)/Battery Computer System (BCS) sends Fire Missions digitally.

**NOTE**

The PDFCS will calculate a solution; the PDFCS will report an MVV to POC if certain requirements are met:

- PDFCS processing a new MVV.
- Deletion of an MVV.
- If +/-2 meters per second change from previous MVV.

The PDFCS must detect readings within +/-100 meters per second from standard. Additionally, the PDFCS will not generate an MVV unless the “MVV ROUND” entry has been met or exceeded. The PDFCS sends the MVV automatically to the POC/BCS. Once the PDFCS receives acknowledgement from the BCS the system will apply the new MVV to the database.

# 2-22 OPERATING AUXILIARY EQUIPMENT - CONTINUED

## 2-22A.3 Operating Paladin Muzzle Velocity System (PMVS) - Continued

2-22A.3.7 Calibration Procedures.

**NOTE**

PMVS must be installed and connected prior to turning the vehicle MASTER power switch ON.

a. Initialize the PDFCS at an SCP.
b. Receive a move order to a firing area and perform occupation procedures.
c. Do a navigation update at an SCP (if necessary).
d. Receive BCS PROVIDED AMMO from POC (one time only).
e. Enter/verify extended lot for propellant.
f. Set MVV ROUNDS as directed.
g. Enter current propellant temperature.
h. POC will request MVVs from PDFCS (transparent to operator).
i. From SET UP AND INFORMATION menu, select PDFCS STATUS and ensure PMVS is operational.
j. From MAINTENANCE menu, select BORESIGHT entry and verify the AZ offset, roll offset, and the elevation offset against the DA Form 2408-4 Weapon Record Data (platoon sergeant is responsible for checking this data).
k. Ensure borescope and pullover has been performed.
l. Ensure a minimum of 50 meters between guns.
m. Once everything is verified, conduct firing missions. (POC sends a WHEN READY digital fire mission.)
n. To view the MV acquired on the PDFCS, EOM must first be sent. At EOM go to SETUP AND INFORMATION menu. Select MUZZLE VELOCITY and then select VIEW LAST MISSION DATA.

**NOTE**

For a more accurate MVV, ensure tube is warm or a warm up round has been fired.

## 2-22 OPERATING AUXILIARY EQUIPMENT - CONTINUED

### 2-22.4 Operation of Radio and Intercommunication Equipment.

2-22.4.1 General.

a. The vehicle is equipped with the vehicle intercommunications system (VIS) AN/VIC-3(V)-6. The AN/VIC-3(V)-6 improves vehicle communication among crewmembers by using: audio feedback within the helmets to reduce noise interference, advanced technology to increase audio clarity, and built-in-test equipment to aid in diagnostic and troubleshooting problems within the VIS. Refer to TM 11-5830-263-10 for operations, troubleshooting, and maintenance of AN/VIC-3(V)-6.

b. The Master Control Station (MCS) CD-82/VCR can be programmed to control communications between stations and allow access of the crew stations to the on-board radios. It checks for the normal response from each FFCS and radio interface for comparison with the system configuration stored in memory.

c. The Full Function Crew Station (FFCS) C-12357/VRC is used to interface the chief of section's and crew's intercom headsets to the MCS.

d. The loudspeaker LS-688/VRC enables crewmembers without headsets to monitor intercom or radio traffic. When the vehicle is stationary it allows radio and intercom monitoring outside of the vehicle.

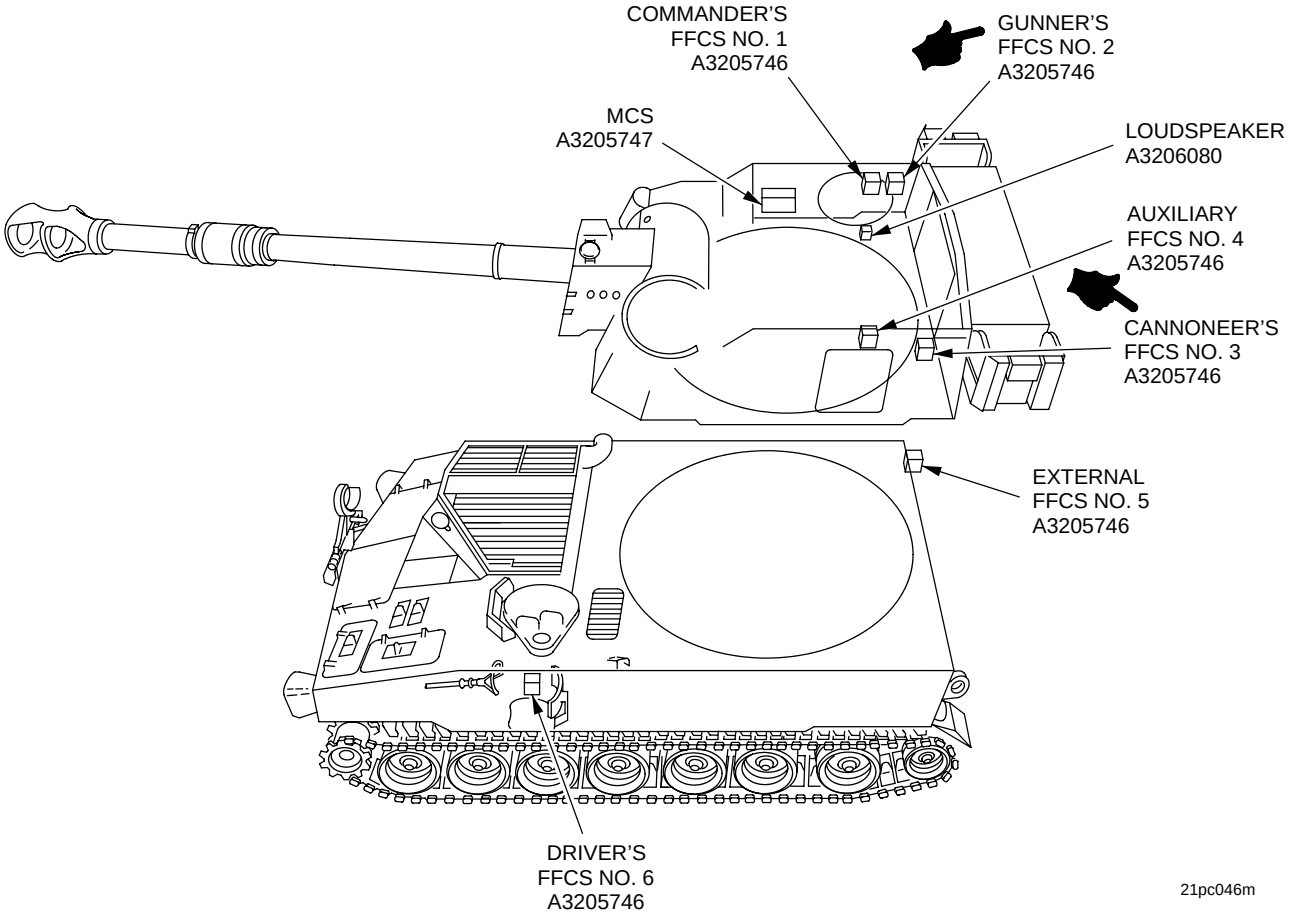

# 2-22 OPERATING AUXILIARY EQUIPMENT - CONTINUED

## 2-22.4 Operation of Radio and Intercommunication Equipment - Continued

2-22.4.2 Purpose of Communications Equipment.

The basic communications location diagrams illustrate the equipment interconnections. This equipment provides the following capabilities:

a. The chief of section can communicate via his Combat Vehicle Crewman (CVC) helmet headset to his crew over the intercom. Two-way communication is possible.

b. The chief of section and crewmembers can transmit/receive over the radio using the intercom.

c. The AFCS/PDFCS can transmit/receive digital messages via the radio to and from the BCS or LCU.

d. The chief of section can monitor radio communications between the AFCS/PDFCS and BCS or LCU.

e. The chief of section has the capability to isolate intercom communications from radio traffic so that both can operate independently.

f. The DU controls the operation of the AFCS/PDFCS and provides the chief of section with a means of entering data into the system (keyboard) and obtaining and displaying mission commands and data. The AFCS/PDFCS communicates via the radio (or wire lines) using digital data.

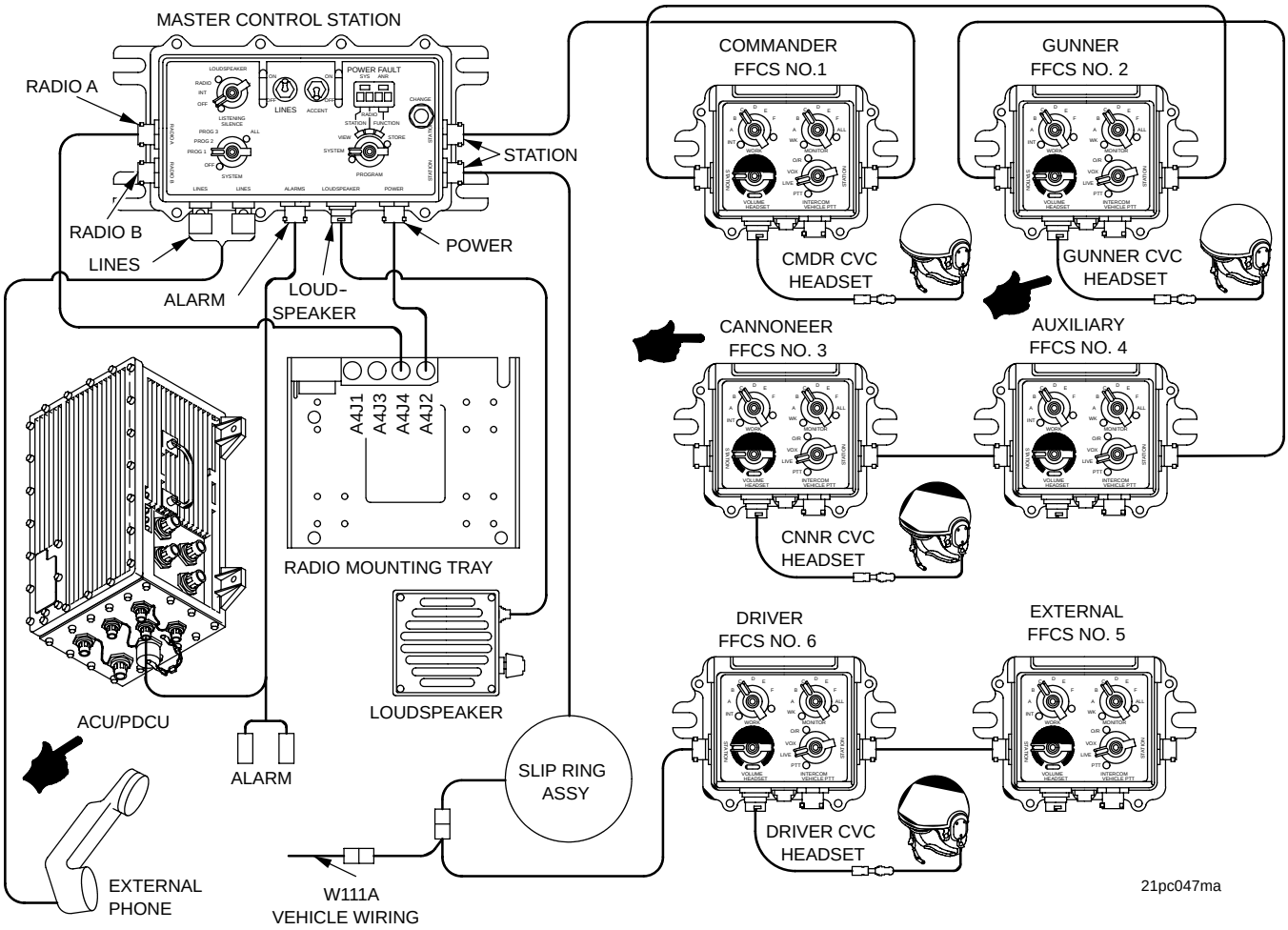

# 2-22 OPERATING AUXILIARY EQUIPMENT - CONTINUED

## 2-22.4 Operation of Radio and Intercommunication Equipment - Continued

2-22.4.3 Communication Equipment Manuals.

Refer to TM 11-206 for interphone controls C-980/U and C-981/U.

Refer to TM 11-5820-890-10 for Radio Set AN/VRC-89A.

Refer to TM 11-5830-263-10 for operation and maintenance of vehicle intercommunications system AN/VIC-3(V)-6.

2-22.4.4 Communication Equipment.

a. Master Control Station (MCS) CD-82/VRC

The MCS is the central node of the VIS, connecting directly to vehicle prime power and providing the rest of the system with regulated power. The MCS is normally mounted near the commander's FFCS to allow the commander to program the radio management system according to the requirements of each crewmember. The MCS provides connections for two radio transceivers, vehicle alarms, a loudspeaker, and a pair of field wires (used to connect to a field telephone or to another intercom system). The MCS provides a regulated power supply to the major VIS components and to Active Noise Reduction (ANR) circuits in helmets outfitted with this capability. The unit has an internal protection system designed to survive large voltage or current transients that may be present on the power lines. If a system power fault occurs, the MCS removes power from the system and the System Power Fault LED illuminates. If a fault occurs with the ANR power, the MCS removes power from all ANR headsets and the ANR Power Fault LED illuminates.

The VIS interconnecting cables, hereinafter referred to as highway cables, are connected to each component of the vehicle intercom system using the two STATION connectors. The MCS enables the commander to select the system operating mode and to program the level of radio access available at each crew station. The MCS's programming capability allows for various communication configurations. The commander has three program modes that he can preset: PROG 1, PROG 2, and PROG 3. Nonvolatile memory stores programming information so the system can be turned off without losing any preset programming information.

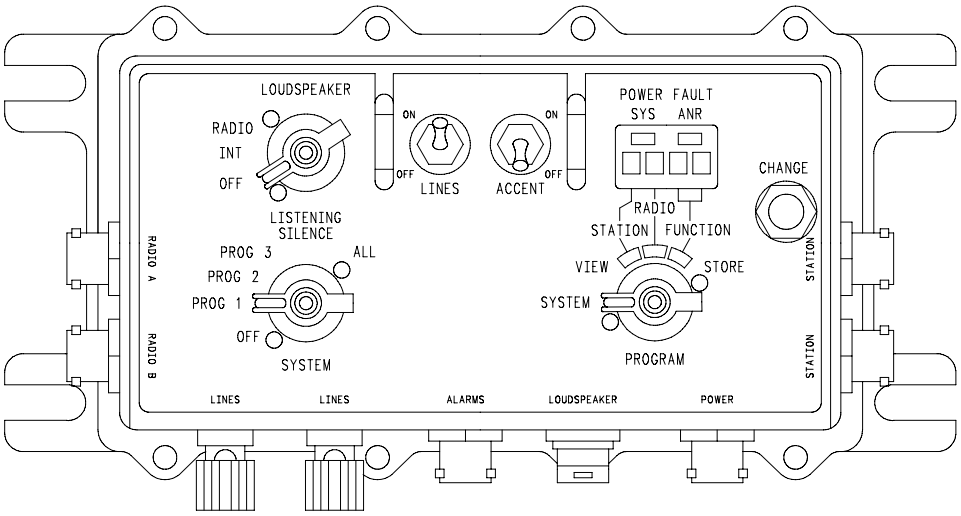


21pc024m

# 2-22 OPERATING AUXILIARY EQUIPMENT - CONTINUED

## 2-22.4 Operation of Radio and Intercommunication Equipment - Continued

2-22.4.4 Communication Equipment - Continued

b. Full Function Crew Station (FFCS) C-12357/VRC

The FFCS is the interface between the VIS system and a single headset. The FFCS allows independent control of headset volume. It also provides the crewmember with access to the intercom channel and up to six on-board radios, subject to the system operating mode and MCS radio access programming. The crewmember can monitor any or all radios in addition to transmitting on any one selected radio (with the further option of eliminating or continuing intercom communication).

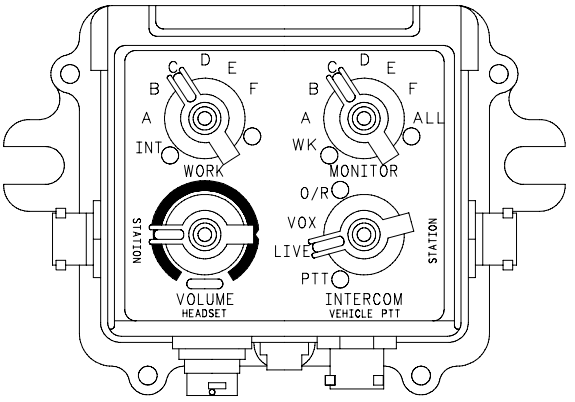


21pc011m

c. Loudspeaker (LS) -LS-688/VRC

The LS unit consists of: mounting bracket (1), cable and connector assembly (2), volume control with on/off switch (3), and speaker cone housed in a casing (4). The front face of the casing has rows of louvered slots covering the majority of its surface area. This louvered front face protects the speaker from rain, dirt, and debris. It connects to the MCS's LOUDSPEAKER connector or any crew station HEADSET connector through either a 6 foot or 30 foot cable. The loudspeaker attaches to its mounting bracket with a large wing nut. This allows removal from the bracket and unrestricted placement anywhere inside or outside the vehicle (within reach of the cable).

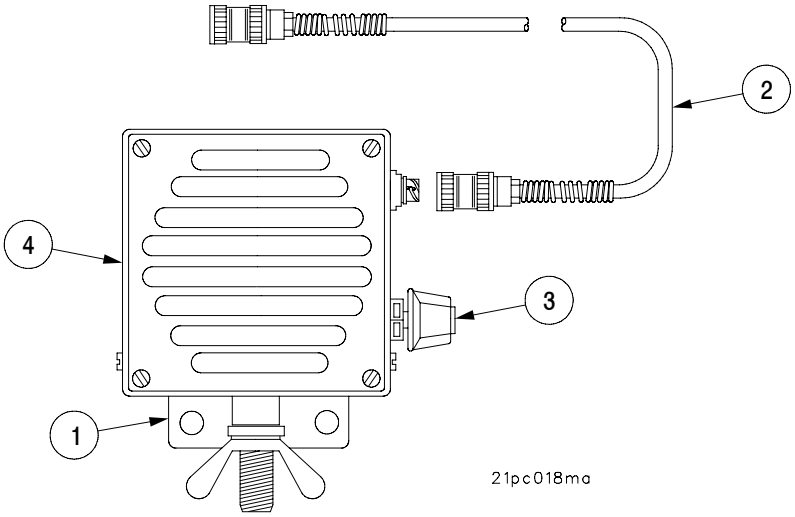


21pc018ma

## 2-22 OPERATING AUXILIARY EQUIPMENT - CONTINUED

### 2-22.4 Operation of Radio and Intercommunication Equipment - Continued

2-22.4.4 Communication Equipment - Continued

d. Combat Vehicle Crewman's (CVC) Headset

The CVC headset is a headset compatible with the DH-132 ballistic helmet shell. Small, medium, and large sizes are available. The liner for each size contains fire-resistant fabric and bump-protection foam. It adjusts to fit individual heads by means of front and rear straps. The adjustable chin strap is provided to ensure a tight fit for proper ANR operation. The helmet has two rigid, contoured, noise-attenuating earcups that fit into the helmet liner and can rotate to ensure proper sealing to the head.

The microphone and headset communications kit consists of a noise-cancelling microphone mounted on an adjustable wire boom off the right earcup. The left earcup has a three-position PTT switch mounted on the outside. The switch is spring-loaded to the center (disabled) position. The switch also has a momentary forward push-to-talk (PTT) position and a fixed rear live intercom position. Each earcup contains an independent Active Noise Reduction (ANR) system in addition to the Passive Noise Reduction (PNR) provided by earcup acoustic attenuation. The ANR/PNR selection switch is on the right earcup. The ANR system, which is activated when the switch is in the rear position, reduces background noise within each earcup. Noise cancellation circuitry of the microphone reduces the noise level entering the intercom system, permitting better voice intelligibility. The headset is connected to VIS via a standard audio connector and bailout cable which incorporates a quick-disconnect bailout connector to enable rapid disconnection from the system. The bailout cable provides all electrical interfaces between the CVC headset and its crew station.

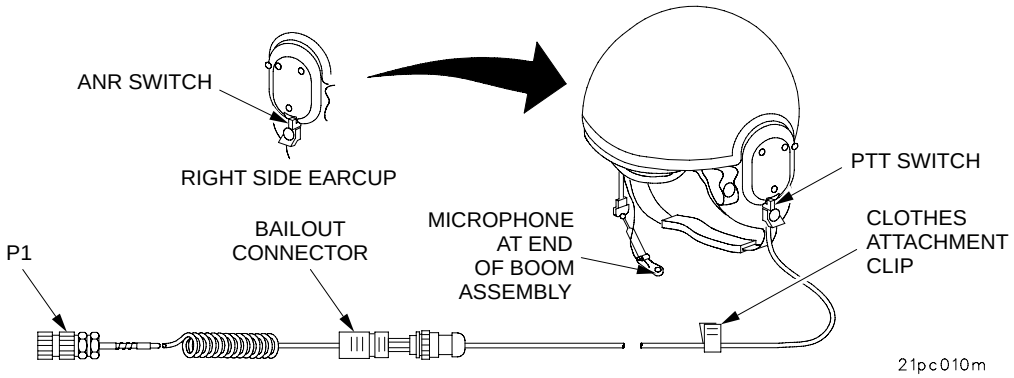


**Table 2-2. CVC Headset Major Components and Function**

| COMPONENT | FUNCTION |
|---|---|
| Microphone | Inputs crewmember audio communication into intercom or radio channel. |
| PTT switch | Used when transmitting on intercom channel (fixed position) or radio (momentary position). Center position is used to listen to intercom and/or radio. |
| Clothes attachment clip | Used to dress headset cable out of way to prevent entanglement or interference. |
| Bailout connector | Provides quick-disconnect for crewmember. |
| P1. | Standard audio cable connector interfaces headset with an FFCS or MOS. |
| ANR switch | Used to reduce vehicle noise heard by crewman (rear position). |

# 2-22 OPERATING AUXILIARY EQUIPMENT - CONTINUED

## 2-22.4 Operation of Radio and Intercommunication Equipment - Continued

2-22.4.5 Operation.

### NOTE

Complete operating instructions for the radio set AN/VRC-89A are in TM 11-5820-890-10.

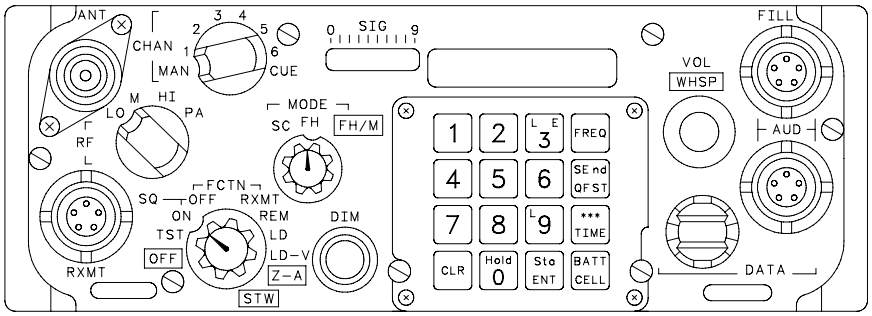


21pc014m

The communication equipment can be operated in the following ways:

a. Voice.

| EQUIPMENT | CONTROL | SETTING |
|---|---|---|
| FFCS<br>C-12857/VRC | WORK<br>MONITOR<br>INTERCOM<br>VOLUME | A<br>ALL<br>LIVE OR VOX<br>ADJUST |
| MCS<br>CD-82/VRC | SYSTEM<br>PROGRAM<br>LOUDSPEAKER<br>LINES | PROG1<br>SYSTEM<br>RADIO<br>OFF |
| RADIO VRC-89A<br>APPLIQUE | RF<br>MODE<br>FCTN<br>VOL<br>CHAN | LO (NORMAL OPERATION)<br>FH<br>SQ ON<br>ADJUST<br>SET TO NET FREQUENCY |
| PORTABLE<br>CONTROL<br>PANEL | DRIVER'S<br>MASTER<br>SWITCH | ON |

# 2-22 OPERATING AUXILIARY EQUIPMENT - CONTINUED

## 2-22A.4 Operation of Radio and Intercommunication Equipment - Continued

2-22A.4.5 Operation - Continued

b. Intercom only.

| EQUIPMENT | CONTROL | SETTING |
|---|---|---|
| FFCS<br>C-12857/VRC | WORK<br>MONITOR<br>INTERCOM<br>VOLUME | INT<br>WK<br>LIVE OR VOX<br>ADJUST |
| MCS<br>CD-82/VRC | SYSTEM<br>PROGRAM<br>LOUDSPEAKER | PROG1<br>SYSTEM<br>INT |
| PORTABLE<br>CONTROL<br>PANEL | DRIVER'S<br>MASTER<br>SWITCH | ON |

c. BCS-to-AFCS/PDFCS (digital data).

| EQUIPMENT | CONTROL | SETTING |
|---|---|---|
| RADIO VRC-89A | RF<br>MODE<br>PWR FCTN<br>VOL<br>CHAN | LO (NORMAL OPERATION)<br>FH<br>SQ ON<br>ADJUST<br>SET TO NET FREQUENCY |
| PORTABLE<br>CONTROL<br>PANEL | DRIVER'S<br>MASTER<br>SWITCH | ON |
| AFCS/PDFCS | DU POWER<br>SWITCH | ON |

# 2-22 OPERATING AUXILIARY EQUIPMENT - CONTINUED

## 2-22.4 Operation of Radio and Intercommunication Equipment - Continued

2-22.4.5 Operation - Continued

**NOTE**

The only time the COS would have to monitor BCS-to-AFCS/PDFCS traffic is when the platoon is using the same frequency for voice and digital or when one radio is out and they must use one radio for both voice and digital.

d. Chief of Section Monitors BCS-to-AFCS/PDFCS (Always Performed Before Making Voice Transmission to POC).

| EQUIPMENT | CONTROL | SETTING |
|---|---|---|
| MCS<br>CD-82/VRC | SYSTEM<br>PROGRAM<br>LOUDSPEAKER<br>LINES | PROG1<br>SYSTEM<br>RADIO<br>OFF |
| FFCS<br>C-12857/VRC | MONITOR<br>VOLUME<br>WORK | ALL<br>ADJUST<br>A |
| RADIO VRC-89A | RF<br>MODE<br>FCTN<br>VOL<br>CHAN | LO<br>FH<br>SQ ON<br>ADJUST<br>SET TO FDC FREQUENCY |
| PORTABLE<br>CONTROL<br>PANEL | DRIVER'S<br>MASTER<br>SWITCH | ON |
| AFCS/PDFCS | DU POWER<br>SWITCH | ON |

e. Chief of Section Talks to POC by Radio (Chief of Section Always Monitors BCS-to-AFCS/PDFCS Before Transmitting).

| EQUIPMENT | CONTROL | SETTING |
|---|---|---|
| MCS<br>CD-82/VRC | SYSTEM<br>PROGRAM<br>LOUDSPEAKER<br>LINES | PROG1<br>SYSTEM<br>RADIO<br>OFF |
| FFCS<br>C-12837/VRC | MONITOR<br>VOLUME<br>WORK | ALL<br>ADJUST<br>A |
| RADIO VRC-89A | RF<br>MODE<br>FCTN<br>VOL<br>CHAN | LO<br>FH<br>SQ ON<br>ADJUST<br>SET TO FDC FREQUENCY |
| PORTABLE<br>CONTROL<br>PANEL | DRIVER'S<br>MASTER<br>SWITCH | ON |
| AFCS/PDFCS | DU POWER<br>SWITCH | ON |

## 2-22 OPERATING AUXILIARY EQUIPMENT - CONTINUED

### 2-22.5 Operating Fire Extinguishing System (FES).

**WARNING**

- The Fire Extinguishing System does not work properly with the engine running.
- Open doors and hatches and exit vehicle if possible. Ventilate before re-entry.
- Fire extinguisher $CO_2$ can cause performance degradation, headache, and dizziness. Do not bang or drop cylinder.
- Immediately notify other crewmembers, particularly the driver, of fire detection and intent to use the portable extinguisher $CO_2$.
- Open doors and hatches and exit vehicle if possible. Ventilate vehicle before re-entry.
- If not possible to exit vehicle, ensure vent blower is on.

Shut down engine. Manually discharge FES into engine compartment by pulling either of the two handles (1 or 2).

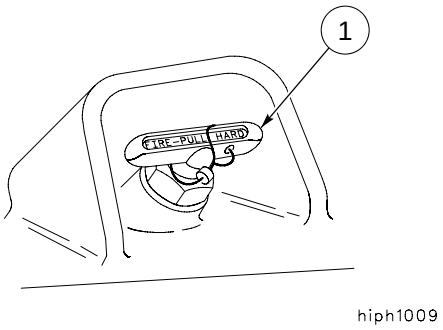


EXTERNAL: Located to left rear of driver's hatch.

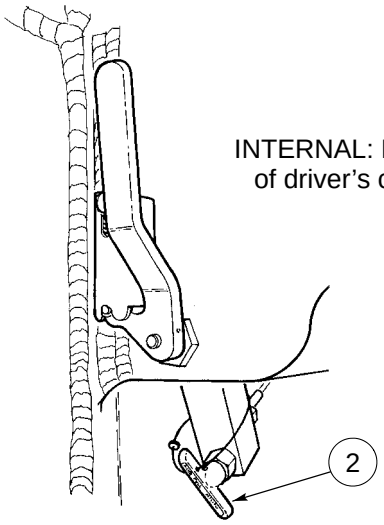


INTERNAL: Located to rear of driver's compartment.

## 2-22 OPERATING AUXILIARY EQUIPMENT - CONTINUED

### 2-22.6 Operating Portable Fire Extinguishers.

a. Pull latch (1) and remove fire extinguisher (2).

b. Break safety wire and remove safety pin (3).

c. Squeeze trigger (4) to operate.

d. Aim nozzle at base of flames and direct discharge at the fire until it is extinguished.

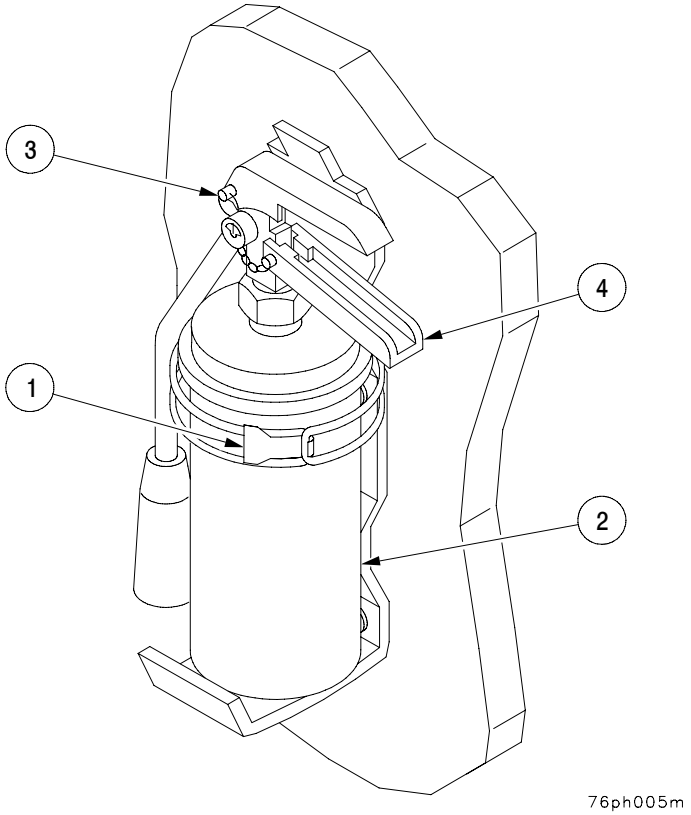

## 2-22 OPERATING AUXILIARY EQUIPMENT - CONTINUED

### 2-22.7 Operating NBC Equipment.

2-22.7.1 General.

The NBC equipment consists of:

(1) Microclimate Conditioning System (MCS)

(2) MCS Control Panel

(3) Distribution and heating system

(4) Two MOPP suits and M42A1 mask for each crewmember

(5) One vest for each crewmember

2-22.7.2 Functional Description.

a. The MCS is a self-contained air-conditioning and filtering system located on the cab roof. The output is vented through the cab roof into the distribution and heating network.

b. The distribution lines connect to M3 heaters, one near each workstation. Each heater outputs through hose and diverter valve through a quick-disconnect opening.

c. From each opening a flexible hose connects, via a diverter valve, to a vest and M42A1 face mask. The suit and mask insulate the crewmember from gases, fluid droplets, and particulates. They also provide some protection from the alpha and beta emissions of radioactive fallout. The air to the suit is ducted through a vest to cool the crewmember.

d. The MCS operating mode is selected at the MCS control panel near the gunner's station. Modes are: low or high air flow without cooling; or high air flow with cooling.

e. Two warning lights are provided:

(1) CHANGE FILTER. Filter is clogged enough to degrade air flow and must be changed.

(2) FREON PRESSURE. Refrigerant pressure in air conditioner is outside design limits. See Table 3-1, Troubleshooting, Procedure 21, Step 1.

f. For further information on the MOPP equipment, refer to FM 3-4.

g. Engine must be idled at 1000 to 1200 rpms while operating the MCS.

**CAUTION**

To prevent propellant fumes, smoke and carbon monoxide in the cab when all hatches are closed be sure to set Lead Filter switch to ON (on the Accessory Control Box) and move Vent Duct Control Handle in UP position during all firings in suspected NBC environments.

## 2-22 OPERATING AUXILIARY EQUIPMENT - CONTINUED

### 2-22.7 Operating NBC Equipment - Continued

2-22.7.3 NBC Equipment Operation.

**WARNING**

Allow M3 heater to run 15 minutes before hooking up to protective mask. Ensure warm air is flowing or frostbite to lungs may occur.

a. Put on vest, MOPP suit, and M42A1 face mask. Connect quick-disconnect hose to M42A1 mask carrier. Connect hose from mask into diverter valve output.

b. At MCS Control Panel (1), use MCS mode switch (2) to select desired operation.

(1) LOW AIR. Low air flow, no cooling, heating with M3 Heater.

(2) HIGH AIR. High air flow, no cooling, no heating.

(3) COOL. High air flow, cooling, no heating.

c. Observe the CHANGE FILTER (3) and FREON PRESSURE (4) warning lights. If CHANGE FILTER light is on, change filter (para 3-8.16). If FREON PRESSURE light is on, see Table 2-1, Item 29, Crewmember procedures "NOTE" and Table 3-1, Troubleshooting, Procedure 21, Step 1.

d. Adjust diverter valve for air flow to mask and vest.

**CAUTION**

Whenever MCS or driver's station is not in use, ensure that driver's/cab quick-disconnect coupling is disconnected, the cap installed on the coupling, and the flex hose properly secured in the hook and loop fastener provided in the hull.

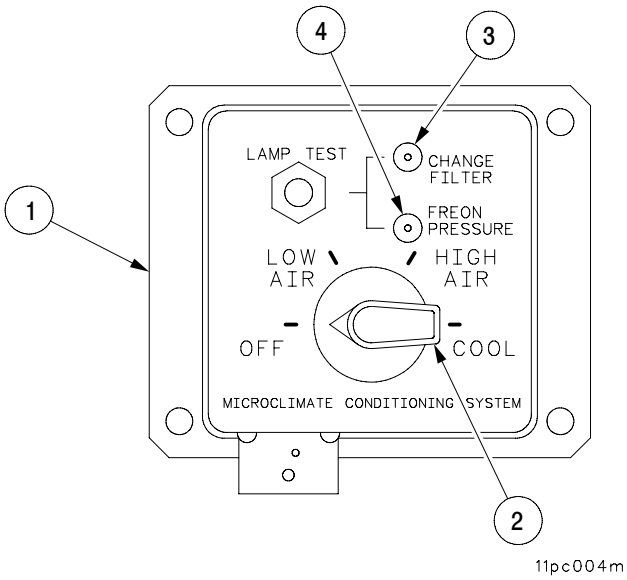

## 2-22 OPERATING AUXILIARY EQUIPMENT - CONTINUED

### 2-22.7 Operating NBC Equipment - Continued

e. When NBC protection is no longer necessary, set MCS mode switch (2) to OFF. Disconnect hose at quick-disconnect opening on M42A1 mask carrier. Disconnect hose from diverter valve on mask. Connect diverter valve hose to stowage connection. Reconnect cab-to-hull transfer hose, and stow using Velcro straps provided.

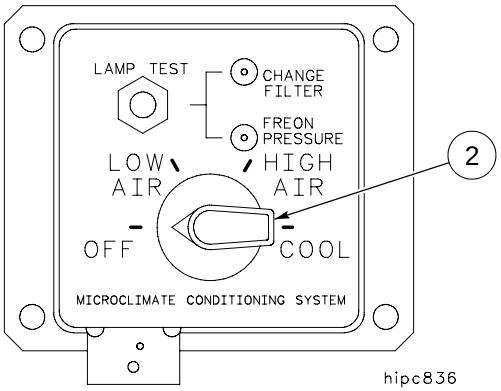


### 2-22.8 Cal .50 Machine Gun.

2-22.8.1 Removing Cal .50 Machine Gun.

a. Remove rear locking pin (1), front locking pin (2), and machine gun (3) from pintle and cradle (4).

b. Remove travel lock pin (5), from travel lock (6). Secure travel lock pin (5) to pintle support (7).

c. Pull lock handle (8) down and remove pintle and cradle (4) from pintle support (7).

2-22.8.2 Installing Cal .50 Machine Gun.

a. Pull lock handle (8) down and install pintle and cradle (4) in pintle support (7).

b. Secure travel lock (6) to pintle and cradle (4) with travel lock pin (5).

c. Install machine gun (3) in pintle and cradle (4) with front locking pin (2) and rear locking pin (1).

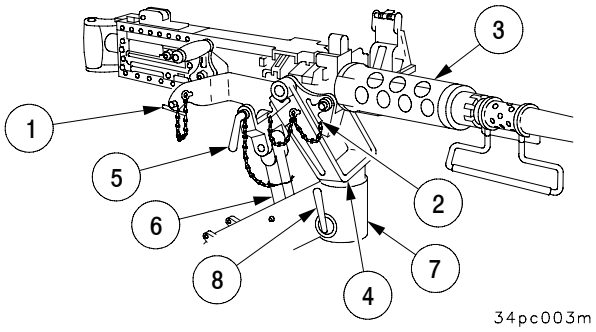

# 2-22 OPERATING AUXILIARY EQUIPMENT - CONTINUED

## 2-22.9 Operating the Precision Lightweight GPS (Global Positioning System) Receiver (PLGR)

2-22.9.1 General.

The PLGR consists of :

(1) AN/PSN-11
(2) External Antenna
(3) Vehicle Mount
(4) Power Cable (External)
(5) CU W17A P4 Connector Cable
(6) Antenna to Mount Cable
(7) Mount to AN/PSN-11 Cable
(8) Primary Battery

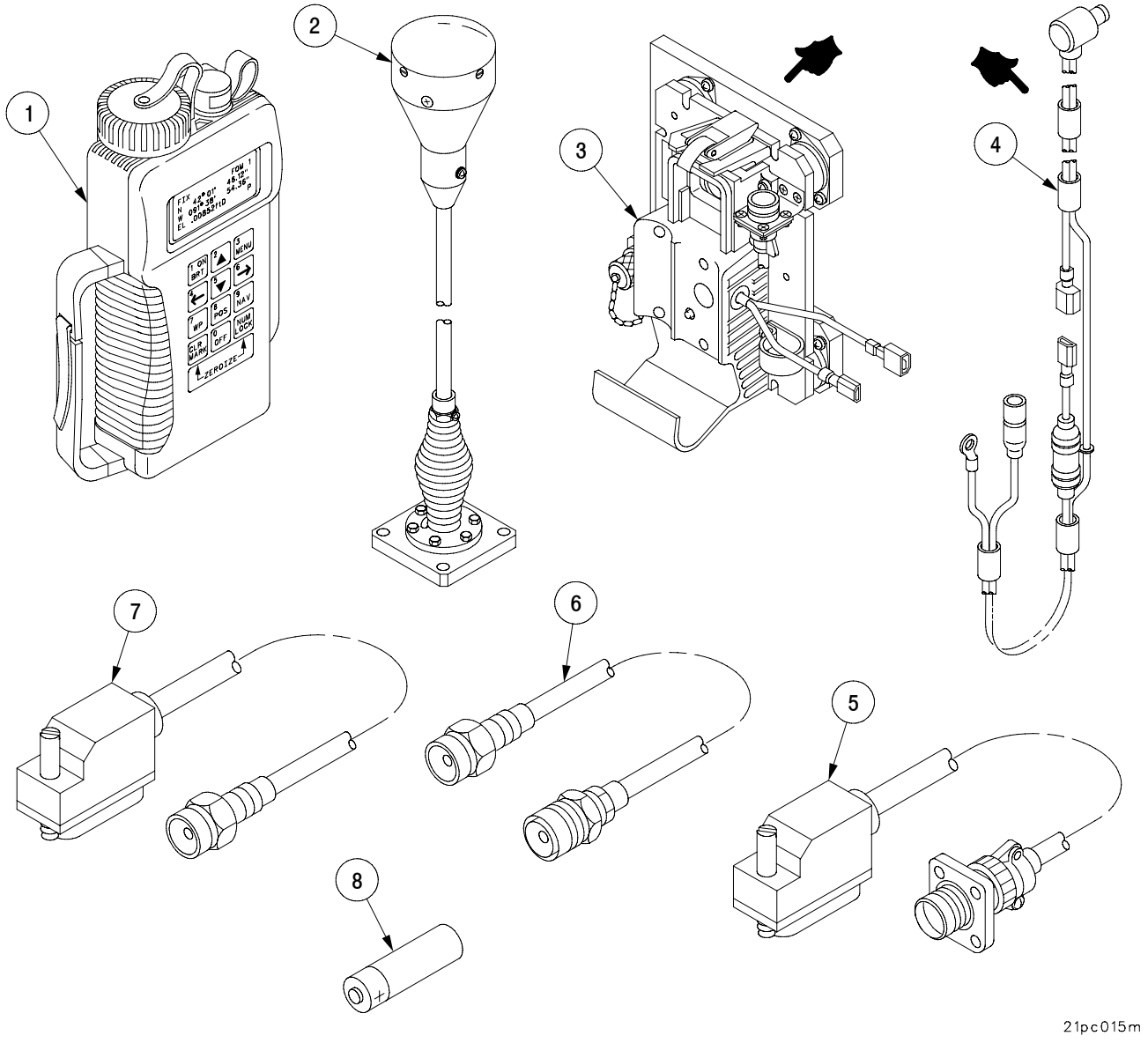

## 2-22 OPERATING AUXILIARY EQUIPMENT - CONTINUED

### 2-22.9 Operating the Precision Lightweight GPS (Global Positioning System) Receiver (PLGR) - Continued

2-22.9.2 PLGR Installation.

**WARNING**

When operating the PLGR on external power with BA-5800 lithium battery installed, the **"BATTERY MAY EXPLODE"**. Ensure battery is removed before connecting power cable to prevent serious injury or death.

a. Remove batteries from PLGR.

**CAUTION**

- The PLGR power fuse will blow if the center socket of power cable plug contacts the vehicle chassis. Make sure this plug is either connected to the PLGR or otherwise insulated (e.g. taped to the plastic PLGR mount) before turning on vehicle power.
- When installing the PLGR in the vehicle the cables must be installed in the order as indicated in steps a. thru e. to prevent damage to the PLGR and the DRUH.

b. Connect the antenna D-shell connector to PLGR J3 connector
c. Connect the W17A P4 D-shell connector to PLGR J2 connector.
d. Insert power cable plug onto PLGR J4 connector.
e. Slide the PLGR into its plastic mount and secure with the mount latch. When securing the PLGR, make sure the cables exit through the notch in the side of the mount.

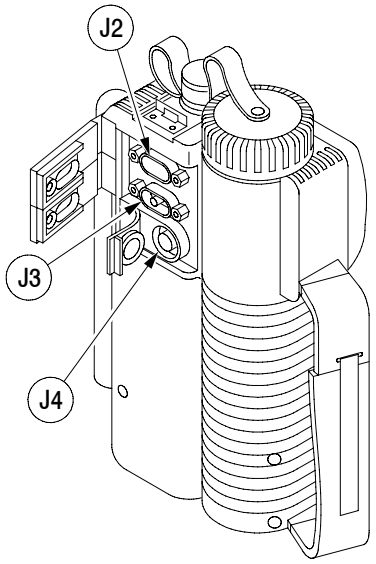


AN/PSN-11
CONNECTORS

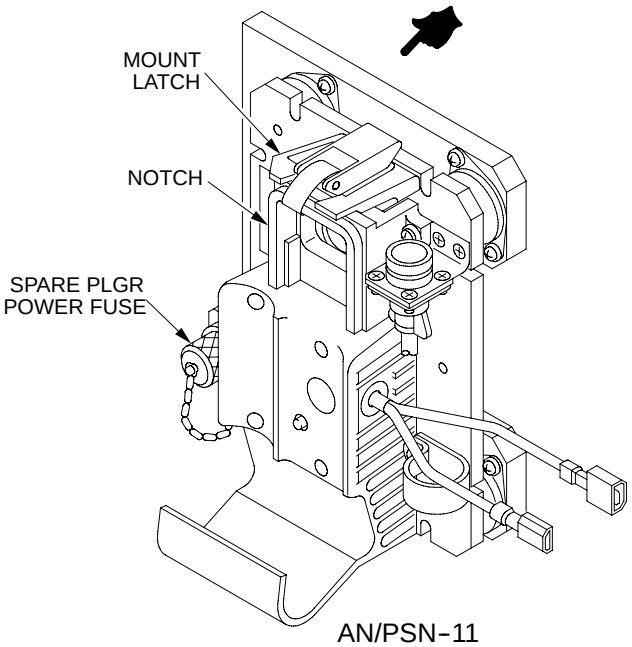


AN/PSN-11
VEHICLE MOUNT

21pc019m

# 2-22 OPERATING AUXILIARY EQUIPMENT - CONTINUED

## 2-22.9 Operating the Precision Lightweight GPS (Global Positioning System) Receiver (PLGR) - Continued

2-22.9.3 PLGR Power Cable Fuse Replacement.

a. Separate power cable connector fuse holder.

b. Remove blown fuse.

c. Remove new fuse from vehicle mount spare fuse holder.

d. Install fuse in power cable connector fuse holder.

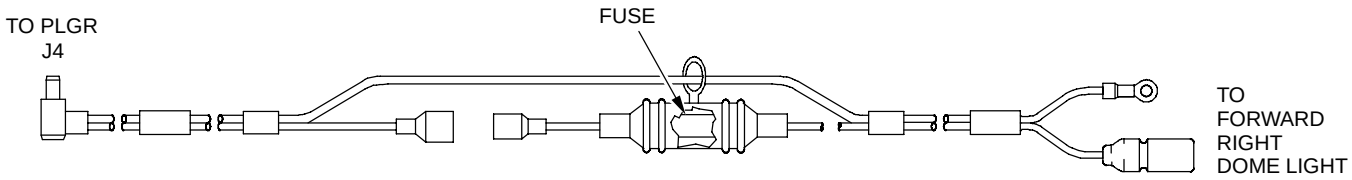


PLGR POWER CABLE

21pc020m

2-22.9.4 PLGR Removal.

a. Slide PLGR from mount.

b. Disconnect wiring harness W141 from PLGR J2 connector.

c. Pull power cable plug from PLGR J4 connector and tape to mount.

d. Disconnect the antenna D-shell connector from PLGR J3 connector.

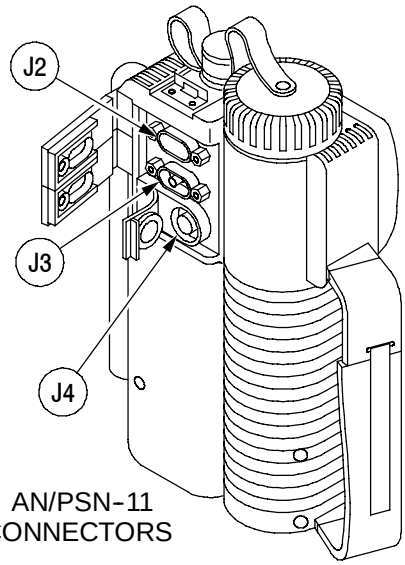


AN/PSN-11
CONNECTORS

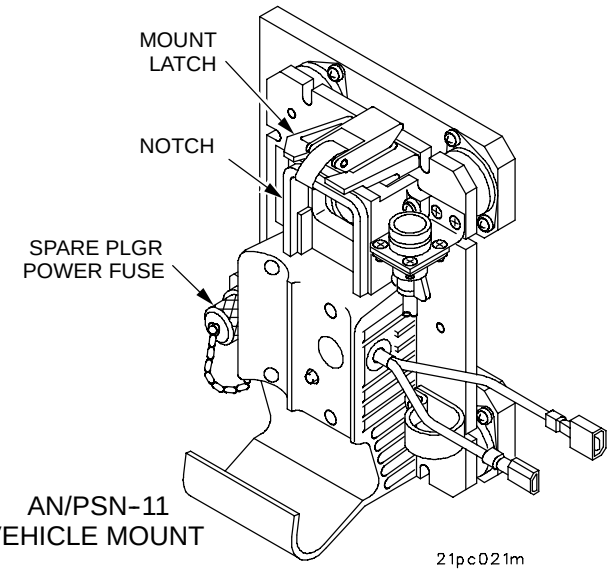


AN/PSN-11
VEHICLE MOUNT

21pc021m

# 2-22 OPERATING AUXILIARY EQUIPMENT - CONTINUED

## 2-22.10 Operating the Defense Advanced GPS (Global Positioning System) Receiver (DAGR)

2-22.10.1 General.

The DAGR consists of:

1. AN/PSN-13
2. External Antenna
3. Vehicle Mount
4. Power Cable
5. Cable Assembly W141
6. Cable Assembly W143
7. Cable Assembly W153
8. Primary Batteries (four AA Batteries)

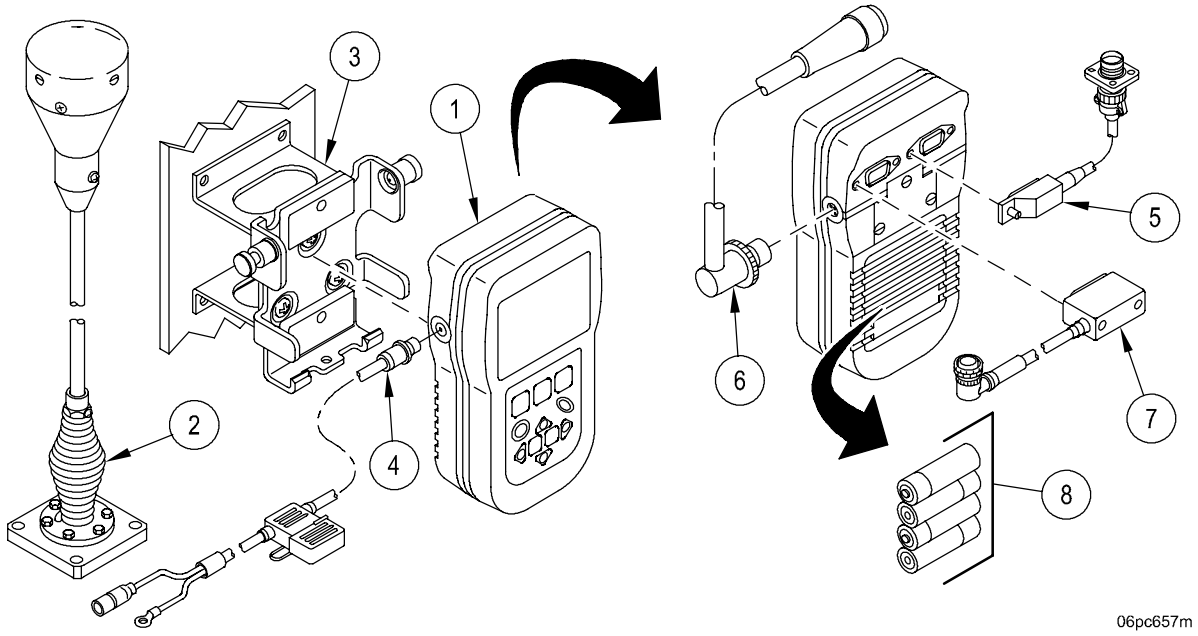

## 2-22 OPERATING AUXILIARY EQUIPMENT - CONTINUED

### 2-22.10 Operating the Defense Advanced GPS (Global Positioning System) Receiver (DAGR) - Continued

2-22.10.2 DAGR Installation.

**WARNING**

**ALKALINE BATTERIES**

Caustic potassium hydroxide gas may be released from leaking or ruptured batteries. Avoid eye or skin contact and inhalation of vapors. Increase ventilation. Wear safety glasses and rubber gloves when handling leaking batteries. Dispose in accordance with local regulation. Refer to TB 43-0134, Batteries, Disposition and Disposal for additional information.

**NOTE**

Before removing DAGR from DAGR mount, label wiring harness to aid in DAGR installation.

a. Connect the antenna cable assembly W143 to DAGR J3 connector.

b. Connect PIA cable assembly W153 to DAGR J1 connector.

c. Connect cable assembly W141 to DAGR J2 connector.

d. Connect power cable plug W142 to DAGR J4 connector.

e. Pull outward on two slide pins located on mount and twist to lock into open position.

f. Place DAGR into host platform mount and release slide pins.

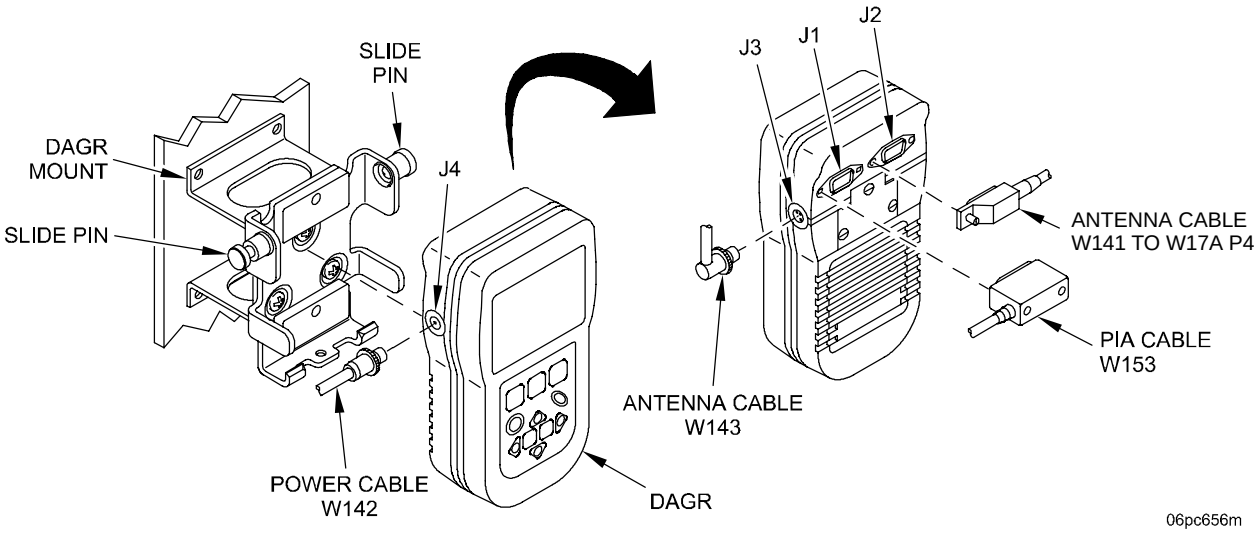

# 2-22 OPERATING AUXILIARY EQUIPMENT - CONTINUED

## 2-22.10 Operating the Defense Advanced GPS (Global Positioning System) Receiver (DAGR) - Continued

2-22.10.3 DAGR Power Cable Fuse Replacement.

a. Ensure primary power to DAGR is off.

b. Open the fuse holder to access the fuse.

c. Remove blown fuse and replace with new fuse.

d. Reconnect and securely close the fuse holder.

e. Turn DAGR on and check for proper operation.

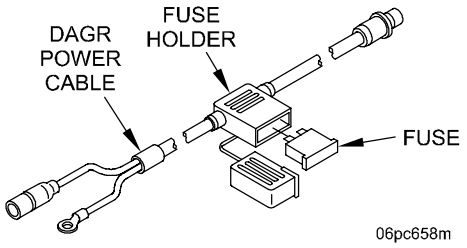


2-22.10.4 DAGR Removal.

a. Turn off power to the DAGR.

b. Remove any cables from connectors J1, J2, J3, or J4.

c. Pull two slide pins located on mount outward, then twist slide pins to lock into open position.

d. Remove DAGR from mount and release slide pins.

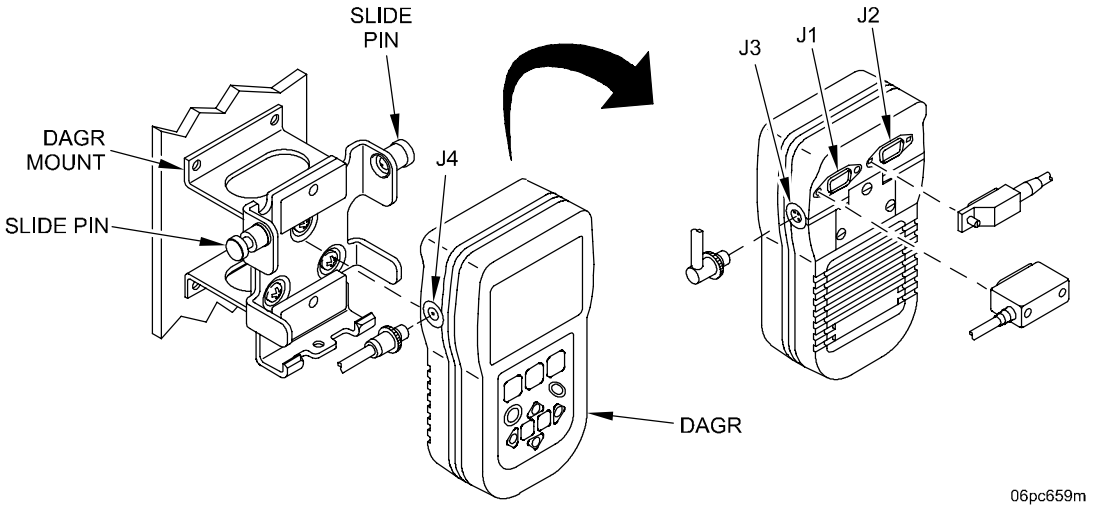

## 2-22 OPERATING AUXILIARY EQUIPMENT - CONTINUED

### 2-22.11 Operating the EPIAFS - Enhanced Portable Inductive Artillery Fuze Setter.

2-22.11.1. General.

The EPIAFS consists of:

1. Inductive Fuze Setter (IFS)
2. IFS mount
3. Cable assembly W150
4. Batteries (two D-cell or one BA-5800)

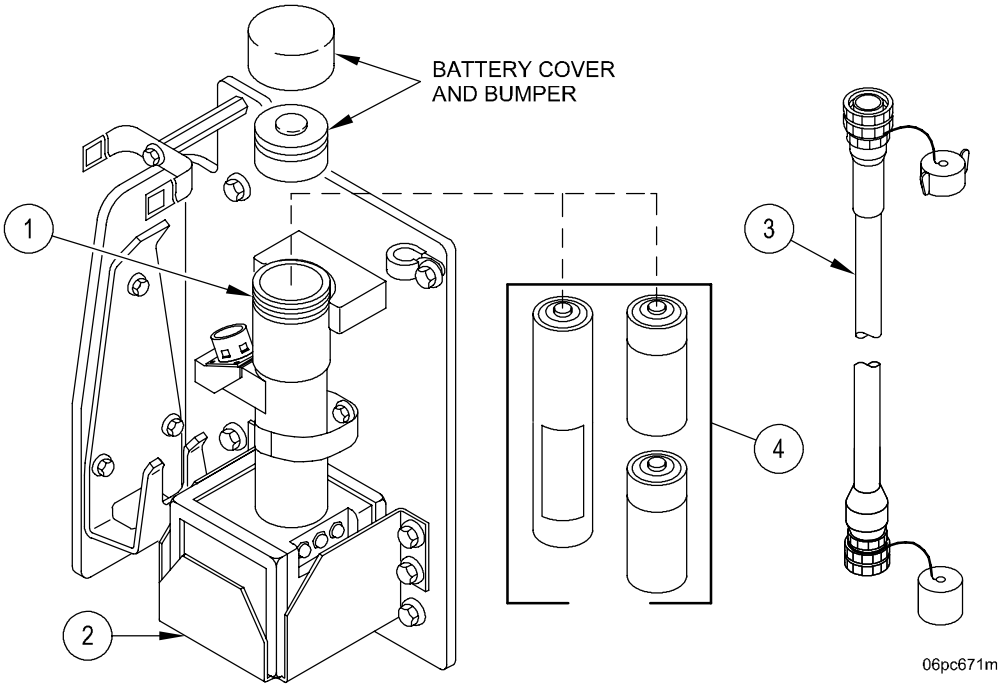

## 2-22 OPERATING AUXILIARY EQUIPMENT - CONTINUED

### 2-22.11 Operating the EPIAFS - Enhanced Portable Inductive Artillery Fuze Setter - Continued

2-22.11.2. EPIAFS operation.

**WARNING**

**ALKALINE BATTERIES**

Caustic potassium hydroxide gas may be released from leaking or ruptured batteries. Avoid eye or skin contact and inhalation of vapors. Increase ventilation. Wear safety glasses and rubber gloves when handling leaking batteries. Dispose in accordance with local regulation. Refer to TB 43-0134, Batteries, Disposition and Disposal for additional information.

**WARNING**

**LITHIUM-SULFUR DIOXIDE (Li-SO2) BATTERY, BA-5800**

Li-SO2 batteries contain pressurized SO2 gas. The gas has a sharp pungent odor (characterized as "rotten egg" smell), and is highly toxic. the battery MUST NOT be abused in any way which may cause the battery to rupture. Always use these lithium battery precautions:

- If you hear a hissing sound (battery venting), or smell irritating gas, IMMEDIATELY turn off the equipment, and LEAVE the area. Ventilate area until smell of leaking gas has dissipated.
- IMMEDIATELY turn off the equipment if battery or battery compartment shows signs of overheating or becomes hot to the touch. Allow the battery to cool (at least 60 minutes) before removing it.
- Never charge, short circuit, mutilate, or dispose of lithium batteries in a fire, or in any way expose lithium batteries to excessive heat.
- When operating the EPIAFS on external power with BA-5800 lithium battery installed, the battery may explode. Ensure battery is removed before connecting power cable to prevent serious injury.
- Dispose of hazardous material and waste through the local servicing DRMO or via local contract. coordinate with local Installation/Environmental/Hazmat Officer to ensure conformance with federal, state and local environmental regulations.

## 2-22 OPERATING AUXILIARY EQUIPMENT - CONTINUED

### 2-22.11 Operating the EPIAFS - Enhanced Portable Inductive Artillery Fuze Setter - Continued

2-22.11.2. EPIAFS operation - Continued

**WARNING**

**LITHIUM-SULFUR DIOXIDE (Li-SO2) BATTERY, BA-5800 - CONTINUED**

- Always store, operate, and dispose of lithium batteries in accordance with TB 43-0134, Technical Bulletin Battery Disposition and Disposal.

**NOTE**

The IFS can be operated using two standard alkaline D-cell batteries or one BA-5800 lithium battery. During cold weather operations, BA-5800 lithium battery pack must be used.

a. Release strap and lift IFS from mount.
b. Remove the connector protective cap and attach cable assembly W150.
c. For operating procedures for EPIAFS, refer to TM 9-1290-211-13&P.

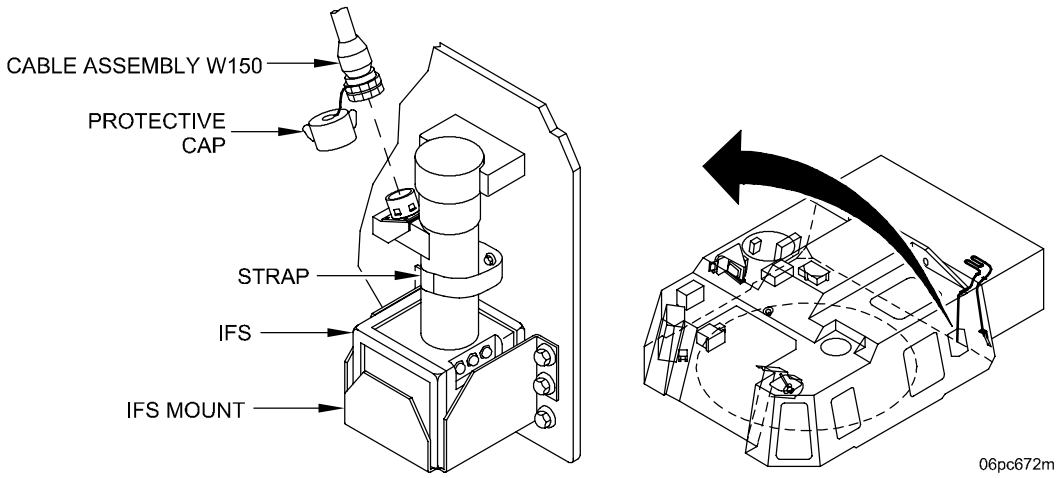

## Section IV. OPERATION UNDER UNUSUAL CONDITIONS

### 2-23 GENERAL.

**CAUTION**

The AFCS Prognostic/Diagnostic Interface Unit (PDIU) and PDFCS Digital Computer Unit (PDCU) continuously monitors hydraulic system operation. Signals from the built-in sensors are interpreted by the PDIU/PDCU, which notifies the operator of unusual equipment conditions. Appendix G contains information on the types of PDIU messages displayed on the DU, and suggestions for appropriate operator action.

#### 2-23.1 Vehicle.

a. In addition to normal PMCS, special care in cleaning and lubrication must be observed where extremes of temperature, humidity and terrain conditions are present or anticipated.

b. Use of sand bags for armor on the M109A6 bustle roof: For instructions to identify requirements for providing adequate protection for the M109A6 bustle when using sand bags as armor, and recommended methods of stacking and securing the sand bags to the bustle roof, see TB 9-2350-314-10.

**NOTE**

FM 21-17 contains important instructions on driver selection, training, and supervision. FM 21-306 gives driving instructions for operating equipment under all conditions.

#### 2-23.2 Lubrication of Armament.

**CAUTION**

During lubrication of armament, be extremely cautious not to allow ice, snow, or water to mix with lubricants. Never use heavy or non-specified lubricants.

Refer to Appendix I. Additional instructions are:

a. In temperatures below freezing, keep howitzer's moving parts free from moisture.

b. During adverse conditions, lubricants should be changed more frequently to prevent damage to equipment.

c. When not in use, howitzer should be covered. Clean and lightly lubricate breech mechanism. Do not apply any lubrication to firing pin. When cleaning, do not dilute or add anti-freeze to rifle bore cleaner. When you are through, store cleaning solutions in warm place, if available.

d. Use CLP (Item 10, Appx D) in cleaning and lubing the M2 .50 cal machine gun to ensure proper functioning.

## 2-23 GENERAL - CONTINUED

### 2-23.3 Sighting and Fire Control Instruments.

**NOTE**

Where extremes of temperature, humidity and other conditions cause ballistic shield window to fog over, treat window with anti-fogging kit (item 2, Appx D).

These instruments should not be moved suddenly from cold to warm temperatures or vice versa. This may cause clouding of optics and corrosion of internal parts.

## 2-24 OPERATION IN EXTREME HEAT, HUMIDITY, OR SALTY CONDITIONS.

a. When operating your vehicle in extreme heat, humidity, or salty conditions, observe the following Do's and Don'ts:

(1) DON'T....park your vehicle in the sun for long periods of time.

(2) DO....lubricate your weapons more frequently because oil evaporates.

(3) DO....clean and lube the howitzer bore and metal surfaces as often as needed.

(4) DO....lubricate weapon and mount when not in use per Appendix I and keep covers in place.

(5) DO....ensure that hydraulic cooling switch is ON.

b. When operating your vehicle in dusty/sandy areas, observe the following:

(1) DON'T....spin your tracks while operating.

(2) DO....park vehicle under shelter; if none available, cover vehicle with tarpaulins.

(3) DO....keep all armaments lubricated and covered when not in use.

(4) DO....before firing machine gun, remove and lube bolt assembly, receiver, trigger, feed tray, cover assembly, barrel, and other moving parts.

## 2-25 OPERATION IN EXTREME COLD.

### 2-25.1 Operating Winterization Kit.

The winterization kit is installed by direct support maintenance. It is used in extreme cold (0° to -65°F) to prevent coolant from freezing after vehicle has been shut down.

a. Both coolant level and fuel supply must be full.

**NOTE**

Heater will operate with MASTER switch either ON or OFF.

b. Depress press-to-test light (1) to check for electrical current.

c. Be sure engine coolant is at normal operating temperature. (You may have to start engine and bring coolant temperature up.)

d. Remove heater exhaust outlet plug (2).

e. Secure tarpaulins over air intake and exhaust grilles. Tarpaulins will help keep out the cold and retain heat from the winterization kit.

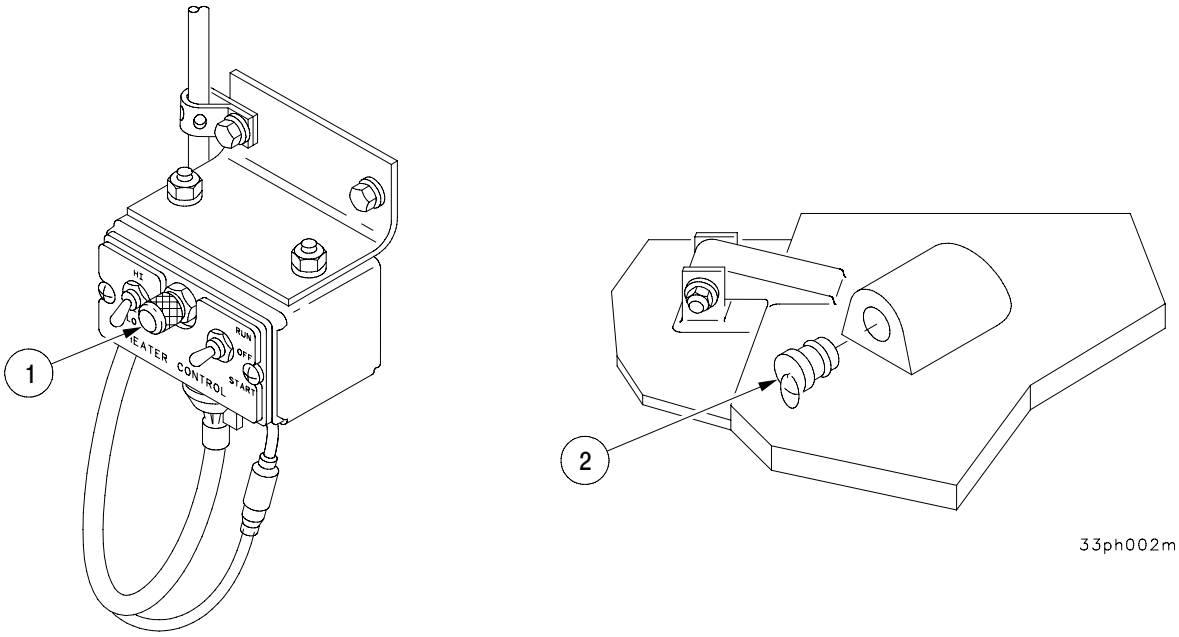

## 2-25 OPERATION IN EXTREME COLD - CONTINUED

### 2-25.2 Operating Coolant Heater.

2-25.2.1 Starting Heater.

**NOTE**

After heater starts, it will keep working as long as you have fuel, electric current, air, and a flow of engine coolant. Heater will automatically stop if coolant temperature reaches 245°F. It has to be restarted by repeating starting procedure.

a. Turn HI-LO switch (1) to HI.

b. Hold START/RUN/OFF switch (2) at START.

c. Indicator lamp (3) will light, indicating heater is operating. Immediately move START/RUN/OFF switch (2) to RUN position, without hesitating in the OFF position.

d. Set HI-LO switch (1) for desired rate of heat. If set at HI, heater will automatically go to low heat when coolant temperature reaches 190°F. If coolant temperature falls below 120°F, heat control will return to high. LOW position is suitable when heater must burn for an extended period of time.

2-25.2.2 Stopping Heater.

Place START/RUN/OFF switch (2) at OFF. Heater will go to purge cycle. Fuel will shut off and burning will stop when remaining fuel in heater is exhausted. Blower will run at low speed until heater is cool and then heater will completely shut down.

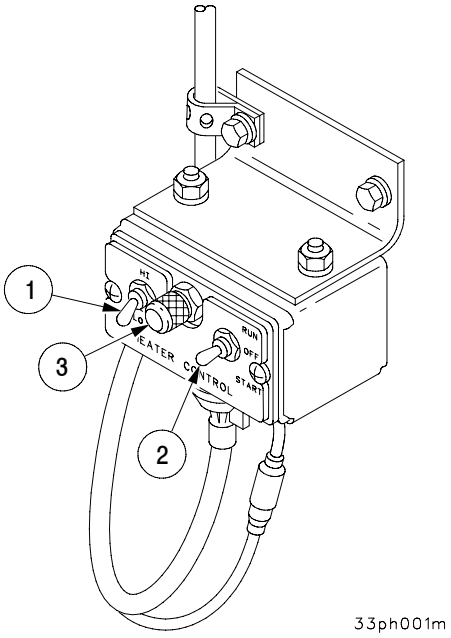

## 2-25 OPERATION IN EXTREME COLD - CONTINUED

### 2-25.3 Cold Weather Starting (Below +40°F).

a. If you have been using winterization kit, you must stop heater before trying to start engine. Remove tarpaulins and roll into smallest tube form. Secure tarpaulins with webbing assemblies. Install exhaust outlet plug.

b. Charge batteries (especially after 24 hours of winterization kit operation).

c. Press down on service brake pedal (1), pull out and down on brake lock handle (2), then release handle (2) to set brake.

d. Shift transmission shift lever (3) into neutral (N).

e. Make sure AFCS/PDFCS and radios are turned off.

f. Turn MASTER switch (4) to ON; indicator lamp (5) will light.

g. Place engine throttle (6) in full throttle position.

h. Move GLOW PLUG switch (7) to ON; glow plug WAIT lamp (8) will illuminate and stay on.

i. After 35 seconds, when WAIT lamp (8) flashes ON/OFF, move STARTER switch (9) to START to engage starter. Hold STARTER switch (9) ON for 2 or 3 seconds, but no more than 5 seconds. Do not move engine throttle (6).

j. Engine should start and increase in speed. When engine speed (rpm) reaches 1500 to 1800 rpm on tachometer (10), reduce throttle and hold engine speed to 1200 to 1500 rpm on tachometer (10).

**NOTE**

- Attention should be focused upon WAIT lamp during start-up.
- Glow plugs are “ON” whether the WAIT lamp is illuminated continuously or flashing.
- The WAIT lamp will not light, or it will go out upon initiation of cranking, if voltage is insufficient.
- When STARTER switch is engaged, WAIT lamp will stop flashing and stay on for 1 minute after the release of the STARTER switch.
- If STARTER switch is not engaged within 1 minute after WAIT lamp starts to flash, glow plugs and WAIT lamp will turn off.

## 2-25 OPERATION IN EXTREME COLD - CONTINUED

### 2-25.3 Cold Weather Starting - Continued

k. If engine fails to start, wait 10 seconds and engage STARTER switch (9). If engine fails to start after four attempts, or if the WAIT lamp (8) does not illuminate, stop starting procedure and notify unit maintenance.

**CAUTION**

A manual override for glow plug equipped engines is used in emergencies only, as determined by the chief of section. Manual override is affected by holding on continually the spring loaded GLOW PLUG switch. Do not hold manual override switch on for more than 2 minutes.

l. If engine does not start, or when WAIT lamp (8) does not illuminate, as determined by the chief of section, manual override may be used. Hold GLOW PLUG switch (7) in ON position; after 35 seconds, engage STARTER switch (9). When engine starts, continue to hold in GLOW PLUG switch (7) until engine speed reaches 1500 rpm on tachometer (10), and then release GLOW PLUG switch. If engine does not start after four attempts, stop starting procedures and notify unit maintenance.

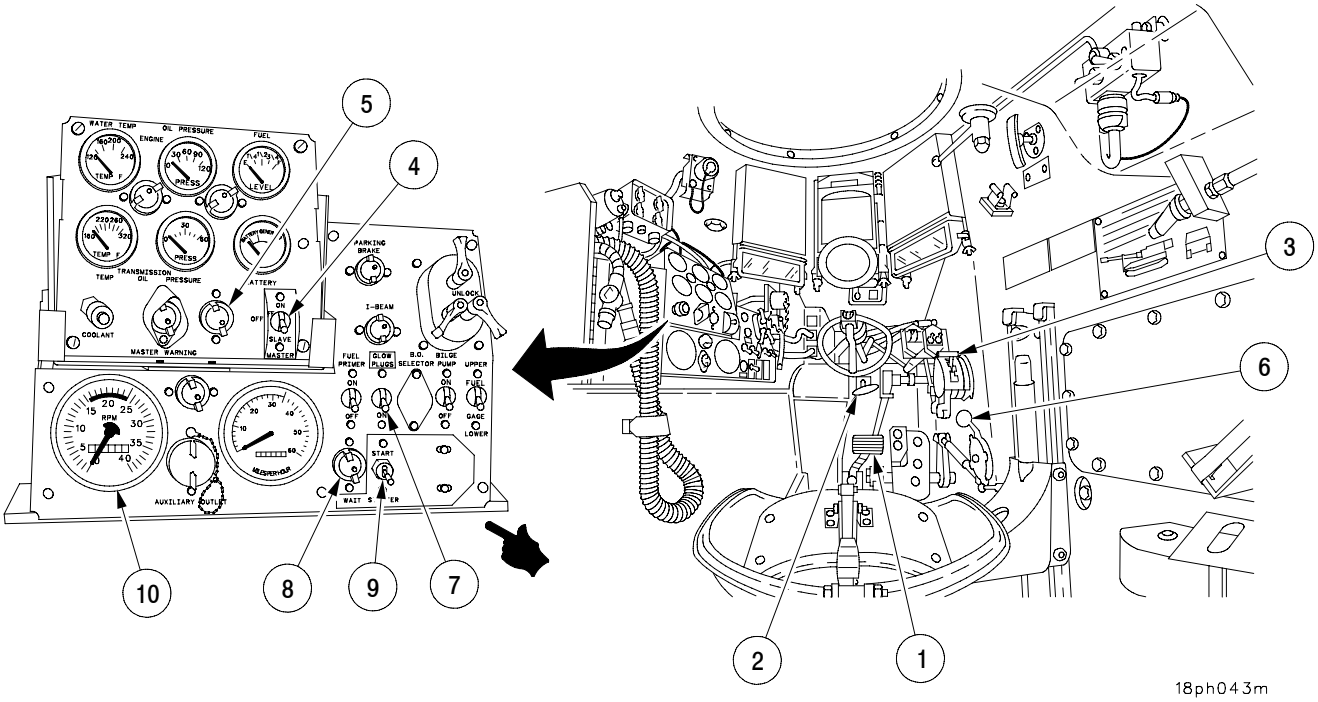

## 2-25 OPERATION IN EXTREME COLD - CONTINUED

### 2-25.3 Cold Weather Starting - Continued

**CAUTION**

STARTER PROTECTION OVERRIDE switch is to be used in emergencies only, as determined by COS. Do not make more than two attempts to start engine using STARTER PROTECTION OVERRIDE switch; damage to starter or low battery voltage may occur.

m. If STARTER PROTECTION OVERRIDE switch (11) is used to start engine, do not make more than two attempts. If engine still does not start, stop starting procedure and notify unit maintenance.

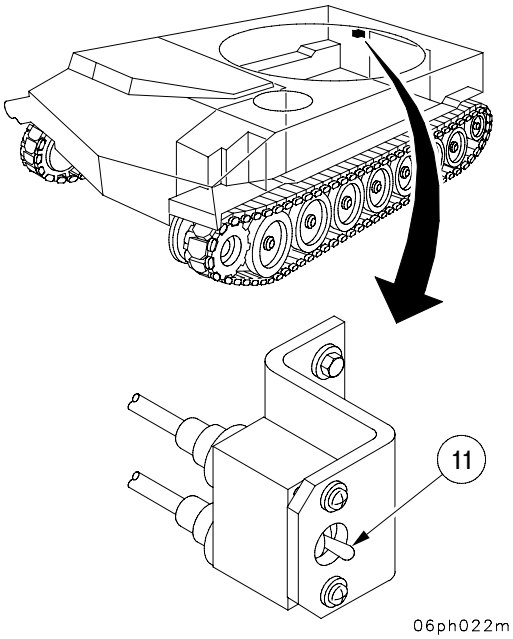

## 2-25 OPERATION IN EXTREME COLD - CONTINUED

### 2-25.3 Cold Weather Starting - Continued

n. With brakes still locked, set throttle to run engine at 1200 rpm and shift transmission to 4th gear position until engine coolant temperature gage indicates 120°F to 140°F. Then shift into neutral and idle engine. (If transmission temperature approaches 300°F during warmup, immediately shift to neutral, until temperature approaches normal range.)

o. During warmup, refer to instrument panel checkout procedure (para 2-8.4).

p. Shift transmission to 1st gear position and drive vehicle slowly 100 yards, being careful not to stall engine. This warms lubricants sufficiently for normal operation.

### 2-25.4 Driving Operations in Extreme Cold Weather.

For driving operations in extreme cold weather, refer to FM 21-306 and FM 31-70.

### 2-25.5 Operating Hydraulic System in Extreme Cold Weather.

**NOTE**

Extreme cold weather increases the viscosity of hydraulic fluid. It must be warmed to bring the viscosity into the normal operating range before using the hydraulic system.

a. On hydraulic control box (1) set HYDRAULIC WARM UP switch (2) to AUTO. The HYDRAULIC WARMUP light (3) will go on.

b. Wait until HYDRAULIC WARMUP light (3) goes out before using hydraulic system.

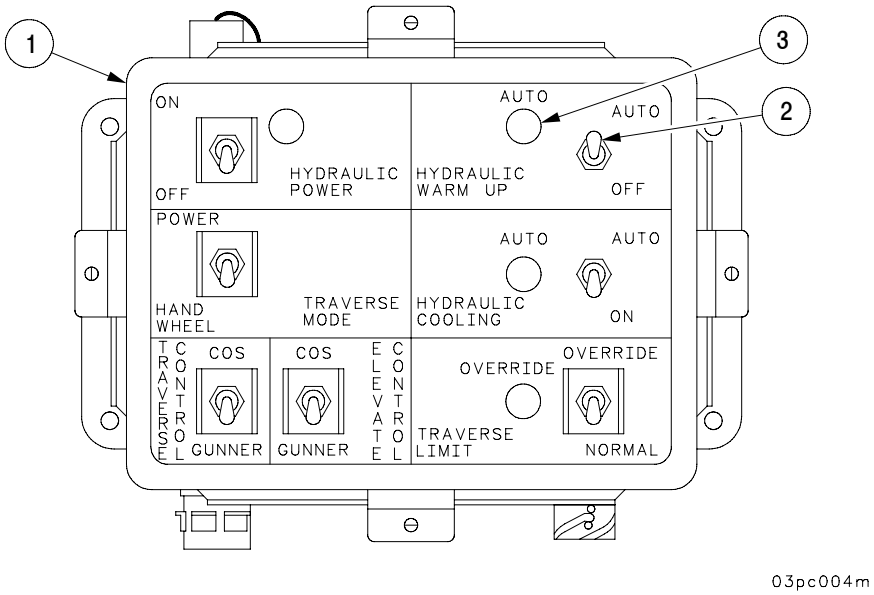


03pc004m

## 2-25 OPERATION IN EXTREME COLD - CONTINUED

### 2-25.6 Operating Howitzer Cannon in Extreme Cold Weather.

**CAUTION**

In cold weather, ensure that travel lock is free of ice and snow before releasing or stowing gun tube.

**NOTE**

Extreme cold weather (-20°F to -65°F) slows down extension of counter recoil buffer to its maximum length for proper buffering action. You should operate breech mechanism manually, observing the following instructions when firing first several rounds to warm hydraulic fluid to operating temperature.

a. Prepare weapon for firing before opening breech; loosen jamnut (1) on cam stop (2).

b. Manually open breech, load projectile and charge; close breech.

**CAUTION**

Use Charge 5 or below in cold weather.

c. Before inserting primer, raise breech operating cam (3) until it clears cam roller (4) by 1/16 inch to 1/8 inch above rollers. Turn cam stop (2) clockwise until clearance of 1/16 inch to 1/8 inch is maintained between breech operating cam (3) and cam roller (4). Tighten jamnut (1).

d. Insert primer and continue standard firing procedures.

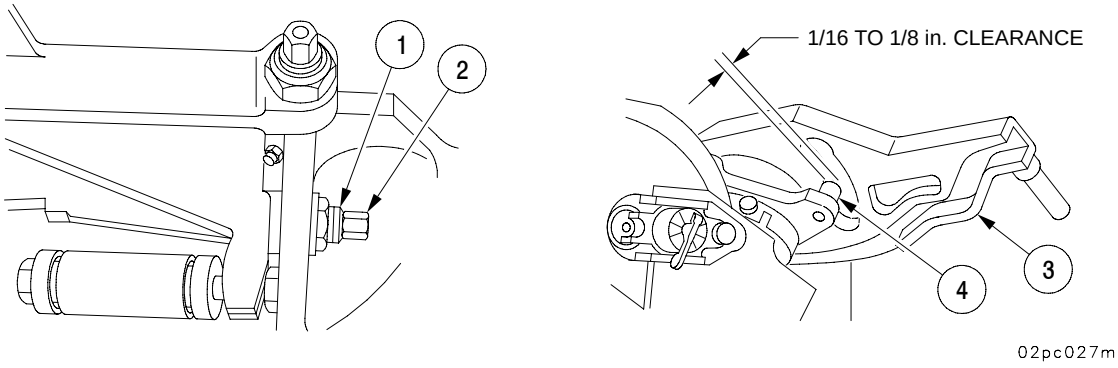

## 2-25 OPERATION IN EXTREME COLD - CONTINUED

### 2-25.6 Operating Howitzer Cannon in Extreme Cold Weather - Continued

e. After weapon returns to battery, lift breech operating cam (3) and loosen jamnut (1). Turn cam stop (2) counterclockwise until cam roller (4) engages in breech operating cam (3) approximately 3/16 inch, to permit breech operating cam (3) and cam roller (4) to hold breech open to reload weapon. Tighten jamnut (1).

f. Repeat steps b thru e for each round fired, until buffer fluid is warmed to operating temperature.

Buffer fluid can be warmed to operating temperature as follows:

| Temperature | No. of Rounds | Total Elapsed Time |
|---|---|---|
| -20°F (-29°C) | 4 | 9 minutes |
| -30°F (-34°C) | 5 | 12 minutes |
| -40°F (-40°C) | 6 | 15 minutes |
| -50°F (-45°C) | 7 | 21 minutes |
| -60°F (-51°C) | 8 | 24 minutes |

g. After final "warmup" round is fired, repeat step e, to ensure proper clearance of at least 3/16 inch but not more than 1/4 inch between top of cam roller (4) and top of breech operating cam (3) is maintained.

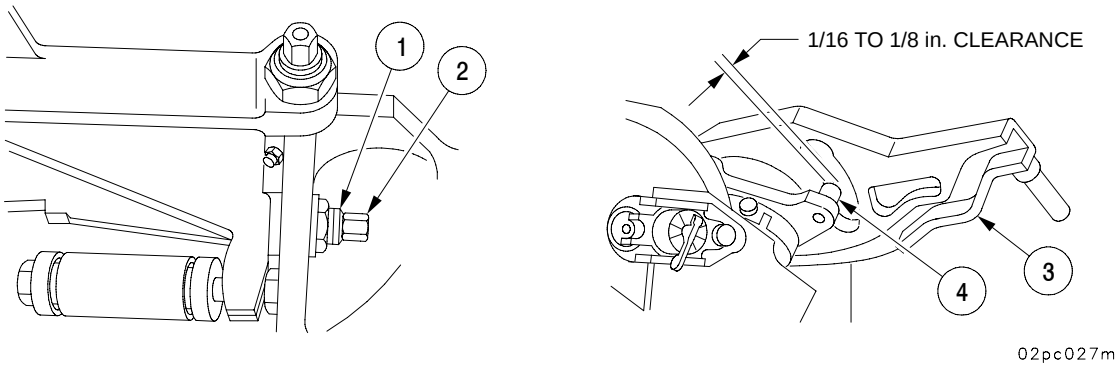


## 2-26 FORDING.

a. If time permits, add water to hull subfloor and check for leaks in hull plates and drain plugs. If leakage occurs, notify unit maintenance. Drain water.

**CAUTION**

Ensure hull plates and drain plugs are installed before fording operations. Ensure operation of bilge pump before fording operation.

b. Perform a lubrication service on components exposed to water following the operation (Appendix I).

# 2-27 NUCLEAR, BIOLOGICAL, AND CHEMICAL (NBC) DECONTAMINATION INSTRUCTIONS.

## 2-27.1 General.

**WARNING**

Do not use decontamination spray on personnel. It could cause personal injury.

**NOTE**

One M13 decontamination kit is carried on right outside wall of cab. Refer to TM 3-4230-214-12&P for detailed operation and maintenance of decontaminating apparatus. When time permits, decontaminate complete howitzer per FM 3-5.

## 2-27.2 External Decontamination.

If outside of vehicle is contaminated during a chemical or biological attack, open and exit howitzer, remove decontamination kit from right outside wall of cab, and spray the following areas:

Radiator access grille (1)
Radiator cap access cover (2)
Fuel filler cover (3)
Cal .50 machine gun (4)
Commander's cupola (5)
Rear stowage baskets (6)
Gunner's escape hatch (7)
Left side door (8)
Panoramic telescope ballistic cover (9)
Fire extinguisher T-handle cover (10)
Engine air intake grille (11)
Driver's hatch (12)
Battery access doors (13)
Transmission access doors (14)
Engine oil level check access cover (15)
AT4 Box (16)
Back Door (17)

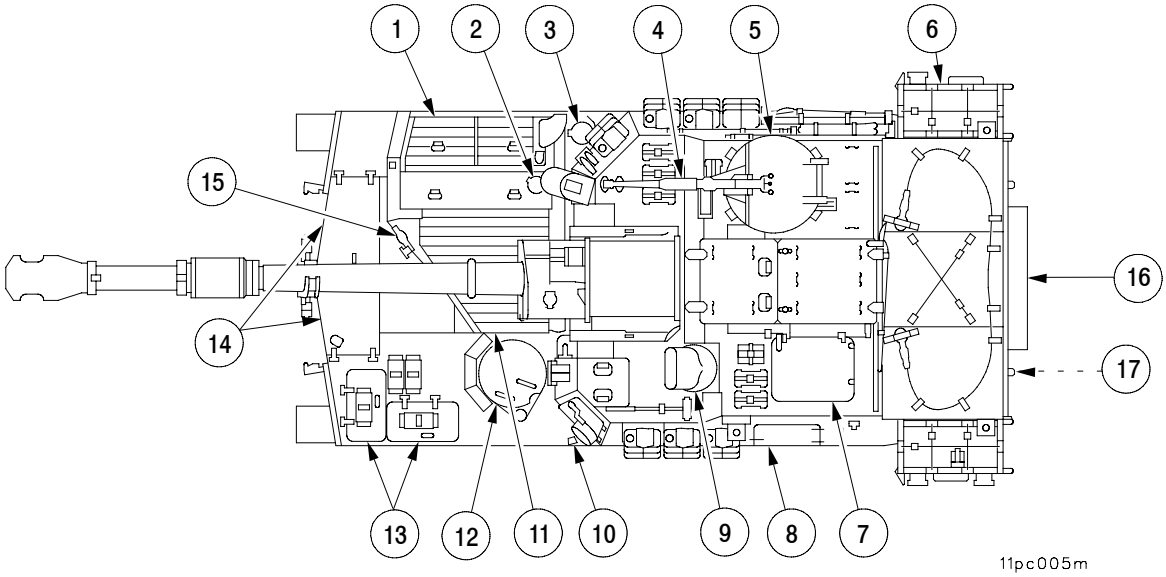

## 2-27 NUCLEAR, BIOLOGICAL, AND CHEMICAL (NBC) DECONTAMINATION INSTRUCTIONS - CONTINUED

### 2-27.3 Internal Decontamination.

**WARNING**

- NBC contaminated filters must be handled using adequate precautions (FM 3-3) and must be disposed of by trained personnel.
- Do not use M258A1 Decontaminating Kit wipes on eyes, mouth, or open wounds. This may cause personal injury. Flush these areas with water.

**CAUTION**

Use the decontaminating kits as instructed on the kit or in the technical manual. Use several wipes if necessary. If a chemical agent monitor or other appropriate chemical agent detection device is not available, remain in full MOPP until safe levels are verified.

**NOTE**

- If monitoring is to be done with the Chemical Agent monitor (CAM), use ONLY decontaminating wipe No. 2 prior to monitoring.
- After decontamination, clean all optical equipment, sights, or periscopes with the appropriate lens cleaning fluid to remove residue from the wipes.
- The M258A1 Decontaminating Kit is to be used on the interior of the vehicle. Refer to TM 3-4230-216-10 for detailed operation and maintenance of this kit.

If inside of howitzer is contaminated during a chemical or biological attack, use the M258A1 Decontaminating Kit wipes on the following areas:

Control handle, levers, and switches used to operate crew stations
Steering and engine operating controls
Fire control instruments and sights
Weapons and weapon sights
Seats and head rests
Inside doors and hatches
Radios

Chemical agent monitoring. Use the Chemical Agent Monitor as directed or refer to TM 3-6665-327-13&P for operating and maintenance instructions.

### 2-27.4 Complete Howitzer Decontamination.

When time permits, decontaminate complete howitzer (FM 3-5).

# CHAPTER 3

# MAINTENANCE INSTRUCTIONS

## Section I. LUBRICATION INSTRUCTIONS

### 3-1 SERVICE INTERVALS - NORMAL CONDITIONS.

For application of materials and service intervals, see Appendix I in this manual or appropriate instructions for specific component.

### 3-2 SERVICE INTERVALS - UNUSUAL CONDITIONS.

Lubricate more often to compensate for abnormal operation and extreme conditions. High or low temperatures, prolonged periods of high rate operation, continued operation in sand, dust, or exposure to moisture may quickly destroy the protective qualities of the lubricant.

## Section II. TROUBLESHOOTING PROCEDURES

### 3-3 SCOPE.

This section contains information on corrective actions used to return the howitzer to normal operation. This section cannot list all malfunctions that may occur, or all tests, inspections and corrective actions. If a malfunction is not listed, or is not corrected by corrective actions, notify unit maintenance.

### 3-4 GENERAL.

In troubleshooting the M109A6 howitzer, several tools and aids can be used to return the howitzer to a mission-capable status. These aids include the automatic Built-In-Test (BIT) and the AFCS Prognostic Diagnostic Interface Unit (PDIU) or the PDFCS Paladin Digital Computer Unit (PDCU). Crewmembers should report all malfunctions that are seen, felt, or heard to their supervisor (COS) first. This information aids on-board test equipment to accurately predict and determine faults. The BIT automatically tests the Automatic Fire Control System (AFCS) or the Paladin Direct Fire Control System (PDFCS). The PDIU/PDCU is an important aid in the system test chain. It predicts and determines failures of system components. System component failures are displayed by the PDIU on the Display Unit (DU) screen. Troubleshooting the M109A6 howitzer requires the crewmembers to perform unscheduled and scheduled maintenance procedures and to monitor system functions at all times. Troubleshooting is conducted both during operations and during preparation for operations. With all automatic weapons system operations, attention to detail is imperative for personnel safety. All maintenance checks, services, and tests should be performed only when safety is not in jeopardy. Before performing troubleshooting tasks, carefully read the operating instructions and follow all notes, cautions, and warnings.

## 3-4 GENERAL - CONTINUED

### NOTE

- MAINTENANCE MODE can be entered from POWER UP or NORMAL OPERATIONS MODE.
- If you enter MAINTENANCE MODE from POWER UP, there are more PDIU/PDCU System tests available, but the howitzer is removed from the POC Fire Net so no digital Fire Missions will be received. Notify the POC that this vehicle is entering the AFCS/PDFCS MAINTENANCE MODE and will be off the Fire Net.
- If you enter MAINTENANCE MODE from NORMAL OPERATIONS there are fewer PDIU/PDCU System tests available, but the howitzer is still on the POC Fire Net and can receive and process digital fire missions. Use this entry method when you do not plan to stay in MAINTENANCE MODE for very long.

Some faults cannot be determined using the MAINTENANCE MODE or any electrical equipment. Prior to entering MAINTENANCE MODE, use the symptom fault index, para 3-6, for fault identification.

## 3-5 AFCS AND PDIU FAULT DETECTION.

### 3-5.1 Power Up Built-In-Test (BIT).

The BIT is a self-test of the AFCS. This test occurs when the vehicle MASTER power is ON and the AFCS POWER switch (located on the DU), is placed to ON. By placing the AFCS POWER switch and PCU circuit breakers to ON, the DU will display the screen shown.

As each of the seven subsystems is tested, the -- will change and provide a subsystem condition. An OK condition (see illustration below), indicates a subsystem is 100% functional.

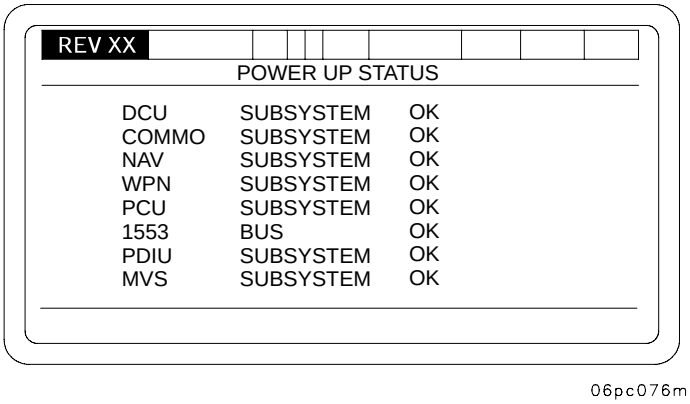


**NOTE**

If DCU contains an incorrect configuration, the AFCS will not allow the operator to select normal operations until a correct DCU software configuration is downloaded.

When configuration verification checking indicates that the executed software configuration is not the same as the acquired software configuration, a short error message “INVALID SOFTWARE CONFIGURATION”, “ACK” will appear on the soft key label line of the DU.

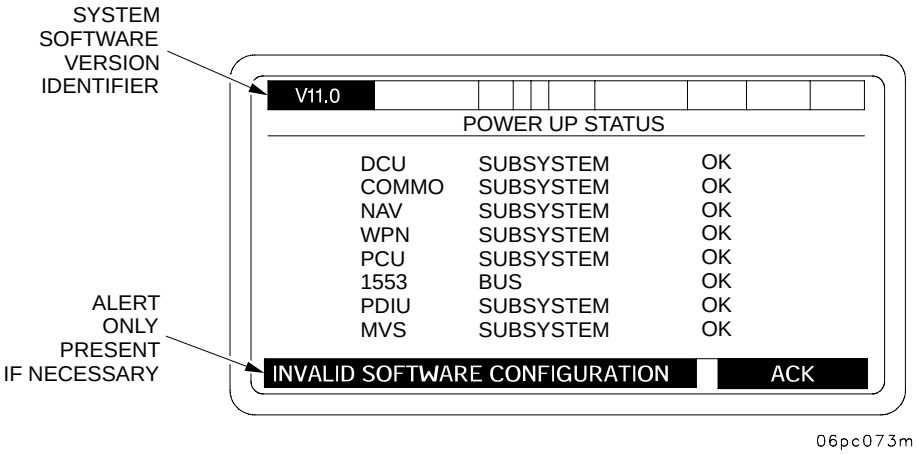


When the message is acknowledged, the AFCS will proceed to the “SELECT OPERATIONAL MODE” menu. To view detailed software configuration information for each LRU, MAINTENANCE should be selected, IAW procedure in para 3-5.2.

## 3-5 AFCS AND PDIU FAULT DETECTION.

### 3-5.1 Power Up Built-In-Test (BIT) - Continued

The display shown in the example below illustrates two conditions, DEGRADED and OUT.

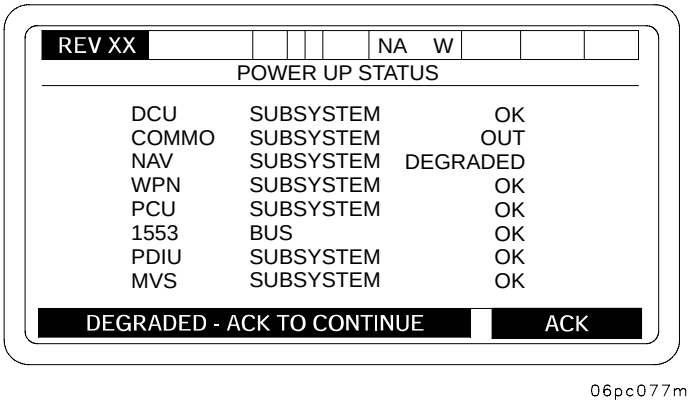


One condition is a DEGRADED condition. The DEGRADED condition indicates a subsystem is not 100% functional. When a degraded condition exists, it will be indicated in field 7 by one or a combination of these letters with the following meaning:

N - Navigation
A - GPS Aiding
C - Communication Processing
W - Weapon Controller

## 3-5 AFCS AND PDIU FAULT DETECTION - CONTINUED

### 3-5.1 Power Up Built-In-Test (BIT) - Continued

These two conditions, OUT and DGRD, will be tested to determine where the fault exists and the extent of the fault. After a fault has been detected (OUT or DGRD condition during self-test) press the illuminated soft key beneath the word ACK. After pressing the ACK key, the screen shown below will be displayed.

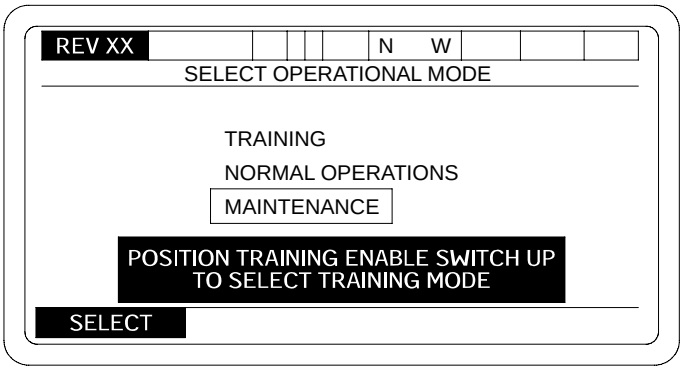


hipc4198

The display above depicts three modes: TRAINING, NORMAL OPERATION and MAINTENANCE. To select MAINTENANCE MODE, box in MAINTENANCE as shown in the illustration above. Press illuminated soft key beneath the word SELECT to enter maintenance mode master menu.

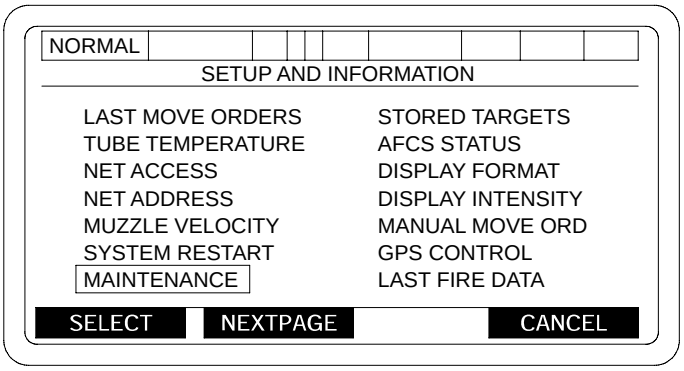


06pc213ma

The AFCS also provides the capability for the AFCS operator to transition from Normal Operational Mode functions to Maintenance Mode functions and back to Normal Operational Mode without having to perform a power down sequence, system restart, or Normal Operational Mode initialization procedures. This capability shall only be available when the AFCS has successfully completed an Normal Operational Mode initialization. Selection of the Maintenance Mode from the AFCS Mode Selection display shall not allow the AFCS operator to transition to Normal Operational Mode without first performing either a power down sequence or a system restart.

When Maintenance Mode functions are selected from the AFCS Operational Mode, the PDIU shall be directed to limit intrusive testing to only those tests which will not impact the ability of the AFCS to quickly respond to fire mission requests. When Maintenance Mode is entered from the AFCS Mode Selection display, the PDIU shall be allowed to perform its full range of intrusive tests.

## 3-5 AFCS AND PDIU FAULT DETECTION - CONTINUED

### 3-5.1 Power up Built-In-Test (BIT) - Continued

If a fire mission is received while the AFCS is in a Maintenance Mode function which was activated from the Operational Mode, the operator shall be prompted to either accept or reject the mission. Operator acceptance of the mission shall automatically terminate all Maintenance Mode function activity and transition to Normal Operational Mode fire mission processing. Operator rejection of the mission shall cause an operator abort of the fire mission and shall cause the AFCS to remain in the currently active Maintenance Mode function.

### 3-5.2 AFCS Status.

To display the AFCS STATUS menu:

a. Select MAINTENANCE from the SETUP AND INFORMATION menu. Press SELECT key. This will cause the MAINTENANCE MODE SELECT menu to be displayed.

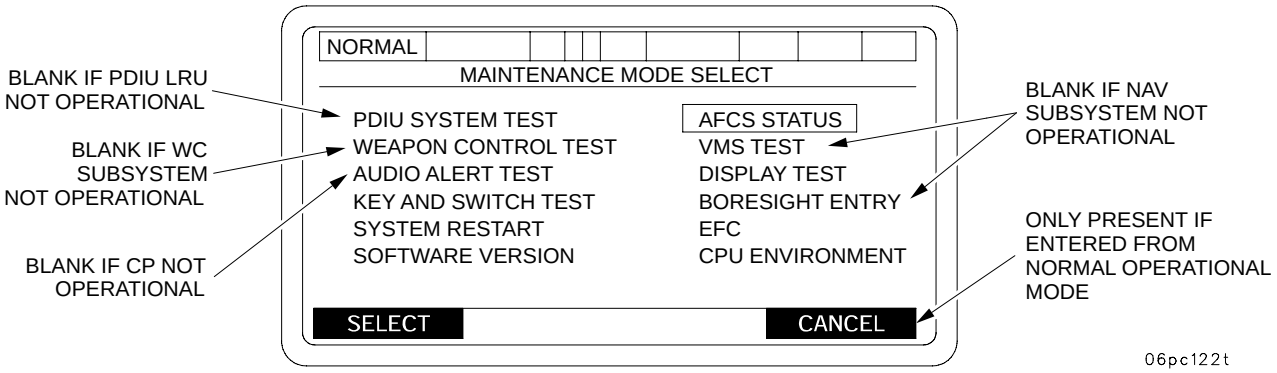


If MAINTENANCE is selected from NORMAL OPERATIONAL MODE, the MAINTENANCE screen will display “SELECT” and “CANCEL” options above soft keys 1 and 4 in field 16.

b. Select AFCS STATUS from the MAINTENANCE MODE SELECT menu. Press SELECT key. This will cause the AFCS STATUS menu to be displayed.

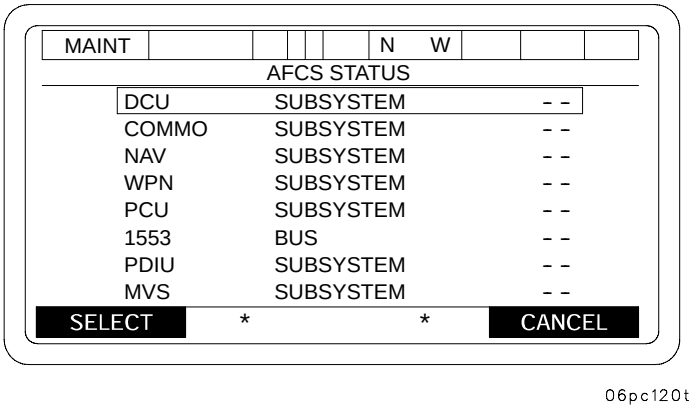


The AFCS STATUS menu will display the various subsystem faults. Using this fault list (showing Degraded Mode of each subsystem), you will be able to determine if Degraded Mode is acceptable depending on mission requirements.

# 3-5 AFCS AND PDIU FAULT DETECTION - CONTINUED

## 3-5.2 AFCS Status - Continued

Certain degraded subsystems will not interfere with AFCS operation or mission capability. It is important to know, however, which subsystem is degraded (and which BIT item has failed). Knowing which failure to compensate for/correct will allow you to carry on with your mission. The various LRUs communicate/send messages periodically within AFCS. Whenever an LRU has not sent a message within a certain amount of time, the LRU timer sends an LRU FAILED message. In the event you get an LRU FAILED message, go into MAINTENANCE menu, check AFCS STATUS. If LRU failed, notify unit maintenance.

The AFCS STATUS menu is used by unit maintenance personnel, as well as by the operator. The operator must notify unit maintenance of any subsystem listed with a status of DEGRADED or OUT, then no faults within that subsystem are indicated. Look at each subsystem carefully.

Select the subsystem in question. Further information will be displayed to help determine where the fault lies.

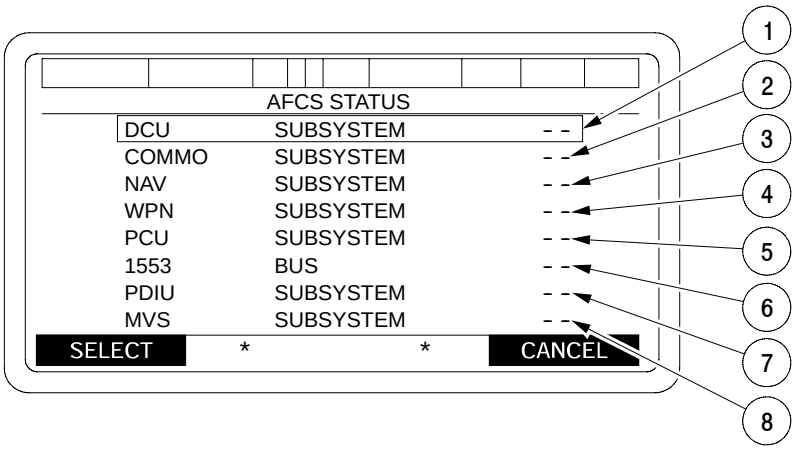


(1) = (OK, DEGRADED, OUT)

(2) = (OK, DEGRADED, OUT)

(3) = (OK, DEGRADED, OUT)

(4) = (OK, DEGRADED, OUT)

(5) = (OK, DEGRADED)

(6) = (OK, DEGRADED, OUT)

(7) = (OK, OUT)

(8) = (OK, OUT,--)Where -- indicates that the AFCS could not connect to the MVS

SELECT = SELECT A SUBSYSTEM

CANCEL = CANCEL and return to SETUP AND INFORMATION menu or INTERNAL MAINTENANCE menu

* = No test appears for these softkeys. Pressing FUNCTION KEY 2 or 3 will clear ET SIMULATED FAILURES

06pc118t

# 3-5 AFCS AND PDIU FAULT DETECTION - CONTINUED

## 3-5.2 AFCS Status - Continued

3-5.2.1 DCU SUBSYSTEM STATUS DISPLAY.

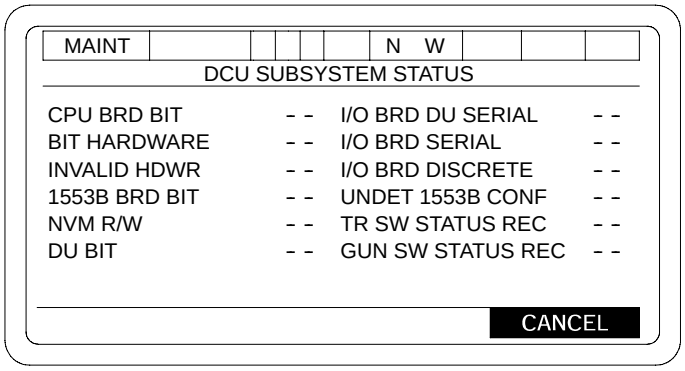


- - = (OK, FAIL)

CANCEL = Return to the AFCS STATUS display

06pc119t

3-5.2.2.2 COMMO SUBSYSTEM STATUS DISPLAY.

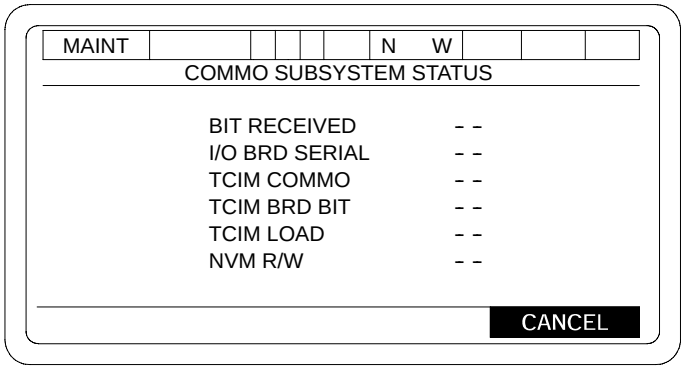


- - = (OK, FAIL)

CANCEL = Return to the AFCS STATUS display

06pc121t

# 3-5 AFCS AND PDIU FAULT DETECTION - CONTINUED

## 3-5.2 AFCS Status - Continued

### 3-5.2.3 NAV SUBSYSTEM STATUS DISPLAY

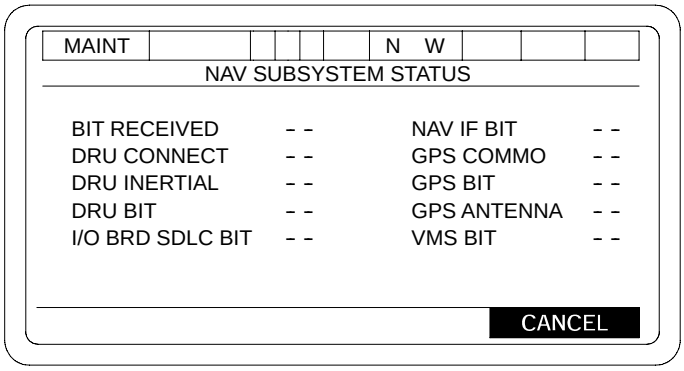


- - = (OK, FAIL)

CANCEL = Return to the AFCS STATUS display

06pc124t

### 3-5.2.4 WPN SUBSYSTEM STATUS DISPLAY.

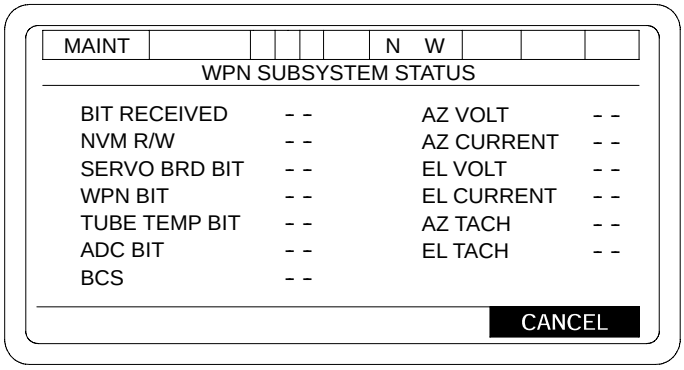


- - = (OK, FAIL)

CANCEL = Return to the AFCS STATUS display

06pc125t

# 3-5 AFCS AND PDIU FAULT DETECTION - CONTINUED

## 3-5.2 AFCS Status - Continued

3-5.2.5 PCU SUBSYSTEM STATUS DISPLAY.

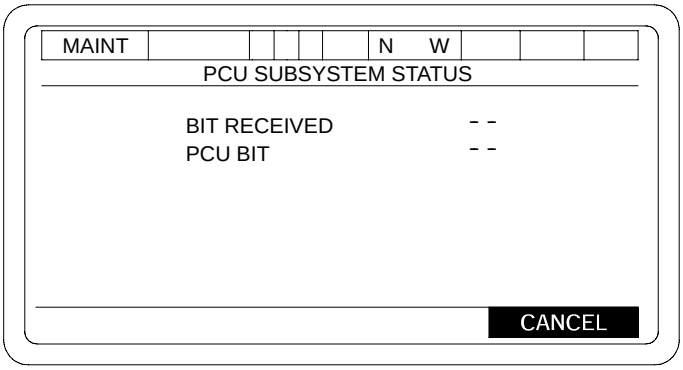


- - = (OK, FAIL)

CANCEL = Return to the AFCS STATUS display

06pc126t

3-5.2.6 1553 BUS STATUS DISPLAY.

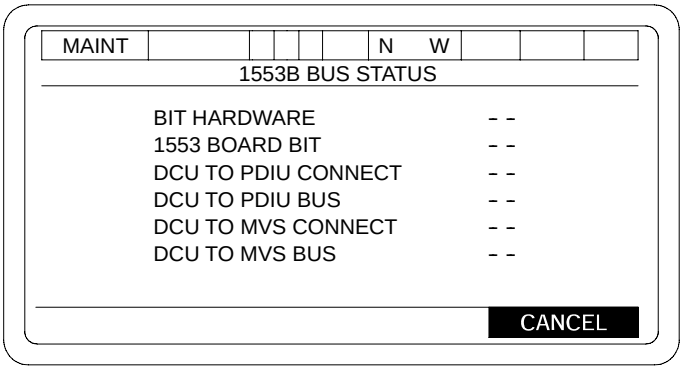


- - = (OK, FAIL)

CANCEL = Return to the AFCS STATUS display

06pc127t

# 3-5 AFCS AND PDIU FAULT DETECTION - CONTINUED

## 3-5.2 AFCS Status - Continued

3-5.2.7 PDIU SUBSYSTEM STATUS DISPLAY.

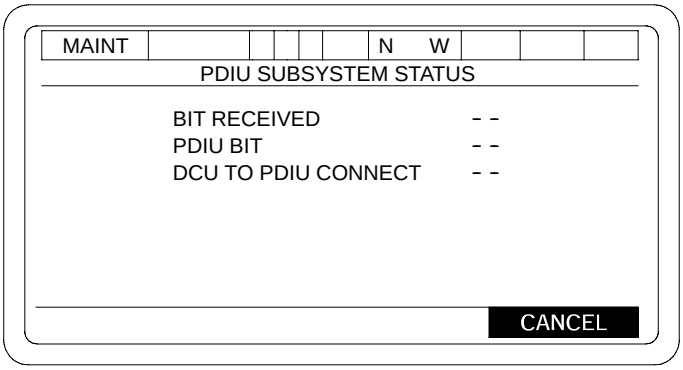


- - = (OK, FAIL)

CANCEL = Return to the AFCS STATUS display

06pc128t

3-5.2.8 MVS SUBSYSTEM STATUS DISPLAY.

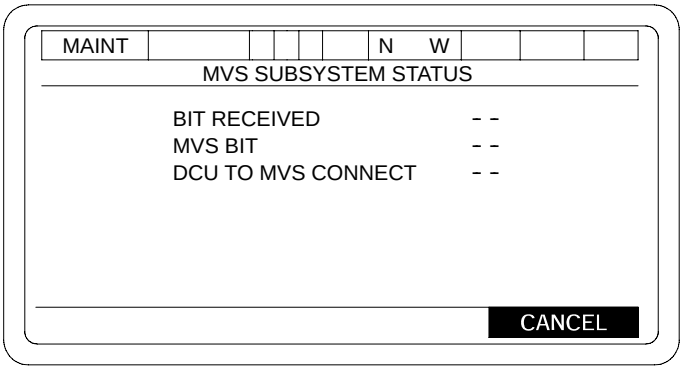


- - = (OK, FAIL)

CANCEL = Return to the AFCS STATUS display

06pc129t

## 3-5 AFCS AND PDIU FAULT DETECTION - CONTINUED

### 3-5.3 PDIU System Test.

To start the PDIU SYSTEM TEST, move the cursor with the arrow keys until the PDIU SYSTEM TEST is boxed, as shown below.

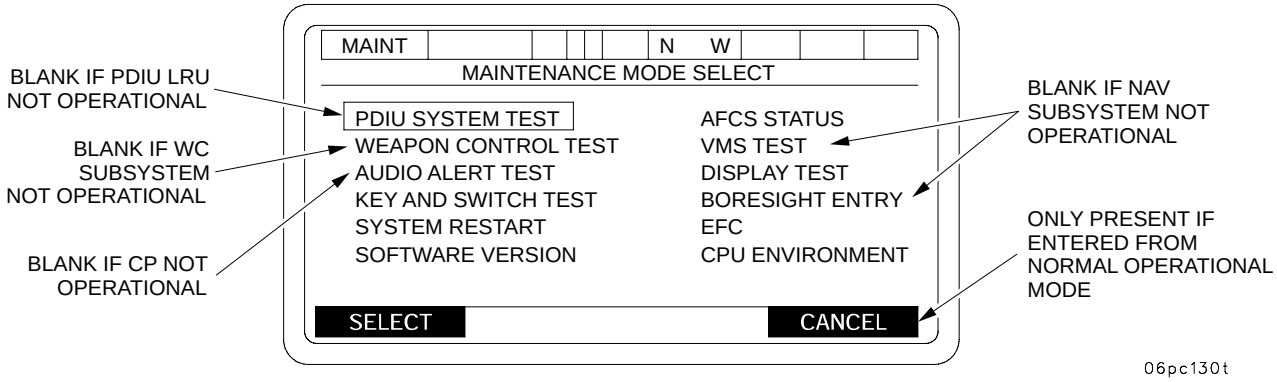


Press SELECT. The screen will display the prompt “ARE YOU SURE,” YES OR NO. Press “YES”. The screen will display the following message:

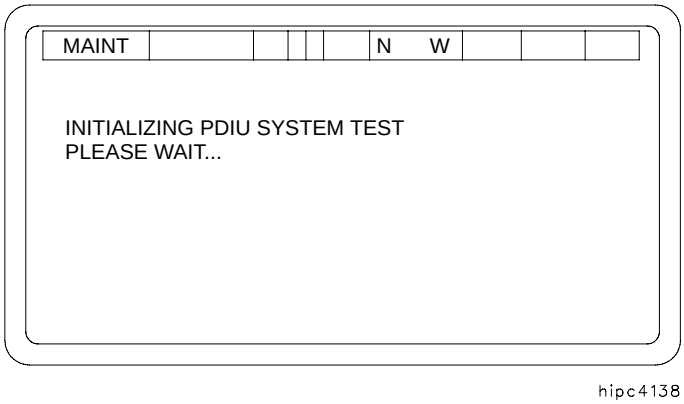


This message requires no action on your part. In 3 to 5 seconds, when the system is ready, it will be replaced with a menu display like the following:

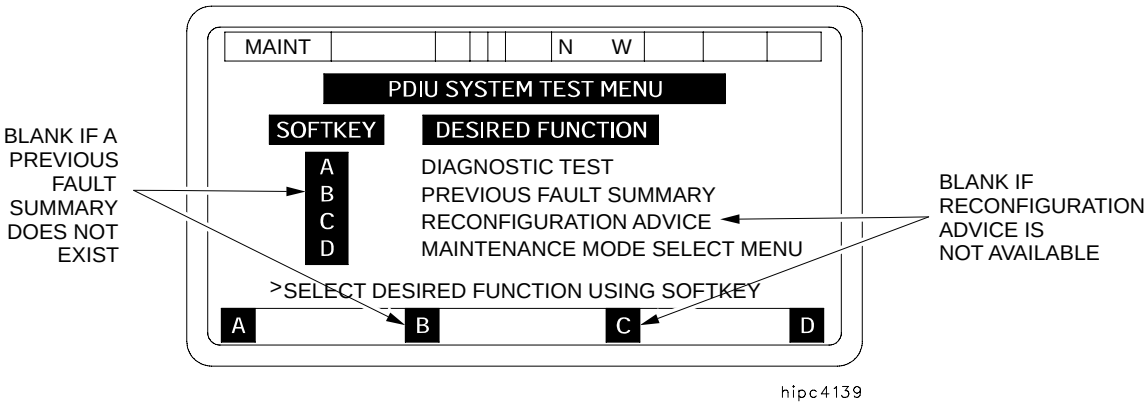


This menu allows you to select whichever function you wish to perform.

## 3-5 AFCS AND PDIU FAULT DETECTION - CONTINUED

### 3-5.3 PDIU System Test - Continued

**NOTE**

The previous Fault Summary and Reconfiguration Advice functions are not always available. These options will not be displayed if their functions cannot be performed. (The different menu screens that can be seen because of this are shown at the end of the description.)

Each of the four functions will now be described separately.

DIAGNOSTIC TEST

To perform DIAGNOSTIC TEST, press the “A” softkey.

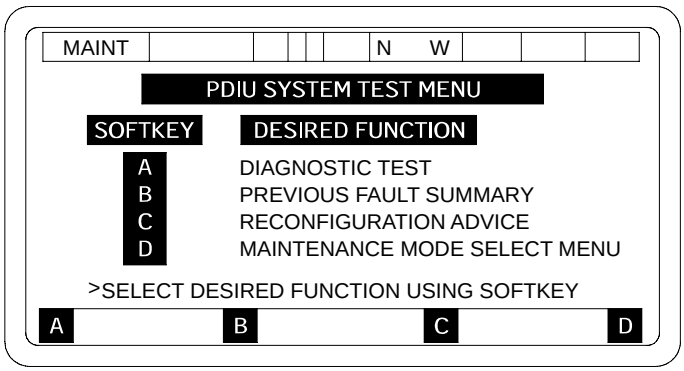


hipc4140

The next screen allows you to select which part of the system you would like to test based upon the problem you are troubleshooting. The Gun Positioning System will not be available until the hydraulics segment has been successfully tested (the PDIU should not be reset). To test the entire system, all four segments should be tested in the order they appear on the screen. As each segment passes its test, the next segment should be selected from this screen without resetting the system. If any of the segmented tests fail, the fault should be corrected, the AFCS should be reset and the testing should begin again with the first test. Continuing testing without resetting the system can result in false failures.

To perform any of the segment tests select “YES” when that segment appears behind “CHOOSE OPTION”.

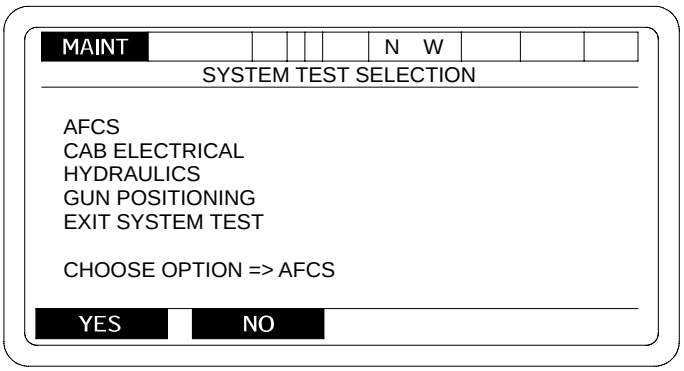


06pc377m

# 3-5 AFCS AND PDIU FAULT DETECTION - CONTINUED

## 3-5.3 PDIU System Test - Continued

The following screen will be displayed.

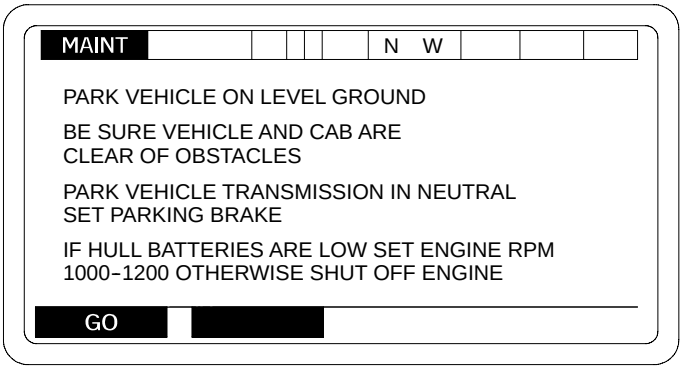


06pc378m

When you have completed the required actions, press GO softkey and testing will continue.

During the next few screens, you will be given the CANCEL softkey option. CANCEL is there in case you selected the DIAGNOSTIC TEST function (from the menu) by mistake or in case you changed your mind. When you press CANCEL, the system will display the PDIU SYSTEM TEST MENU again.

Throughout diagnostic testing, you will be given instructions. When you press GO, you are telling the system that you have done the task it asked for. It is important that you complete the task before pressing GO because many of the decisions that the system makes are based on the actions that you made. A typical instruction is shown below:

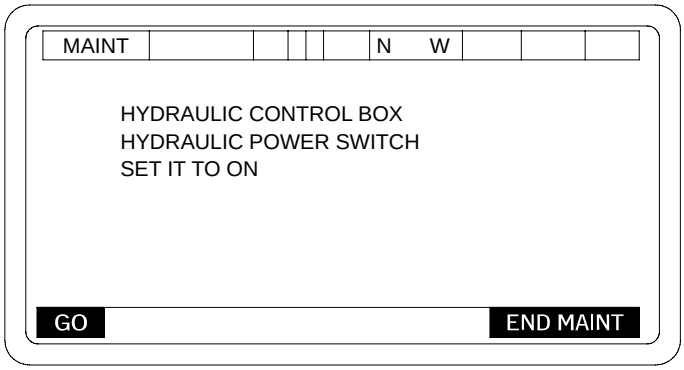


06pc411m

When you are instructed to perform an action such as the screen below, the PDIU measures the voltage of the switch.

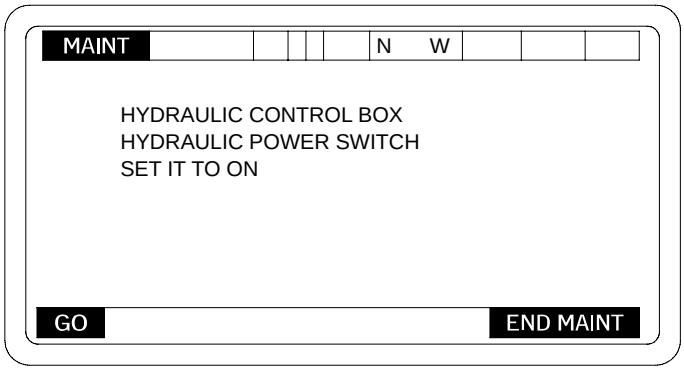


06pc408m

# 3-5 AFCS AND PDIU FAULT DETECTION - CONTINUED

## 3-5.3 PDIU System Test - Continued

If the result is not correct, then you are asked if you performed the action correctly, as shown in the screen below.

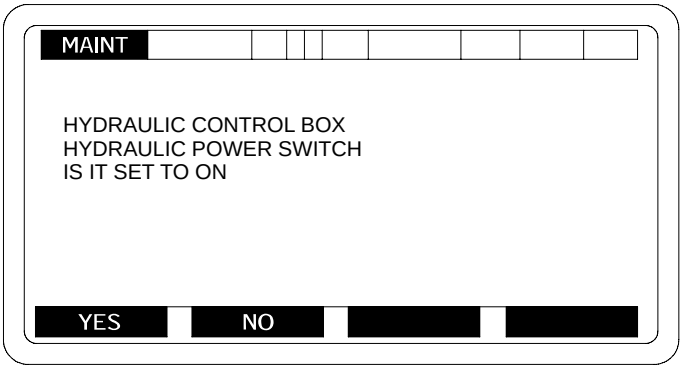


06pc409m

If you answer “YES”, a fault will be detected by the PDIU. If you answer “NO”, you will be given another chance to perform the action correctly. Then, if the action is not performed correctly, a fault will be detected by the PDIU.

Most of the displays in the main section of the DIAGNOSTIC TEST will include an END MAINT softkey at the bottom of the display. When this is present, you have the option of stopping the test at that point. If you press END MAINT, testing will immediately stop and you will see the Fault Summary display with all of the test results up to where you stopped. This feature is provided to allow you to return to normal operations with a minimum of delay if necessary. REMEMBER - When you press END MAINT, the system can only report the results of the test up to where you stopped. There may be further faults not detected.

During diagnostic testing, you will also be asked to answer questions. A typical question is shown below:

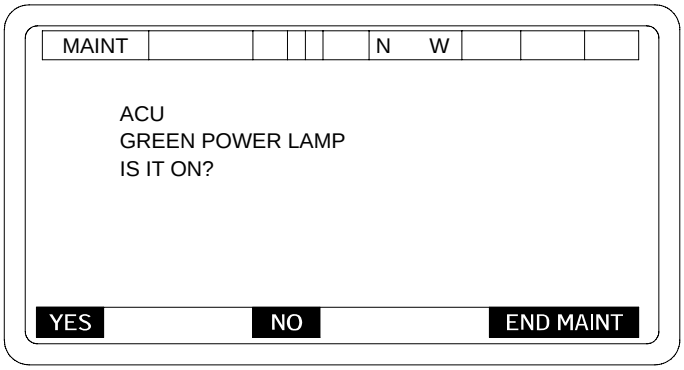


06pc407m

Questions will always be asked so that a YES or NO answer is possible by pressing the YES or NO softkeys. The system is using your ability to see, feel and hear to get the information it needs. It uses your answers to make decisions about functions that cannot be measured directly by the PDIU.

## 3-5 AFCS AND PDIU FAULT DETECTION - CONTINUED

### 3-5.3 PDIU System Test - Continued

Several times during diagnostic testing, you will see messages that start with the words “TEST IN PROGRESS” like the following screen:

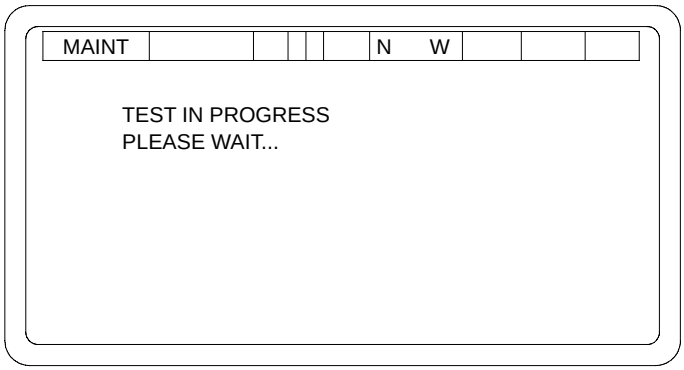


hipc4144

These screens have no labels for the softkeys at the bottom of the screen and require no response. They are intended to let you know that the system has recognized your last response and is busy with a long test operation. When it is ready to continue, the display will automatically change to a question or instruction message.

Most faults will be isolated as far as possible by the PDIU during the normal sequence of DIAGNOSTIC TEST. Usually, the test sequence will run to completion and display the Fault Summary screen. However, some faults can be isolated further. This requires extra testing which can involve disconnecting cables and opening the hydraulic compartment. When one of these faults is detected, the system will remember it until it has finished all of the fault detection tests. It will then display a special menu screen like the following:

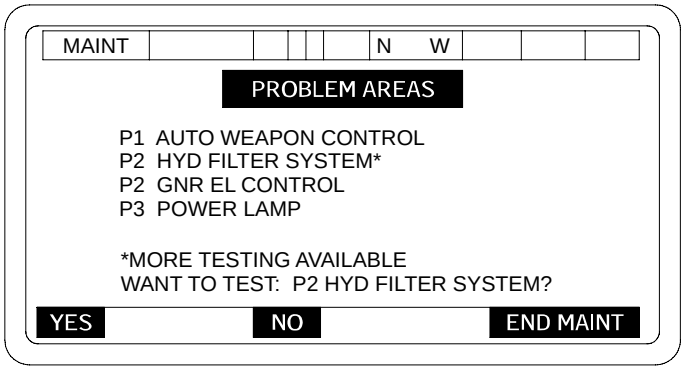


hipc4146

Each of the problem areas that requires extra testing will be displayed with an asterisk (*). The question line at the bottom will have the same name of the first extra test problem area. You can choose to continue testing this problem area by pressing YES. If you press NO, the name of the next extra test problem area will appear. As long as you continue to press NO, the names of the * problem areas will appear in the question, one at a time. If you decide not to do any of the extra testing, press END MAINT and the system will immediately display the Fault Summary.

# 3-5 AFCS AND PDIU FAULT DETECTION - CONTINUED

## 3-5.3 PDIU System Test - Continued

If you press the YES softkey for one of the problem areas, testing will continue with instructions and questions until the fault has been isolated as far as possible by the PDIU. When the extra testing is complete, you will see a screen like the following:

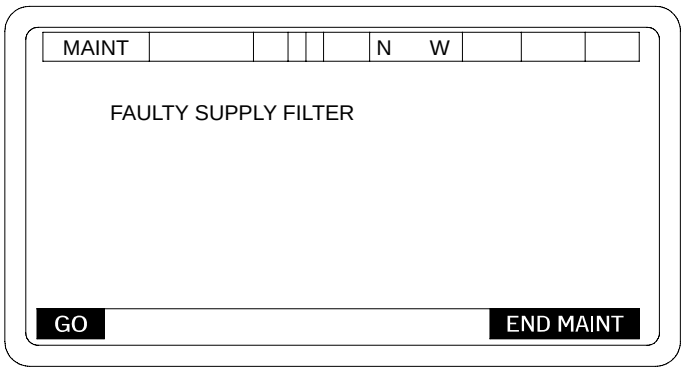


hipc4147

This screen may show one faulty LRU or a short list of possible faulty LRUs that must be isolated further by manual troubleshooting procedures. It tells you that the PDIU has done all of the testing it can. When you press GO, the Fault Summary screens will begin.

The first screen of the Fault Summary sequence will be definition of the Fault Priority Codes assigned to each fault message.

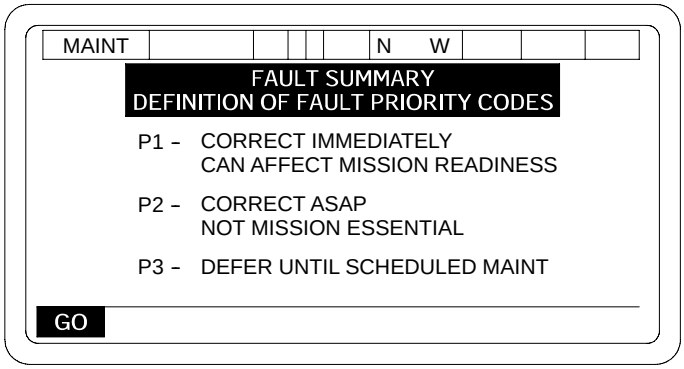


hipc4148

P1 - These faults require immediate attention. You have lost or may soon lose a major system function that may affect your mission capabilities.

P2 - These faults do not immediately affect your mission readiness but should be corrected as soon as possible.

P3 - These faults can be deferred until a scheduled maintenance period.

## 3-5 AFCS AND PDIU FAULT DETECTION - CONTINUED

### 3-5.3 PDIU System Test - Continued

The fault definition screen is followed by a Fault Summary list like the one shown on the next screen.

Press the GO softkey to continue.

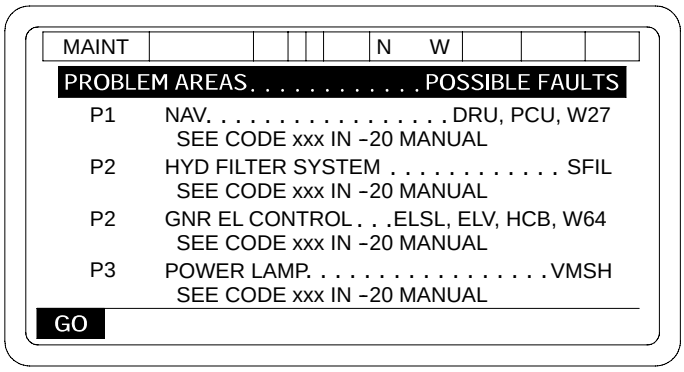


hipc4149

The Fault Summary screens are a list of all of the problems found during screen DIAGNOSTIC TEST. When no problems have been detected, this will simply say “NO FAULTS FOUND” and the Definition of Fault Priority Codes screen will not be shown. However, when problems have been detected, a list like the one above will appear.

When the Fault Summary displays problem areas, it also displays a list of possible faulty LRUs for each problem area and a -20 manual code number. When only one LRU is listed for a problem area, DIAGNOSTIC TEST has determined that the LRU is definitely faulty and must be replaced. When more than one LRU (separated by commas) is listed as a possible fault for a problem area, further isolation by Unit Maintenance is required to determine which one of the LRUs listed is faulty.

The code number (xxx) listed in the “SEE CODE XXX IN -20 MANUAL” message is a reference to an index in the -20 manual which lists the page where the correct manual troubleshooting procedure can be found.

**NOTE**

All of the information in the Fault Summary screens should be reported to Unit Maintenance. It is a good idea to copy the list of problems and possible faults before pressing GO. If you forget or don’t have time to copy all the information now, it can be redisplayed by selecting the Previous Fault Summary option in the PDIU SYSTEM TEST MENU screen the next time it is displayed, even if power has been removed.

# 3-5 AFCS AND PDIU FAULT DETECTION - CONTINUED

## 3-5.3 PDIU System Test - Continued

The Fault Summary list can take up to 3 screens. When you have finished viewing or copying the information on each Fault Summary screen, press GO to continue. If more faults were detected, the next Fault Summary screen will be displayed. Some faults may not appear due to limited space on the screens. After corrective actions have been accomplished, the test should be re-run to ensure no additional faults are detected. If Reconfiguration Advice is available for the detected faults, you will be asked the following question:

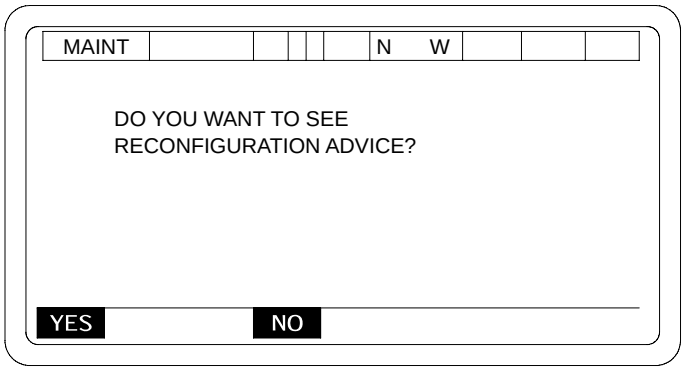


hipc4150

This screen offers you the chance to get further information on what backup modes of operation are available for subsystems that are not operational. If you press YES, a screen like the following will appear:

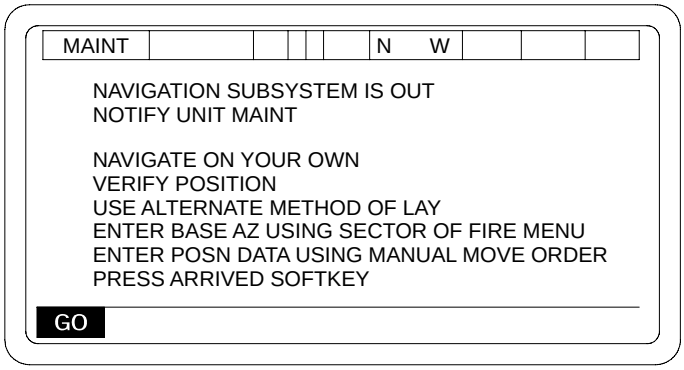


hipc4151

# 3-5 AFCS AND PDIU FAULT DETECTION - CONTINUED

## 3-5.3 PDIU System Test - Continued

Reconfiguration Advice may take more than one screen depending on which (and how many) subsystems are not operational. After you have read each screen, press the GO softkey to continue.

After all Reconfiguration Advice messages have been read, you will be given two screens of instructions that will return the vehicle to a given state. At this point, testing is complete. When you press the final GO, the screen will display the PDIU SYSTEM TEST MENU again.

General Notes About DIAGNOSTIC TEST

The sequence of messages and displays that you see during DIAGNOSTIC TEST will vary depending on the number of faults present in the vehicle. The system will choose its own path through the tests and guide you with instructions. Don't be concerned if you see messages and questions you haven't seen before. The system is simply troubleshooting a fault you haven't had before.

PREVIOUS FAULT SUMMARY

To view the PREVIOUS FAULT SUMMARY, press the B softkey.

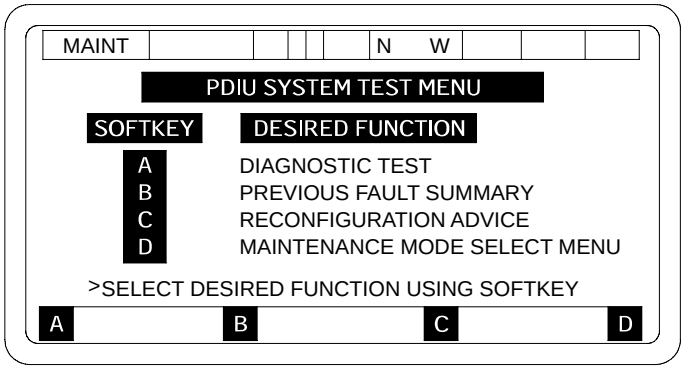


hipc4140

The PREVIOUS FAULT SUMMARY is a list of all the problems found during the last DIAGNOSTIC TEST performed. If no problems were detected, the following message will be displayed:

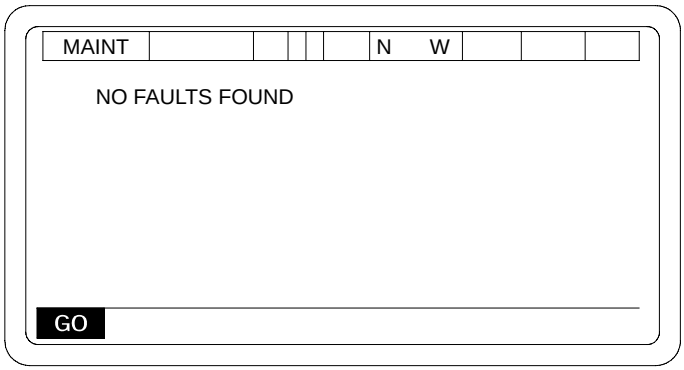


hipc4152

## 3-5 AFCS AND PDIU FAULT DETECTION - CONTINUED

### 3-5.3 PDIU System Test - Continued

**DELETED**

## 3-5 AFCS AND PDIU FAULT DETECTION - CONTINUED

### 3-5.3 PDIU System Test - Continued

**DELETED**

# 3-5 AFCS AND PDIU FAULT DETECTION - CONTINUED

## 3-5.3 PDIU System Test - Continued

If the last DIAGNOSTIC TEST was aborted before completion, you will also see the following message:

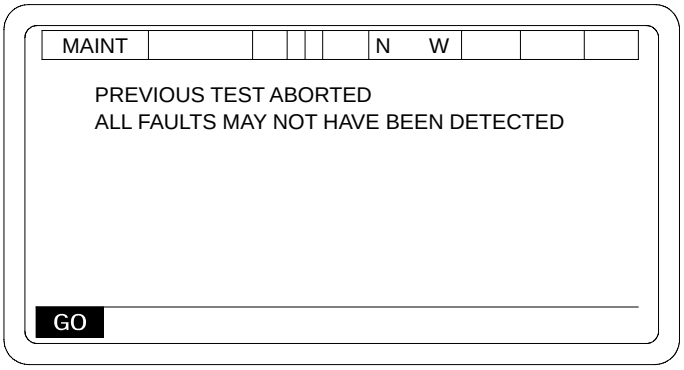


hipc4153

When all screens in the Previous Fault Summary display sequence have been viewed, the PDIU SYSTEM TEST MENU will automatically be displayed again.

RECONFIGURATION ADVICE

To view Background Monitoring Mode RECONFIGURATION ADVICE, press the C softkey.

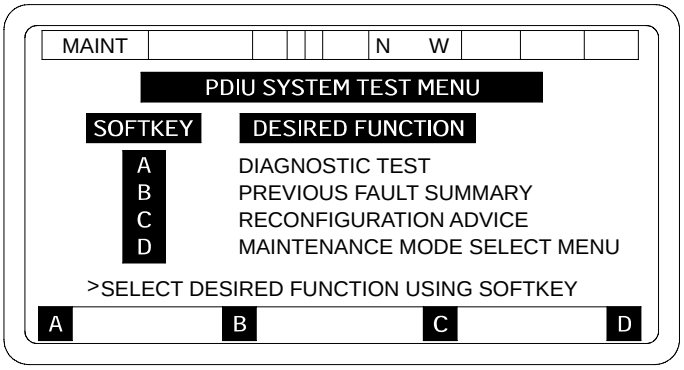


hipc4140

A screen like the following will be displayed:

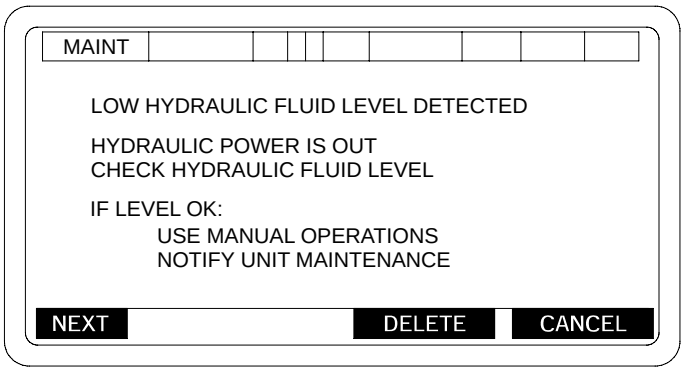


hipc4154

# 3-5 AFCS AND PDIU FAULT DETECTION - CONTINUED

## 3-5.3 PDIU System Test - Continued

RECONFIGURATION ADVICE offers you the opportunity to get more information on what Backup Modes of Operation are available for subsystems that are not operational. This information is displayed for each warning message sent to the DCU during Normal Operations. RECONFIGURATION ADVICE can take several screens to display as each warning message/advisory information is displayed on a separate screen. You can cycle through and delete the messages as desired.

If you press NEXT, the next warning message and its advisory information will be displayed. If you press DELETE, the warning message and its advisory information displayed will be deleted and the next warning message will appear.

Throughout RECONFIGURATION ADVICE, the CANCEL softkey is available to you. If you press CANCEL, you will exit from RECONFIGURATION ADVICE and the PDIU SYSTEM TEST MENU will be displayed again.

After all messages have been viewed, the following display will appear:

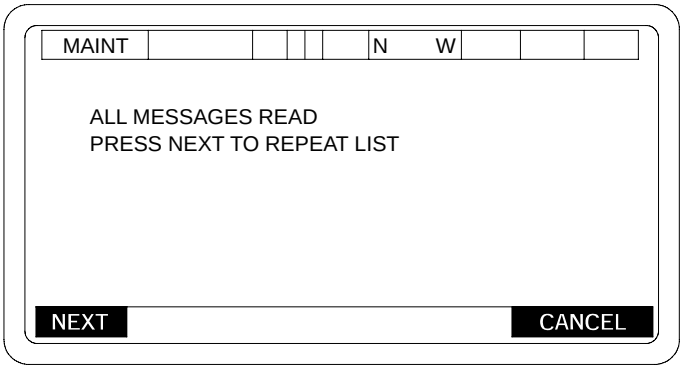


hipc4155

You can press NEXT to cycle through all the messages which were not deleted. Or press CANCEL to exit.

When the last message is displayed and there are no more messages to view, a display like the following will appear:

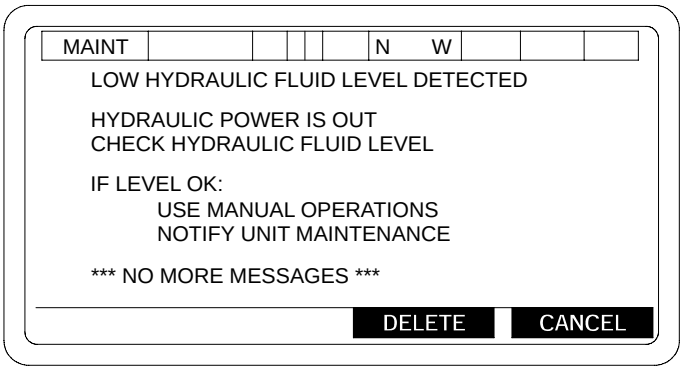


hipc4156

If you press DELETE, the warning message and its advisory information will be deleted and the PDIU SYSTEM TEST MENU will be displayed again.

# 3-5 AFCS AND PDIU FAULT DETECTION - CONTINUED

## 3-5.3 PDIU System Test - Continued

MAINTENANCE MODE SELECT MENU

To exit from PDIU SYSTEM TEST, press the D softkey.

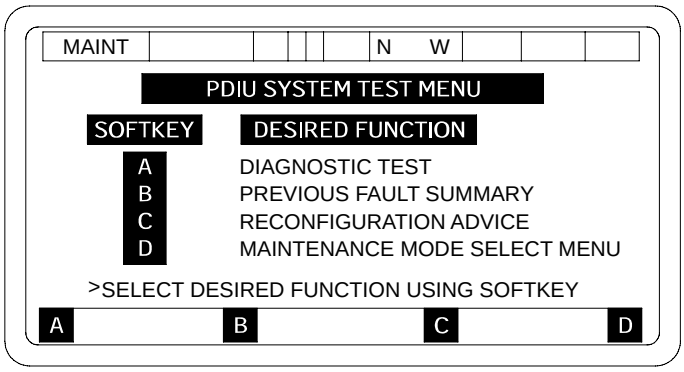


hipc4140

Pressing D will terminate PDIU SYSTEM TEST and the MAINTENANCE MODE SELECT menu screen will appear. The PDIU will automatically enter into its Background Monitoring Mode.

PDIU SYSTEM TEST MENU VARIATIONS

The following screens show all of the different menus that can be displayed when entering the PDIU SYSTEM TEST. As mentioned above, all options are not always available. An option will not be displayed if its function cannot be performed.

In the following screen, all options are available to the user.

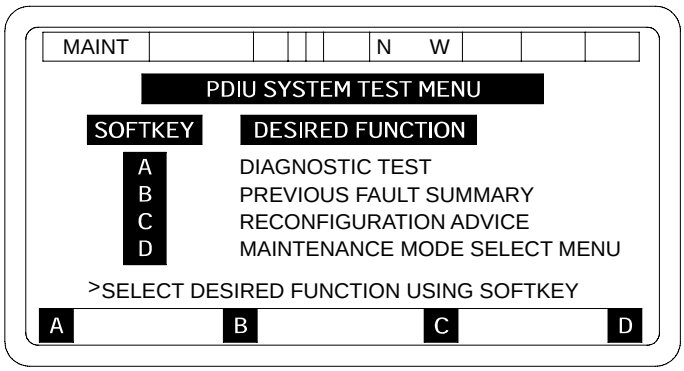


hipc4140

## 3-5 AFCS AND PDIU FAULT DETECTION - CONTINUED

### 3-5.3 PDIU System Test - Continued

The RECONFIGURATION ADVICE option is missing from the following menu screen. RECONFIGURATION ADVICE will only be available for warning messages sent to the DCU during Normal Operations and for certain faults detected by the AFCS.

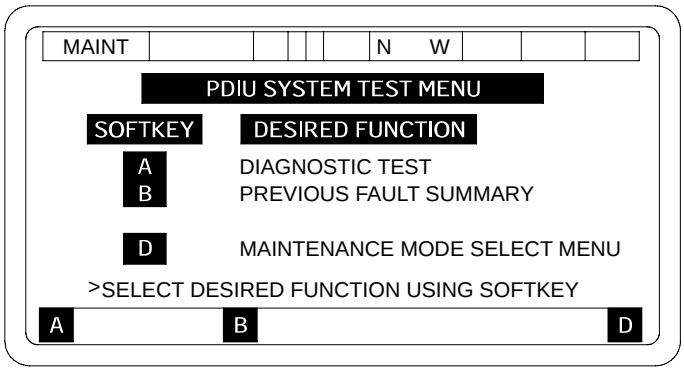


hipc4157

The PREVIOUS FAULT SUMMARY option is missing from the following menu screen. A PREVIOUS FAULT SUMMARY will only be available if the last DIAGNOSTIC TEST performed was aborted while in progress and faults had been detected or if the last DIAGNOSTIC TEST was completed.

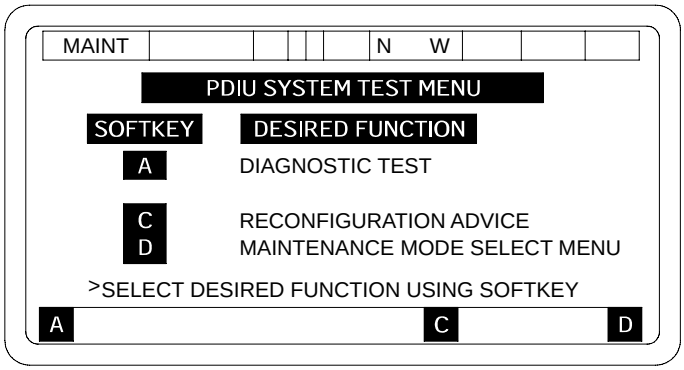


hipc4158

# 3-5 AFCS AND PDIU FAULT DETECTION - CONTINUED

## 3-5.3 PDIU System Test - Continued

Both the PREVIOUS FAULT SUMMARY and RECONFIGURATION ADVICE options are missing from the following menu screen. Neither of these options can be performed. DIAGNOSTIC TEST and MAINTENANCE MODE SELECT MENU options will always be available.

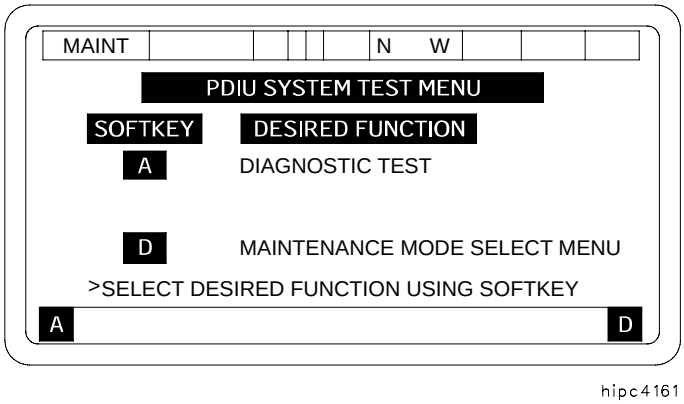


DIAGNOSTIC TEST is the way you perform all diagnostic testing.

MAINTENANCE MODE SELECT MENU is the way you end PDIU system testing and return to AFCS operations.

## 3-5 AFCS AND PDIU FAULT DETECTION - CONTINUED

### 3-5.4 Weapon Control Test.

This test checks the elevation and azimuth tachometers which control the speed of the gun tube and cab movement during automatic positioning; LOAD, LAY and STOW.

This test SHOULD NOT be performed in accordance with the standard vehicle setup condition. Vehicle setup conditions for THIS test are:

a. Park vehicle with transmission in neutral, engine running.

b. Set parking brakes.

c. Remove gun tube from travel lock and place travel lock in lower/unlock position.

d. Unlock cab traverse lock.

e. Set DCU POWER switch to ON.

f. Place hydraulic control box POWER switch to ON.

g. Set GUN SERVO switch to ON.

This test will be used when directed by troubleshooting procedures, or when the tachometers appear to malfunction.

If test results indicate tachometer malfunctions, notify unit maintenance personnel for corrective actions.

Elevating gun tube will cause numbers to appear/change (as CHIEF OF SECTION control handles are elevated) in EL TACH box. If numbers do not change/move, your TACH is not working.

Select WEAPON CONTROL TEST from MAINTENANCE MODE SELECT menu.

The first menu to be displayed will be the WEAPON CONTROL INSTRUCTIONS menu and may contain two pages of instructions. The second display will be the WEAPON CONTROL TEST BEGIN menu followed by several WEAPON CONTROL TEST menus.

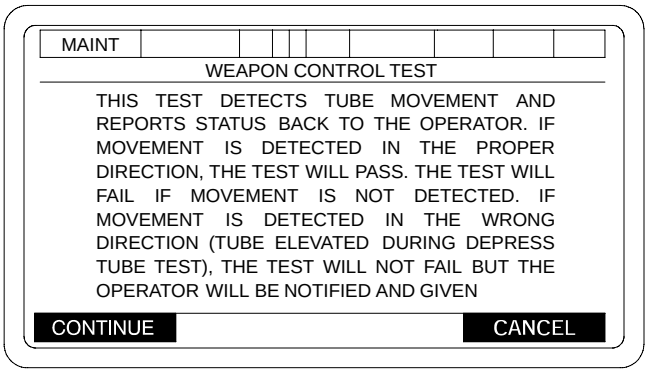


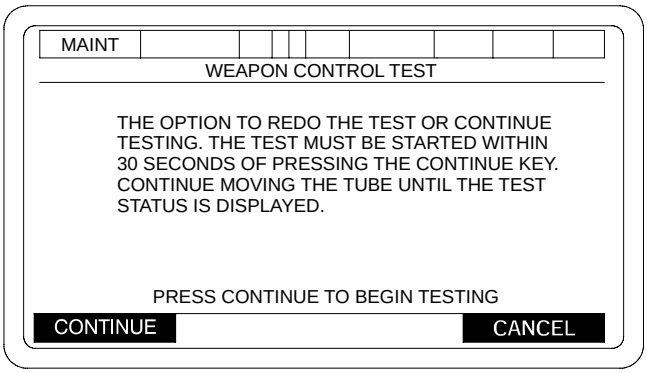


06pc131t

# 3-5 AFCS AND PDIU FAULT DETECTION - CONTINUED

## 3-5.4 Weapon Control Test - Continued

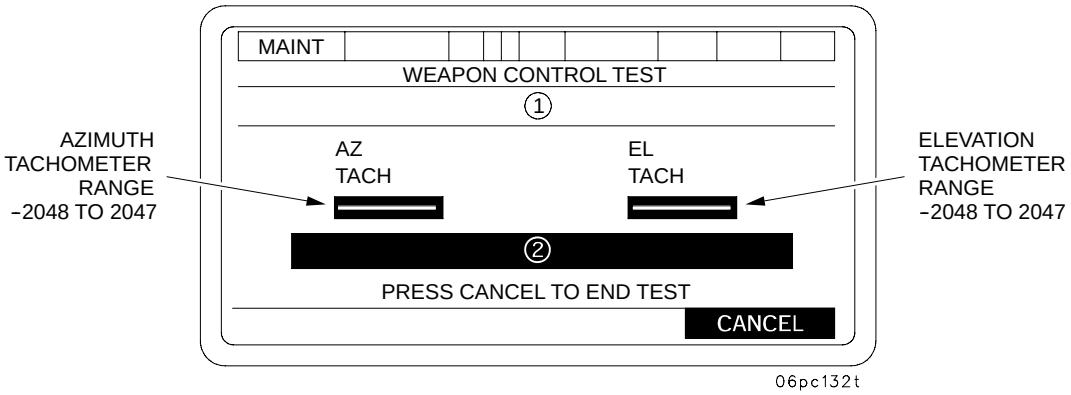


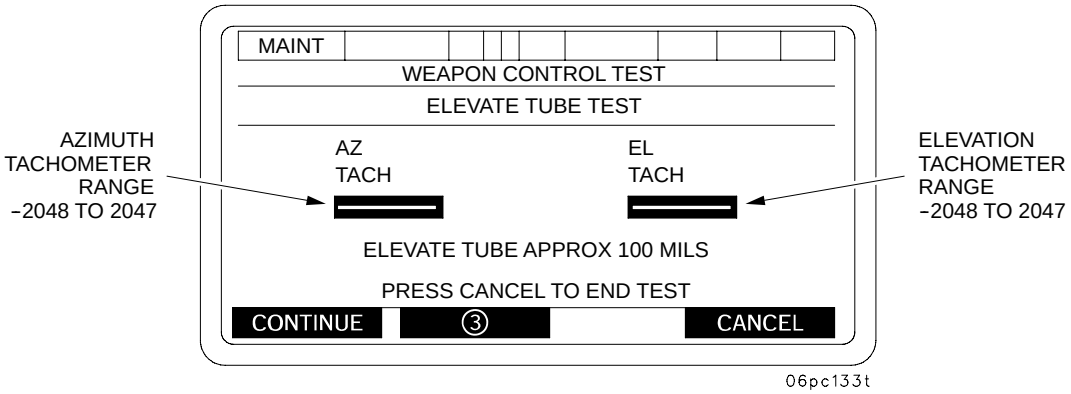


For Messages displayed in Fields 1 and 2 during the WEAPON CONTROL TEST see Table 3-1.

| | | |
|---|---|---|
| | CONTINUED: | Go to next text phase |
| 3 | REDO: | Rerun the current test phase |
| | CANCEL: | End the test |

Elevating gun tube will cause numbers to appear/change (as CHIEF OF SECTION control handles are elevated) in EL TACH box. If numbers do not change/move, your TACH is not working.

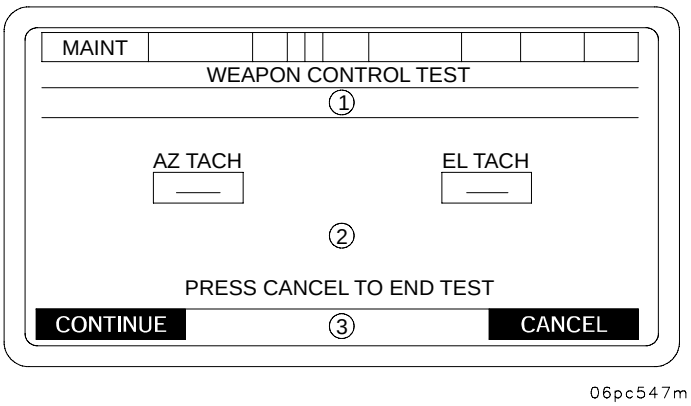

# 3-5 AFCS AND PDIU FAULT DETECTION - CONTINUED

## 3-5.4 Weapon Control Test - Continued

Depressing gun tube will cause numbers to appear/change (as CHIEF OF SECTION control handles are depressed) in EL TACH box. If numbers do not change/move, your TACH is not working.

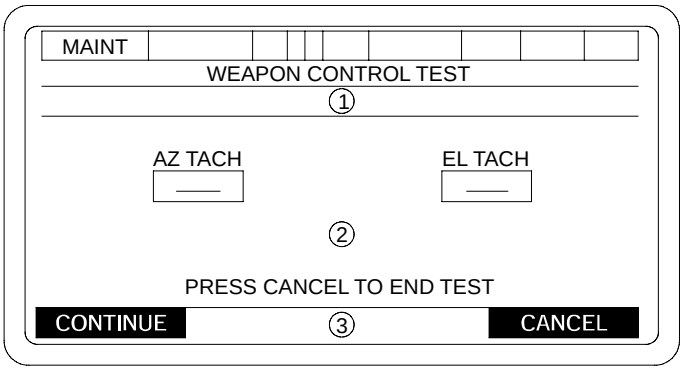


06pc547m

Traversing gun tube to right will cause numbers to appear/change (as CHIEF OF SECTION control handles are rotated to right) in AZ TACH box. If numbers do not change/move, your TACH is not working.

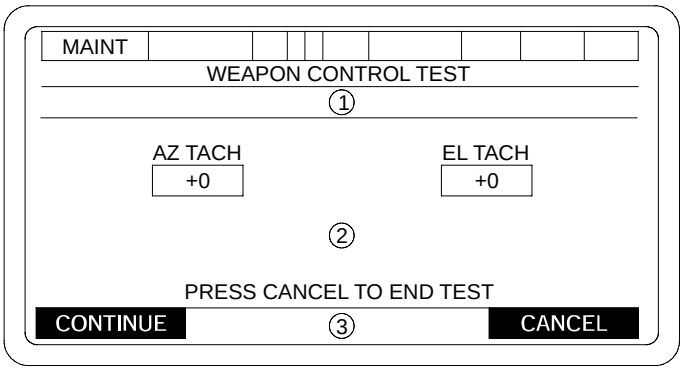


06pc420m

Traversing gun tube to left will cause numbers to appear/change (as CHIEF OF SECTION control handles are rotated to left) in AZ TACH box. If numbers do not change/move, your TACH is not working.

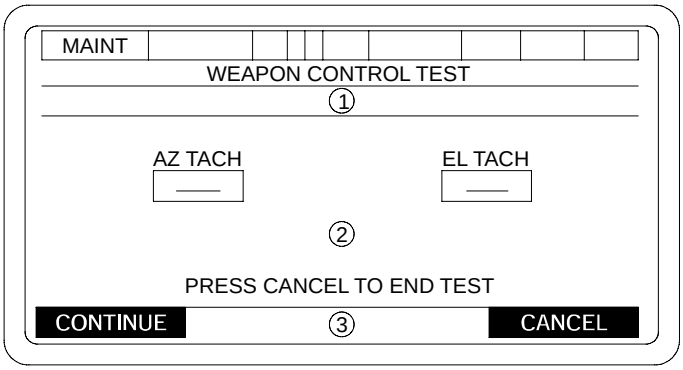


06pc547m

## 3-5 AFCS AND PDIU FAULT DETECTION - CONTINUED

### 3-5.4 Weapon Control Test - Continued

The following table describes the messages to be displayed in Fields 1 and 2 during the Weapon Control Test.

**Table 3-1 WEAPON CONTROL TEST MESSAGES**

| TEST PHASE | 1 | 2 | 3 |
|---|---|---|---|
| 1 | "ELEVATE TUBE TEST" | "ERROR IN TUBE MOVEMENT SELECT CONTINUE, REDO, OR CANCEL" | "REDO" |
| 1 | "ELEVATE TUBE TEST" | "TEST FAILED - PRESS REDO TO RE-RUN OR CONTINUE FOR NEXT TEST PHASE" | "REDO" |
| 1 | "ELEVATE TUBE TEST" | "TEST PASSED PRESS CONTINUE FOR NEXT TEST PHASE" | BLANK |
| 2 | "DEPRESS TUBE TEST" | "ERROR IN TUBE MOVEMENT SELECT CONTINUE, REDO, OR CANCEL" | "REDO" |
| 2 | "DEPRESS TUBE TEST" | "TEST FAILED - PRESS REDO TO RE-RUN OR CONTINUE FOR NEXT TEST PHASE" | "REDO" |
| 2 | "DEPRESS TUBE TEST" | "TEST FAILED - PRESS REDO TO RE-RUN OR CONTINUE FOR NEXT TEST PHASE" | BLANK |
| 3 | "TRAVERSE TUBE LEFT TEST" | "TEST PASSED PRESS CONTINUE FOR NET TEST PHASE" | "REDO" |
| 3 | "TRAVERSE TUBE LEFT TEST" | "ERROR IN TUBE MOVEMENT SELECT CONTINUE, REDO, OR CANCEL" | "REDO" |
| 3 | "TRAVERSE TUBE LEFT TEST" | "TEST FAILED - PRESS REDO TO RE-RUN OR CONTINUE FOR NEXT TEST PHASE" | BLANK |
| 4 | "TRAVERSE TUBE RIGHT TEST" | "ERROR IN TUBE MOVEMENT SELECT CONTINUE, REDO, OR CANCEL" | "REDO" |
| 4 | "TRAVERSE TUBE RIGHT TEST" | "TEST FAILED - PRESS REDO TO RE-RUN OR CONTINUE TO REPEAT TEST" | "REDO" |
| 4 | "TRAVERSE TUBE RIGHT TEST" | "TEST PASSED PRESS CONTINUE TO REPEAT TEST" | BLANK |
| 1, 2, 3, or 4 | | "TUBE MOVEMENT DETECTED WAS IN ERROR" | "SELECT PASS, FAIL, OR REDO" |

## 3-5 AFCS AND PDIU FAULT DETECTION - CONTINUED

### 3-5.5 Vehicle Motion Sensor Test.

This test is designed to check Vehicle Positioning System. The VMS provides signals to the AFCS that aid in the location and positioning of vehicle (coordinates).

This test SHOULD be performed under standard vehicle setup conditions (para 3-5.3). This test is used whenever directed by troubleshooting procedures, or when NAV DEGRADED is displayed on the DU and you get ZUPT requests after about 4 minutes of travel.

If test results indicate that VMS is not properly functioning, notify unit maintenance personnel for corrective action.

a. Select VMS TEST from MAINTENANCE MODE SELECT menu.

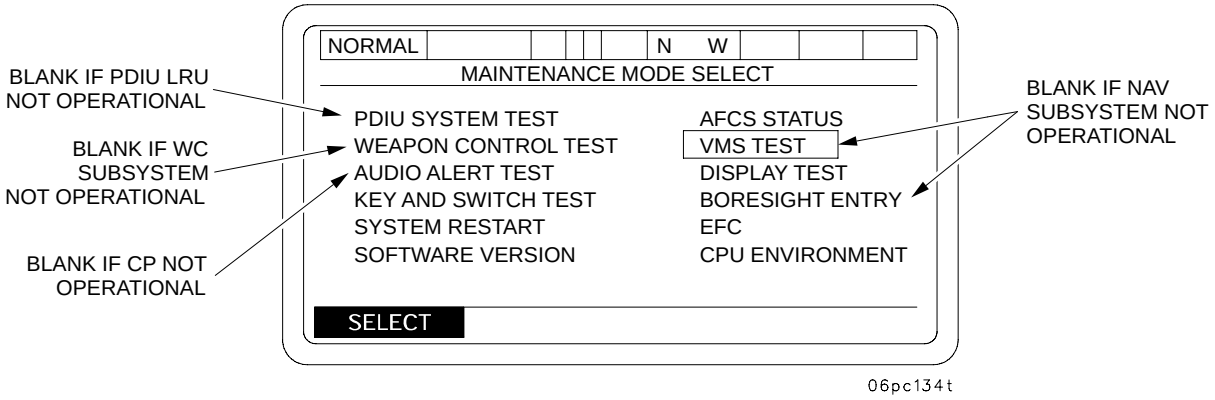

# 3-5 AFCS AND PDIU FAULT DETECTION - CONTINUED

## 3-5.5 Vehicle Motion Sensor Test - Continued

This test is run automatically.

b. Depressing soft key under CANCEL will end test and take you back to MAINTENANCE MODE SELECT menu.

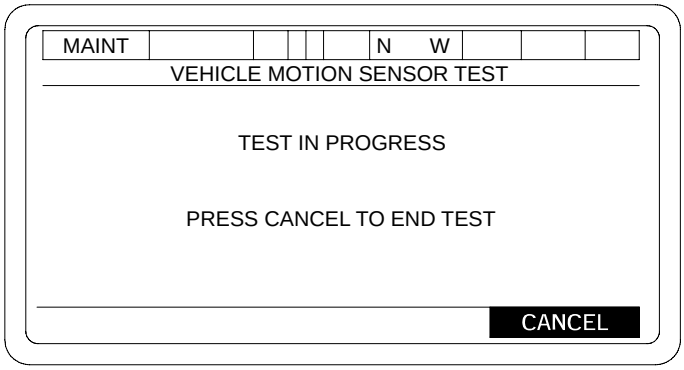


hipc4167

If test results indicate a fault, determine if this degraded mode is acceptable. If not, notify unit maintenance.

Test results can show any of the following:

RESULT -- VMS GOOD

RESULT -- VMS BAD

RESULT -- CAB SIDE VMS MODEM BAD

RESULT -- CHASSIS SIDE VMS MODEM BAD

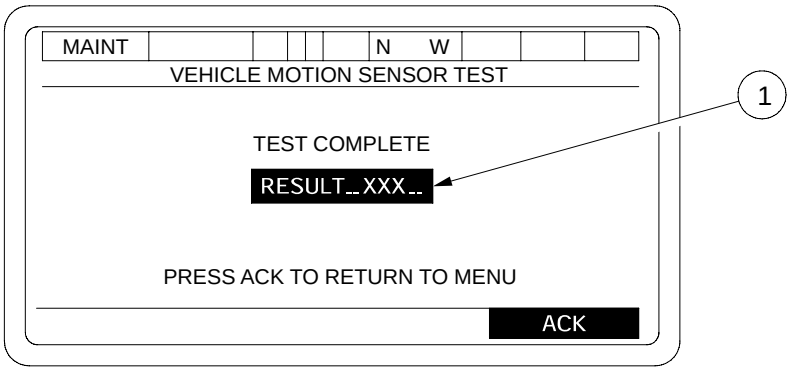


hipc4168

1 VMS GOOD
OR
CHASSIS SIDE VMS MODEM BAD
OR
CAB SIDE VMS MODEM BAD
OR
VMS BAD

c. When test is ended, depress soft key under ACK. This will take you back to MAINTENANCE MODE SELECT menu.

## 3-5 AFCS AND PDIU FAULT DETECTION - CONTINUED

### 3-5.6 Audio Alert Test.

This test checks the AFCS communications system fire mission alert notification. During this test, all crewmember's intercom control boxes should emit a repeating tone for 5 seconds. Checks of CVC helmets and intercoms should be performed.

This test should be performed under the standard vehicle setup conditions.

This test is used when directed by troubleshooting procedures, or if testing intercom/CVC is desirable.

a. Select AUDIO ALERT TEST from MAINTENANCE MODE SELECT menu. Press SELECT KEY. AUDIO ALERT TEST is displayed.

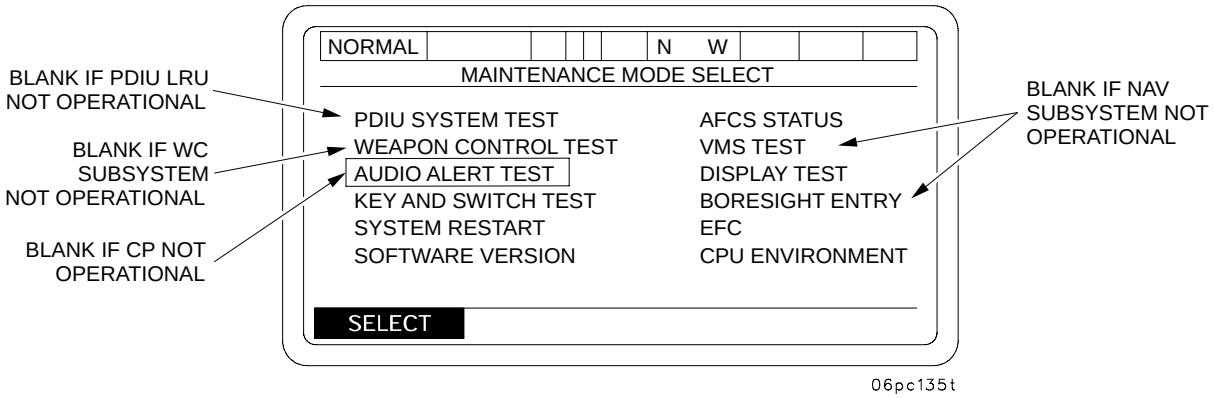


b. Depressing soft key under CANCEL will take you back to MAINTENANCE MODE SELECT menu.

c. Depressing soft key under CONTINUE will start your AUDIO ALERT TEST.

d. When your AUDIO ALERT TEST is completed, you may depress soft key under CONTINUE to repeat test.

e. When test is completed, depress soft key under CANCEL to return to MAINTENANCE MODE SELECT menu.

f. If there is fault with your intercom/AFCS, notify unit maintenance.

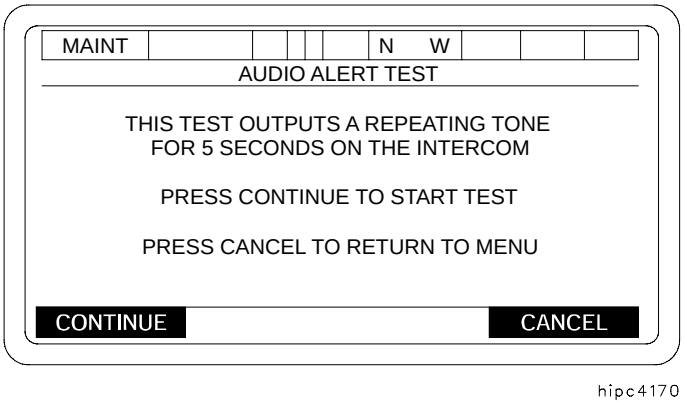

## 3-5 AFCS AND PDIU FAULT DETECTION - CONTINUED

### 3-5.7 Display Test.

This test checks the uniform color contrast in the screen on the display unit. Information appearing on the screen may become too light to read.

This test should be performed under standard vehicle setup condition (para 3-5.3).

This test will be used when directed by troubleshooting procedures, or if testing of DCU screen is desirable.

a. Select DISPLAY TEST from MAINTENANCE MODE SELECT menu. Press SELECT key.

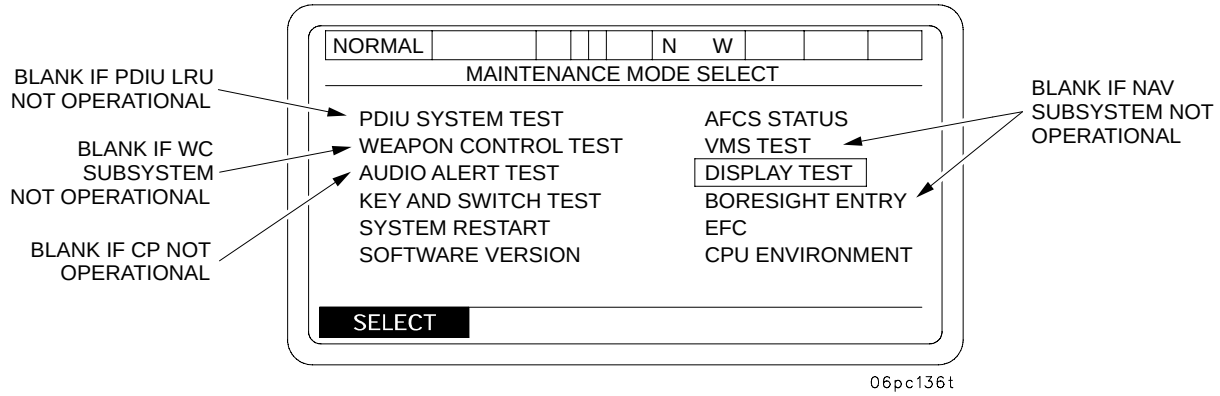


b. Your display (EL PANEL) will become highlighted for 2 seconds. After 2 seconds, your EL PANEL will return to normal. You may reselect DISPLAY TEST if required.

c. If there are some spots on your EL PANEL that did not light up, determine if this degraded mode is acceptable. If this is not acceptable, notify unit maintenance.

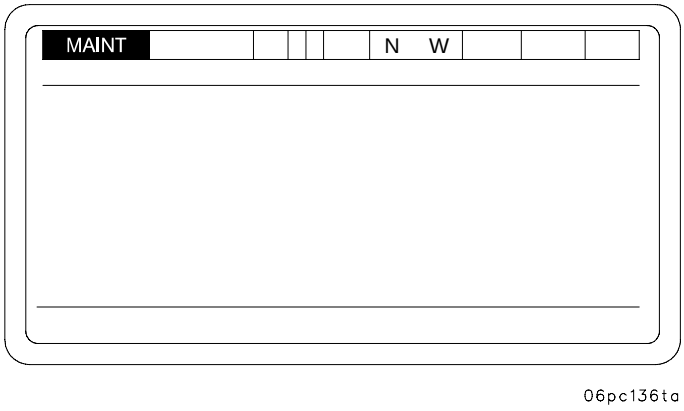

## 3-5 AFCS AND PDIU FAULT DETECTION - CONTINUED

### 3-5.8 Key and Switch Test.

**NOTE**

AFCS must be powered up at least 5 minutes prior to performing this test.

This test checks the response of each key and toggle switch on the display panel. The key marked T is for the embedded trainer switch and the key marked S is the GUN SERVO switch. Ensure that NOTES are observed when conducting this test.

This test should be performed under the standard vehicle setup condition (para 3-5.3).

This test will be used, when directed by troubleshooting procedures, or if malfunctions of keypad and switches are apparent.

Select KEY AND SWITCH TEST from MAINTENANCE MODE SELECT menu. Press SELECT key.

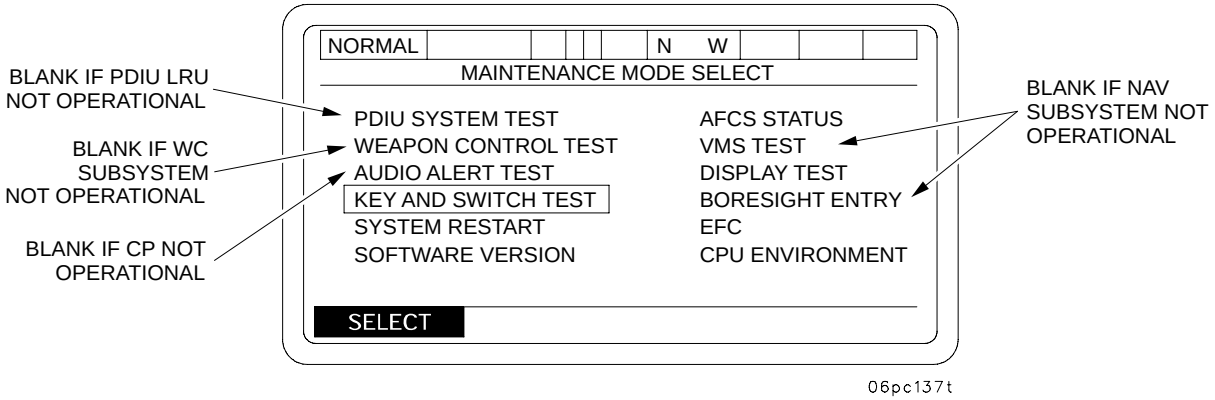


**NOTE**

- Test ends when F1 (soft key) is depressed. Make sure you depress F1 soft key last while performing this test.
- Do not place DU POWER switch to OFF during this test.

a. Depress each key in turn (including arrow keys, soft keys, LOAD, LAY, and STOW keys) and place both switches shown to ON/OFF for testing. As each key is depressed, it will be highlighted.

b. As each switch/toggle is moved, it will move up or down on your EL PANEL.

c. If fault is indicated with your keypad, switches, soft keys, arrow keys, LOAD, LAY, or STOW keys, notify unit maintenance.

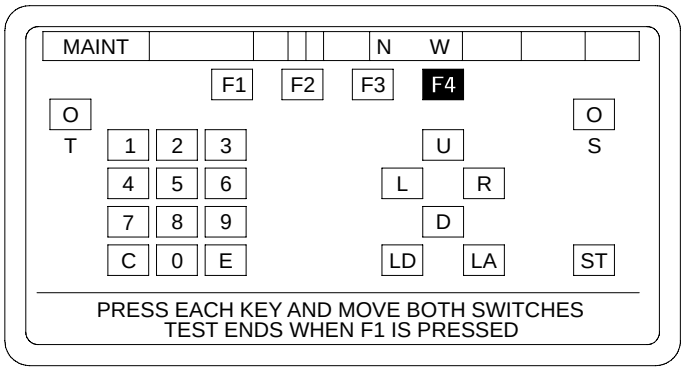

## 3-5 AFCS AND PDIU FAULT DETECTION - CONTINUED

### 3-5.9 Boresight Angle Entry.

This test is designed for use by unit maintenance personnel only. Operators must not use this selection.

**WARNING**

This selection will be used by unit maintenance personnel to input correction to NAV SUBSYSTEM boresight. Entry of improper data into boresight angle entry menu can cause gun to be laid incorrectly. This could result in injury or death to personnel down range.

**NOTE**

If you accidently enter this mode, you must exit immediately by pressing the CANCEL key.

### 3-5.10 Equivalent Full Charge (EFC).

Two sets of EFC data is maintained by the AFCS; a cumulative set which contains the total number of rounds fired by the gun using legal charge and the accumulated EFC based on the total number of rounds fired; and an intermediate set which contains the number of rounds fired for each legal charge based on the number of rounds fired since the last update of the cumulative set. The AFCS saves both data sets in the non-volatile memory during normal AFCS power down sequencing.

The calculation of EFC is done automatically to the intermediate set for POC/BCS directed fire missions when the operator presses the soft key under the VERIFIED prompt on the VERIFY EXPENDED AMMO menu. However, should the operator not be able to VERIFY that the specified ammunition has been fired, or fire missions have been fired with data supplied by voice radios, or direct fire missions have occurred, then the operator will be required to update the AFCS Ammunition Inventory and the EFC.

To update the EFC, access the SETUP AND INFORMATION Menu place cursor on MAINTENANCE and press soft key under SELECT prompt. The MAINTENANCE MODE SELECT menu will appear. Place cursor on EFC and press soft key under SELECT prompt, the EQUIVALENT FULL CHARGE menu will be displayed. On this screen the Intermediate round count is the number of rounds since the last time that the COS verified from his DA 4513 and pressed the “UP DATE EFC” soft function key. This display allows the operator to view the following features of a propellant charge combination: EFC Factors, Cumulative EFC, Intermediate Rounds, and Cumulative Rounds. In addition, the Total Rounds and the Cumulative EFC for all propellant charge combination is displayed.

**NOTE**

The operator may only alter the intermediate and cumulative rounds for a given propellant charge combination. When this information is updated, it indirectly updates the remaining information.

## 3-5 AFCS AND PDIU FAULT DETECTION - CONTINUED

### 3-5.10 Equivalent Full Charge (EFC) - Continued

To update the EFC for a propellant charge combination, place cursor in RNDS column and move to the line which the propellant charge combination is on, press soft key under SELECT prompt. An update EFC rounds menu will be displayed with EFC data for the selected combination shown on line 5 of the display. Type number of rounds fired and press ENT key. The EFC menu will be displayed with number of rounds entered from previous step in the RNDS column. When the soft key under UPDATE EFC prompt is pressed, the TOTAL RNDS column will be updated with the addition, and RNDS column will become zero.

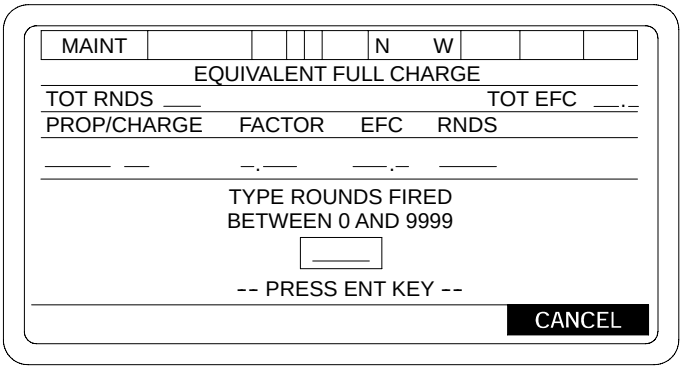


06pc426m

To return to the SETUP AND INFORMATION menu, press soft key under CANCEL prompt, the MAINTENANCE MODE SELECT menu will be displayed, press the soft key under CANCEL prompt, the SETUP AND INFORMATION menu will be displayed.

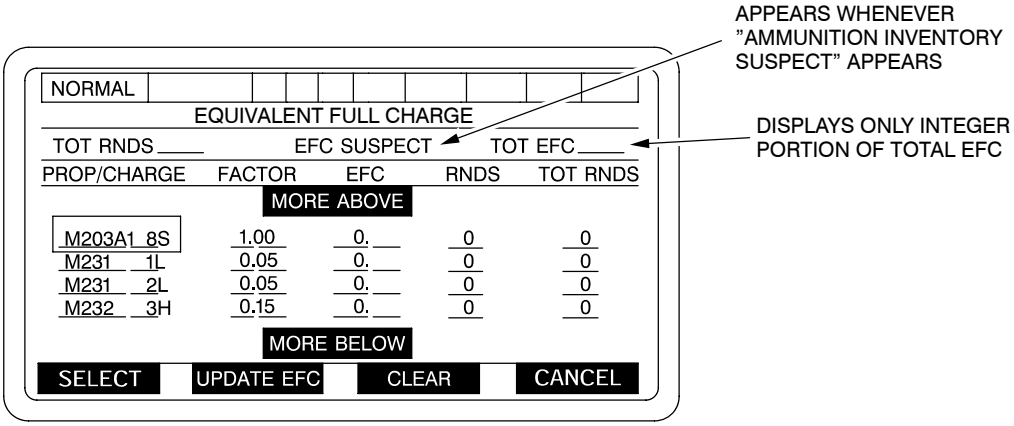


06pc138ta

**NOTE**

When RNDS or TOT RNDS is boxed and the CLEAR key is pressed, an "ARE YOU SURE?, YES, NO" PROMPT shall be presented to the operator. Legal values for all fields are given on the next page.

## 3-5 AFCS AND PDIU FAULT DETECTION - CONTINUED

### 3-5.10 Equivalent Full Charge (EFC) - Continued

**DELETED**

## 3-5 AFCS AND PDIU FAULT DETECTION - CONTINUED

### 3-5.11 AFCS and PDIU Abbreviations.

| ABBREVIATION | NAME |
|---|---|
| ACU | AFCS COMPUTER UNIT |
| AFCS | AUTOMATIC FIRE CONTROL SYSTEM |
| AOF | AZIMUTH OF FIRE |
| AZ | AZIMUTH |
| AUXA | EXTERNAL BATTERY-A |
| AUXB | EXTERNAL BATTERY-B |
| AZ/EL TACHS | AZIMUTH AND ELEVATION TACHOMETERS |
| AZTACH | AZIMUTH TACHOMETER |
| BATT | BATTERY |
| BB2 | BRUSH BLOCK #2 |
| BB6 | BRUSH BLOCK #6 |
| BB7 | BRUSH BLOCK #7 |
| BCS | BATTERY COMPUTER SYSTEM |
| BC | BALLISTIC COMPUTATION |
| BIT | BUILT IN TEST |
| BPSL | BYPASS SOLENOID |
| BPV | BYPASS VALVE |
| CBLS | CABLES |
| CDP | CONDITION DIPOLE |
| CHKFIRE | CHECK FIRE |
| CFN | COOLING FAN |
| CLCS | CLUTCH SOLENOID |
| CLV | CLUTCH VALVE |
| COMMO | COMMUNICATION |
| COS | CHIEF OF SECTION |
| COSCH | CHIEF OF SECTION CONTROL HANDLE |
| COSCH VLF | CHIEF OF SECTION CONTROL HANDLE VELOCITY FUSE |
| CP | COMMUNICATIONS PROCESSING |
| CPCI | COMPUTER PROGRAM CONFIGURATION ITEM |
| CRSH | CURRENT SHUNT |
| CTRL | CONTROL |
| CTSW | COOLING TEMPERATURE SWITCH |
| DAGR | DEFENSE ADVANCED GPS RECEIVER |
| DU | DISPLAY UNIT |
| DRU | DYNAMIC REFERENCE UNIT |
| EL | ELEVATION |
| ELHP | ELEVATION HANDPUMP |
| ELSL | ELEVATION SELECT SOLENOID |
| ELSV | ELEVATION SERVO VALVE |

# 3-5 AFCS AND PDIU FAULT DETECTION - CONTINUED

## 3-5.11 AFCS and PDIU Abbreviations - Continued

| ABBREVIATION | NAME |
|---|---|
| ELTACH | ELEVATION TACHOMETER |
| ELTRUN | ELEVATION TRUNNION |
| ELV | ELEVATION SELECT VALVE |
| EQ | EQUILIBRATION |
| EQA | EQUILIBRATION ASSEMBLY |
| EQACC | EQUILIBRATION ACCUMULATOR |
| EQHP | EQUILIBRATOR HANDPUMP |
| EQMANIFOLD | EQUILIBRATION MANIFOLD |
| EQ CHARGE VALVE | EQUILIBRATOR CHARGE VALVE |
| FIL | FILTER |
| FILA | FILTER ASSEMBLY |
| FIREMSN | FIRE MISSION |
| FLOM | FLOWMETER |
| FLU | FLUID |
| FLUSN | FLUID LEVEL SENSOR |
| GCH | GUNNER'S CONTROL HANDLE |
| GNR | GUNNER |
| GPS | GLOBAL POSITIONING SYSTEM |
| HCB | HYDRAULIC CONTROL BOX |
| HPUMP | HANDPUMP |
| HYD | HYDRAULIC |
| HYM | HYDRAULIC PUMP ELECTRIC MOTOR |
| HYP | HYDRAULIC PUMP |
| HYPR | HYDRAULIC POWER RELAY |
| MO | MOVE ORDER |
| MSL | MODE SELECT SOLENOID |
| MSV | MODE SELECT VALVE |
| MVS | MUZZLE VELOCITY SENSOR |
| NAV | NAVIGATION |
| NA | NAV ASSIST |
| NRZ | NON-RETURN TO ZERO |
| OLSN | OVERLOAD SENSOR |
| PCU | POWER CONDITIONER UNIT |
| PDIU | PROGNOSTIC DIAGNOSTIC INTERFACE UNIT |
| PLGR | PRECISION LIGHTWEIGHT GPS RECEIVER |
| PRESS | PRESSURE |
| PWR | POWER |

## 3-5 AFCS AND PDIU FAULT DETECTION - CONTINUED

### 3-5.11 AFCS and PDIU Abbreviations - Continued

| ABBREVIATION | NAME |
|---|---|
| PXDCR | PRESSURE TRANSDUCER |
| REFIL | RETURN FILTER |
| RR | RADIO RACK |
| SFIL | SUPPLY FILTER |
| SH | SHUNT |
| SL | SOLENOID |
| SN | SENSOR |
| SR | SLIP RING |
| SV | SERVO |
| SW | SWITCH |
| SYS | SYSTEM |
| TEMP | TEMPERATURE |
| TF XXI | TASK FORCE TWENTY-ONE |
| TRAV | TRAVERSE |
| TRAV GEAR | TRAVERSING GEAR |
| TRDM | TRAVERSE DRIVE MECHANISM |
| TRLSL | TRAVERSE LIMIT SOLENOID |
| TRLSW | TRAVERSE LIMIT SWITCH |
| TRLV | TRAVERSE LIMIT VALVE |
| TRSL | TRAVERSE SELECT SOLENOID |
| TRSV | TRAVERSE SERVO VALVE |
| TRV | TRAVERSE SELECT VALVE |
| TSN | TEMPERATURE SENSOR |
| TTCBL | TUBE TEMPERATURE SENSOR GFE CABLE |
| TTTSN | TUBE TEMPERATURE SENSOR |
| TXDCR | TEMPERATURE TRANSDUCER |
| VMS | VEHICLE MOTION SENSOR |
| VMSC | VEHICLE MOTION SENSOR MODEM-CAB |
| VMSH | VEHICLE MOTION SENSOR MODEM-HULL |
| VLF | VELOCITY FUSES |
| WC | WEAPONS CONTROLLER |
| WPN | WEAPON |
| WTSL | WARMUP TEMPERATURE SOLENOID |
| WTSW | WARMUP TEMPERATURE SWITCH |
| WTV | WARMUP TEMPERATURE VALVE |

## 3-5 AFCS AND PDIU FAULT DETECTION - CONTINUED

### 3-5.12 Software Version/Configuration Display

To view detailed software configuration information for each Computer Program Configuration Item (CPCI) move cursor to “SOFTWARE VERSION” on the Maintenance Mode SELECT MENU.

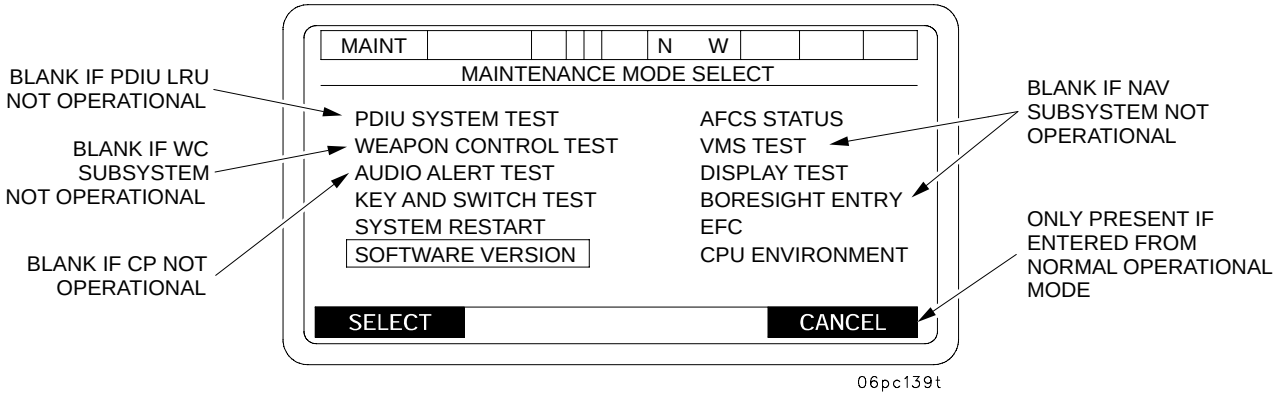


Press soft key label “SELECT” and the SOFTWARE VERSION/CONFIGURATION DISPLAY as shown below will appear.

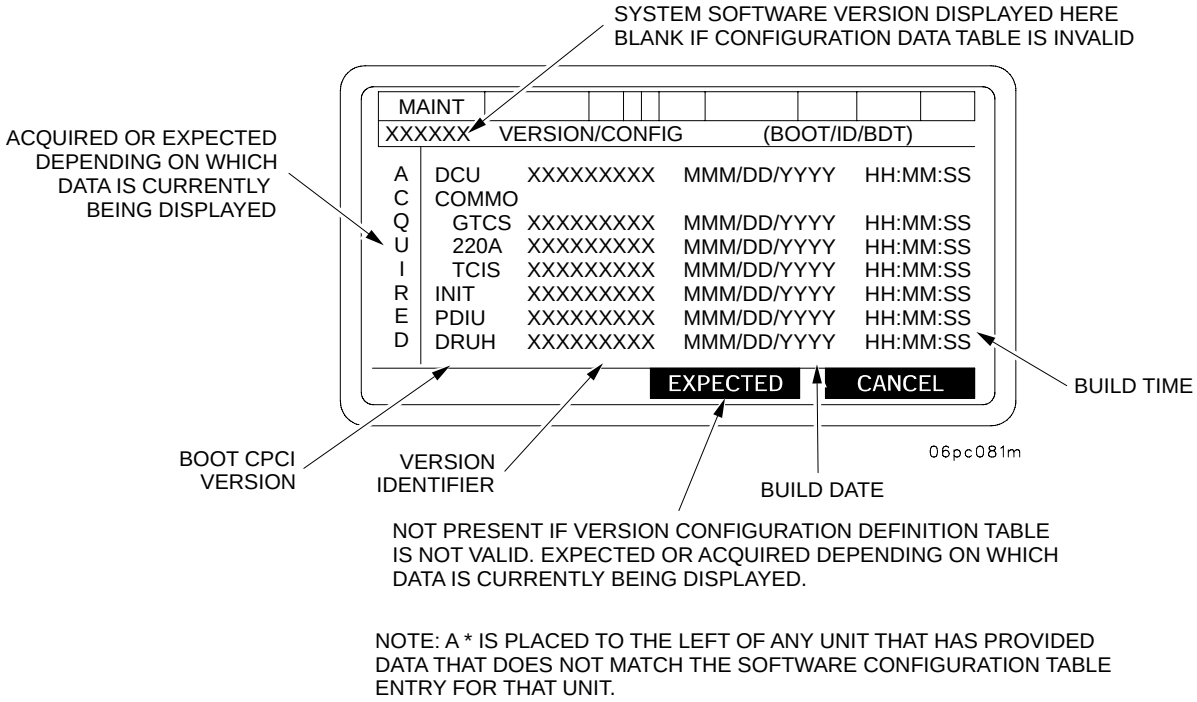


NOTE: A * IS PLACED TO THE LEFT OF ANY UNIT THAT HAS PROVIDED DATA THAT DOES NOT MATCH THE SOFTWARE CONFIGURATION TABLE ENTRY FOR THAT UNIT.

### NOTE

- An asterisk (*) is placed to the left of any unit that has provided data that does not match the expected software configuration table entry for that unit. (See PDIU in the previous figure.)
- Information displayed from the DRUH can be interpreted as version configuration data.

## 3-5 AFCS AND PDIU FAULT DETECTION - CONTINUED

### 3-5.12 Software Version/Configuration Display - Continued

**NOTE**

- When a LRU/CPCI other than the DCU is reported with an indirect configuration, then the system will run in a degraded mode and will declare the LRU/CPCI as unavailable.
- Initially, the ACQUIRED information of the display will give the boot loader, system software version and build data for each computer program configuration item that is acceptable to the system software configuration.
- If the CPCI is not acceptable, there will be an asterisk (*) to the left of the CPCI. If the asterisk is present, this will cause the system to operate in the DEGRADED mode unless the asterisk appears next to DCU, then the system will only operate in the Maintenance mode.
- To check which version of software is acceptable, press softkey under EXPECTED.
- If a CPCI is blank, the version of software loaded is acceptable with any system configuration.
- If uploading of software is required, notify Unit Maintenance.

### 3-5.13 CPU Environment Display.

This display allows the operator to view System related parameters as follows:

Inputs:

1. Operating System Version (O/S)
2. BIOS Information (Vendor & Version)
3. Elapsed Time Meter (in hours)

The tactical software receives the data listed above from the ACU and presents this information to the operator on the DU. This information is used by maintenance personnel.

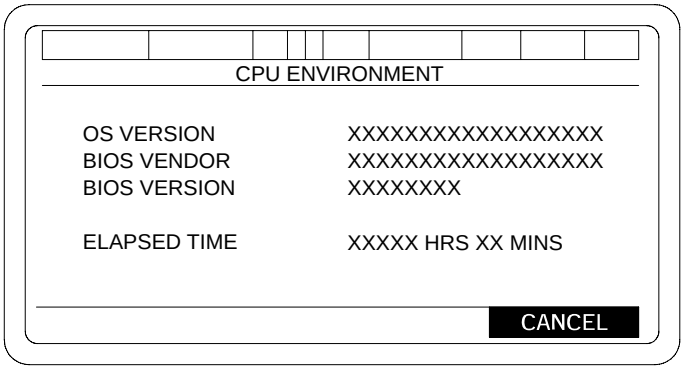


06pc428m

# 3-5A PDFCS AND PDI FAULT DETECTION.

## 3-5A.1 Power Up Built-In-Test (BIT).

The BIT is a self-test of the PDFCS. This test occurs when the vehicle MASTER power is ON and the PDFCS POWER switch (located on the PDU), is placed to ON. By placing the PDFCS POWER switch and PCU-2 circuit breakers to ON, the PDU will display the screen shown.

As each of the seven subsystems is tested, the - will change and provide a subsystem condition. An OK condition (see illustration below), indicates a subsystem is 100% functional.

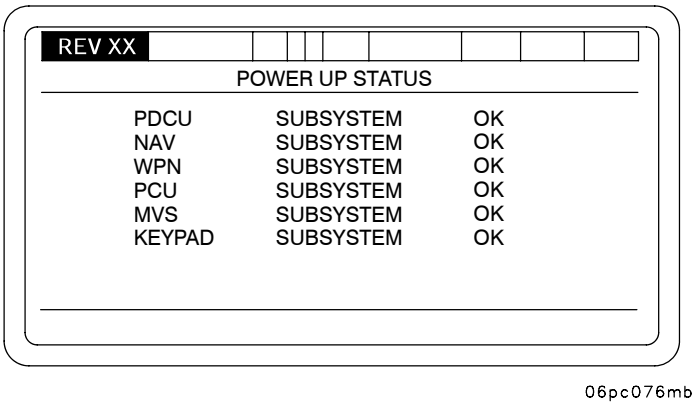


**NOTE**

If PDU contains an incorrect configuration, the PDFCS will not allow the operator to select normal operations until a correct PDU software configuration is downloaded.

When configuration verification checking indicates that the executed software configuration is not the same as the acquired software configuration, a short error message "INVALID SOFTWARE CONFIGURATION", "ACK" will appear on the sofkey label line of the PDU.

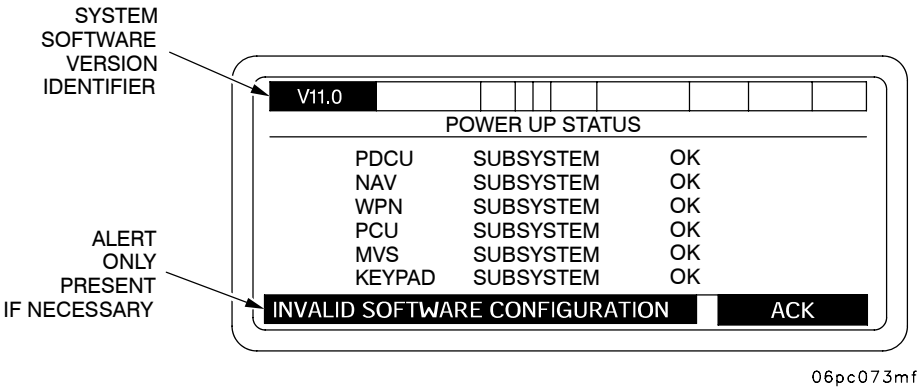


When the message is acknowledged, the PDFCS will proceed to the "SELECT OPERATIONAL MODE" menu. To view detailed software configuration information for each LRU, MAINTENANCE should be selected, IAW procedure in para 3-5A.2.

# 3-5A PDFCS AND PDI FAULT DETECTION - CONTINUED

## 3-5A.1 Power Up Built-In-Test (BIT) - Continued

The display shown in the example below illustrates two conditions, DEGRADED and OUT.

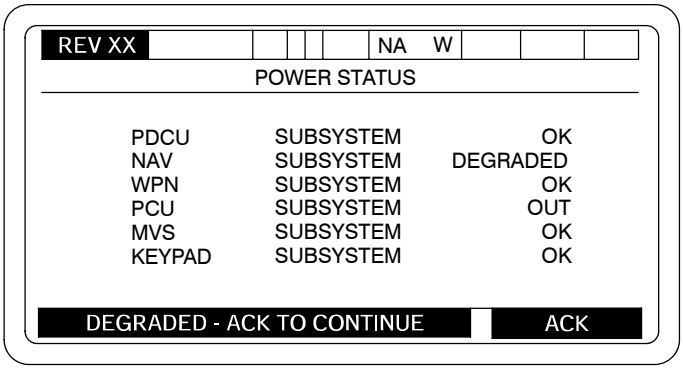


06pc077mc

The DEGRADED condition indicates a subsystem is not 100% functional. When a degraded condition exists, it will be indicated in field 7 by one or a combination of these letters with the following meaning:

N - Navigation
A - GPS Aiding
C - Communication Processing
W - Weapon Controller

# 3-5A PDFCS AND PDI FAULT DETECTION - CONTINUED

## 3-5A.1 Power Up Built-In-Test (BIT) - Continued

These two conditions, OUT and DGRD, will be tested to determine where the fault exists and the extent of the fault. After a fault has been detected (OUT or DGRD condition during self-test) press the illuminated soft key beneath the word ACK. After pressing the ACK key, the screen shown below will be displayed.

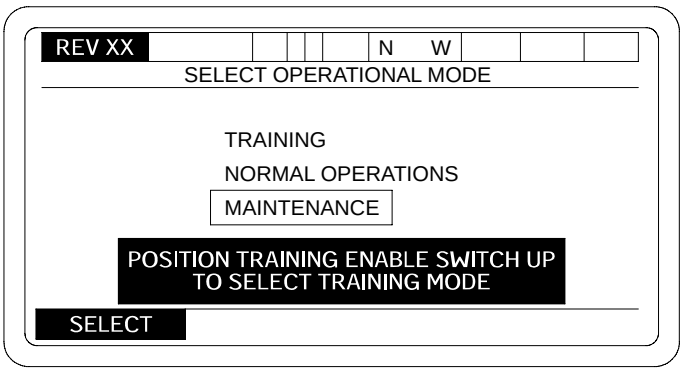


hipc4198

The display above depicts three modes: TRAINING, NORMAL OPERATION and MAINTENANCE. To select MAINTENANCE MODE, box in MAINTENANCE as shown in the illustration above. Press illuminated soft key beneath the word SELECT to enter maintenance mode master menu.

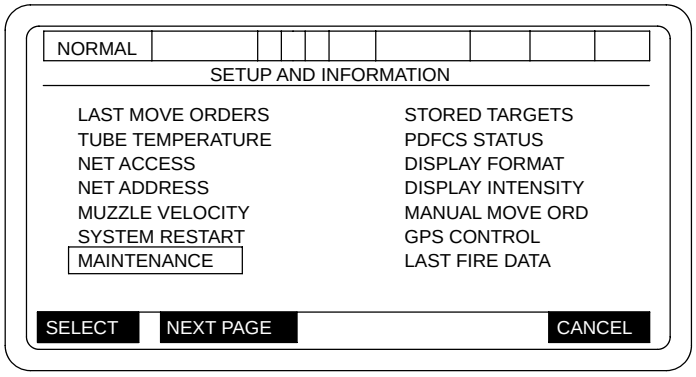


06pc213mc

The PDFCS also provides the capability for the PDFCS operator to transition from Normal Operational Mode functions to Maintenance Mode functions and back to Normal Operational Mode without having to perform a power down sequence, system restart, or Normal Operational Mode initialization procedures. This capability shall only be available when the PDFCS has successfully completed a Normal Operational Mode initialization. Selection of the Maintenance Mode from the PDFCS Mode Selection display shall not allow the PDFCS operator to transition to Normal Operational Mode without first performing either a power down sequence or a system restart.

When Maintenance Mode functions are selected from the PDFCS Operational Mode, the PDI shall be directed to limit intrusive testing to only those tests which will not impact the ability of the PDFCS to quickly respond to fire mission requests. When Maintenance Mode is entered from the PDFCS Mode Selection display, the PDI shall be allowed to perform its full range of intrusive tests.

# 3-5A PDFCS AND PDI FAULT DETECTION - CONTINUED

## 3-5A.1 Power Up Built-In-Test (BIT) - Continued

If a fire mission is received while the PDFCS is in a Maintenance Mode function which was activated from the Operational Mode, the operator shall be prompted to either accept or reject the mission. Operator acceptance of the mission shall automatically terminate all Maintenance Mode function activity and transition to Normal Operational Mode fire mission processing. Operator rejection of the mission shall cause an operator abort of the fire mission and shall cause the PDFCS to remain in the currently active Maintenance Mode function.

## 3-5A.2 PDFCS Status.

To display the PDFCS STATUS menu:

a. Select MAINTENANCE from the SETUP AND INFORMATION menu. Press SELECT key. This will cause the MAINTENANCE MODE SELECT menu to be displayed.

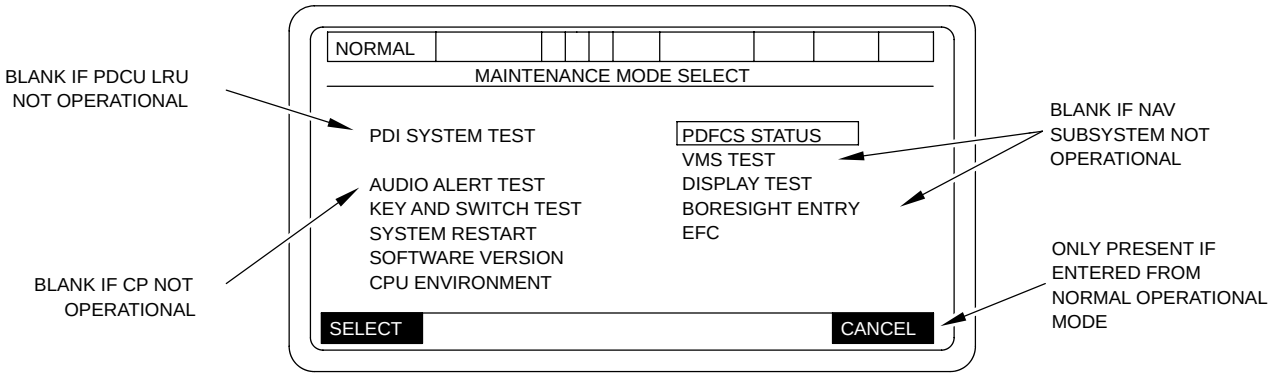


06pc122ta

If MAINTENANCE is selected from NORMAL OPERATIONAL MODE, the MAINTENANCE screen will display “SELECT” and “CANCEL” options above soft keys 1 and 4 in field 16.

b. Select PDFCS STATUS from the MAINTENANCE MODE SELECT menu. Press SELECT key. This will cause the PDFCS STATUS menu to be displayed.

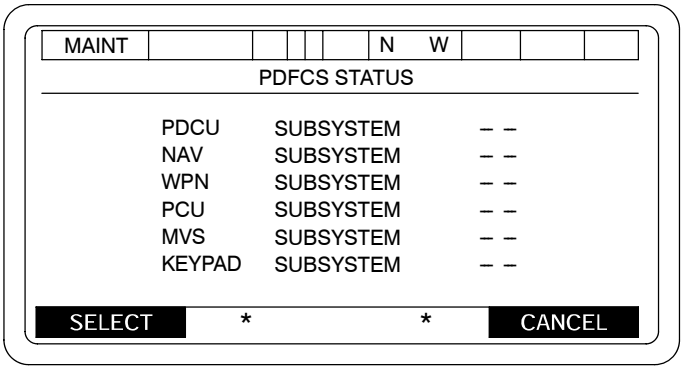


06pc640m

The PDFCS STATUS menu will display the various subsystem faults. Using this fault list (showing Degraded Mode of each subsystem), you will be able to determine if Degraded Mode is acceptable depending on mission requirements.

# 3-5A PDFCS AND PDI FAULT DETECTION - CONTINUED

## 3-5A.2 PDFCS Status - Continued

Certain degraded subsystems will not interfere with PDFCS operation or mission capability. It is important to know, however, which subsystem is degraded (and which BIT item has failed). Knowing which failure to compensate for/correct will allow you to carry on with your mission. The various LRUs communicate/send messages periodically within PDFCS. Whenever an LRU has not sent a message within a certain amount of time, the LRU timer sends an LRU FAILED message. In the event you get an LRU FAILED message, go into MAINTENANCE menu, check PDFCS STATUS. If LRU failed, notify unit maintenance.

The PDFCS STATUS menu is used by unit maintenance personnel, as well as by the operator. The operator must notify unit maintenance of any subsystem listed with a status of DEGRADED or OUT, then no faults within that subsystem are indicated. Look at each subsystem carefully.

Select the subsystem in question. Further information will be displayed to help determine where the fault lies.

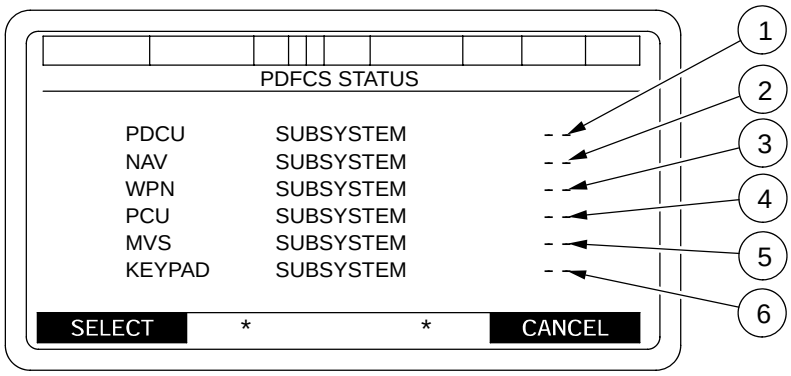


1 = (OK, DEGRADED, OUT)

2 = (OK, DEGRADED, OUT)

3 = (OK, DEGRADED, OUT)

4 = (OK, DEGRADED, OUT)

5 = (OK, OUT,--)Where -- indicates that the PDFCS could not connect to the MVS

6 = (OK, DEGRADED, OUT)

SELECT = SELECT A SUBSYSTEM

CANCEL = CANCEL and return to SETUP AND INFORMATION menu or INTERNAL MAINTENANCE menu

* = No test appears for these softkeys. Pressing FUNCTION KEY 2 or 3 will clear ET SIMULATED FAILURES

06pc641m

# 3-5A PDFCS AND PDI FAULT DETECTION - CONTINUED

## 3-5A.2 PDFCS Status - Continued

3-5A.2.1 PDCU SUBSYSTEM STATUS DISPLAY.

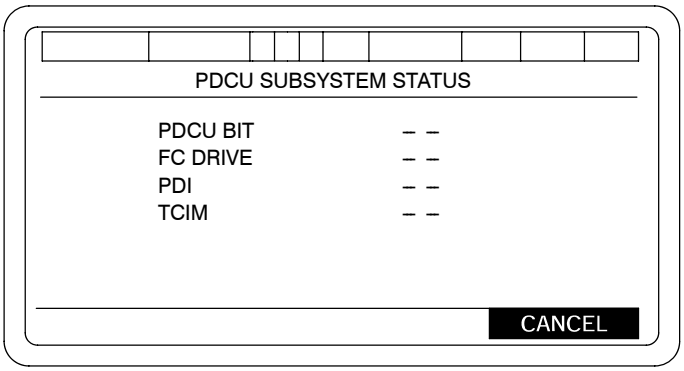


– – = (OK, FAIL)

CANCEL = Return to the PDFCS STATUS display

06pc642m

3-5A.2.2 NAV SUBSYSTEM STATUS DISPLAY.

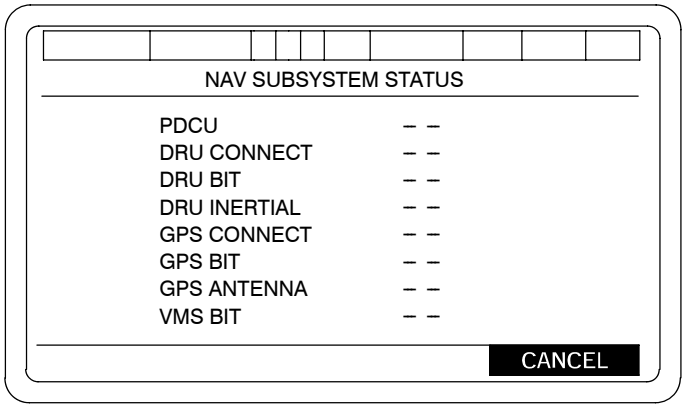


– – = (OK, FAIL)

CANCEL = Return to the PDFCS STATUS display

06pc643m

# 3-5A PDFCS AND PDI FAULT DETECTION - CONTINUED

## 3-5A.2 PDFCS Status - Continued

3-5A.2.3 WPN SUBSYSTEM STATUS DISPLAY.

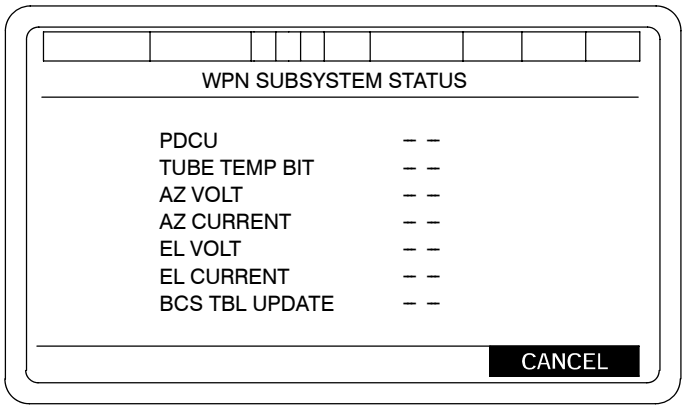


– – = (OK, FAIL)

CANCEL = Return to the PDFCS STATUS display

06pc644m

3-5A.2.4 MVS SUBSYSTEM STATUS DISPLAY.

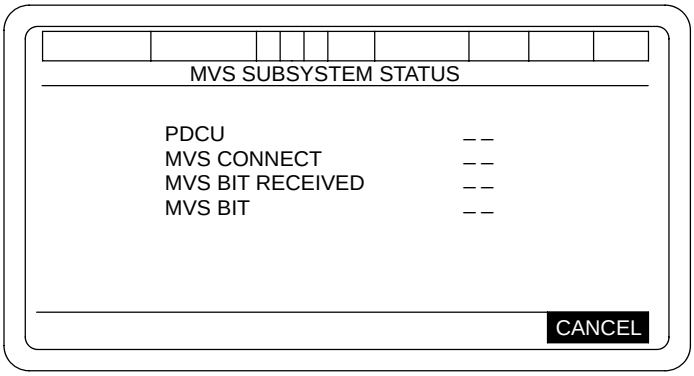


– – = (OK, FAIL)

CANCEL = Return to the PDFCS STATUS display
= Press CANCEL twice,
returns to MAINTENANCE MODE SELECT
display

06pc645m

# 3-5A PDFCS AND PDI FAULT DETECTION - CONTINUED

## 3-5A.3 PDI System Test.

Ensure NAV alignment is complete prior to performing PDI system test.

To start the PDI SYSTEM TEST, move the cursor with the arrow keys until the PDIU SYSTEM TEST is boxed, as shown below.

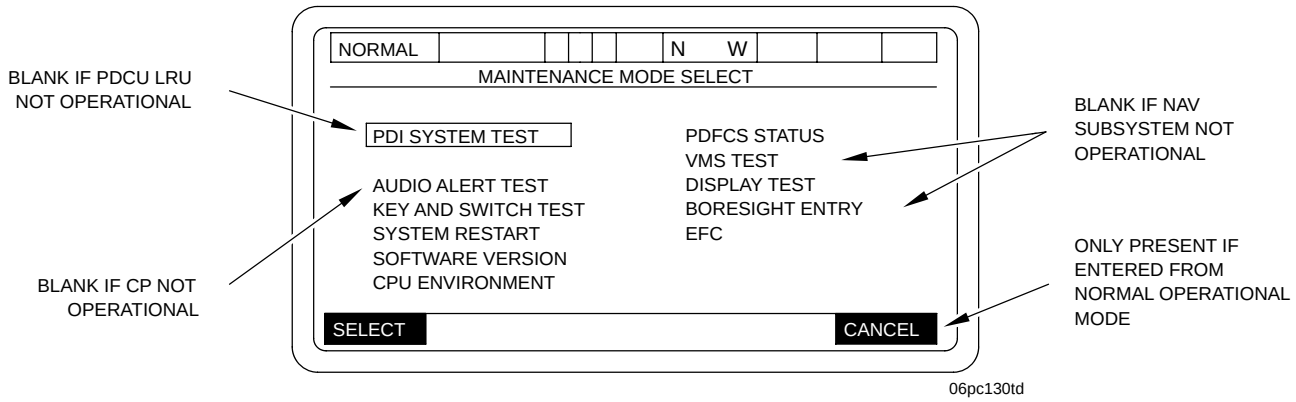


Press SELECT. The screen will display the prompt “ARE YOU SURE,” YES OR NO. Press “YES”. The screen will display the following message:

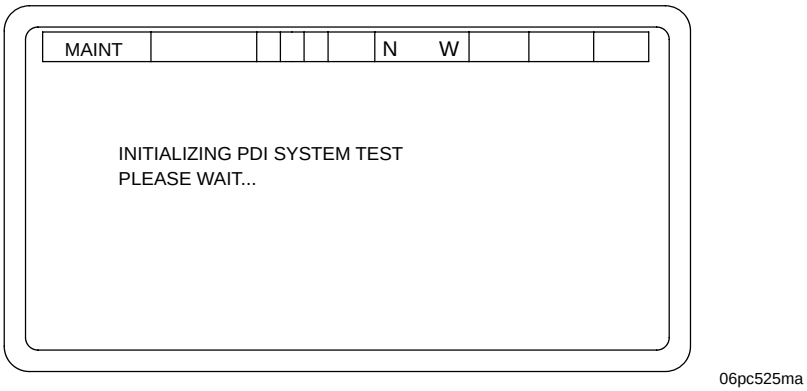


This message requires no action on your part. In 3 to 5 seconds, when the system is ready, it will be replaced with a menu display like the following:

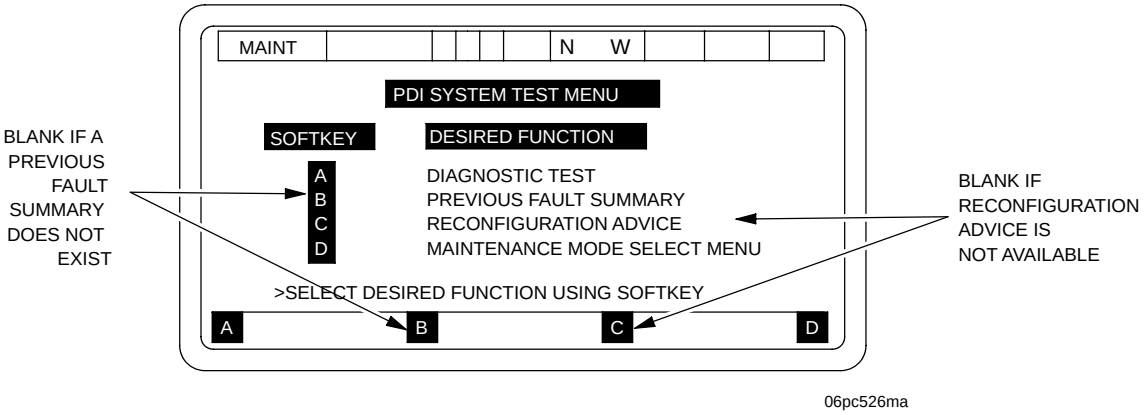


This menu allows you to select whichever function you wish to perform.

# 3-5A PDFCS AND PDI FAULT DETECTION - CONTINUED

## 3-5A.3 PDI System Test - Continued

**NOTE**

The previous Fault Summary and Reconfiguration Advice functions are not always available. These options will not be displayed if their functions cannot be performed. (The different menu screens that can be seen because of this are shown at the end of the description.)

Each of the four functions will now be described separately.

DIAGNOSTIC TEST

To perform DIAGNOSTIC TEST, press the “A” softkey.

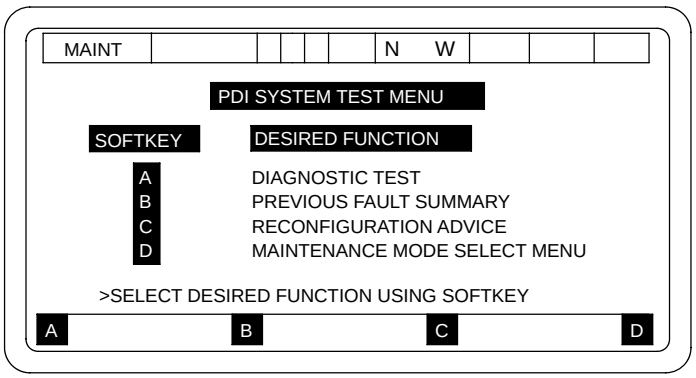


06pc527ma

The next screen allows you to select which part of the system you would like to test based upon the problem you are troubleshooting. The Gun Positioning System will not be available until the hydraulics segment has been successfully tested (the PDI should not be reset). To test the entire system, all four segments should be tested in the order they appear on the screen. As each segment passes its test, the next segment should be selected from this screen without resetting the system. If any of the segmented tests fail, the fault should be corrected, the PDFCS should be reset and the testing should begin again with the first test. Continuing testing without resetting the system can result in false failures.

To perform any of the segment tests select “YES” when that segment appears behind “CHOOSE OPTION”.

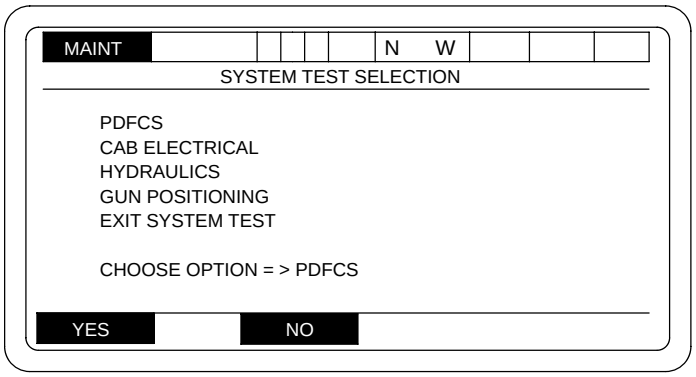


06pc377ma

# 3-5A PDFCS AND PDI FAULT DETECTION - CONTINUED

## 3-5A.3 PDI System Test - Continued

The following screen will be displayed.

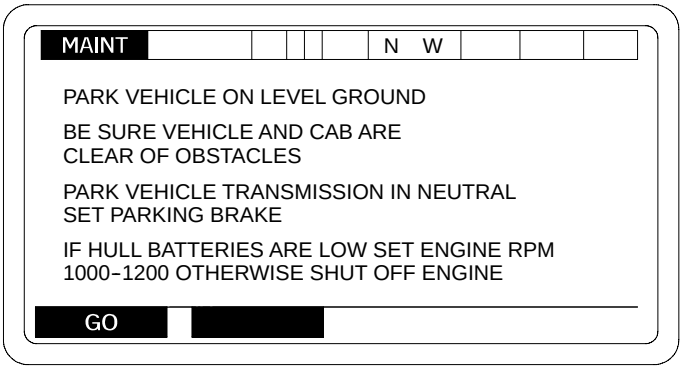


06pc378m

When you have completed the required actions, press GO softkey and testing will continue.

During the next few screens, you will be given the CANCEL softkey option. CANCEL is there in case you selected the DIAGNOSTIC TEST function (from the menu) by mistake or in case you changed your mind. When you press CANCEL, the system will display the PDI SYSTEM TEST MENU again.

Throughout diagnostic testing, you will be given instructions. When you press GO, you are telling the system that you have done the task it asked for. It is important that you complete the task before pressing GO because many of the decisions that the system makes are based on the actions that you made. A typical instruction is shown below:

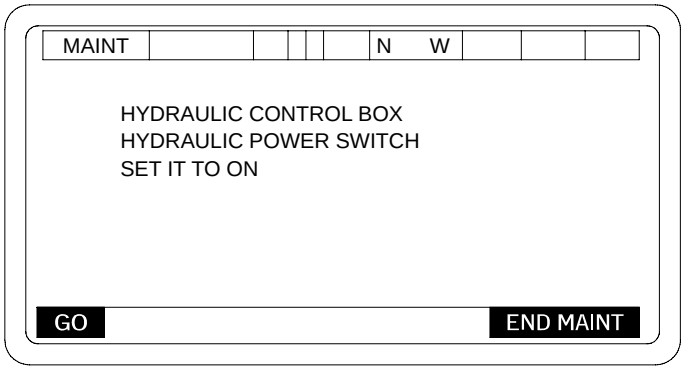


06pc411m

When you are instructed to perform an action such as the screen below, the PDI measures the voltage of the switch.

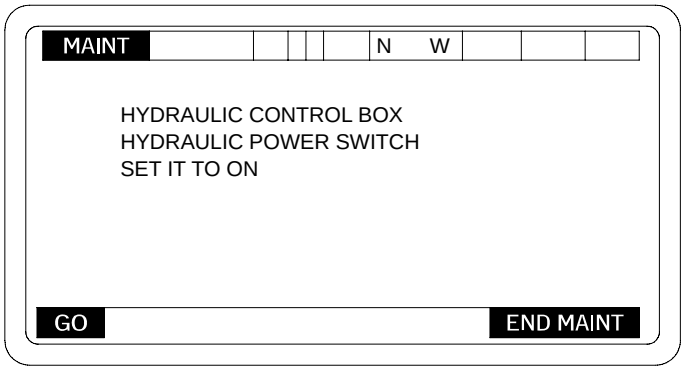


06pc408m

# 3-5A PDFCS AND PDI FAULT DETECTION - CONTINUED

## 3-5A.3 PDI System Test - Continued

If the result is not correct, then you are asked if you performed the action correctly, as shown in the screen below.

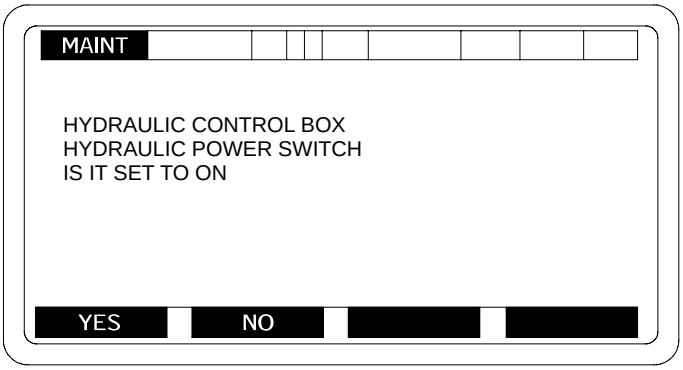


06pc409m

If you answer “YES”, a fault will be detected by the PDI. If you answer “NO”, you will be given another chance to perform the action correctly. Then, if the action is not performed correctly, a fault will be detected by the PDI.

Most of the displays in the main section of the DIAGNOSTIC TEST will include an END MAINT softkey at the bottom of the display. When this is present, you have the option of stopping the test at that point. If you press END MAINT, testing will immediately stop and you will see the Fault Summary display with all of the test results up to where you stopped. This feature is provided to allow you to return to normal operations with a minimum of delay if necessary. REMEMBER - When you press END MAINT, the system can only report the results of the test up to where you stopped. There may be further faults not detected.

During diagnostic testing, you will also be asked to answer questions. A typical question is shown below:

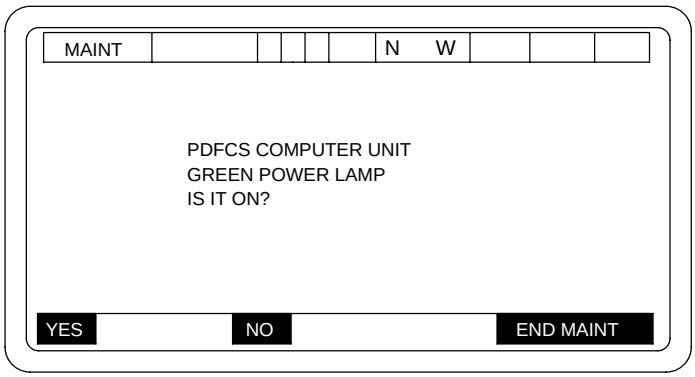


06pc407mb

Questions will always be asked so that a YES or NO answer is possible by pressing the YES or NO softkeys. The system is using your ability to see, feel and hear to get the information it needs. It uses your answers to make decisions about functions that cannot be measured directly by the PDI.

# 3-5A PDFCS AND PDI FAULT DETECTION - CONTINUED

## 3-5A.3 PDI System Test - Continued

Several times during diagnostic testing, you will see messages that start with the words “TEST IN PROGRESS” like the following screen:

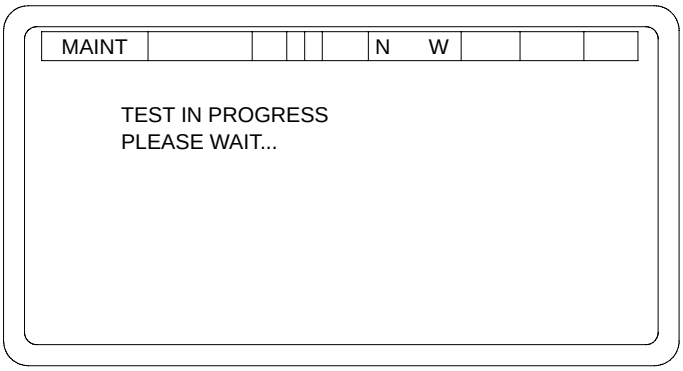


06pc59

These screens have no labels for the softkeys at the bottom of the screen and require no response. They are intended to let you know that the system has recognized your last response and is busy with a long test operation. When it is ready to continue, the display will automatically change to a question or instruction message.

If you are troubleshooting a hydraulics or weapon positioning problem or performing a full system checkout, you should press the YES softkey. The system will then begin a new sequence of instructions and questions. Most faults will be isolated as far as possible by the PDI during the normal sequence of DIAGNOSTIC TEST. Usually, the test sequence will run to completion and display the Fault Summary screen. However, some faults can be isolated further. This requires extra testing which can involve disconnecting cables and opening the hydraulic compartment. When one of these faults is detected, the system will remember it until it has finished all of the fault detection tests. It will then display a special menu screen like the following:

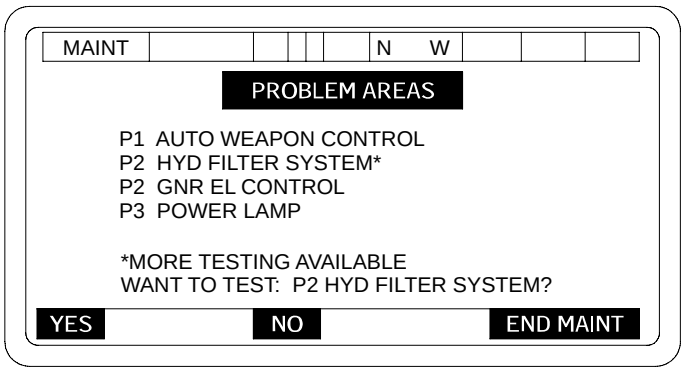


hipc4146

Each of the problem areas that requires extra testing will be displayed with an asterisk (*). The question line at the bottom will have the same name of the first extra test problem area. You can choose to continue testing this problem area by pressing YES. If you press NO, the name of the next extra test problem area will appear. As long as you continue to press NO, the names of the * problem areas will appear in the question, one at a time. If you decide not to do any of the extra testing, press END MAINT and the system will immediately display the Fault Summary.

# 3-5A PDFCS AND PDI FAULT DETECTION - CONTINUED

## 3-5A.3 PDI System Test - Continued

If you press the YES softkey for one of the problem areas, testing will continue with instructions and questions until the fault has been isolated as far as possible by the PDI. When the extra testing is complete, you will see a screen like the following:

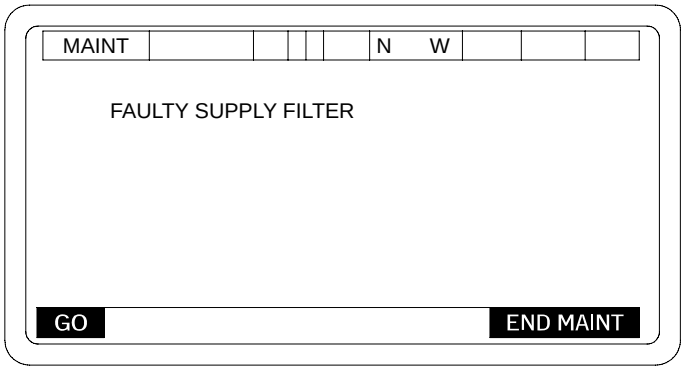


hipc4147

This screen may show one faulty LRU or a short list of possible faulty LRUs that must be isolated further by manual troubleshooting procedures. It tells you that the PDI has done all of the testing it can. When you press GO, the Fault Summary screens will begin.

The first screen of the Fault Summary sequence will be definition of the Fault Priority Codes assigned to each fault message.

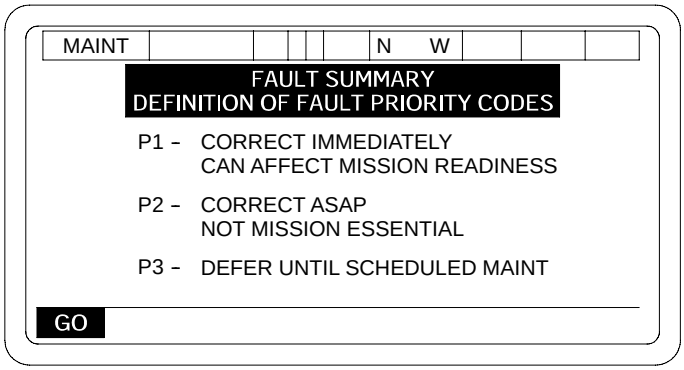


hipc4148

P1 - These faults require immediate attention. You have lost or may soon lose a major system function that may affect your mission capabilities.

P2 - These faults do not immediately affect your mission readiness but should be corrected as soon as possible.

P3 - These faults can be deferred until a scheduled maintenance period.

# 3-5A PDFCS AND PDI FAULT DETECTION - CONTINUED

## 3-5A.3 PDI System Test - Continued

The fault definition screen is followed by a Fault Summary list like the one shown on the next screen.

Press the GO softkey to continue.

```
MAINT                    N    W
PROBLEM AREAS. . . . . . . . . . . . POSSIBLE FAULTS
  P1    NAV. . . . . . . . . . . . . . . . . DRU, PCU, W27
          SEE CODE xxx IN -20 MANUAL
  P2    HYD FILTER SYSTEM . . . . . . . . . . . . SFIL
          SEE CODE xxx IN -20 MANUAL
  P2    GNR EL CONTROL . . .ELSL, ELV, HCB, W64
          SEE CODE xxx IN -20 MANUAL
  P3    POWER LAMP. . . . . . . . . . . . . . . . .VMSH
          SEE CODE xxx IN -20 MANUAL
GO
```

hipc4149

The Fault Summary screens are a list of all of the problems found during screen DIAGNOSTIC TEST. When no problems have been detected, this will simply say “NO FAULTS FOUND” and the Definition of Fault Priority Codes screen will not be shown. However, when problems have been detected, a list like the one above will appear.

When the Fault Summary displays problem areas, it also displays a list of possible faulty LRUs for each problem area and a -20 manual code number. When only one LRU is listed for a problem area, DIAGNOSTIC TEST has determined that the LRU is definitely faulty and must be replaced. When more than one LRU (separated by commas) is listed as a possible fault for a problem area, further isolation by Unit Maintenance is required to determine which one of the LRUs listed is faulty.

The code number (xxx) listed in the “SEE CODE XXX IN -20 MANUAL” message is a reference to an index in the -20 manual which lists the page where the correct manual troubleshooting procedure can be found.

**NOTE**

All of the information in the Fault Summary screens should be reported to Unit Maintenance. It is a good idea to copy the list of problems and possible faults before pressing GO. If you forget or don’t have time to copy all the information now, it can be redisplayed by selecting the Previous Fault Summary option in the PDIU SYSTEM TEST MENU screen the next time it is displayed, even if power has been removed.

# 3-5A PDFCS AND PDI FAULT DETECTION - CONTINUED

## 3-5A.3 PDI System Test - Continued

The Fault Summary list can take up to three screens. When you have finished viewing or copying the information on each Fault Summary screen, press GO to continue. If more faults were detected, the next Fault Summary screen will be displayed. Some faults may not appear due to limited space on the screens. After corrective actions have been accomplished, the test should be re-run to ensure no additional faults are detected. If Reconfiguration Advice is available for the detected faults, you will be asked the following question:

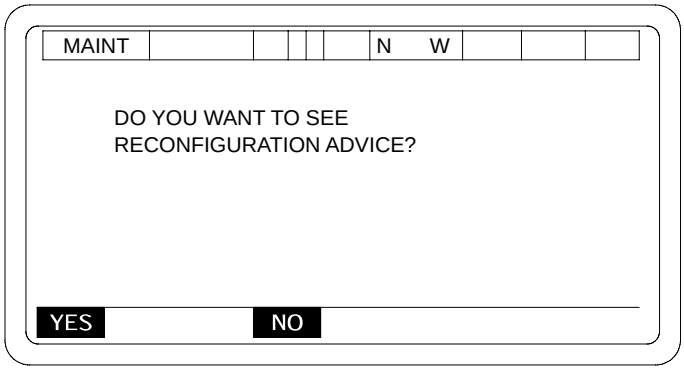


hipc4150

This screen offers you the chance to get further information on what backup modes of operation are available for subsystems that are not operational. If you press YES, a screen like the following will appear:

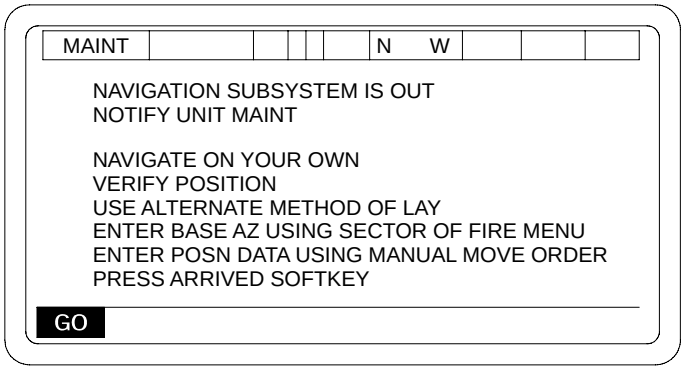


hipc4151

# 3-5A PDFCS AND PDI FAULT DETECTION - CONTINUED

## 3-5A.3 PDI System Test - Continued

Reconfiguration Advice may take more than one screen depending on which (and how many) subsystems are not operational. After you have read each screen, press the GO softkey to continue.

After all Reconfiguration Advice messages have been read, you will be given two screens of instructions that will return the vehicle to a given state. At this point, testing is complete. When you press the final GO, the screen will display the PDIU SYSTEM TEST MENU again.

General Notes About DIAGNOSTIC TEST

The sequence of messages and displays that you see during DIAGNOSTIC TEST will vary depending on the number of faults present in the vehicle. The system will choose its own path through the tests and guide you with instructions. Don't be concerned if you see messages and questions you haven't seen before. The system is simply troubleshooting a fault you haven't had before.

PREVIOUS FAULT SUMMARY

To view the PREVIOUS FAULT SUMMARY, press the B softkey.

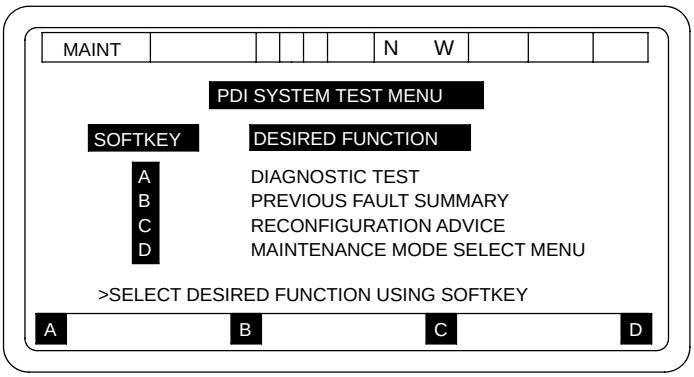


06pc527ma

The PREVIOUS FAULT SUMMARY is a list of all the problems found during the last DIAGNOSTIC TEST performed. If no problems were detected, the following message will be displayed:

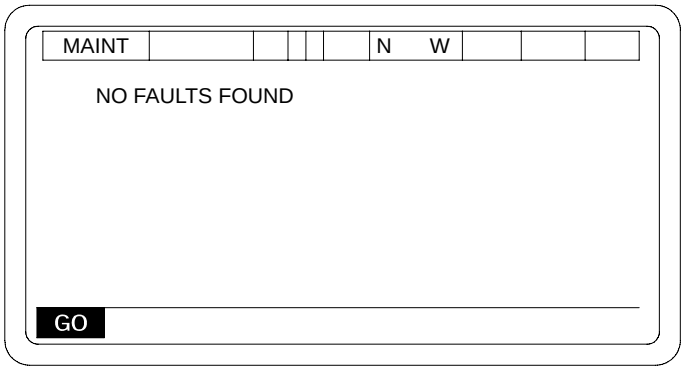


06pc4152

# 3-5A PDFCS AND PDI FAULT DETECTION - CONTINUED

## 3-5A.3 PDI System Test - Continued

If the last DIAGNOSTIC TEST was aborted before completion, you will also see the following message:

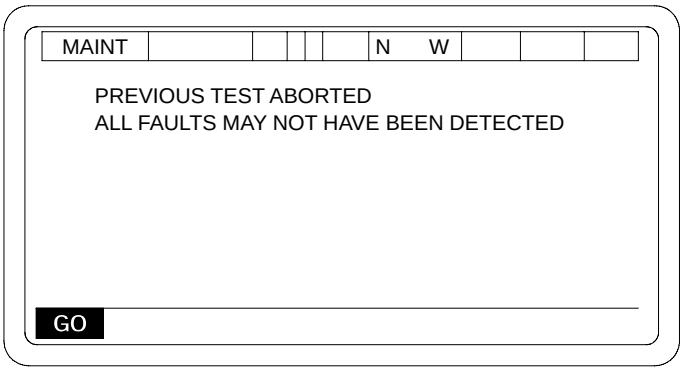


hipc4153

When all screens in the Previous Fault Summary display sequence have been viewed, the PDIU SYSTEM TEST MENU will automatically be displayed again.

RECONFIGURATION ADVICE

To view Background Monitoring Mode RECONFIGURATION ADVICE, press the C softkey.

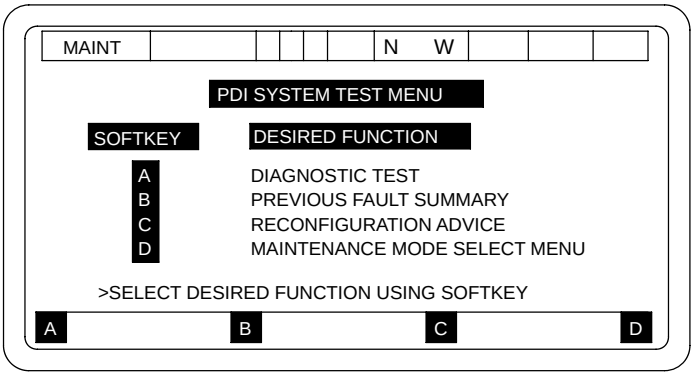


06pc527ma

A screen like the following will be displayed:

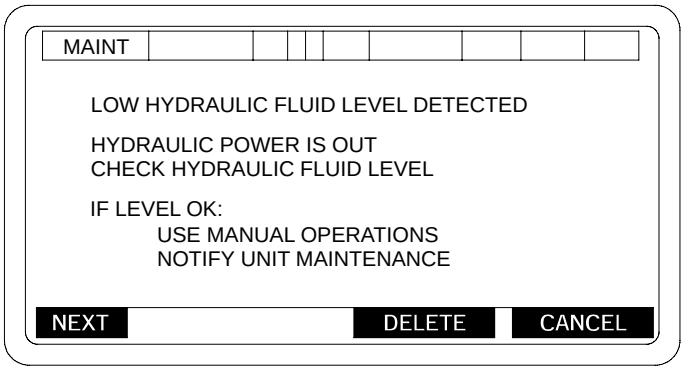


hipc4154

# 3-5A PDFCS AND PDI FAULT DETECTION - CONTINUED

## 3-5A.3 PDI System Test - Continued

RECONFIGURATION ADVICE offers you the opportunity to get more information on what Backup Modes of Operation are available for subsystems that are not operational. This information is displayed for each warning message sent to the PDCU during Normal Operations. RECONFIGURATION ADVICE can take several screens to display as each warning message/advisory information is displayed on a separate screen. You can cycle through and delete the messages as desired.

If you press NEXT, the next warning message and its advisory information will be displayed. If you press DELETE, the warning message and its advisory information displayed will be deleted and the next warning message will appear.

Throughout RECONFIGURATION ADVICE, the CANCEL softkey is available to you. If you press CANCEL, you will exit from RECONFIGURATION ADVICE and the PDI SYSTEM TEST MENU will be displayed again.

After all messages have been viewed, the following display will appear:

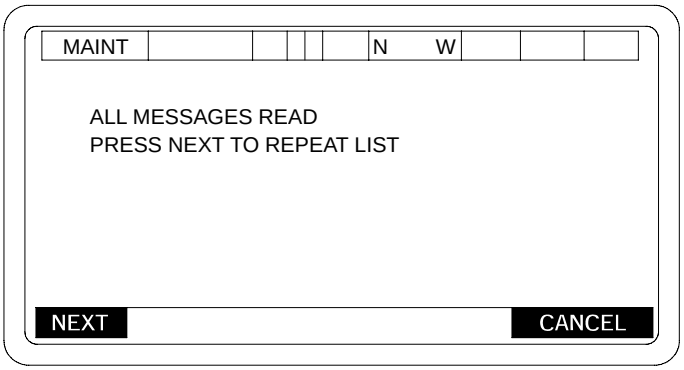


hipc4155

You can press NEXT to cycle through all the messages which were not deleted. Or press CANCEL to exit.

When the last message is displayed and there are no more messages to view, a display like the following will appear:

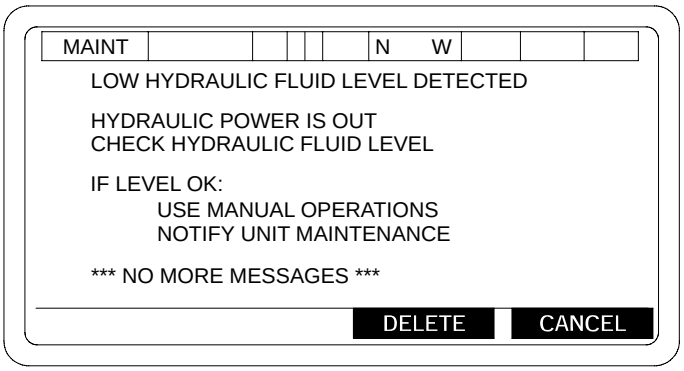


hipc4156

If you press DELETE, the warning message and its advisory information will be deleted and the PDI SYSTEM TEST MENU will be displayed again.

# 3-5A PDFCS AND PDI FAULT DETECTION - CONTINUED

## 3-5A.3 PDI System Test - Continued

MAINTENANCE MODE SELECT MENU

To exit from PDI SYSTEM TEST, press the D softkey.

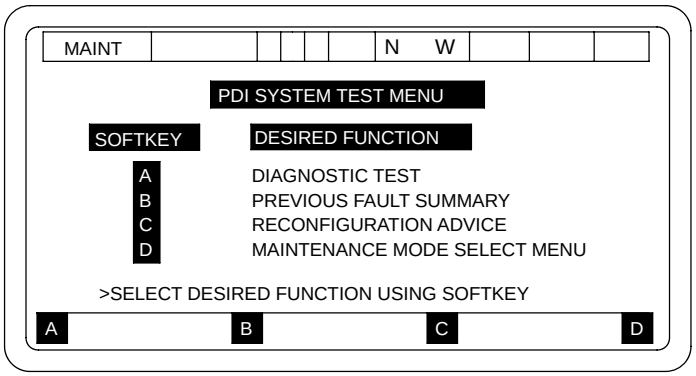


06pc527ma

Pressing D will terminate PDI SYSTEM TEST and the MAINTENANCE MODE SELECT menu screen will appear. The PDI will automatically enter into its Background Monitoring Mode.

PDI SYSTEM TEST MENU VARIATIONS

The following screens show all of the different menus that can be displayed when entering the PDI SYSTEM TEST. As mentioned above, all options are not always available. An option will not be displayed if its function cannot be performed.

In the following screen, all options are available to the user.

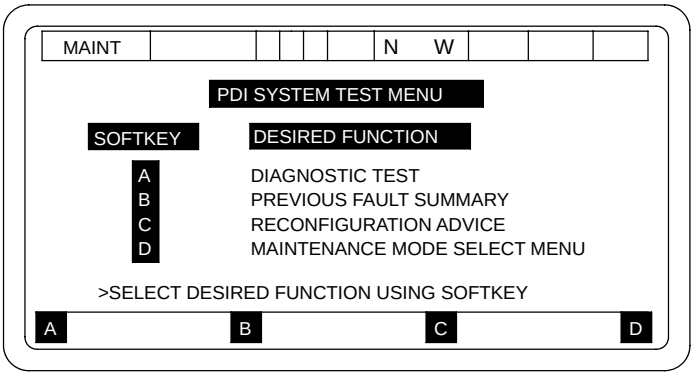


06pc527ma

# 3-5A PDFCS AND PDI FAULT DETECTION - CONTINUED

## 3-5A.3 PDI System Test - Continued

The RECONFIGURATION ADVICE option is missing from the following menu screen. RECONFIGURATION ADVICE will only be available for warning messages sent to the PDCU during Normal Operations and for certain faults detected by the PDFCS.

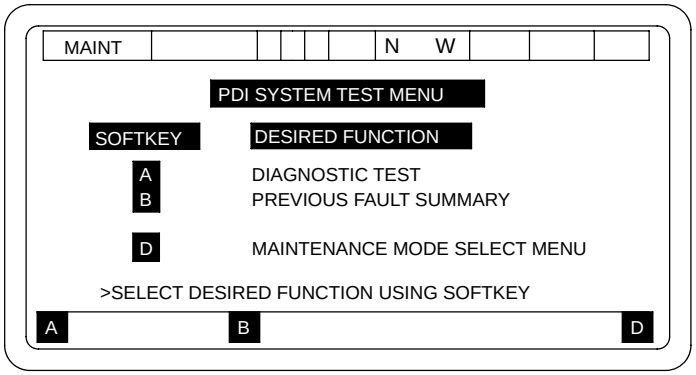


06pc542ma

The PREVIOUS FAULT SUMMARY option is missing from the following menu screen. A PREVIOUS FAULT SUMMARY will only be available if the last DIAGNOSTIC TEST performed was aborted while in progress and faults had been detected or if the last DIAGNOSTIC TEST was completed.

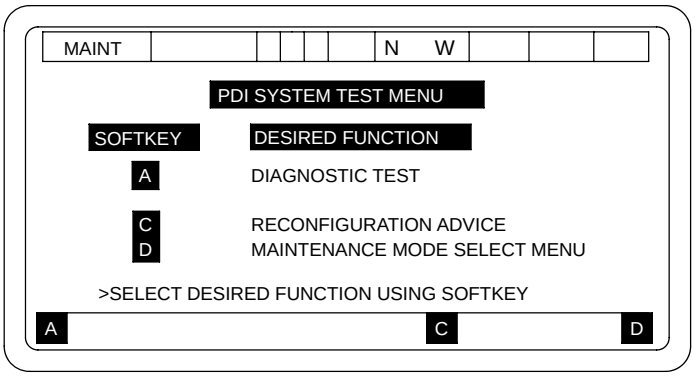


06pc543ma

# 3-5A PDFCS AND PDI FAULT DETECTION - CONTINUED

## 3-5A.3 PDI System Test - Continued

Both the PREVIOUS FAULT SUMMARY and RECONFIGURATION ADVICE options are missing from the following menu screen. Neither of these options can be performed. DIAGNOSTIC TEST and MAINTENANCE MODE SELECT MENU options will always be available.

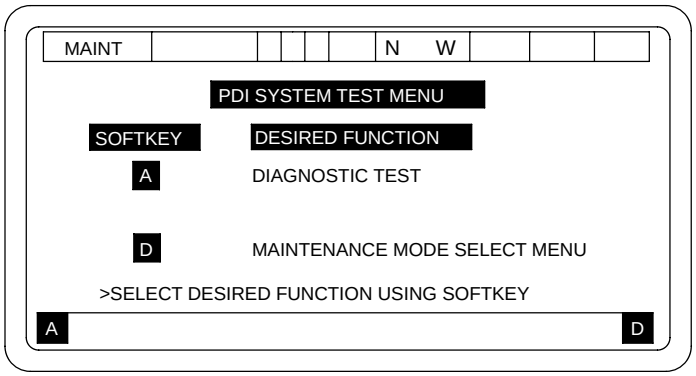


06pc546ma

DIAGNOSTIC TEST is the way you perform all diagnostic testing.

MAINTENANCE MODE SELECT MENU is the way you end PDI system testing and return to PDFCS operations.

# 3-5A PDFCS AND PDI FAULT DETECTION - CONTINUED

## 3-5A.4 Vehicle Motion Sensor Test.

This test is designed to check Vehicle Positioning System. The VMS provides signals to the PDFCS that aid in the location and positioning of vehicle (coordinates).

This test SHOULD be performed under standard vehicle setup conditions (para 3-5A.3). This test is used whenever directed by troubleshooting procedures, or when NAV DEGRADED is displayed on the PDU and you get ZUPT requests after about 4 minutes of travel.

If test results indicate that VMS is not properly functioning, notify unit maintenance personnel for corrective action.

a. Select VMS TEST from MAINTENANCE MODE SELECT menu.

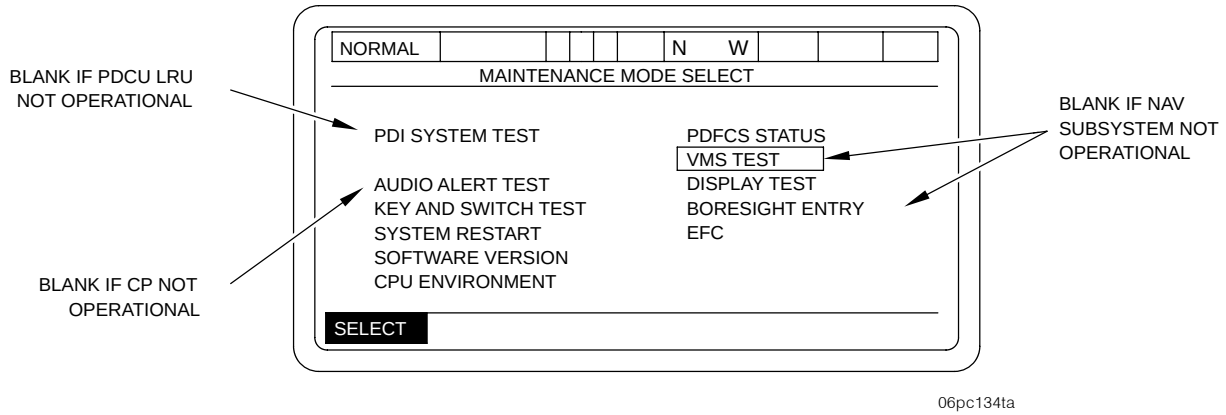

# 3-5A PDFCS AND PDI FAULT DETECTION - CONTINUED

## 3-5A.4 Vehicle Motion Sensor Test - Continued

This test is run automatically.

b. Depressing soft key under CANCEL will end test and take you back to MAINTENANCE MODE SELECT menu.

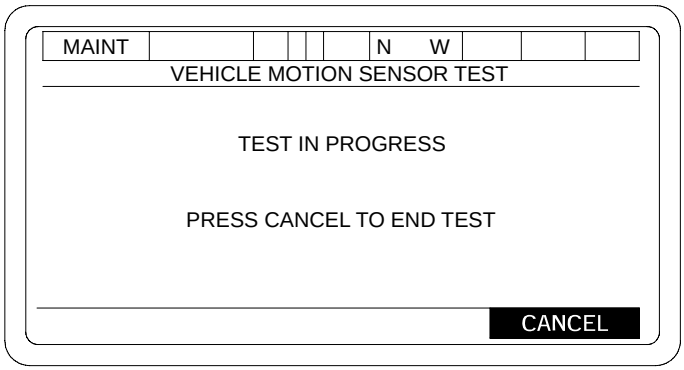


hipc4167

If test results indicate a fault, determine if this degraded mode is acceptable. If not, notify unit maintenance.

Test results can show any of the following:

RESULT -- VMS GOOD

RESULT -- VMS BAD

RESULT -- CAB SIDE VMS MODEM BAD

RESULT -- CHASSIS SIDE VMS MODEM BAD

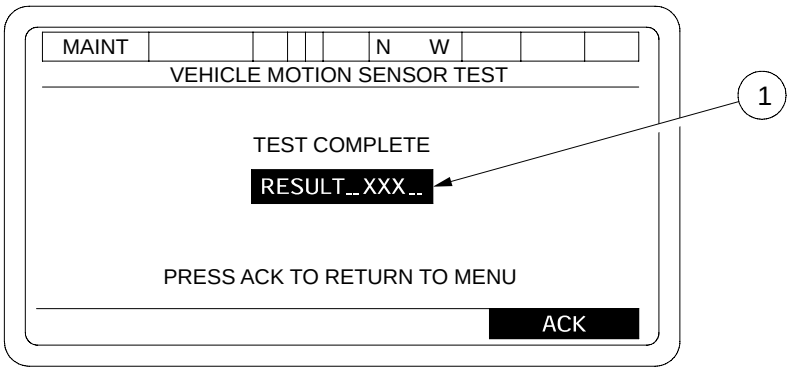


hipc4168

1 VMS GOOD
OR
CHASSIS SIDE VMS MODEM BAD
OR
CAB SIDE VMS MODEM BAD
OR
VMS BAD

c. When test is ended, depress soft key under ACK. This will take you back to MAINTENANCE MODE SELECT menu.

## 3-5A PDFCS AND PDI FAULT DETECTION - CONTINUED

### 3-5A.5 Audio Alert Test.

This test checks the PDFCS communications system fire mission alert notification. During this test, all crewmember's intercom control boxes should emit a repeating tone for 5 seconds. Checks of CVC helmets and intercoms should be performed.

This test should be performed under the standard vehicle setup conditions.

This test is used when directed by troubleshooting procedures, or if testing intercom/CVC is desirable.

a. Select AUDIO ALERT TEST from MAINTENANCE MODE SELECT menu. Press SELECT KEY. AUDIO ALERT TEST is displayed.

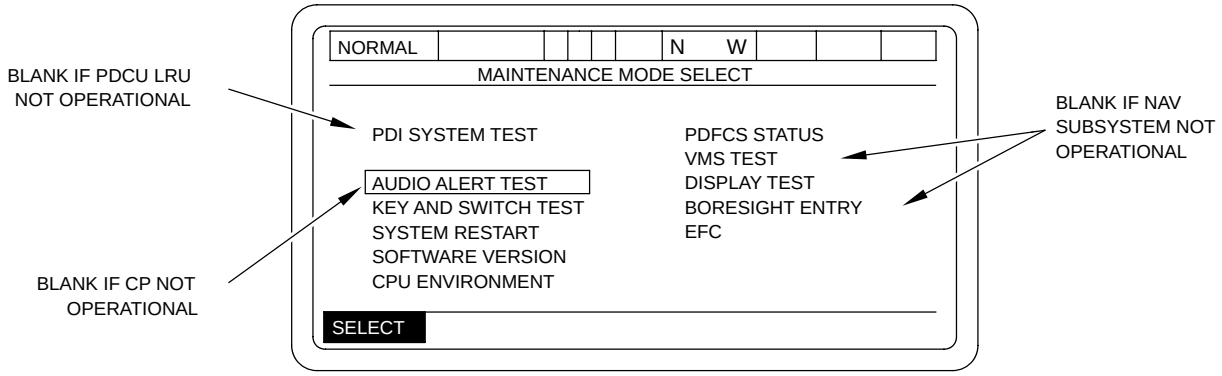


06pc135ta

b. Depressing soft key under CANCEL will take you back to MAINTENANCE MODE SELECT menu.

c. Depressing soft key under CONTINUE will start your AUDIO ALERT TEST.

d. When your AUDIO ALERT TEST is completed, you may depress soft key under CONTINUE to repeat test.

e. When test is completed, depress soft key under CANCEL to return to MAINTENANCE MODE SELECT menu.

f. If there is fault with your intercom/PDFCS, notify unit maintenance.

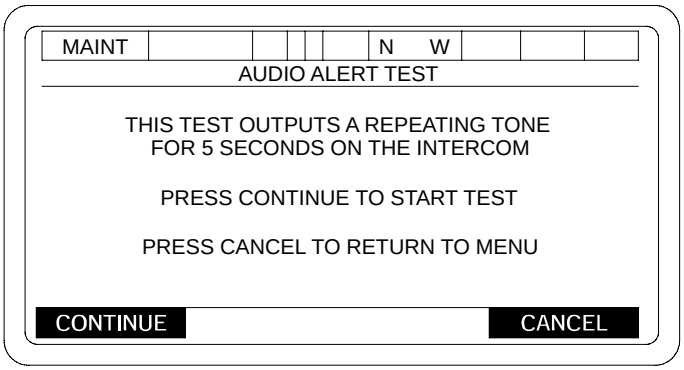


06pc550m

# 3-5A PDFCS AND PDI FAULT DETECTION - CONTINUED

## 3-5.6 Display Test.

This test checks the uniform color contrast of the display. Information appearing on the screen may become too light to read.

This test should be performed under standard vehicle setup condition (para 3-5A.3).

This test will be used when directed by troubleshooting procedures, or if testing of PDU screen is desirable.

a. Select DISPLAY TEST from MAINTENANCE MODE SELECT menu. Press SELECT key.

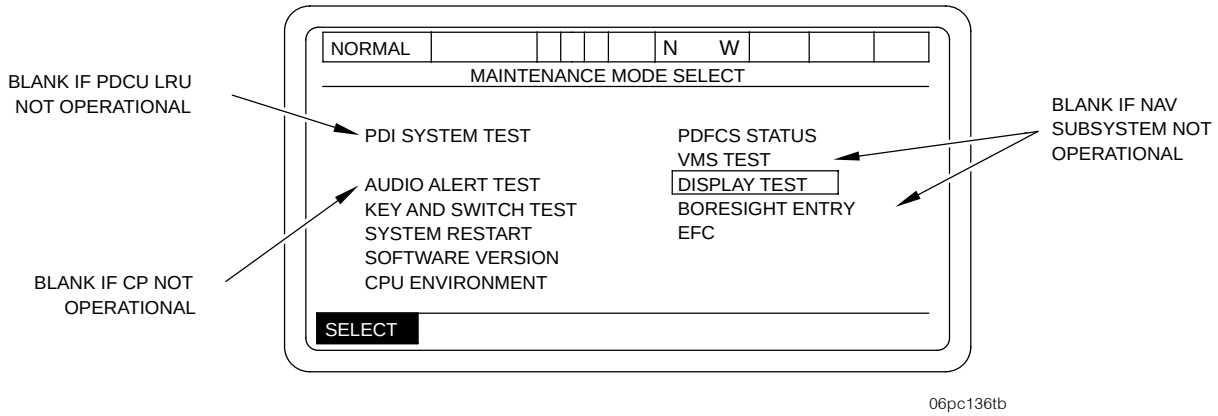


b. Your display will become highlighted for 2 seconds. After 2 seconds, the display will return to normal. You may reselect DISPLAY TEST if required.

c. If there are some spots on your display that did not light up, determine if this degraded mode is acceptable. If this is not acceptable, notify unit maintenance.

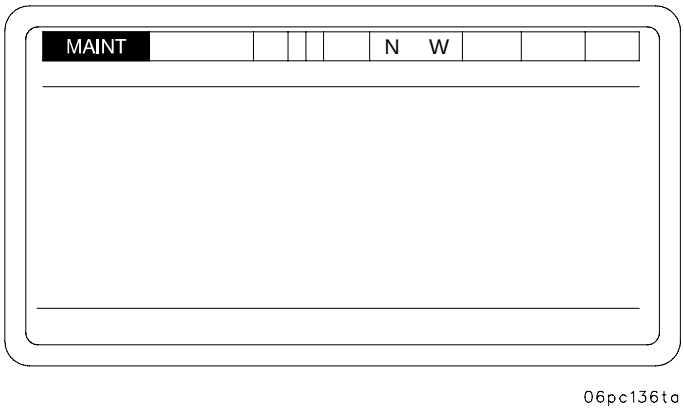

## 3-5A PDFCS AND PDI FAULT DETECTION - CONTINUED

### 3-5A.7 Key and Switch Test.

**NOTE**

PDFCS must be powered up at least 5 minutes prior to performing this test.

This test checks the response of each key and toggle switch on the display. The key marked T is for the embedded trainer switch and the key marked S is the GUN SERVO switch. Ensure that NOTES are observed when conducting this test.

This test should be performed under the standard vehicle setup condition (para 3-5A.3).

This test will be used when directed by troubleshooting procedures, or if malfunctions of PDFCS keypad and switches are apparent.

Select KEY AND SWITCH TEST from MAINTENANCE MODE SELECT menu. Press SELECT key.

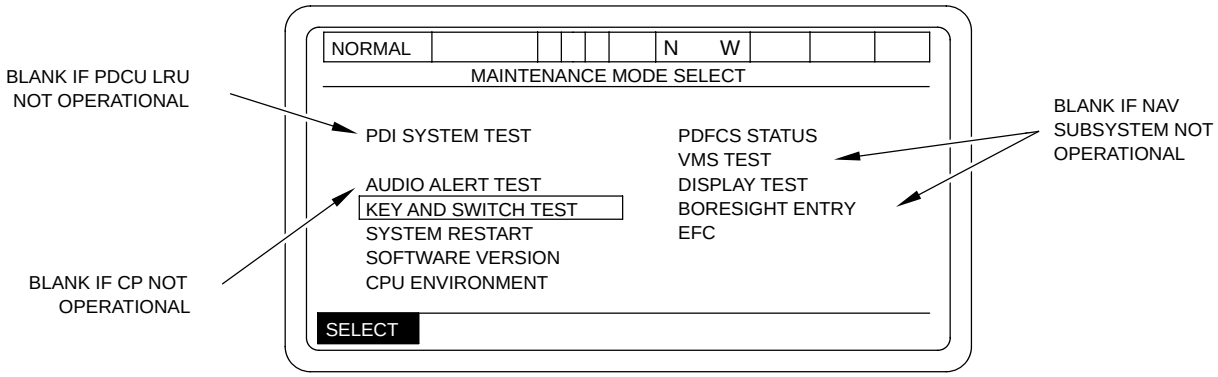


06pc137ta

**NOTE**

- Test ends when F1 (soft key) is depressed. Make sure you depress F1 soft key last while performing this test.
- Do not place PDFCS POWER switch to OFF during this test.

a. Depress each key in turn (including arrow keys, soft keys, LOAD, LAY, and STOW keys) and place both switches shown to ON/OFF for testing. As each key is depressed, it will be highlighted.

b. As each switch/toggle is moved, it will move up or down on your display.

c. If fault is indicated with your PDFCS keypad, switches, soft keys, arrow keys, LOAD, LAY, or STOW keys, notify unit maintenance.

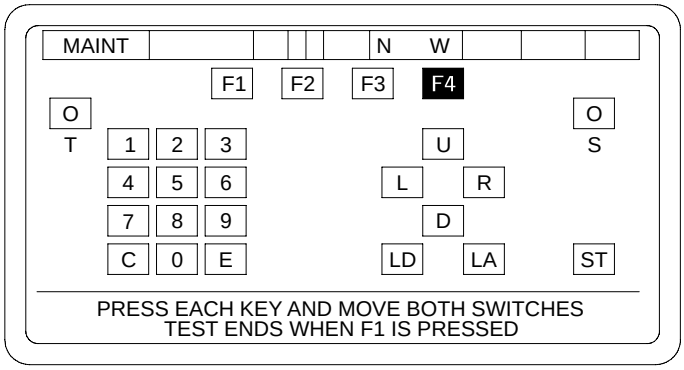


hipc4173

## 3-5A PDFCS AND PDI FAULT DETECTION - CONTINUED

### 3-5A.8 Boresight Angle Entry.

This test is designed for use by unit maintenance personnel only. Operators must not use this selection.

**WARNING**

This selection will be used by unit maintenance personnel to input correction to NAV SUBSYSTEM boresight. Entry of improper data into boresight angle entry menu can cause gun to be laid incorrectly. This could result in injury or death to personnel down range.

**NOTE**

If you accidently enter this mode, you must exit immediately by pressing the CANCEL key.

### 3-5A.9 Equivalent Full Charge (EFC).

Two sets of EFC data is maintained by the PDFCS; a cumulative set which contains the total number of rounds fired by the gun using legal charge and the accumulated EFC based on the total number of rounds fired; and an intermediate set which contains the number of rounds fired for each legal charge based on the number of rounds fired since the last update of the cumulative set. The PDFCS saves both data sets in the non-volatile memory during normal PDFCS power down sequencing.

The calculation of EFC is done automatically to the intermediate set for POC/BCS directed fire missions when the operator presses the soft key under the VERIFIED prompt on the VERIFY EXPENDED AMMO menu. However, should the operator not be able to VERIFY that the specified ammunition has been fired, or fire missions have been fired with data supplied by voice radios, or direct fire missions have occurred, then the operator will be required to update the PDFCS Ammunition Inventory and the EFC.

To update the EFC, access the SETUP AND INFORMATION Menu, place cursor on MAINTENANCE, and press soft key under SELECT prompt. The MAINTENANCE MODE SELECT menu will appear. Place cursor on EFC and press soft key under SELECT prompt, the EQUIVALENT FULL CHARGE menu will be displayed. On this screen the Intermediate round count is the number of rounds since the last time that the COS verified from his DA 4513 and pressed the “UP DATE EFC” soft function key. This display allows the operator to view the following features of a propellant charge combination: EFC Factors, Cumulative EFC, Intermediate Rounds, and Cumulative Rounds. In addition, the Total Rounds and the Cumulative EFC for all propellant charge combination is displayed.

**NOTE**

The operator may only alter the intermediate and cumulative rounds for a given propellant charge combination. When this information is updated, it indirectly updates the remaining information.

# 3-5A PDFCS AND PDI FAULT DETECTION - CONTINUED

## 3-5A.9 Equivalent Full Charge (EFC) - Continued

To update the EFC for a propellant charge combination, place cursor in RNDS column and move to the line which the propellant charge combination is on, press soft key under SELECT prompt. An update EFC rounds menu will be displayed with EFC data for the selected combination shown on line five of the display. Type number of rounds fired and press ENT key. The EFC menu will be displayed with number of rounds entered from previous step in the RNDS column. When the soft key under UPDATE EFC prompt is pressed, the TOTAL RNDS column will be updated with the addition, and RNDS column will become zero.

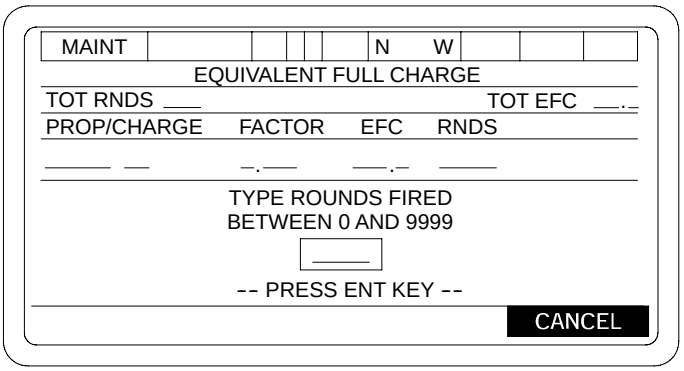


06pc426m

To return to the SETUP AND INFORMATION menu, press soft key under CANCEL prompt, the MAINTENANCE MODE SELECT menu will be displayed, press the soft key under CANCEL prompt, the SETUP AND INFORMATION menu will be displayed.

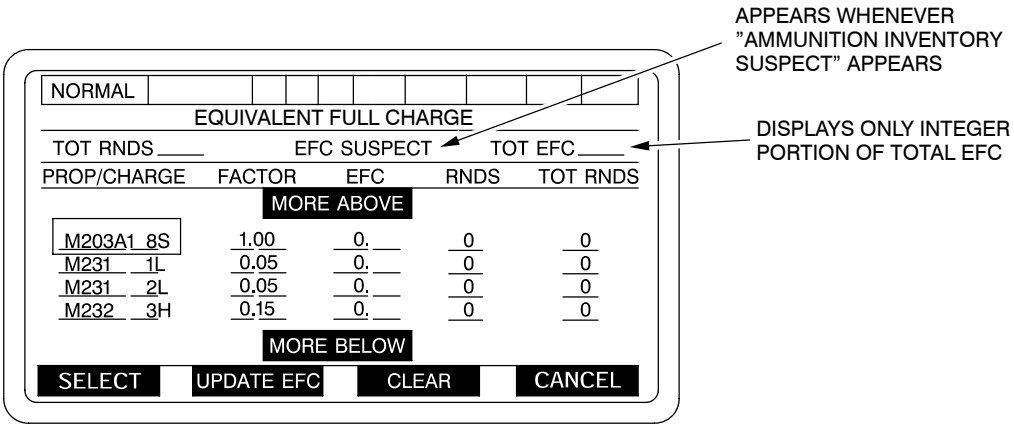


06pc138ta

**NOTE**

When RNDS or TOT RNDS is boxed and the CLEAR key is pressed, an "ARE YOU SURE?, YES, NO" PROMPT shall be presented to the operator.

## 3-5A PDFCS AND PDI FAULT DETECTION - CONTINUED

### 3-5A.10 PDFCS and PDCU Abbreviations.

| ABBREVIATION | NAME |
|---|---|
| ABCS | ARMY BATTLE COMMAND SYSTEM |
| AOF or AF | AZIMUTH OF FIRE |
| ATCCS | ARMY TACTICAL COMMAND AND CONTROL SYSTEM |
| AUXA | EXTERNAL BATTERY-A |
| AUXB | EXTERNAL BATTERY-B |
| AZ | AZIMUTH |
| AZ/EL | AZIMUTH AND ELEVATION TACHOMETERS |
| AZTACH | TACHOMETER |
| BATT | BATTERY |
| BB2 | BRUSH BLOCK #2 |
| BB6 | BRUSH BLOCK #6 |
| BB7 | BRUSH BLOCK #7 |
| BC | BALLISTIC COMPUTATION |
| BCS | BATTERY COMPUTER SYSTEM |
| BDE | BRIGADE |
| BFA | BATTLEFIELD FUNCTIONAL AREAS |
| BIT | BUILT IN TEST |
| BN | BATTALION |
| BPSL | BYPASS SOLENOID |
| BPV | BYPASS VALVE |
| C3 | COMMAND, CONTROL, AND COMMUNICATION |
| CBLS | CABLES |
| CDP | CONDITION DIPOLE |
| CHKFIRE | CHECK FIRE |
| CFN | COOLING FAN |
| CLCS | CLUTCH SOLENOID |
| CLV | CLUTCH VALVE |
| COMMO | COMMUNICATION |
| COS | CHIEF OF SECTION |
| COSCH | CHIEF OF SECTION CONTROL HANDLE |
| COSCH VLF | CHIEF OF SECTION CONTROL HANDLE VELOCITY FUSE |
| COTS | COMMERCIAL OFF THE SHELF |
| CP | COMMUNICATIONS PROCESSING |
| CPCI | COMPUTER PROGRAM CONFIGURATION ITEM |
| CPU | COMPUTER PROCESSING UNIT |
| CRSH | CURRENT SHUNT |
| CTRL | CONTROL |
| CTSW | COOLING TEMPERATURE SWITCH |
| DRU | DYNAMIC REFERENCE UNIT |

# 3-5A PDFCS AND PDI FAULT DETECTION - CONTINUED

## 3-5A.10 PDFCS and PDCU Abbreviations - Continued

| ABBREVIATION | NAME |
|---|---|
| EDS | ENHANCED DISPLAY SYSTEM |
| EL | ELEVATION |
| ELHP | ELEVATION HAND PUMP |
| ELSL | ELEVATION SELECT SOLENOID |
| ELSV | ELEVATION SERVO VALVE |
| ELTACH | ELEVATION TACHOMETER |
| ELTRUN | ELEVATION TRUNNION |
| ELV | ELEVATION SELECT VALVE |
| EQ | EQUILIBRATION |
| EQA | EQUILIBRATION ASSEMBLY |
| EQACC | EQUILIBRATION ACCUMULATOR |
| EQHP | EQUILIBRATOR HANDPUMP |
| EQMANIFOLD | EQUILIBRATION MANIFOLD |
| EQ CHARGE VALVE | EQUILIBRATOR CHARGE VALVE |
| FC | FIRE CONTROL |
| FIL | FILTER |
| FILA | FILTER ASSEMBLY |
| FIREMSN | FIRE MISSION |
| FLOM | FLOWMETER |
| FLU | FLUID |
| FLUSN | FLUID LEVEL SENSOR |
| GB | GIGABYTES |
| GCH | GUNNER'S CONTROL HANDLE |
| GNR | GUNNER |
| GPS | GLOBAL POSITIONING SYSTEM |
| HCB | HYDRAULIC CONTROL BOX |
| HPUMP | HANDPUMP |
| HYD | HYDRAULIC |
| HYM | HYDRAULIC PUMP ELECTRIC MOTOR |
| HYP | HYDRAULIC PUMP |
| HYPR | HYDRAULIC POWER RELAY |
| KU | KEYBOARD UNIT |
| LAN | LOCAL AREA NETWORK |
| MB | MEGABYTES |
| MO | MOVE ORDER |
| MSL | MODE SELECT SOLENOID |
| MSV | MODE SELECT VALVE |
| MVS | MUZZLE VELOCITY SENSOR |

## 3-5A PDFCS AND PDI FAULT DETECTION - CONTINUED

### 3-5A.10 PDFCS and PDCU Abbreviations - Continued

| ABBREVIATION | NAME |
|---|---|
| NA | NAV ASSIST |
| NAV | NAVIGATION |
| NRZ | NON-RETURN TO ZERO |
| OLSN | OVERLOAD SENSOR |
| PCU/PCU-2 | POWER CONDITIONER UNIT-2 |
| PDCU | PROGNOSTIC DIAGNOSTIC INTERFACE UNIT |
| PDFCS | PALADIN DIGITAL FIRE CONTROL SYSTEM |
| PDI | PROGNOSTIC/DIAGNOSTIC INTERFACE |
| PDU | PALADIN DISPLAY UNIT |
| PLGR | PRECISION LIGHTWEIGHT GPS RECEIVER |
| PRESS | PRESSURE |
| PSIAD | PALADIN SERIAL INTERFACE ADAPTER DEVICE |
| PWR | POWER |
| PXDCR | PRESSURE TRANSDUCER |
| RAM | RANDOM ACCESS MEMORY |
| REFIL | RETURN FILTER |
| RHDDC | REMOVABLE HARD DISK DRIVE CARTRIDGE |
| RR | RADIO RACK |
| SA | SITUATIONAL AWARENESS |
| SFIL | SUPPLY FILTER |
| SH | SHUNT |
| SINCGARS | SINGLE CHANNEL GROUND & AIRBORNE RADIO SUBSYSTEM |
| SL | SOLENOID |
| SN | SENSOR |
| SR | SLIP RING |
| SV | SERVO |
| SW | SWITCH |
| SYS | SYSTEM |
| TEMP | TEMPERATURE |
| TOC | TACTICAL OPERATION CENTER |
| TRAV | TRAVERSE |
| TRAV GEAR | TRAVERSING GEAR |
| TRDM | TRAVERSE DRIVE MECHANISM |
| TRLSL | TRAVERSE LIMIT SOLENOID |
| TRLSW | TRAVERSE LIMIT SWITCH |
| TRLV | TRAVERSE LIMIT VALVE |
| TRSL | TRAVERSE SELECT SOLENOID |
| TRSV | TRAVERSE SERVO VALVE |
| TRV | TRAVERSE SELECT VALVE |
| TSN | TEMPERATURE SENSOR |

# 3-5A PDFCS AND PDI FAULT DETECTION - CONTINUED

## 3-5A.10 PDFCS and PDCU Abbreviations - Continued

| ABBREVIATION | NAME |
|---|---|
| TTCBL | TUBE TEMPERATURE SENSOR GFE CABLE |
| TTTSN | TUBE TEMPERATURE SENSOR |
| TXDCR | TEMPERATURE TRANSDUCER |
| VMS | VEHICLE MOTION SENSOR |
| VMSC | VEHICLE MOTION SENSOR MODEM-CAB |
| VMSH | VEHICLE MOTION SENSOR MODEM-HULL |
| VLF | VELOCITY FUSES |
| WC | WEAPONS CONTROLLER |
| WPN | WEAPON |
| WTSL | WARMUP TEMPERATURE SOLENOID |
| WTSW | WARMUP TEMPERATURE SWITCH |
| WTV | WARMUP TEMPERATURE VALVE |

# 3-5A PDFCS AND PDI FAULT DETECTION - CONTINUED

## 3-5A.11 Software Version/Configuration Display

To view detailed software configuration information for each Computer Program Configuration Item (CPCI) move cursor to “SOFTWARE VERSION” on the Maintenance Mode SELECT MENU.

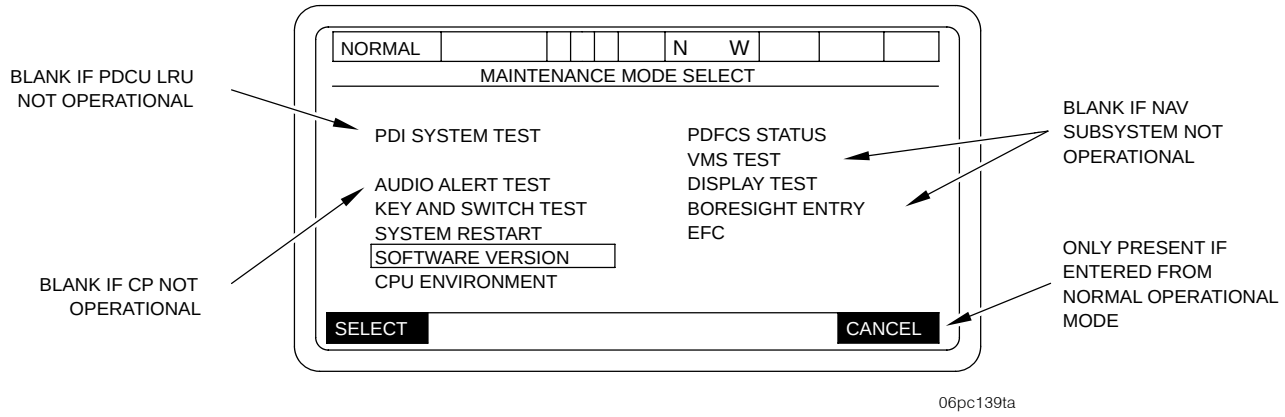


Press soft key label “SELECT” and the SOFTWARE VERSION/CONFIGURATION DISPLAY as shown below will appear.

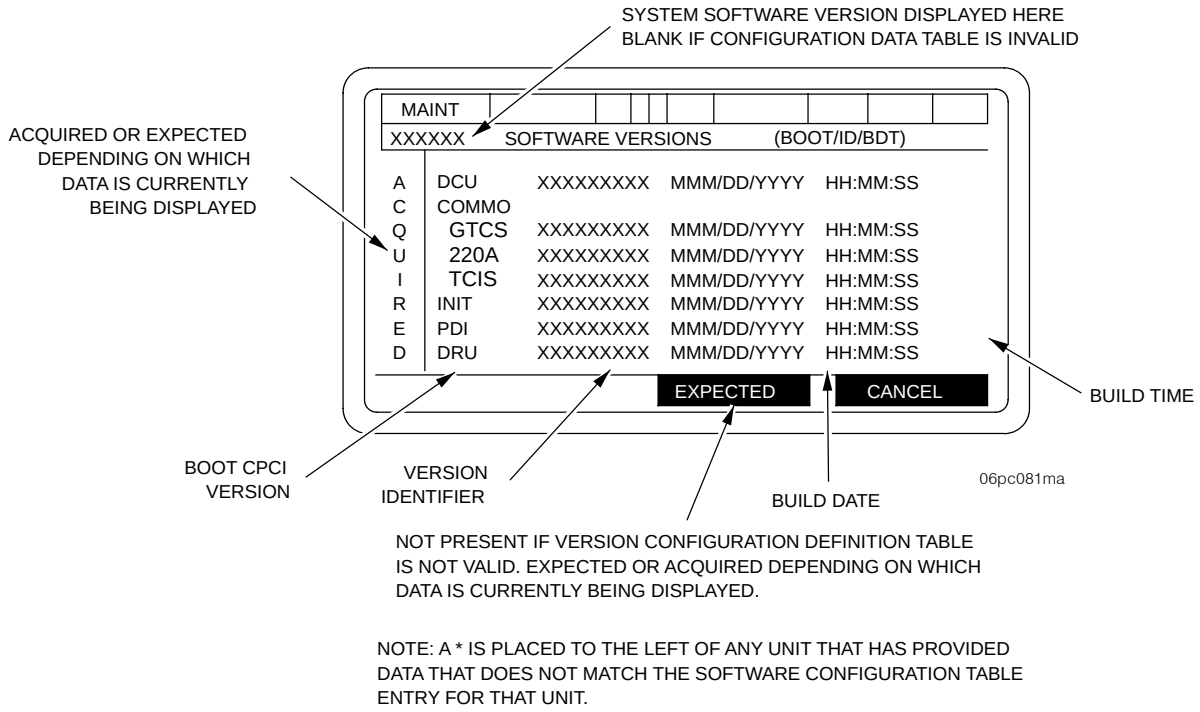


NOTE: A * IS PLACED TO THE LEFT OF ANY UNIT THAT HAS PROVIDED DATA THAT DOES NOT MATCH THE SOFTWARE CONFIGURATION TABLE ENTRY FOR THAT UNIT.

### NOTE

- An asterisk (*) is placed to the left of any unit that has provided data that does not match the expected software configuration table entry for that unit.
- Information displayed from the DRUH can be interpreted as version configuration data.

# 3-5A PDFCS AND PDI FAULT DETECTION - CONTINUED

## 3-5A.11 Software Version/Configuration Display - Continued

### NOTE

- When a CPCI other than the DCU is reported with an indirect configuration, then the system will run in a degraded mode and will declare the CPCI as unavailable.
- Initially, the ACQUIRED information of the display will give the boot loader, system software version and build data for each computer program configuration item that is acceptable to the system software configuration.
- If the CPCI is not acceptable, there will be an asterisk (*) to the left of the CPCI. If the asterisk is present, this will cause the system to operate in the DEGRADED mode unless the asterisk appears next to DCU, then the system will only operate in the Maintenance mode.
- To check which version of software is acceptable, press softkey under EXPECTED.
- If a CPCI is blank, the version of software loaded is acceptable with any system configuration.
- If uploading of software is required, notify Unit Maintenance.

## 3-5A.12 PCU - 2 Environment Display.

This display allows the operator to view system-related parameters as follows:

Inputs:

1. Operating System Version (O/S)
2. BIOS Information (Vendor & Version)
3. Elapsed Time Meter (in hours)

The tactical software receives the data listed above from the PDCU and presents this information to the operator on the PDU. This information is used by maintenance personnel.

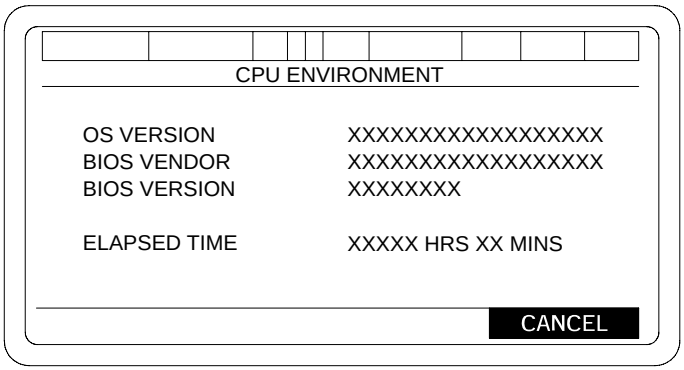


06pc428m

## 3-6 SYMPTOM INDEX.

### NOTE

- Before you use this troubleshooting table, be sure you have performed all applicable operating checks in Chapter 2.
- For corrective actions of malfunctions not listed in this table, notify unit maintenance.
- Wherever the word lubricate appears, see Appendix I

The following symptom index is to assist you in locating the correct troubleshooting procedure quickly.


| AFCS | Troubleshooting Procedure Page |
|---|---|
| AFCS-Software Lockup | 3-43 |
| Cab does not traverse freely under AFCS control | 3-43 |
| Cab creeps under AFCS control | 3-44 |
| Gun tube does not move to LOAD position when LOAD is selected under AFCS control | 3-45 |
| Gun tube does not move to STOW position when STOW is selected under AFCS control | 3-46 |
| Gun tube does not move to LAY position when LAY is selected under AFCS control | 3-47 |
| DU does not power up | 3-48 |
| Training mode cannot be selected | 3-48 |
| AFCS is not able to receive a mission | 3-48 |
| No audible alert for COS or crew (DU power is ON) | 3-49 |
| EL Panel messages are garbled/hard to read | 3-49 |
| DU soft keys/arrow keys/keypad switches, LOAD, LAY, or STOW keys do not respond properly | 3-49 |
| NAV subsystem fault (degraded mode) is indicated | 3-49 |
| DU subsystem fault (degraded mode) is indicated | 3-50 |
| WPN subsystem fault (degraded mode) is indicated | 3-50 |
| PDIU subsystem fault (degraded mode) is indicated | 3-50 |
| PCU subsystem fault (degraded mode) is indicated | 3-50 |
| MVS subsystem fault (degraded mode) is indicated | 3-50.1 |
| AFCS position drifts/DRUH “OP FAIL” is indicated | 3-50.2 |

## 3-6 SYMPTOM INDEX - CONTINUED


Troubleshooting Procedure Page

PDFCS

PDFCS-Software Lockup . . . . . 3-50.3
Cab does not traverse freely under PDFCS control . . . . . 3-50.3
Cab creeps under PDFCS control . . . . . 3-50.4
Gun tube does not move to LOAD position when LOAD is selected under PDFCS control . . . . . 3-50.5
Gun tube does not move to STOW position when STOW is selected under PDFCS control . . . . . 3-50.6
Gun tube does not move to LAY position when LAY is selected under PDFCS control . . . . . 3-50.7
PDU does not power up . . . . . 3-50.8
Training mode cannot be selected . . . . . 3-50.8
PDFCS is not able to receive a mission . . . . . 3-50.8
No audible alert for COS or crew (PDU power is ON) . . . . . 3-50.9
PDU messages are garbled/hard to read . . . . . 3-50.9
Keypad soft keys/arrow keys/keypad switches, LOAD, LAY, or STOW keys do not respond properly . . . . . 3-50.9
NAV subsystem fault (degraded mode) is indicated . . . . . 3-50.9
PDU subsystem fault (degraded mode) is indicated . . . . . 3-50.10
WPN subsystem fault (degraded mode) is indicated . . . . . 3-50.10
PDCU subsystem fault (degraded mode) is indicated . . . . . 3-50.10
PCU-2 subsystem fault (degraded mode) is indicated . . . . . 3-50.10
PMVS subsystem fault (degraded mode) is indicated . . . . . 3-50.11
PDFCS position drifts/DRU “OP FAIL” is indicated. Subsystem (degraded mode) is indicated . . . . . 3-50.11

MCS

MCS will not operate . . . . . 3-51
Insufficient air at low or high setting at one or more crew stations . . . . . 3-51
MCS does not provide cool air at one or more crew stations . . . . . 3-52
M3 heaters do not sufficiently heat air at mask or vest . . . . . 3-52

RADIOS . . . . . 3-52

COMMUNICATION, WIRE . . . . . 3-52

DRIVER’S NIGHT VIEWER . . . . . 3-52

ENGINE

Engine fails to crank or cranks slowly when starter switch is activated . . . . . 3-52
Engine cranks but fails to start . . . . . 3-53
Engine has low power . . . . . 3-53
Engine has low acceleration . . . . . 3-53
Engine overheats . . . . . 3-54
Low or no oil pressure . . . . . 3-54

## 3-6 SYMPTOM INDEX - CONTINUED

Troubleshooting Procedure Page

TRANSMISSION

Transmission does not drive in any gear or range . . . . . 3-54

STEERING

Vehicle difficult to steer . . . . . 3-55

BATTERIES/ELECTRICAL SYSTEM

Starter will not crank engine . . . . . 3-55
Batteries do not stay charged . . . . . 3-55
Master switch lamp does not light . . . . . 3-55

TRACKS AND SUSPENSION

Vehicle pulls to one side with steering wheel centered . . . . . 3-56
Vehicle throws tracks . . . . . 3-56

PERSONNEL HEATER

Heater smokes or bangs upon starting or doesn't start . . . . . 3-56
Heat output too low . . . . . 3-56
Heat exchanger loads up with soot and carbon . . . . . 3-56

PERSONNEL HEATER (GLOBAL A20)

**NOTE**

The operator can troubleshoot the codes listed below when displayed in the diagnostic display window. If any other codes are displayed, notify UNIT maintenance.

No personnel heater operation, no fault lamp operation, no diagnostic code display . . . . . 3-56
C3, Vent fan fault . . . . . 3-56
E1, Low voltage . . . . . 3-56.1
E3, Low burner air flow . . . . . 3-56.1
F1, Ignition overtime . . . . . 3-56.1
F2, Burner flameout . . . . . 3-56.1
F3, Heat limit . . . . . 3-56.1
F4, Vent air overheat . . . . . 3-56.1
F6, Inlet overheat, vehicle ambient temperature is above 131°F (56°C) . . . . . 3-56.2
F7, Exhaust overheat . . . . . 3-56.2

LEAD PARTICULATE FILTER AND VENTILATION SYSTEM

Air intake ventilation blower fails to operate . . . . . 3-56
Insufficient air flow from lead filter element . . . . . 3-56
Exhaust lamp fails to illuminate during exhaust ventilation blower operation . . . . . 3-56
No air flow during exhaust ventilation blower operation . . . . . 3-56

## 3-6 SYMPTOM INDEX - CONTINUED

Troubleshooting Procedure Page

BILGE PUMP

Bilge pump does not operate with bilge pump switch on . . . . . 3-57

CAB TRAVERSING SYSTEM

Cab does not traverse freely under handwheel operation . . . . . 3-57
Cab creeps when vehicle is in a canted position . . . . . 3-57
Cab does not traverse freely under hydraulic operation using COS and/or gunner's control handle . . . . . 3-57

CANNON BREECH

Primer fails to fire . . . . . 3-58
Primer does not eject . . . . . 3-58
Excessive blowback around breechblock . . . . . 3-58
Breech mechanism does not operate freely . . . . . 3-59
Gases accumulate in cab during firing . . . . . 3-59
Bore evacuator or muzzle brake thrust collar becomes loose . . . . . 3-59

MOUNT AND RECOIL MECHANISM

Howitzer has jerky or uneven recoil . . . . . 3-60
Howitzer returns to battery with excessive force . . . . . 3-60
Insufficient recoil travel . . . . . 3-60

TRAVEL LOCK

Travel lock will not operate . . . . . 3-60

LOADER RAMMER

Loader rammer fails to operate . . . . . 3-60

CANNON ELEVATION SYSTEM

Cannon will not elevate . . . . . 3-61

MOUNTED WATER RATION HEATER

Refer to TM 10-7310-241-12&P

PLGR or DAGR

GPS will not power-up . . . . . 3-61

M93 MVS (AFCS)

During AFCS Initialization: MVS will not power-up . . . . . 3-61
During "Fire Mission" processing: No muzzle velocity variance acquired . . . . . 3-61
MVS decrement rounds prematurely when breech is closed . . . . . 3-62

PMVS (PDFCS)

During PDFCS Initialization: PMVS will not power-up . . . . . 3-62
During "Fire Mission" processing: No muzzle velocity variance acquired . . . . . 3-62
PMVS decrement rounds prematurely when breech is closed . . . . . 3-62

**Table 3-1. TROUBLESHOOTING**

**MALFUNCTION**

**TEST OR INSPECTION**

**CORRECTIVE ACTION**

## AFCS

**WARNING**

Before troubleshooting AFCS gun positioning faults, make sure immediate area around and in the howitzer is clear of nonessential personnel and that no other equipment is within the 360 degree radius of the cab. Before moving gun servo switch to the ON position, announce loudly to everyone in immediate area, “AFCS POWER ON.” Serious injury or death, and/or equipment damage could result.

1. AFCS - SOFTWARE LOCKUP

Step 1. Place DU POWER switch OFF and wait at least 5 seconds.

Step 2. Place DU POWER switch ON and restart system. If lockup persists, notify unit maintenance.

2. CAB DOES NOT TRAVERSE FREELY UNDER AFCS CONTROL.

**NOTE**

Verify following: main drive gears and gun tube are unobstructed and main hydraulic pressure is at 1925 psi ± 50 psi.

Step 1. Verify that GUN SERVO light illuminates when LAY button is pressed.

a. If not ON, place gun switch ON.

b. If switch is ON, go to step 2.

Step 2. Check to see if you are in NORMAL OPERATIONS mode.

a. Verify that TRAVERSE mode switch is in the POWER position. Check EL Panel for mode display. Status line will indicate mode.

If not, enter proper mode.

b. If in NORMAL OPERATIONS mode, check EL Panel fields.

(1) Verify that LOAD, LAY, or STOW fields are displayed on EL Panel of DU when GUN SERVO SWITCH is on.

(2) LOAD, LAY, or STOW fields (graphics) are highlighted when displayed.

Gun is already in proper position.

(3) LOAD, LAY, or STOW fields (graphics) are displayed in normal form.

Reselect proper functional key. If cab does not traverse freely, notify unit maintenance. Complete mission in DEGRADED mode.

(4) LOAD, LAY, or STOW fields are not displayed

. If fields are not displayed, go to step 3.

**Table 3-1. TROUBLESHOOTING - Continued**

| MALFUNCTION | TEST OR INSPECTION | CORRECTIVE ACTION |
|---|---|---|

## AFCS - Continued

Step 3. Check DU for fault indication.

a. GUN SERVO indicator not lit during LOAD/LAY/STOW operation.

Run PDIU system test (para 3-5.3) and notify unit maintenance. Complete mission in DEGRADED mode.

b. FAULT indicator lit.

Check status line for faulty hardware, run PDIU system test (para 3-5.3) and notify unit maintenance. Complete mission in DEGRADED mode.

3. CAB CREEPS UNDER AFCS CONTROL.

Step 1. Verify that GUN SERVO ON/OFF switch is ON.

a. If not ON, place switch ON.

b. If switch is ON, go to step 2.

Step 2. Check to see if you are in NORMAL OPERATIONS mode.

a. Check EL Panel for mode display.

If not in proper mode, enter proper mode.

b. If in NORMAL OPERATIONS mode, check EL Panel fields.

(1) Verify that LOAD, LAY, or STOW fields are displayed on EL Panel of DU.

(2) LOAD, LAY, or STOW fields are highlighted, when displayed.

Gun is already in proper position, cab should not creep. If cab still creeps, notify unit maintenance. Complete mission in DEGRADED mode.

(3) LOAD, LAY, or STOW fields are displayed properly.

Reselect proper functional key. If cab still creeps, notify unit maintenance.

(4) LOAD, LAY, or STOW fields are not displayed.

If fields are not displayed, go to step 3.

Step 3. Check DU for fault indication.

a. GUN SERVO indicator not lit during LOAD/LAY/STOW operation.

Run PDIU system test (para 3-5.3) and notify unit maintenance. Complete mission in DEGRADED mode.

b. FAULT indicator lit.

Check status line on EL Panel for faulty hardware, run PDIU system test (para 3-5.3), and notify unit maintenance. Complete mission in DEGRADED mode.

Table 3-1. TROUBLESHOOTING - Continued

| MALFUNCTION | TEST OR INSPECTION | CORRECTIVE ACTION |
|---|---|---|

## AFCS - Continued

4. GUN TUBE DOES NOT MOVE TO LOAD POSITION WHEN LOAD IS SELECTED UNDER AFCS CONTROL.

Step 1. Verify that GUN SERVO ON/OFF switch is ON.

a. If not ON, place switch ON.

b. If switch is ON, go to step 2.

Step 2. Check to see if you are in NORMAL OPERATIONS mode.

a. Verify that TRAVERSE mode switch is in the POWER position. Check EL Panel for mode display.

If not in proper mode, enter proper mode.

b. If in NORMAL OPERATIONS mode, check EL Panel fields.

(1) Verify that LOAD, LAY or STOW fields are displayed on EL Panel of DU.

(2) LOAD, LAY, or STOW fields are highlighted, when displayed.

Gun is already in proper position.

(3) LOAD, LAY, or STOW fields are displayed properly.

Reselect proper functional key. If gun tube still does not move to LOAD position, notify unit maintenance. Complete mission in DEGRADED mode.

(4) LOAD, LAY, or STOW fields are not displayed.

If fields are not displayed, go to step 3.

Step 3. Check DU for fault indication.

a. GUN SERVO indicator not lit during LOAD/LAY/STOW operation.

Run PDIU system test (para 3-5.3) and notify unit maintenance. Complete mission in DEGRADED mode.

b. FAULT indicator lit.

Check status line on EL Panel for faulty hardware, run PDIU system test (para 3-5.3), and notify unit maintenance. Complete mission in DEGRADED mode.

**Table 3-1. TROUBLESHOOTING - Continued**

**MALFUNCTION**

**TEST OR INSPECTION**

**CORRECTIVE ACTION**

## AFCS - Continued

5. GUN TUBE DOES NOT MOVE TO STOW POSITION WHEN STOW IS SELECTED UNDER AFCS CONTROL.

Step 1. Verify that GUN SERVO ON/OFF switch is ON.

a. If not ON, place switch ON.

b. If switch is ON, go to step 2.

Step 2. Check to see if you are in NORMAL OPERATIONS mode.

a. Verify that TRAVERSE mode switch is in the POWER position. Check EL Panel for mode display.

If not in proper mode, enter proper mode.

b. If in NORMAL OPERATIONS mode, check EL Panel fields.

(1) Verify that LOAD, LAY, or STOW fields are displayed on EL Panel of DU.

(2) LOAD, LAY, or STOW fields are highlighted when displayed.

Gun tube is already in proper position.

(3) LOAD, LAY, or STOW fields are displayed properly.

Reselect proper functional key. If gun tube does not traverse/elevate freely, notify unit maintenance. Complete mission in DEGRADED mode.

(4) LOAD, LAY, or STOW fields are not displayed.

If fields are not displayed, go to step 3.

Step 3. Check DU for fault indication.

a. GUN TUBE SERVO indicator not lit during LOAD/LAY/STOW operation.

Run PDIU system test (para 3-5.3) and notify unit maintenance. Complete mission in DEGRADED mode.

b. FAULT indicator lit.

Check status line on EL Panel for faulty hardware, run PDIU system test (para 3-5.3), and notify unit maintenance. Complete mission in DEGRADED mode.

Table 3-1. TROUBLESHOOTING - Continued

| MALFUNCTION | TEST OR INSPECTION | CORRECTIVE ACTION |
|---|---|---|

## AFCS - Continued

6. GUN TUBE DOES NOT MOVE TO LAY POSITION WHEN LAY IS SELECTED UNDER AFCS CONTROL.

Step 1. Verify that GUN SERVO ON/OFF switch is ON.

a. If not ON, place switch ON.

b. If switch is ON, verify TRAVERSE LOCK is in UNLOCKED position. Go to step 2.

Step 2. Check to see if you are in NORMAL OPERATIONS mode.

a. Verify that TRAVERSE mode switch is in the POWER position. Check EL Panel for mode display.

If not in proper mode, enter proper mode.

b. If in NORMAL OPERATIONS mode, check EL Panel fields.

(1) Verify that LOAD, LAY, or STOW fields are displayed on EL Panel of DU.

(2) LOAD, LAY, or STOW fields are highlighted, when displayed.

Gun tube is already in proper position.

(3) LOAD, LAY, or STOW fields are displayed properly.

Reselect proper functional key. If gun tube still does not move to LAY position, notify unit maintenance. Complete mission in DEGRADED mode.

(4) LOAD, LAY, or STOW fields are not displayed.

If fields are not displayed, go to step 3.

Step 3. Check DU for fault indication.

a. GUN TUBE SERVO indicator not lit during LOAD/LAY/STOW operation.

Run PDIU system test (para 3-5.3) and notify unit maintenance. Complete mission in DEGRADED mode.

b. FAULT indicator lit.

Check status line on EL Panel for faulty hardware and notify unit maintenance. Complete mission in DEGRADED mode.

Table 3-1. TROUBLESHOOTING - Continued

| MALFUNCTION | TEST OR INSPECTION | CORRECTIVE ACTION |
|---|---|---|

## AFCS - Continued

7. DU DOES NOT POWER UP.

Step 1. Verify that MASTER and HYDRAULIC POWER switches are ON.

a. If not ON, place switch(es) ON.

b. If switch(es) are ON, go to step 2.

Step 2. Verify that PCU circuit breakers are ON.

a. If not ON, place appropriate circuit breaker(s) ON.

b. If all circuit breakers are ON, notify unit maintenance.

8. TRAINING MODE CANNOT BE SELECTED.

Step 1. Verify that you are in the proper mode for TRAINING selection.

a. If not, enter TRAINING mode.

b. If in TRAINING mode, place the TRAINING ON/OFF switch in ON position.

Step 2. TRAINING mode still cannot be entered.

Notify unit maintenance.

9. AFCS IS NOT ABLE TO RECEIVE A MISSION.

Step 1. Verify that during POWER UP STATUS, AFCS is okay.

a. AFCS subsystems do not check out as OK. If 1553 bus is not OK, notify unit maintenance. If the 1553 bus is degraded, go to step 2.

b. AFCS subsystems check out OK. Go to step 2.

Step 2. Verify that you are in proper mode (NORMAL OPERATIONS).

a. If not in proper mode, enter NORMAL OPERATIONS mode and go through NET ACCESS and NET ADDRESS displays until you get to SETUP AND INFORMATION display. Now go to step 3.

b. If already in proper mode, go to step 3.

Step 3. Verify that data entry has been provided and is correct for all items marked with an * on SETUP AND INFORMATION display.

a. If data has not been entered, enter data now to initialize system. Now system is able to receive a mission.

b. If data has been entered for the * items and you still are unable to receive a mission, notify unit maintenance.

Table 3-1. TROUBLESHOOTING - Continued

| MALFUNCTION | TEST OR INSPECTION | CORRECTIVE ACTION |
|---|---|---|

## AFCS - Continued

10. NO AUDIBLE ALERT FOR COS OR CREW (DU POWER IS ON).

Step 1. Verify that wire/cable connections are tight.

If wire/cable connections are tight, go to step 2.

Step 2. Go to para 3-5.6 and perform Audio Alert Test.

a. If intercom is not adjusted properly, adjust it now.

b. Rerun Audio Alert Test and go to step 3.

Step 3. If there is still no audible signal, notify unit maintenance that intercom/AFCS is faulty.

11. EL PANEL MESSAGES ARE GARBLED/HARD TO READ.

Step 1. Verify that wire/cable connections are tight.

If wire/cable connections are tight, go to step 2.

Step 2. Go to para 3-5.7 and perform Display Test.

a. If test indicates that some of the pixels on EL Panel are burned out, notify unit maintenance that DU (EL Panel) is faulty.

b. If test does not indicate a problem with pixels, have unit maintenance check AFCS.

12. DU SOFT KEYS/ARROW KEYS/KEYPAD SWITCHES, LOAD, LAY, OR STOW KEYS DO NOT RESPOND PROPERLY.

Step 1. Verify that cable/harness connections are tight.

If wire/cable connections are tight, go to step 2.

Step 2. Go to para 3-5.8 and perform Key and Switch Test.

a. If test indicates a fault, notify unit maintenance that DU is faulty.

b. If no fault is indicated, notify unit maintenance to check AFCS.

13. NAV SUBSYSTEM FAULT (DEGRADED MODE) IS INDICATED.

Step 1. Verify that wire/cable connections are tight.

If wire/cable connections are tight, go to step 2.

Step 2. Traverse cab left and right 90 degrees from travel lock position and verify fault has been elminated. If not, clean slip ring segment boards (para 3-8.17) and try the VMS test again before notifying unit maintenance.

Step 3. Go to para 3-5.2 and perform BIT Status Test.

a. Determine which subsystem is degraded. If VMS fault is indicated, go to para 3-5.5 and perform VMS test. Notify unit maintenance of particular fault.

b. Check PDIU reconfiguration advice (Appendix G). Determine if DEGRADED mode is acceptable. (Certain degraded subsystems will not interfere with AFCS operation or mission capability, i.e., VMS is out.) If acceptable, continue mission.

Table 3-1. TROUBLESHOOTING - Continued

| MALFUNCTION | TEST OR INSPECTION | CORRECTIVE ACTION |
|---|---|---|

## AFCS - Continued

14. DU SUBSYSTEM FAULT (DEGRADED MODE) IS INDICATED.

    Step 1. Verify that wire/cable connections are tight.

    If wire/cable connections are tight, go to step 2.

    Step 2. Go to para 3-5.2 and perform BIT Status Test.

    a. Determine which subsystem is degraded. Notify unit maintenance of particular fault.

    b. Determine if DEGRADED mode is acceptable. (Certain degraded subsystems will not interfere with AFCS operation or mission capability; i.e., Embedded Trainer is out.) If acceptable, continue mission.

15. WPN SUBSYSTEM FAULT (DEGRADED MODE) IS INDICATED.

    Step 1. Verify that wire/cable connections are tight.

    If wire/cable connections are tight, go to step 2.

    Step 2. Go to para 3-5.2 and perform BIT Status Test.

    a. Determine which subsystem is degraded. Notify unit maintenance of particular fault.

    b. Check PDIU reconfiguration advice (Appendix G). Determine if DEGRADED mode is acceptable. (Certain degraded subsystems will not interfere with AFCS operation or mission capability; i.e., Tube Temp is out.) If acceptable, continue mission.

16. PDIU SUBSYSTEM FAULT (DEGRADED MODE) IS INDICATED.

    Step 1. Verify that wire/cable connections are tight.

    If wire/cable connections are tight, go to step 2.

    Step 2. Go to para 3-5.2 and perform BIT Status Test.

    a. Determine which subsystem is degraded. Notify unit maintenance of particular fault.

    b. Determine if DEGRADED mode is acceptable. (Certain degraded subsystems will not interfere with AFCS operation or mission; i.e., PDIU is out.) If acceptable, continue mission.

17. PCU SUBSYSTEM FAULT (DEGRADED MODE) IS INDICATED.

    Step 1. Verify that wire/cable connections are tight.

    If wire/cable connections are tight, go to step 2.

    Step 2. Go to para 3-5.2 and perform BIT Status Test.

    a. Determine which subsystem is degraded. Notify unit maintenance of particular fault.

    b. Determine if DEGRADED mode is acceptable. (Certain degraded subsystems will not interfere with AFCS operation or mission capability; i.e., PCU BIT failed.) If acceptable, continue mission.

Table 3-1. TROUBLESHOOTING - Continued

| MALFUNCTION<br>TEST OR INSPECTION | CORRECTIVE ACTION |
|---|---|

## AFCS - Continued

18. MVS SUBSYSTEM (DEGRADED MODE) IS INDICATED.

**NOTE**

Make sure the 1553 termination connector is installed (para 2-22.3) if M93 radar antenna transceiver is not mounted.

Step 1. Verify that cable/harness connections are tight.

If wire/cable connections are tight, go to step 2.

Step 2. Go to para 3-5.2 and perform BIT status test.

a. Determine which subsystem is degraded. Notify unit maintenance of particular fault.

b. Determine if DEGRADED mode is acceptable. (Certain degraded subsytems will not interfere with AFCS operation or mission capability; i.e. PCU bit failed.) If acceptable, continue mission.

**Table 3-1. TROUBLESHOOTING - Continued**

**MALFUNCTION**

**TEST OR INSPECTION**

**CORRECTIVE ACTION**

## AFCS - Continued

18.1. AFCS POSITION DRIFTS/DRUH "OP FAIL" IS INDICATED.

### NOTE

- Infrequently, the AFCS position has been observed to drift while the howitzer is stationary, or the "NAV OUT - DRU OP FAIL" alert message is displayed, for no apparent reason. These problems have been traced to errors in communications between the AFCS and DRUH. With the GPS receiver (PLGR) installed and the AFCS operated in a GPS aided mode, the problem will be bound to an acceptable level. If the PLGR is off or not receiving acceptable signals from four satellites, the drift may occur to an unacceptable level.
- Unless there is an operational constraint on using GPS, it is recommended that the PLGR be installed and the AFCS be operated in the GPS aided mode.

Follow the steps below if position is drifting when the howitzer is stationary and any of the following symptoms are observed: (Note that these conditions are normal when the howitzer is travelling.)

a. "ZPT" is displayed in field 6 in the top line of the display. (Note that it takes about 30 seconds after the vehicle stops for a normal "ZPT" indication to clear.)

b. AFCS position changes more than 10 meters.

c. The "ZUPT REQUIRED" alert message is displayed.

d. The "NAV POS UPDATE REQUESTED" alert message is displayed.

e. The "PRESS ACK WHEN TUBE STOWED" alert message is displayed when the howitzer hasn't traveled.

f. The "POS UPDATE INTERRUPTED" alert message is displayed after a NAV UPDATE is attempted.

g. The "POS UPDATE RJTD HOWITZER MOVG" alert message is displayed after a NAV UPDATE is attempted.

(Note that the "POSITION UPDATE REQUIRED" alert message can be triggered by several conditions. Unless accompanied by one of the above indications, it is not a symptom of position drift.)

If any of the position drift symptoms is observed or the "NAV OUT - DRU OP FAIL" alert message is displayed, perform the following procedure:

Step 1. Power down the AFCS.

Step 2. Power the AFCS back up.

Step 3. Reinitialize the AFCS

### NOTE

Do not replace the DRUH or the ACU for position drift or DRU OP FAIL problems. If cycling power, as discussed above, doesn't relieve the symptoms, notify unit maintenance.

Table 3-1. TROUBLESHOOTING

| MALFUNCTION<br>TEST OR INSPECTION | CORRECTIVE ACTION |
|---|---|

## PDFCS

**WARNING**

Before troubleshooting PDFCS gun positioning faults, make sure immediate area around and in the howitzer is clear of nonessential personnel and that no other equipment is within the 360 degree radius of the cab. Before moving gun servo switch to the ON position, announce loudly to everyone in immediate area, "PDFCS POWER ON." Serious injury or death, and/or equipment damage could result.

18.2 PDFCS - SOFTWARE LOCKUP

Step 1. Place PDU POWER switch OFF and wait at least 5 seconds.

Step 2. Place PDU POWER switch ON and restart system. If lockup persists, notify unit maintenance.

18.3 CAB DOES NOT TRAVERSE FREELY UNDER PDFCS CONTROL.

**NOTE**

Verify following: main drive gears and gun tube are unobstructed and main hydraulic pressure is at 1925 psi ± 50 psi.

Step 1. Verify that GUN SERVO light illuminates when LAY button is pressed.

a. If not ON, place gun switch ON.

b. If switch is ON, go to step 2.

Step 2. Check to see if you are in NORMAL OPERATIONS mode.

a. Verify that TRAVERSE mode switch is in the POWER position. Check PDU for mode display. Status line will indicate mode. If not, enter proper mode.

b. If in NORMAL OPERATIONS mode, check display fields.

(1) Verify that LOAD, LAY, or STOW fields are displayed on PDU when GUN SERVO SWITCH is on.

(2) LOAD, LAY, or STOW fields (graphics) are highlighted when displayed.

Gun is already in proper position.

(3) LOAD, LAY, or STOW fields (graphics) are displayed in normal form.

Reselect proper functional key. If cab does not traverse freely, notify unit maintenance. Complete mission in DEGRADED mode.

(4) LOAD, LAY, or STOW fields are not displayed

. If fields are not displayed, go to step 3.

**Table 3-1. TROUBLESHOOTING - Continued**

| MALFUNCTION | TEST OR INSPECTION | CORRECTIVE ACTION |
|---|---|---|

## PDFCS - Continued

Step 3. Check PDU for fault indication.

a. GUN SERVO indicator not lit during LOAD/LAY/STOW operation.

Run PDCU system test (para 3-5A.3) and notify unit maintenance. Complete mission in DEGRADED mode.

b. FAULT indicator lit.

Check status line for faulty hardware, run PDCU system test (para 3-5A.3) and notify unit maintenance. Complete mission in DEGRADED mode.

18.4 CAB CREEPS UNDER PDFCS CONTROL.

Step 1. Verify that GUN SERVO ON/OFF switch is ON.

a. If not ON, place switch ON.

b. If switch is ON, go to step 2.

Step 2. Check to see if you are in NORMAL OPERATIONS mode.

a. Check PDU for mode display.

If not in proper mode, enter proper mode.

b. If in NORMAL OPERATIONS mode, check display fields.

(1) Verify that LOAD, LAY, or STOW fields are displayed on PDU.

(2) LOAD, LAY, or STOW fields are highlighted, when displayed.

Gun is already in proper position, cab should not creep. If cab still creeps, notify unit maintenance. Complete mission in DEGRADED mode.

(3) LOAD, LAY, or STOW fields are displayed properly.

Reselect proper functional key. If cab still creeps, notify unit maintenance.

(4) LOAD, LAY, or STOW fields are not displayed.

If fields are not displayed, go to step 3.

Step 3. Check PDU for fault indication.

a. GUN SERVO indicator not lit during LOAD/LAY/STOW operation.

Run PDCU system test (para 3-5A.3) and notify unit maintenance. Complete mission in DEGRADED mode.

b. FAULT indicator lit.

Check status line on PDU for faulty hardware, run PDCU system test (para 3-5A.3), and notify unit maintenance. Complete mission in DEGRADED mode.

Table 3-1. TROUBLESHOOTING - Continued

| MALFUNCTION | TEST OR INSPECTION | CORRECTIVE ACTION |
|---|---|---|

## PDFCS - Continued

18.5 GUN TUBE DOES NOT MOVE TO LOAD POSITION WHEN LOAD IS SELECTED UNDER PDFCS CONTROL.

Step 1. Verify that GUN SERVO ON/OFF switch is ON.

a. If not ON, place switch ON.

b. If switch is ON, go to step 2.

Step 2. Check to see if you are in NORMAL OPERATIONS mode.

a. Verify that TRAVERSE mode switch is in the POWER position. Check PDU for mode display. If not in proper mode, enter proper mode.

b. If in NORMAL OPERATIONS mode, check display fields.

(1) Verify that LOAD, LAY or STOW fields are displayed on PDU.

(2) LOAD, LAY, or STOW fields are highlighted, when displayed.

Gun is already in proper position.

(3) LOAD, LAY, or STOW fields are displayed properly.

Reselect proper functional key. If gun tube still does not move to LOAD position, notify unit maintenance. Complete mission in DEGRADED mode.

(4) LOAD, LAY, or STOW fields are not displayed.

If fields are not displayed, go to step 3.

Step 3. Check PDU for fault indication.

a. GUN SERVO indicator not lit during LOAD/LAY/STOW operation.

Run PDCU system test (para 3-5A.3) and notify unit maintenance. Complete mission in DEGRADED mode.

b. FAULT indicator lit.

Check status line on PDU for faulty hardware, run PDCU system test (para 3-5A.3), and notify unit maintenance. Complete mission in DEGRADED mode.

**Table 3-1. TROUBLESHOOTING - Continued**

| MALFUNCTION | TEST OR INSPECTION | CORRECTIVE ACTION |
|---|---|---|

## PDFCS - Continued

18.6 GUN TUBE DOES NOT MOVE TO STOW POSITION WHEN STOW IS SELECTED UNDER PDFCS CONTROL.

Step 1. Verify that GUN SERVO ON/OFF switch is ON.

a. If not ON, place switch ON.

b. If switch is ON, go to step 2.

Step 2. Check to see if you are in NORMAL OPERATIONS mode.

a. Verify that TRAVERSE mode switch is in the POWER position. Check PDU for mode display. If not in proper mode, enter proper mode.

b. If in NORMAL OPERATIONS mode, check display fields.

(1) Verify that LOAD, LAY, or STOW fields are displayed on PDU.

(2) LOAD, LAY, or STOW fields are highlighted when displayed.

Gun tube is already in proper position.

(3) LOAD, LAY, or STOW fields are displayed properly.

Reselect proper functional key. If gun tube does not traverse/elevate freely, notify unit maintenance. Complete mission in DEGRADED mode.

(4) LOAD, LAY, or STOW fields are not displayed.

If fields are not displayed, go to step 3.

Step 3. Check PDU for fault indication.

a. GUN TUBE SERVO indicator not lit during LOAD/LAY/STOW operation.

Run PDCU system test (para 3-5A.3) and notify unit maintenance. Complete mission in DEGRADED mode.

b. FAULT indicator lit.

Check status line on PDU for faulty hardware, run PDCU system test (para 3-5A.3), and notify unit maintenance. Complete mission in DEGRADED mode.

Table 3-1. TROUBLESHOOTING - Continued

| MALFUNCTION | TEST OR INSPECTION | CORRECTIVE ACTION |
|---|---|---|

## PDFCS - Continued

18.7 GUN TUBE DOES NOT MOVE TO LAY POSITION WHEN LAY IS SELECTED UNDER PDFCS CONTROL.

Step 1. Verify that GUN SERVO ON/OFF switch is ON.

a. If not ON, place switch ON.

b. If switch is ON, verify TRAVERSE LOCK is in UNLOCKED position. Go to step 2.

Step 2. Check to see if you are in NORMAL OPERATIONS mode.

a. Verify that TRAVERSE mode switch is in the POWER position. Check PDU for mode display. If not in proper mode, enter proper mode.

b. If in NORMAL OPERATIONS mode, check display fields.

(1) Verify that LOAD, LAY, or STOW fields are displayed on PDU.

(2) LOAD, LAY, or STOW fields are highlighted, when displayed.

Gun tube is already in proper position.

(3) LOAD, LAY, or STOW fields are displayed properly.

Reselect proper functional key. If gun tube still does not move to LAY position, notify unit maintenance. Complete mission in DEGRADED mode.

(4) LOAD, LAY, or STOW fields are not displayed.

If fields are not displayed, go to step 3.

Step 3. Check PDU for fault indication.

a. GUN TUBE SERVO indicator not lit during LOAD/LAY/STOW operation.

Run PDCU system test (para 3-5A.3) and notify unit maintenance. Complete mission in DEGRADED mode.

b. FAULT indicator lit.

Check status line on PDU for faulty hardware and notify unit maintenance. Complete mission in DEGRADED mode.

Table 3-1. TROUBLESHOOTING - Continued

| MALFUNCTION | TEST OR INSPECTION | CORRECTIVE ACTION |
|---|---|---|

## PDFCS - Continued

18.8 PDU DOES NOT POWER UP.

Step 1. Verify that MASTER and HYDRAULIC POWER switches are ON.

a. If not ON, place switch(es) ON.

b. If switch(es) are ON, go to step 2.

Step 2. Verify that PCU-2 circuit breakers are ON.

a. If not ON, place appropriate circuit breaker(s) ON.

b. If all circuit breakers are ON, notify unit maintenance.

18.9 TRAINING MODE CANNOT BE SELECTED.

Step 1. Verify that you are in the proper mode for TRAINING selection.

a. If not, enter TRAINING mode.

b. If in TRAINING mode, place the TRAINING ON/OFF switch in ON position.

Step 2. TRAINING mode still cannot be entered.

Notify unit maintenance.

18.10 PDFCS IS NOT ABLE TO RECEIVE A MISSION.

Step 1. Verify that during POWER UP STATUS, PDFCS is okay.

a. PDFCS subsystems do not check out as OK. If not OK, notify unit maintenance. If degraded, go to step 2.

b. PDFCS subsystems check out OK. Go to step 2.

Step 2. Verify that you are in proper mode (NORMAL OPERATIONS).

a. If not in proper mode, enter NORMAL OPERATIONS mode and go through NET ACCESS and NET ADDRESS displays until you get to SETUP AND INFORMATION display. Now go to step 3.

b. If already in proper mode, go to step 3.

Step 3. Verify that data entry has been provided and is correct for all items marked with an * on SETUP AND INFORMATION display.

a. If data has not been entered, enter data now to initialize system. Now system is able to receive a mission.

b. If data has been entered for the * items and you still are unable to receive a mission, notify unit maintenance.

Table 3-1. TROUBLESHOOTING - Continued

| MALFUNCTION | TEST OR INSPECTION | CORRECTIVE ACTION |
|---|---|---|

## PDFCS - Continued

18.11 NO AUDIBLE ALERT FOR COS OR CREW (PDU POWER IS ON).

Step 1. Verify that wire/cable connections are tight.

If wire/cable connections are tight, go to step 2.

Step 2. Go to para 3-5A.6 and perform Audio Alert Test.

a. If intercom is not adjusted properly, adjust it now.

b. Rerun Audio Alert Test and go to step 3.

Step 3. If there is still no audible signal, notify unit maintenance that intercom/PDFCS is faulty.

18.12 PDU MESSAGES ARE GARBLED/YHARD TO READ.

Step 1. Verify that wire/cable connections are tight.

If wire/cable connections are tight, go to step 2.

Step 2. Go to para 3-5A.7 and perform Display Test.

a. If test indicates that some of the pixels on PDU are burned out, notify unit maintenance that PDU is faulty.

b. If test does not indicate a problem with pixels, have unit maintenance check PDFCS.

18.13 KEYPAD SOFT KEYS/ARROW KEY/KEYPAD SWITCHES, LOAD, LAY, OR STOW KEYS DO NOT RESPOND PROPERLY.

Step 1. Verify PDFCS window is active by touching or left clicking on the window area or the "PDFCS" button on the task bar. If this doesn't correct the problem, proceed to step 2.

Step 2. Verify that cable/harness connections are tight.

If wire/cable connections are tight, go to step 3.

Step 3. Go to para 3-5A.8 and perform Key and Switch Test.

a. If test indicates a fault, notify unit maintenance that PDU is faulty.

b. If no fault is indicated, notify unit maintenance to check PDFCS.

18.14 NAV SUBSYSTEM FAULT (DEGRADED MODE) IS INDICATED.

Step 1. Verify that wire/cable connections are tight.

If wire/cable connections are tight, go to step 2.

Step 2. Traverse cab left and right 90 degrees from travel lock position and verify fault has been eliminated. If not, clean slip ring segment boards (para 3-8.17) and try the VMS test again before notifying unit maintenance.

Step 3. Go to para 3-5A.2 and perform BIT Status Test.

a. Determine which subsystem is degraded. If VMS fault is indicated, go to para 3-5A.5 and perform VMS test. Notify unit maintenance of particular fault.

b. Check PDCU reconfiguration advice (Appendix G). Determine if DEGRADED mode is acceptable. (Certain degraded subsystems will not interfere with PDFCS operation or mission capability, i.e., VMS is out.) If acceptable, continue mission.

Table 3-1. TROUBLESHOOTING - Continued

| MALFUNCTION | TEST OR INSPECTION | CORRECTIVE ACTION |
|---|---|---|

## PDFCS - Continued

18.15 PDU SUBSYSTEM FAULT (DEGRADED MODE) IS INDICATED.

Step 1. Verify that wire/cable connections are tight.

If wire/cable connections are tight, go to step 2.

Step 2. Go to para 3-5A.2 and perform BIT Status Test.

a. Determine which subsystem is degraded. Notify unit maintenance of particular fault.

b. Determine if DEGRADED mode is acceptable. (Certain degraded subsystems will not interfere with PDFCS operation or mission capability; i.e., Embedded Trainer is out.) If acceptable, continue mission.

18.16 WPN SUBSYSTEM FAULT (DEGRADED MODE) IS INDICATED.

Step 1. Verify that wire/cable connections are tight.

If wire/cable connections are tight, go to step 2.

Step 2. Go to para 3-5A.2 and perform BIT Status Test.

a. Determine which subsystem is degraded. Notify unit maintenance of particular fault.

b. Check PDCU reconfiguration advice (Appendix G). Determine if DEGRADED mode is acceptable. (Certain degraded subsystems will not interfere with PDFCS operation or mission capability; i.e., Tube Temp is out.) If acceptable, continue mission.

18.17 PDCU SUBSYSTEM FAULT (DEGRADED MODE) IS INDICATED.

Step 1. Verify that wire/cable connections are tight.

If wire/cable connections are tight, go to step 2.

Step 2. Go to para 3-5A.2 and perform BIT Status Test.

a. Determine which subsystem is degraded. Notify unit maintenance of particular fault.

b. Determine if DEGRADED mode is acceptable. (Certain degraded subsystems will not interfere with PDFCS operation or mission; i.e., PDCU is out.) If acceptable, continue mission.

18.18 PCU-2 SUBSYSTEM FAULT (DEGRADED MODE) IS INDICATED.

Step 1. Verify that wire/cable connections are tight.

If wire/cable connections are tight, go to step 2.

Step 2. Go to para 3-5A.2 and perform BIT Status Test.

a. Determine which subsystem is degraded. Notify unit maintenance of particular fault.

b. Determine if DEGRADED mode is acceptable. (Certain degraded subsystems will not interfere with PDFCS operation or mission capability; i.e., PCU-2 BIT failed.) If acceptable, continue mission.

**Table 3-1. TROUBLESHOOTING - Continued**

**MALFUNCTION**

**TEST OR INSPECTION**

**CORRECTIVE ACTION**

## PDFCS - Continued

18.19 PMVS SUBSYSTEM (DEGRADED MODE) IS INDICATED.

Step 1. Verify that cable/harness connections are tight.

If wire/cable connections are tight, go to step 2.

Step 2. Go to para 3-5A.2 and perform BIT status test.

a. Determine which subsystem is degraded. Notify unit maintenance of particular fault.

b. Determine if DEGRADED mode is acceptable. (Certain degraded subsystems will not interfere with PDFCS operation or mission capability; i.e. PCU-2 BIT failed.) If acceptable, continue mission.

18.20 PDFCS POSITION DRIFTS/"DRU OP FAIL" IS INDICATED. SUBSYSTEM (DEGRADED MODE) IS INDICATED.

**NOTE**

- Infrequently, the PDFCS position has been observed to drift while the howitzer is stationary, or the "NAV OUT - DRU OP FAIL" alert message is displayed, for no apparent reason. These problems have been traced to errors in communications between the PDCU and DRUH. With the GPS receiver (PLGR/DAGR) installed and the PDFCS operated in a GPS aided mode, the problem will be bound to an acceptable level. If the PLGR/DAGR is off or not receiving acceptable signals from four satellites, the drift may occur to an unacceptable level.
- Unless there is an operational constraint on using GPS, it is recommended that the PLGR/DAGR be installed and the PDFCS be operated in the GPS aided mode.

Follow the steps below if position is drifting when the howitzer is stationary and any of the following symptoms are observed: (Note that these conditions are normal when the howitzer is travelling.)

a. "ZPT" is displayed in field 6 in the top line of the display. (Note that it takes about 30 seconds after the vehicle stops for a normal "ZPT" indication to clear.)

b. PDFCS position changes more than 10 meters.

c. The "ZUPT REQUIRED" alert message is displayed.

d. The "NAV POS UPDATE REQUESTED" alert message is displayed.

e. The "PRESS ACK WHEN TUBE STOWED" alert message is displayed when the howitzer hasn't traveled.

f. The "POS UPDATE INTERRUPTED" alert message is displayed after a NAV UPDATE is attempted.

g. The "POS UPDATE RJTD HOWITZER MOVG" alert message is displayed after a NAV UPDATE is attempted.

**Table 3-1. TROUBLESHOOTING - Continued**

| MALFUNCTION | TEST OR INSPECTION | CORRECTIVE ACTION |
|---|---|---|

## PDFCS - Continued

(Note that the “POSITION UPDATE REQUIRED” alert message can be triggered by several conditions. Unless accompanied by one of the above indications, it is not a symptom of position drift.)

If any of the position drift symptoms are observed or the “NAV OUT - DRU OP FAIL” alert message is displayed, perform the following procedure:

Step 1. Power down the PDFCS.

Step 2. Power the PDFCS back up.

Step 3. Reinitialize the PDFCS

**NOTE**

Do not replace the DRUH or PDCU for position drift or DRU OP FAIL problems. If cycling power, as discussed above, doesn’t relieve the symptoms, notify unit maintenance.

Table 3-1. TROUBLESHOOTING - Continued

| MALFUNCTION | TEST OR INSPECTION | CORRECTIVE ACTION |
|---|---|---|

## MCS

19. MCS WILL NOT OPERATE.

Step 1. Check to see if vehicle MASTER switch is ON.
If not, turn MASTER switch ON.

Step 2. Check battery generator indicator gage. Gage should be in high yellow area.
If not, notify unit maintenance.

Step 3. Check to see if MCS control switch is ON.
If not, turn ON MCS control switch.

Step 4. Check for loose electrical connections at MCS control panel.
If connections are loose, tighten them.

Step 5. If problem still exists, notify unit maintenance.

20. INSUFFICIENT AIR AT LOW OR HIGH SETTING AT ONE OR MORE CREW STATIONS.

Step 1. Check CHANGE FILTER light on MCS control panel.
If light is ON, change M48 filter.

Step 2. Check diverter valve for proper position.
If incorrectly adjusted, adjust valve.

Step 3. Check to see if quick-disconnect is properly seated in protective mask carrier.
If not, seat quick-disconnect.

Step 4. Check to see if all hose connections are secure at M3 heater.
If not, tighten connections.

Step 5. Check for obstructions at air inlet on MCS pack.
If necessary, clear inlet.

Step 6. If problem still exists, notify unit maintenance.

**Table 3-1. TROUBLESHOOTING - Continued**

**MALFUNCTION**

**TEST OR INSPECTION**

**CORRECTIVE ACTION**

## MCS - Continued

21. MCS DOES NOT PROVIDE COOL AIR AT ONE OR MORE CREW STATIONS.

Step 1. Check FREON PRESSURE light on MCS control panel.

If light is ON, see table below:

Step 2. Check to see if M3 heaters are turned OFF.

If not, turn heaters OFF.

Step 3. If problem still exists, notify unit maintenance.

| | |
|---|---|
| If the outdoor temperature is below 40°F for more than 4 hours (vehicle parked outdoors)<br>**NOTE**<br>The MCS shall not be operated in the COOL mode if the outside temperature is below 40°F. In colder weather the Freon pressure light may come on when the MASTER switch is turned ON. This is due to the reduced pressure of the Freon gas. | Bring the vehicle to above 60°F for 24 hours. If the FREON PRESSURE light remains ON, or indoor facility is not available, notify unit maintenance. If the light goes off, the MCS shall be operated normally. |
| If the outdoor temperature is above 60°F over 24 hours (vehicle parked outdoors). | Notify unit maintenance. |

22. M3 HEATERS DO NOT SUFFICIENTLY HEAT AIR AT MASK OR VEST.

Step 1. Ensure MCS control box setting is on LOW AIR.

Make sure M3 heaters are turned ON.

If not, turn heaters ON.

**NOTE**

If M3 heaters are ON, an indicator will illuminate.

Step 2. Check adjustment on M3 heater control.

If not properly adjusted, adjust M3 heater control.

Step 3. If problem still exists, notify unit maintenance.

## RADIOS

To troubleshoot radios, refer to TM 11-5830-263-10.

## COMMUNICATION WIRE

To troubleshoot communication wire, refer to TM 11-5830-263-10.

## DRIVER'S NIGHT VIEWER

To troubleshoot driver's night viewer, refer to TM 11-5855-249-10.

**Table 3-1. TROUBLESHOOTING - Continued**

**MALFUNCTION**

**TEST OR INSPECTION**

**CORRECTIVE ACTION**

## ENGINE

23. ENGINE FAILS TO CRANK OR CRANKS SLOWLY WHEN STARTER SWITCH IS ACTIVATED.

Step 1. Check to see if MASTER switch is ON.

If not, turn MASTER switch to ON position.

Step 2. Check to see if transmission lever is in “N” position.

If not, place transmission lever in the “N” position.

Step 3. Check to see if battery cables are loose, broken, or corroded.

If battery cables are loose, broken, or corroded, notify unit maintenance.

Step 4. Check to see if your battery-generator indicator gage reads in high yellow or green.

If not, notify unit maintenance.

Step 5. If engine still won’t start, notify unit maintenance.

24. ENGINE CRANKS BUT FAILS TO START.

Step 1. Check fuel gage.

Fill as necessary.

Step 2. Check to see if fuel shut-off control handle is pulled out.

Push fuel shut-off control handle in completely.

Step 3. Check for damaged fuel lines and hoses.

Check for blocked, kinked, pinched, or broken tubes, lines, and hoses. If tubes, lines, or hoses are blocked or not serviceable, notify unit maintenance.

Step 4. Drain fuel filters (para 3-7.2). Check for sediment or other evidence of contaminated fuel.

Prime fuel lines. Hold fuel primer switch ON for 45 seconds to 1 minute, then use normal start procedures.

**NOTE**

If improper fuel is suspected, notify unit maintenance.

25. ENGINE HAS LOW POWER.

Step 1. Check for water in the fuel.

Drain contamination from fuel filters (para 3-7.2).

Step 2. Check the engine air cleaners for restriction. Check air cleaner indicator.

Clean filters as necessary (para 3-7.12). Reset air cleaner indicator.

**Table 3-1. TROUBLESHOOTING - Continued**

| MALFUNCTION | TEST OR INSPECTION | CORRECTIVE ACTION |
|---|---|---|
| **ENGINE - Continued** | | |
| 26. ENGINE HAS LOW ACCELERATION. | | |
| | Step 1. | Check for fuel leaks. |
| | | Tighten lines, fittings and filters. |
| | Step 2. | Check for restrictions in air cleaner filter. Check air cleaner indicator for red sleeve. |
| | | Clean air cleaner filter (para 3-7.13). Reset air cleaner indicator. |
| | Step 3. | Check to see if accelerator pedal is bent or binding. |
| | | Notify unit maintenance if accelerator pedal is bent or binds. |
| | Step 4. | Check accelerator linkage for binding or damage. |
| | | Notify unit maintenance if accelerator linkage binds or is damaged. |
| 27. ENGINE OVERHEATS. | | |
| | Step 1. | Check engine coolant level. Check for leaks in lines. |
| | | Fill radiator as necessary (para 3-7.1.1). If leaks are visible, notify unit maintenance. |
| | Step 2. | Check engine oil level. |
| | | Fill as necessary (Appendix I). |
| | Step 3. | Check radiator cap for tight fit. |
| | | Tighten radiator cap. If damaged, notify unit maintenance. |
| | Step 4. | Check cooling fan for proper operation. |
| | | If defective, notify unit maintenance. |
| | Step 5. | Check cooling air exhaust grille for blockage. |
| | | Remove blockage if necessary. |
| | Step 6. | Check engine air cleaners for restriction. Check restriction indicator. |
| | | Clean as necessary. Reset restriction indicator. |
| | Step 7. | Check for prolonged period of idle at a low rpm. |
| | | Increase idle speed to 1000-1200 rpm (high idle). |
| 28. LOW OR NO OIL PRESSURE. | | |
| | Step 1. | Check oil level. |
| | | Fill as necessary (Appendix I). |
| | Step 2. | Check engine compartment for evidence of oil leaks. |
| | | Notify unit maintenance if leaks are present. |

Table 3-1. TROUBLESHOOTING - Continued

| MALFUNCTION / TEST OR INSPECTION | CORRECTIVE ACTION |
|---|---|
| **TRANSMISSION** | |
| 29. TRANSMISSION DOES NOT DRIVE IN ANY GEAR OR RANGE. | |
| Step 1. Check oil level. | Fill as necessary (Appendix I). |
| Step 2. Check for disconnected or broken universal joints. | Notify unit maintenance if universal joints are disconnected or broken. |
| Step 3. Check for broken or binding shift linkage. | Notify unit maintenance if shift linkage is broken or binds. |
| **STEERING** | |
| 30. VEHICLE DIFFICULT TO STEER. | Notify unit maintenance. |
| **BATTERIES/ELECTRICAL SYSTEM** | |
| 31. STARTER WILL NOT CRANK ENGINE. | Check to see if battery cables are loose, broken or corroded. If battery cables are loose, broken or corroded, notify unit maintenance. |
| 32. BATTERIES DO NOT STAY CHARGED. | |
| Step 1. Make sure voltage regulator circuit breaker is in the UP position when engine is running. | If circuit breaker light stays on, notify unit maintenance. |
| Step 2. Check for excessive use of electrical systems when engine is not running. | Turn all electrical accessories OFF when not in use. |
| Step 3. Check to see if battery cables are loose, broken, or corroded. | If battery cables are loose, broken, or corroded, notify unit maintenance. |
| 33. MASTER SWITCH LAMP DOES NOT LIGHT. | |
| Step 1. Check to see if MASTER switch is ON. | Move MASTER switch to the ON position. |
| Step 2. Check to see if bulb is burned out. | Replace bulb if necessary (para 3-7.6). |
| Step 3. Check to see if battery cables are loose, broken or corroded. | If battery cables are loose, broken, or corroded, notify unit maintenance. |

**Table 3-1. TROUBLESHOOTING - Continued**

| MALFUNCTION | TEST OR INSPECTION | CORRECTIVE ACTION |
|---|---|---|
| **TRACKS AND SUSPENSION** | | |
| 34. VEHICLE PULLS TO ONE SIDE WITH STEERING WHEEL CENTERED. | | |
| | Step 1. | Check for mud or dirt buildup on tracks. |
| | | Clean tracks as necessary. |
| | Step 2. | Check track tension. |
| | | Adjust as necessary (para 3-7.5). |
| 35. VEHICLE THROWS TRACKS. | | |
| | Step 1. | Check for loose or worn track or end connectors. |
| | | Repair or replace as necessary (para 3-7.5). |
| | Step 2. | Check for improper driving/operation of vehicle. |
| | | Modify driving/operation of vehicle. Do not make high speed turns. |
| **PERSONNEL HEATER** | | |
| 36. HEATER SMOKES OR BANGS UPON STARTING OR DOESN'T START. | | |
| | | Check to see if you are starting heater correctly. |
| | | Refer to heater starting procedures (para 2-22.1). |
| 37. HEAT OUTPUT TOO LOW. | | |
| | | Check to see if heater switch is in HI position. |
| | | Place heater switch in HI position. |
| 38. HEAT EXCHANGER LOADS UP WITH SOOT AND CARBON. | | |
| | | Check for restrictions in exhaust outlet. |
| | | Clean as necessary. |
| **PERSONNEL HEATER (GLOBAL A20)** | | |
| 38A. NO PERSONNEL HEATER OPERATION, NO FAULT LAMP OPERATION, NO DIAGNOSTIC CODE DISPLAY | | |
| | Step 1. | Check MS power connection. |
| | | Tighten connector. |
| | Step 2. | Restart heater. |
| | Step 3. | If problem still exists, notify unit maintenance (NO PERSONNEL HEATER OPERATION, NO FAULT LAMP OPERATION, NO DIAGNOSTIC CODE DISPLAY). |
| 38B. C3, VENT FAN FAULT | | |
| | Step 1. | Check for frost or obstruction in vent fan. |
| | | Remove frost or obstruction. |
| | Step 2. | Start personnel heater. |
| | Step 3. | If problem still exists, notify unit maintenance (C3, VENT FAN FAULT). |

**Table 3-1. TROUBLESHOOTING - Continued**

| MALFUNCTION / TEST OR INSPECTION | CORRECTIVE ACTION |
|---|---|
| 38C. E1, LOW VOLTAGE | |
| Step 1. | Check for loose cable connection. |
| | Tighten loose cable connection. |
| Step 2. | If problem still exists, notify unit maintenance (E1, LOW VOLTAGE). |
| 38D. E3, LOW BURNER AIR FLOW | |
| Step 1. | Check exhaust for restrictions. |
| | Remove restriction from exhaust. |
| Step 2. | Check for combustion air restriction. |
| | Remove combustion air restriction. |
| Step 3. | Restart personnel heater. If problem still exists, notify unit maintenance (E3, LOW BURNER AIR FLOW). |
| 38E. F1, IGNITION OVERTIME | |
| Step 1. | Check fuel supply. |
| | Add fuel if necessary. |
| Step 2. | Restart heater. |
| Step 3. | If problem still exists, notify unit maintenance (F1, IGNITION OVERTIME). |
| 38F. F2, BURNER FLAMEOUT | |
| Step 1. | Check fuel supply. |
| | Add fuel if necessary. |
| Step 2. | Restart heater. |
| Step 3. | If problem still exists, notify unit maintenance (F2, BURNER FLAMEOUT). |
| 38G. F3, HEAT LIMIT | |
| Step 1. | Check for obstructed heater outlet. |
| | Remove outlet obstruction. |
| Step 2. | Restart heater. |
| Step 3. | If problem still exists, notify unit maintenance (F3, HEAT LIMIT). |
| 38H. F4, VENT AIR OVERHEAT | |
| Step 1. | Check for obstructed heater output ventilation. |
| | Remove obstruction. |
| Step 2. | Restart heater. |
| Step 3. | If problem still exists, notify unit maintenance (F4, VENT AIR OVERHEAT). |

**Table 3-1. TROUBLESHOOTING - Continued**

| MALFUNCTION | TEST OR INSPECTION | CORRECTIVE ACTION |
|---|---|---|
| 38I. F6, INLET OVERHEAT, VEHICLE AMBIENT TEMPERATURE IS ABOVE 131°F (55°C) | | |
| | Step 1. | Wait until the temperature is below 131°F. F6 display code will be cancelled when vehicle temperature is below 104°F. |
| | Step 2. | Manually purge the heater three (3) times. |
| | Step 3. | Restart heater. |
| | Step 4. | If problem still exists, notify unit maintenance (F6, INLET OVERHEAT, VEHICLE AMBIENT TEMPERATURE IS ABOVE 131°F (55°C)). |
| 38J. F7, EXHAUST OVERHEAT | | |
| | Step 1. | Check for obstruction in air inlet or exhaust. |
| | Step 2. | Remove obstruction. |
| | Step 3. | Restart heater. |
| | Step 4. | If problem still exists, notify unit maintenance (F7, EXHAUST OVERHEAT). |
| **LEAD PARTICULATE FILTER AND VENTILATION SYSTEM** | | |
| 39. AIR INTAKE VENTILATION BLOWER FAILS TO OPERATE. | | |
| | | Ensure ventilation fan selection switch is in the LEAD FILTER INTAKE position. |
| | | Notify unit maintenance. |
| 40. INSUFFICIENT AIR FLOW FROM LEAD FILTER ELEMENT. | | |
| | | Notify unit maintenance to service lead filter element. |
| | | If CHANGE FILTER lamp failed to operate, change lamp (para 3-7.10). |
| 41. EXHAUST LAMP FAILS TO ILLUMINATE DURING EXHAUST VENTILATION BLOWER OPERATION. | | |
| | | Replace lamp (para 3-7.10). |
| 42. NO AIR FLOW DURING EXHAUST VENTILATION BLOWER OPERATION. | | |
| | | Ensure air duct control handle in driver's compartment is in the down position. |

Table 3-1. TROUBLESHOOTING - Continued

| MALFUNCTION | TEST OR INSPECTION | CORRECTIVE ACTION |
|---|---|---|
| **BILGE PUMP** | | |
| 43. BILGE PUMP DOES NOT OPERATE WITH BILGE PUMP SWITCH ON. | | |
| | Step 1. Check to see if MASTER switch is ON. | Move the MASTER switch to the ON position. |
| | Step 2. Check inlet for restrictions. | Clean as necessary. |
| **CAB TRAVERSING SYSTEM** | | |
| 44. CAB DOES NOT TRAVERSE FREELY UNDER HANDWHEEL OPERATION. | | |
| | Step 1. Check to see if traverse lock is released. | Release traverse lock (para 2-8.21). |
| | Step 2. Check to see if TRAVERSE MODE switch is in HANDWHEEL position. | Move TRAVERSE MODE switch to HANDWHEEL position. |
| | Step 3. Check to see if travel lock is disengaged. | Disengage if necessary. |
| | Step 4. Check to see if main drive gears are obstructed by dirt on turret ring gear. | Clean as necessary. |
| | Step 5. Check for visible obstructions. | Remove obstructions, as necessary. |
| 45. CAB CREEPS WHEN VEHICLE IS IN A CANTED POSITION. | | Notify unit maintenance. |
| 46. CAB DOES NOT TRAVERSE FREELY UNDER HYDRAULIC OPERATION USING COS AND/OR GUNNER'S CONTROL HANDLE. | | |
| | Step 1. Check that vehicle MASTER switch and HYDRAULIC POWER switch are ON. | Set MASTER switch and HYDRAULIC POWER switch ON. |
| | Step 2. Check that cab traverse lock and gun tube travel lock are released. | Unlock cab traverse lock and lower gun tube travel lock. |
| | Step 3. Check that traverse limit switch light is on. | If light is lit, make sure cab traverse is not obstructed and press traverse limit override switch while traversing cab. |
| | Step 4. Check that main hydraulic system pressure is between 1925 psi ± 50 psi. | If pressure is not 1925 psi ± 50 psi, notify unit maintenance. |
| | Step 5. Check for visible obstructions. | Remove obstructions. |

**Table 3-1. TROUBLESHOOTING - Continued**

**MALFUNCTION**

**TEST OR INSPECTION**

**CORRECTIVE ACTION**

## CANNON/BREECH

47. PRIMER FAILS TO FIRE.

**WARNING**

Failure to follow misfire procedures (para 2-19) can result in injury or death.

Step 1. Check for defective primer. If it is dented, it is defective.

Use a different primer.

Step 2. Check for defective firing pin retainer.

Replace firing pin retainer if defective.

Step 3. Check for defective firing pin.

Replace firing pin if defective (para 3-8.10).

Step 4. Check for defective firing mechanism.

Replace firing mechanism and notify unit maintenance.

48. PRIMER DOES NOT EJECT.

Step 1. Check to see if primer chamber is dirty or pitted.

Clean as necessary.

Step 2. Check to see if extractor is bent or broken.

Notify unit maintenance.

49. EXCESSIVE BLOWBACK AROUND BREECHBLOCK.

Step 1. Check to see if split rings were installed properly.

Rotate rings so that splits are 180 degrees apart.

Step 2. Check tightness of obturator nut.

Tighten obturator nut.

Step 3. Check for worn obturator pad or deformed split rings.

Remove obturator (para 3-8.9) and notify unit maintenance.

Table 3-1. TROUBLESHOOTING - Continued

| MALFUNCTION | TEST OR INSPECTION | CORRECTIVE ACTION |
|---|---|---|

## CANNON/BREECH - Continued

50. BREECH MECHANISM DOES NOT OPERATE FREELY.

Step 1. Check to see if breech ring/breechblock threads are dirty or burred.

Clean or de-burr as required.

Step 2. Check for insufficient lubrication.

Lubricate (Appendix I).

Step 3. Check outer edge of obturator spindle assembly and tube gas check seat for residue or dirt buildup.

Swab areas clean (see para 2-17c).

Step 4. Check for deformation of the split rings and condition of obturator pad.

Disassemble and inspect the obturator group (para 3-8.9). Inspect the follower assembly roller. If roller does not rotate freely, notify unit maintenance.

Step 5. Check to see if other breech mechanism components are burred, damaged or worn.

Step 6. Check breech block detent plunger.
Clean or de-burr as required.

EXAMPLE:
- Problem with the breech leaf spring pack will affect breechblock swing.
- Problem with the gear rack coil springs will affect breechblock rotation.

Notify unit maintenance.

51. GASES ACCUMULATE IN CAB DURING FIRING.

Step 1. Check to see if O-rings, nine prereservoir orifices, 10 evacuator orifices, three metering holes, nine evacuator ball valves, and ring valve are damaged, deformed or restricted.

Clean and replace as required.

Step 2. Check for broken or deformed ring valve.

Notify unit maintenance if broken or deformed.

52. BORE EVACUATOR OR MUZZLE BRAKE THRUST COLLAR BECOMES LOOSE.

Step 1. Check for loose or missing setscrew that screws ball locking device.

**NOTE**

This screw should be staked in place.

Notify unit maintenance on status of check.

Step 2. Check functioning of ball lock.

Notify unit maintenance if ball is stuck or spring appears broken.

**Table 3-1. TROUBLESHOOTING - Continued**

| MALFUNCTION | TEST OR INSPECTION | CORRECTIVE ACTION |
|---|---|---|
| **MOUNT & RECOIL MECHANISM** | | |
| 53. HOWITZER HAS JERKY OR UNEVEN RECOIL. | | |
| | Step 1. | Check for air in variable recoil hydraulic system and buffer assembly. |
| | | Bleed system and check replenisher (para 3-8.6). Fill as necessary (Appendix I). |
| | Step 2. | Check to see if cradle bearings need lubrication. |
| | | Lubricate (Appendix I). |
| | Step 3. | If problem still exists, notify unit maintenance. |
| 54. HOWITZER RETURNS TO BATTERY WITH EXCESSIVE FORCE. | | |
| | Step 1. | Follow steps 1 and 2 in previous malfunction (Howitzer has jerky or uneven recoil). |
| | Step 2. | If problem still exists, notify unit maintenance. |
| 55. INSUFFICIENT RECOIL TRAVEL. | | |
| | | Notify unit maintenance. |
| **TRAVEL LOCK** | | |
| 56. TRAVEL LOCK WILL NOT OPERATE. | | |
| | Step 1. | Check that vehicle MASTER switch is ON. |
| | | Set MASTER switch ON. |
| | Step 2. | Check that TRAVEL LOCK CONTROL switch is in proper position. |
| | | Set travel lock controls to proper position (para 2-8.19). |
| | Step 3. | Check travel lock electrical connectors for proper connection or damage. |
| | | Tighten connectors if loose. Notify unit maintenance if connectors are damaged. |
| | Step 4. | Operate travel lock manually (para 2-8.19) and notify unit maintenance. |
| **LOADER RAMMER** | | |
| 57. LOADER RAMMER FAILS TO OPERATE. | | |
| | Step 1. | Check hydraulic system pressure at fuze manifold. |
| | | If pressure is low, notify unit maintenance. |
| | Step 2. | Perform rammer operational checks (para 3-8.3). |
| | | If rammer does not pass all operational checks, notify unit maintenance. |

Table 3-1. TROUBLESHOOTING - Continued

| MALFUNCTION | TEST OR INSPECTION | CORRECTIVE ACTION |
|---|---|---|

## CANNON ELEVATING SYSTEM

58. CANNON WILL NOT ELEVATE.

Step 1. Check that travel lock is open.
Open travel lock (para 2-8.19).

Step 2. Check that HYDRAULIC POWER switch is ON.
Turn on HYDRAULIC POWER switch (para 2-8.21.4).

Step 3. Check that COS/GNR switch is in proper position.
Set COS/GNR switch to proper position (para 2-8.21.4).

Step 4. Check equilibration system (para 3-8.2).

Step 5. If problem still exists, notify unit maintenance.

## PRECISION LIGHTWEIGHT GPS (GLOBAL POSITIONING SYSTEM) RECEIVER

59. GPS WILL NOT POWER-UP.

Step 1. Check power wiring harness connector is secure to GPS J-4 connector at dome light.

Step 2. Check fuse is not blown.
Open fuse holder (para 2-22.9.3).

Step 3. Refer to TM 11-5825-291-13 for further troubleshooting the AN/PSN-11, then notify unit maintenance.

## M93 MVS (AFCS)

60. DURING AFCS INITIALIZATION: MVS WILL NOT POWER-UP.

Step 1. Check that MVS radar antenna is installed on vehicle

Step 2. If installed: Check W92 cable connections at MVS Antenna and at W93A cable.
Disconnect W92 cable connections and check for bent pins and other damage to sockets.
Reconnect W92 cable connections and re-check “POWER-UP STATUS”.
Replace W92 cable. If problem still exists notify unit maintenance.

Step3. If not installed: Check if the terminator cap is installed on W93A cable connection.
If terminator is installed while the DU is ON the AFCS will show the MVS and 1553 BUS SUBSYSTEMS as being “DEGRADED”.

61. DURING “FIRE MISSION” PROCESSING: NO MUZZLE VELOCITY VARIANCE ACQUIRED.

Step 1. Was the “COMMAND TO FIRE“ sent to AFCS, “AT MY COMMAND ONLY”?

Step 2. Did the operator set the “Muzzle Velocity Variance (MVV) Rounds” to the minimum required for the “FIRE MISSION” (FM)?

Step 3. Did the operator fire the minimum number of “good rounds” required for the FM?

Step 4. For the FM in question, does the AFCS have the same type of ammo combination and quantity required by the BCS for the FM?

Step 5. Are the extended lost codes specified for the propellant to be used in the FM?

Step 6. Was “END OF MISSION” sent to the AFCS?

Table 3-1. TROUBLESHOOTING - Continued

| MALFUNCTION / TEST OR INSPECTION | CORRECTIVE ACTION |
|---|---|

## M93 MVS (AFCS) - CONTINUED

62. MVS DECREMENTS ROUNDS PREMATURELY WHEN BREECH IS CLOSED.

When this occurs, no useful MVV data can be gathered.
Request guidance from POC regarding completion of fire mission.
Turn in MVS to unit maintenance for repair/replacement.

## PMVS (PDFCS)

63. DURING PDFCS INITIALIZATION: PMVS WILL NOT POWER-UP.

Step 1. Check that PMVS antenna is installed on vehicle.

Step 2. Check W92A cable connections at PMVS Antenna and at W93B cable.

Disconnect W92A cable connection at antenna and check for bent pins and other damage to sockets.

Reconnect W92A cable connection and re-check “POWER-UP STATUS”.

If problem still exists, notify unit maintenance.

64. DURING “FIRE MISSION” PROCESSING: NO MUZZLE VELOCITY VARIANCE ACQUIRED.

Step 1. Was the “COMMAND TO FIRE” sent to PDFCS, “AT MY COMMAND ONLY”?

Step 2. Did the operator set the “Muzzle Velocity Variance (MVV) Rounds” to the minimum required for the “FIRE MISSION” (FM)?

Step 3. Did the operator fire the minimum number of “good rounds” required for the FM?

Step 4. For the FM in question, does the PDFCS have the same type of ammo combination and quantity required by the BCS for the FM?

Step 5. Are the extended lost codes specified for the propellant to be used in the FM?

Step 6. Was “END OF MISSION” sent to the PDFCS?

65. PMVS DECREMENTS ROUNDS PREMATURELY WHEN BREECH IS CLOSED.

When this occurs, no useful MVV data can be gathered.
Request guidance from POC regarding completion of fire mission.
Turn in PMVS to unit maintenance for repair/replacement.

## Section III. MAINTENANCE PROCEDURES

## 3-7 HULL MAINTENANCE PROCEDURES.

### 3-7.1 Engine Cooling System.

3-7.1.1 Adding Coolant.

**WARNING**

- Corrosion inhibitor contains alkali. Do not get in eyes. Wear goggles/safety glasses when using. Avoid contact with skin. In case of contact, immediately wash area with soap and water. If eyes are contacted, flush eyes with large amounts of water for at least 15 minutes and get medical attention.
- NEVER remove radiator cap on an engine until it has cooled. Steam may be present. Use a rag and remove radiator cap slowly to prevent serious injury to personnel.

**NOTE**

If moving, stop vehicle, shift transmission into neutral and increase idle speed 1000-to-1200 rpms. If temperature continues to rise, shut down completely and allow engine to cool before adding coolant.

a. With engine shut down, open radiator cap access cover (1). Remove radiator cap (2).

**CAUTION**

If engine has overheated, start engine and idle before adding coolant.

b. Add coolant to top of filler neck and replace radiator cap (2).

c. Start and run engine at idle for 2 minutes to eliminate air locks; recheck coolant level and add coolant, if necessary. Close access cover (1).

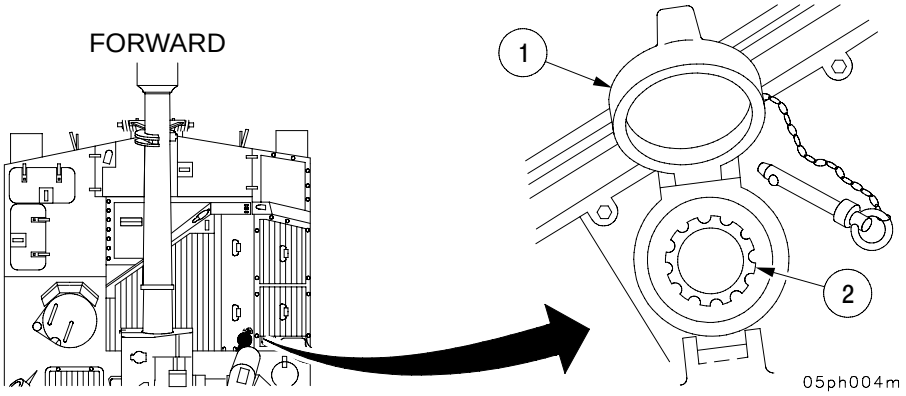

# 3-7 HULL MAINTENANCE PROCEDURES - CONTINUED

## 3-7.1 Engine Cooling System - Continued

3-7.1.2 Faulty Cooling System. If radiator is clogged or dirty, notify unit maintenance.

**NOTE**

Overheating is caused by a faulty cooling system or low coolant level. Proper maintenance of cooling system will help prevent overheating.

3-7.1.3 Draining/Refilling Cooling System.

a. Place vehicle on an incline, nose down, to facilitate coolant draining.
b. Allow engine to cool.
c. Remove access cover (1) on bottom of vehicle.
d. Using a socket wrench, remove coolant drain plug (2). Open valve (3) and drain coolant into suitable container.
e. Slowly remove radiator cap.
f. Close valve (3). Install drain plug (2) and refill with coolant.
g. Install access cover (1).

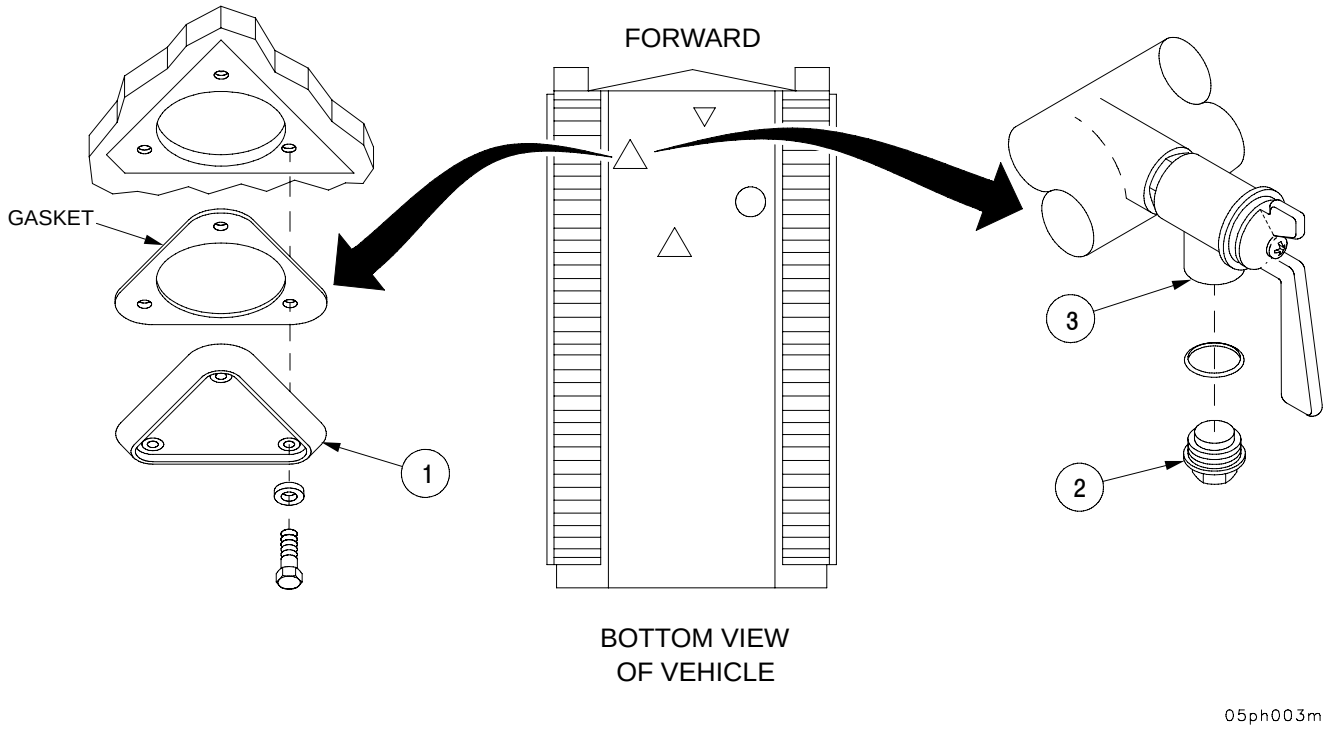

# 3-7 HULL MAINTENANCE PROCEDURES - CONTINUED

## 3-7.1 Engine Cooling System - Continued

3-7.1.4 Coolant Temperature Ranges.

| | |
|---|---|
| Below -55°F | Antifreeze (Arctic type, full strength) (item 4, Appx D) |
| +32°F to -55°F | Antifreeze (50% water mixture) (item 3, Appx D) |
| Above +32°F | Add corrosion inhibitor (item 23, Appx D) (22-1/2 oz. per vehicle) |

## 3-7.2 Servicing Fuel System.

**WARNING**

Diesel fuel is flammable. Do not smoke in vicinity while performing servicing operations, to prevent serious injury to personnel.

**NOTE**

After primary and secondary fuel filters have been drained, use fuel system air purge by turning on the FUEL PRIMER switch for 45 seconds prior to starting engine.

a. Place travel lock in maintenance position (para 2-8.19.3). Open both transmission doors.

# 3-7 HULL MAINTENANCE PROCEDURES - CONTINUED

## 3-7.2 Servicing Fuel System - Continued

b. Place container under drain cocks. Open drain cocks at primary (1) and secondary (2) fuel filters to remove water and dirt.

c. When clean fuel is visible, close drain cocks.

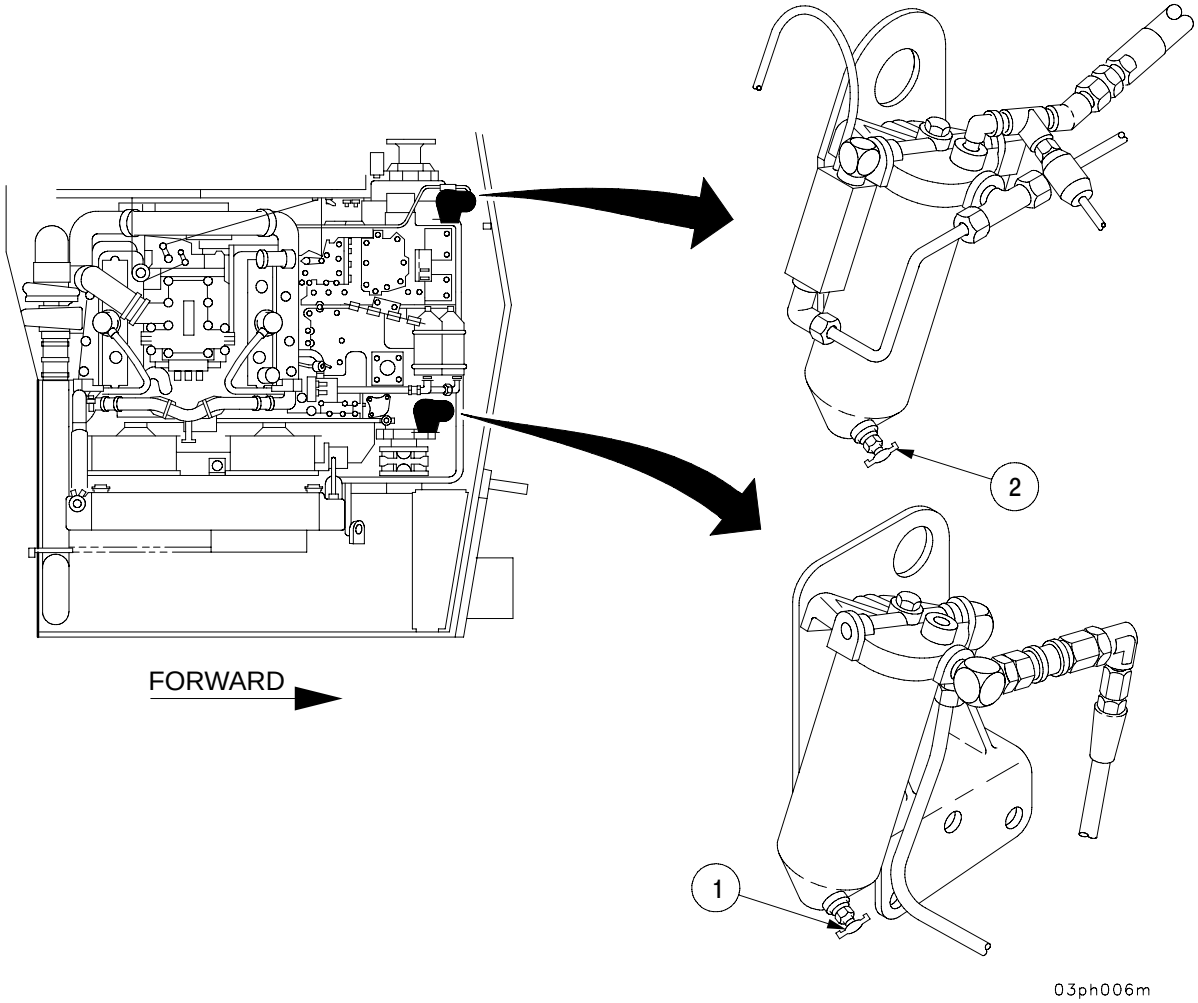


d. When necessary, remove water and dirt from fuel tanks as follows:

# 3-7 HULL MAINTENANCE PROCEDURES - CONTINUED

## 3-7.2 Servicing Fuel System - Continued

**WARNING**

Spilled diesel fuel is slippery and flammable. A fuel tank holds 133 gallons of fuel. Before draining, provide a suitable container with capacity to hold the fuel to be drained. Dispose of drained fuel in an appropriate manner.

**NOTE**

After operation, keep fuel tanks full to minimize condensation.

(1) Remove access cover (3).

(2) Using a socket head screw key, remove fuel plug (4).

(3) Drain fluid into suitable container(s) until fuel is clear.

(4) When clear fuel is visible, replace fuel plug (4).

(5) Install access cover (3).

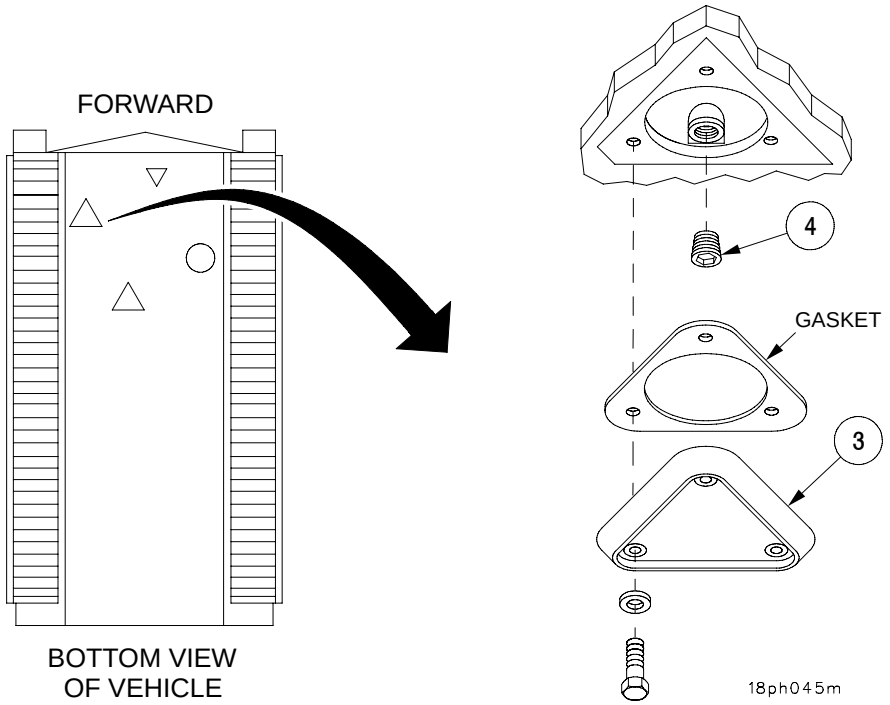

## 3-7 HULL MAINTENANCE PROCEDURES - CONTINUED

### 3-7.3 Refueling.

**WARNING**

- Diesel fuel is flammable. Do not smoke within 50 ft (15.2 m) of the vehicle while refueling to prevent serious injury to personnel.
- Use goggles and proper grounding procedures during refueling.

a. Shut off engine.
b. Before removing fuel cap, clean away debris.
c. Ground fuel hose nozzle to vehicle.
d. Remove locking pin (1), open fuel cap access cover (2) and remove fuel cap (3) slowly.
e. Fill to a level 6 inches below top of filler neck.
f. Replace fuel cap (3), close cover (2) and secure with locking pin (1).

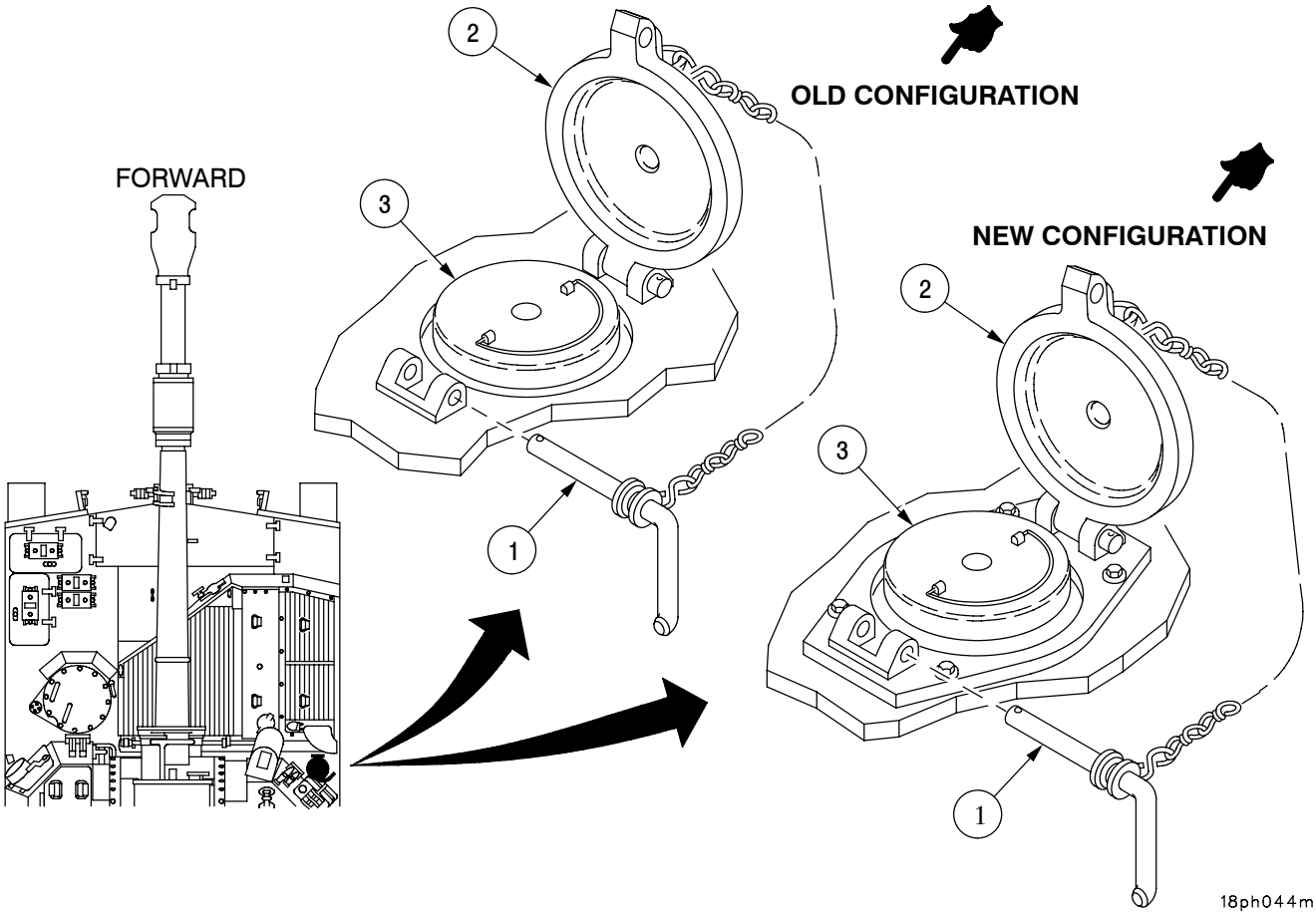

## 3-7 HULL MAINTENANCE PROCEDURES - CONTINUED

### 3-7.4 Servicing Batteries.

**WARNING**

Lead-acid battery gases can explode. Don't smoke, have open flames or make sparks around a battery, especially if caps are off. If a battery is gassing, it can explode and cause injury to you.

3-7.4.1 Loose Connections.

a. Terminal lugs should be all the way down on battery posts and tight.

b. Battery hold-downs should be tight, but not so tight as to damage battery case.

c. If bolt threads are corroded, so as to prevent a tight hold, notify unit maintenance for replacement.

d. If cables or terminal lugs are loose or broken, notify unit maintenance.

3-7.4.2 Electrolyte Level.

a. Clean off caps before removing. Do not allow dirt or foreign matter to get into battery cells.

b. Keep the vent holes in caps clear to allow gas to escape from cells.

c. Electrolyte level must not drop below the top of the battery plates. If this condition exists, notify unit maintenance.

Note:
Battery terminal covers ommitted for clarity.

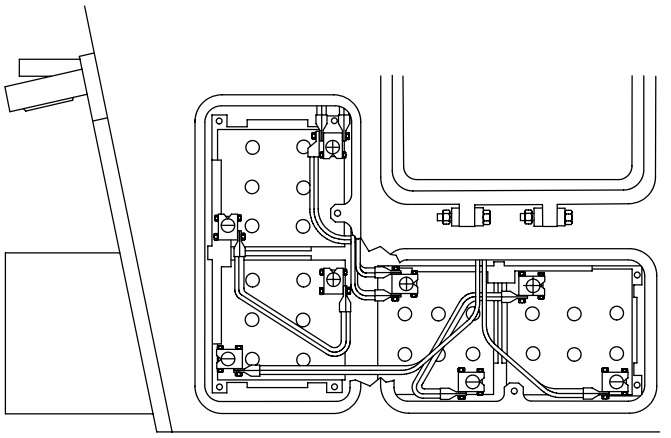

06ph011ma

# 3-7 HULL MAINTENANCE PROCEDURES - CONTINUED

## 3-7.4 Servicing Batteries - Continued

3-7.4.3 Corrosion.

**WARNING**

Battery corrosion is an acid and will eat holes in your clothing. Wash any acid off skin immediately.

a. Corrosion tends to build up on the battery posts, terminal lugs, and cables. This corrosion may damage cables and terminal lugs. If corroded, notify unit maintenance.

**NOTE**

Make sure battery caps are tight and no cracks are visible in battery case.

b. Clean top of battery with a damp cloth and wipe dry.

**CAUTION**

Complete discharge of batteries will lessen battery life and, in freezing weather, will burst battery case. Avoid running battery down.

3-7.4.4 Unserviceable Batteries. If the batteries fail, notify unit maintenance.

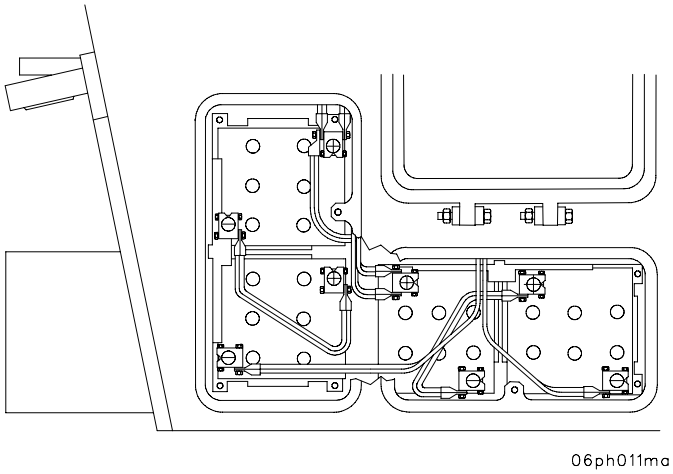

# 3-7 HULL MAINTENANCE PROCEDURES - CONTINUED

## 3-7.5 Maintenance of Track.

3-7.5.1 Checking/Adjusting Track Tension.

a. Move vehicle forward and backward several times on level ground, stopping by shifting the shift selector into neutral and coasting to a stop.

b. Check the distance from the top of third roadwheel (from drive sprocket) to the track. If distance is more or less than .25 to .38 inches, track tension needs adjustment.

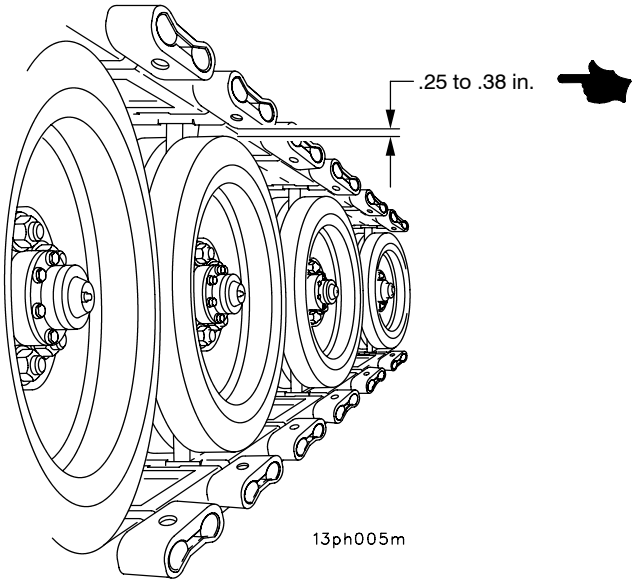

# 3-7 HULL MAINTENANCE PROCEDURES - CONTINUED

## 3-7.5 Maintenance of Track - Continued

3-7.5.2 Increase Track Tension.

**NOTE**

When track adjuster will not extend, it has reached its maximum limit of 3-1/2 inches (8.89 cm). Remove one shoe and readjust track tension.

a. Using a rag, clean grease fitting.

b. Pump grease (item 18, Appx D) into fitting (1) on track adjuster (2) until correct tension is obtained (Appendix I).

3-7.5.3 Decrease Track Tension.

**WARNING**

Lubricant is under high pressure. Loosen bleed plug slowly to avoid injury to personnel.

Open bleed plug (3) on track adjuster (2) and reduce pressure slowly until tension is released. Tighten plug and wipe away excess grease.

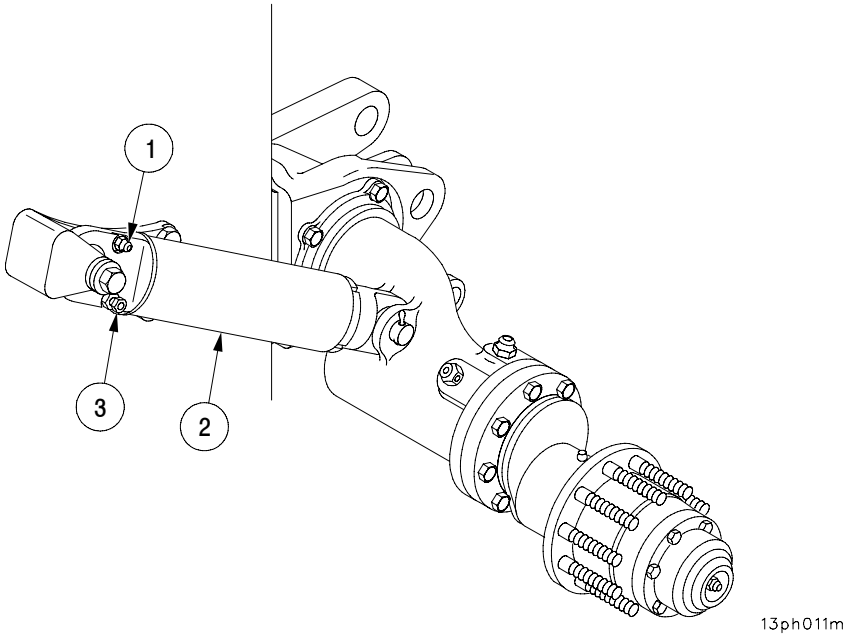

# 3-7 HULL MAINTENANCE PROCEDURES - CONTINUED

## 3-7.5 Maintenance of Track - Continued

3-7.5.4 Removing Track Shoe.

**WARNING**

Track is heavy. Before removing track-connecting fixtures, support weight of track with crowbar to lower track to ground, to prevent possible injury.

**NOTE**

Ensure vehicle is parked so track shoe to be removed is off the ground, either between the roadwheel and the idler wheel or between the drive sprocket and the front roadwheel.

a. Decrease track tension (para 3-7.5.3).

b. Remove four bolts (1) from four end connectors (2) holding track shoes to be removed.

c. Install end connector puller (3) and tighten two screws (4) against ends of track link pins (5).

d. Move four end connectors (2) out approximately 1 inch (25.4 mm), but do not remove.

e. Install two track fixtures (6) across track shoe being removed, engaging track link pins (5) on adjoining shoes.

f. Remove two end connectors (2) from track shoe with end connector puller (3).

g. Support weight of track with crowbar.

h. Remove two track fixtures (6) and lower track to ground with crowbar.

i. Remove two remaining end connectors (2) from track shoe being removed.

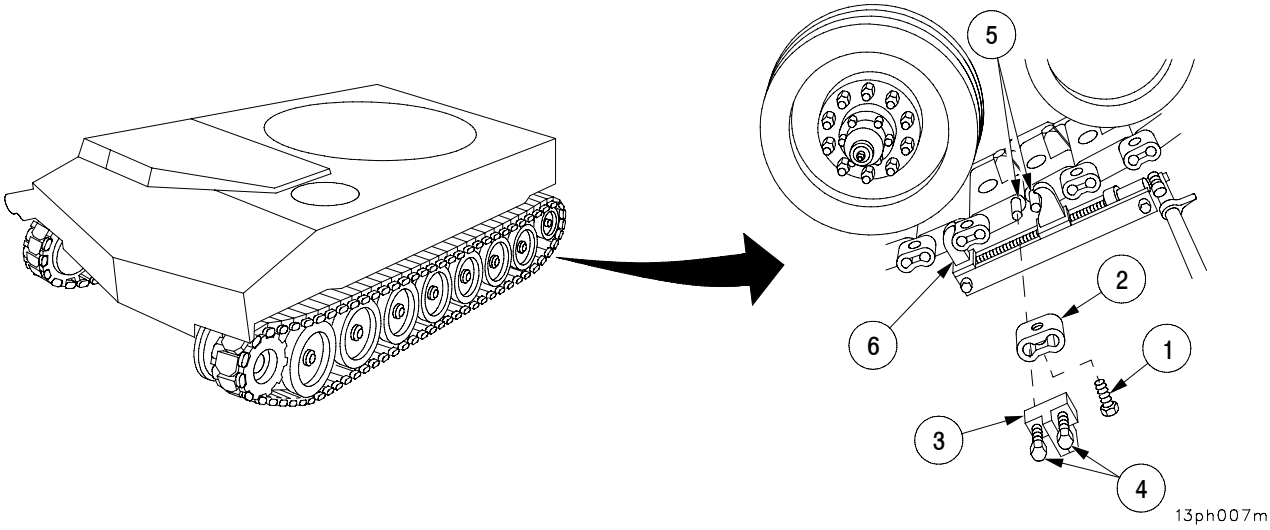

# 3-7 HULL MAINTENANCE PROCEDURES - CONTINUED

## 3-7.5 Maintenance of Track - Continued

3-7.5.5 Installing Track Shoe.

a. Position track shoe (7) on one end of disconnected track and secure with two end connectors (2).

b. Using a crowbar, raise track far enough to install two track fixtures (6).

c. Install two track fixtures (6) across track shoe being connected and tighten evenly until track link pins (5) are close enough to install two end connectors (2).

d. Connect track shoe with two end connectors (2) and remove two track fixtures (6).

e. Install two end connectors (2) on track shoe (7) by tapping with hammer until end connectors (2) are flush with track link pins (5).

**NOTE**

A lubricant is applied to end connector bolts at the manufacturer. Any end connector bolt torqued dry is incorrectly torqued (too LOW). If a bolt is removed and reinstalled, a new coating of lube must be applied. Any oil or grease is acceptable.

f. Install and tighten four bolts (1) in four end connectors (2).

g. Mark replaced end connectors (2).

h. Move track so that replaced end connector (2) is at the 12 o'clock position (top) of the idler wheel (8).

**NOTE**

Notify unit maintenance to torque replaced end connector bolts to 380-420 lb-ft (515-570 N·m) wet.

i. Adjust track tension (para 3-7.5.1).

j. Drive vehicle at a speed not to exceed 10 MPH for a short distance alternating right and left steers.

k. Stop vehicle and visually inspect the four end connectors of the replaced track shoe. If any end connectors have shifted position, reposition and torque the four end connector bolts (1) (steps g-h).

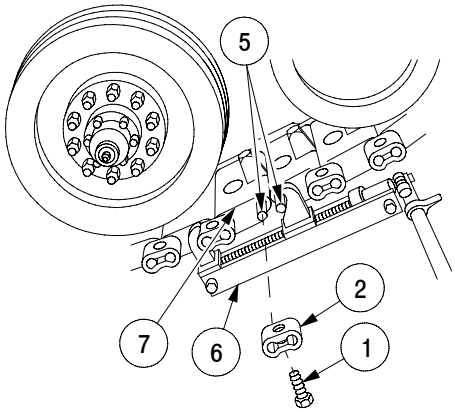


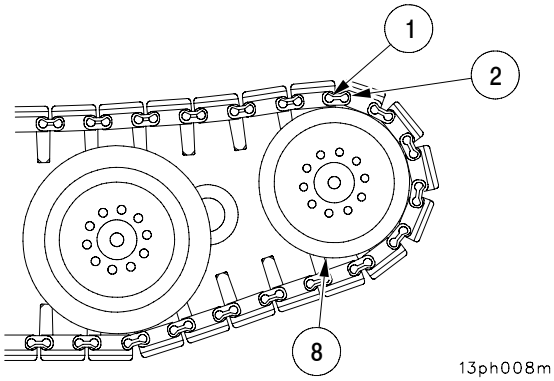

# 3-7 HULL MAINTENANCE PROCEDURES - CONTINUED

## 3-7.5 Maintenance of Track - Continued

3-7.5.6 Disconnecting Track.

**WARNING**

Track is heavy. Before removing track-connecting fixtures, support weight of track with crowbar to lower track to ground, to prevent possible injury

a. Disconnect track in same manner as replacing track shoe, but remove only two connectors opposite each other.

b. Before removing track fixtures, support weight of track with crowbar to lower track to ground.

c. To connect track, refer to para 3-7.5.8.

3-7.5.7 Installing Track.

**NOTE**

Rear fender must be in raised position to remove and install track over idler wheel.

a. Lay track out in front of vehicle in a straight line, directly ahead of and touching the first roadwheel (79 shoes per track).

b. Start engine and drive slowly onto track to a point where enough track shoes to cover idler wheel extend past centerline of last roadwheel.

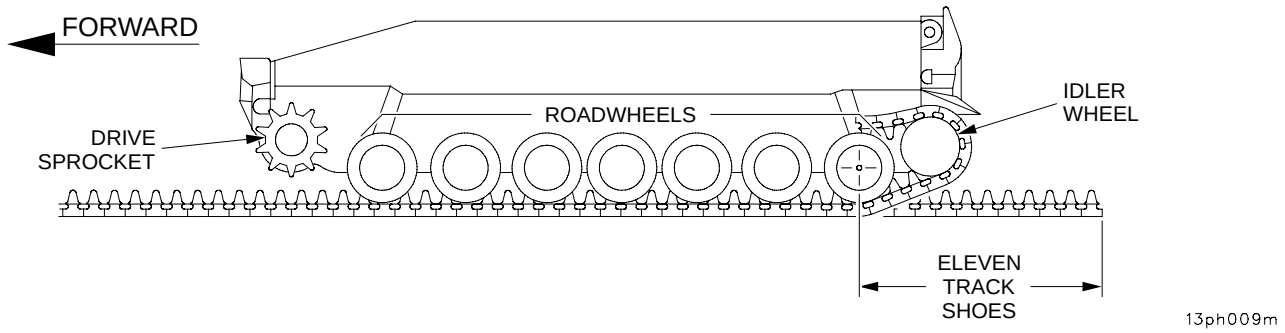


c. Stop engine; leaving parking brake off.

d. Install stop block front and rear.

e. Place an end connector on end of the track, and with the use of track fixture handle, lift end of track over idler wheel until it rests on top of last roadwheel.

f. Remove stop blocks.

# 3-7 HULL MAINTENANCE PROCEDURES - CONTINUED

## 3-7.5 Maintenance of Track - Continued

3-7.5.7 Installing Track - Continued

g. Start engine, place shift lever in forward (F-1), with steering turned in direction of removed track. Move vehicle forward slowly, allowing track to rest on roadwheels, lifting up on end of track to prevent it from getting caught between roadwheels.

h. Lay end of track on drive sprocket, turn steering wheel to opposite track and accelerate at low speed. This will clutch brake opposite track final drive, pulling track forward.

i. Stop engine when track fixtures can be connected to both ends of loose track and apply parking brake to hold sprocket in place. A crowbar may be used to pry down or up on loose track to install track fixtures. Install two fixtures over link pins one on inside and one on outside of track. Release brake. To connect track, refer to para 3-7.5.8.

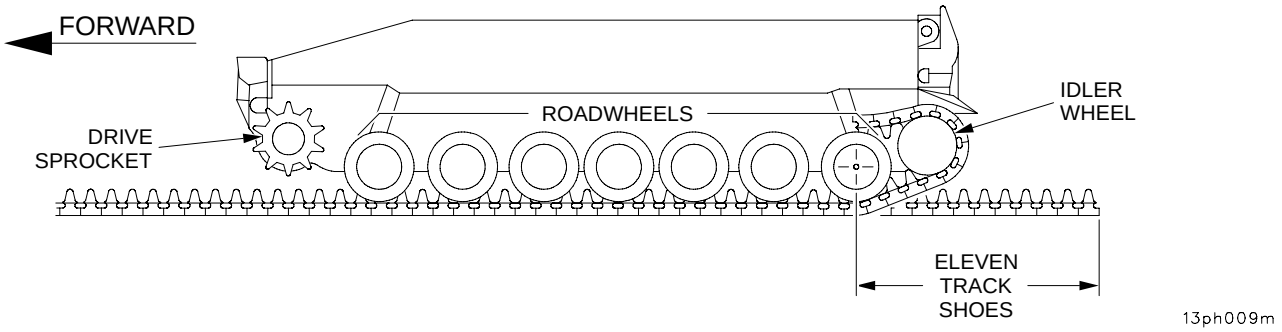

# 3-7 HULL MAINTENANCE PROCEDURES - CONTINUED

## 3-7.5 Maintenance of Track - Continued

3-7.5.8 Connecting Track.

a. Tighten track fixtures (1) evenly until link pins (2) are close enough to install end connectors (3).

b. Connect track shoe (4) with end connectors (3) and remove two track fixtures (1).

c. Reposition track fixtures (1), one at a time, and continue to tighten evenly until link pins (2) are close enough to install end connectors (3).

d. Install end connectors (3) until end connectors (3) are flush with track link pins (2) on track shoe (4) by tapping with hammer.

**NOTE**

A lubricant is applied to end connector bolts at the manufacturer. Any end connector bolt torqued dry is incorrectly torqued (too LOW). If a bolt is removed and reinstalled, a new coating of lube must be applied. Any oil or grease is acceptable.

e. Install bolts (5); tighten.

f. Mark replaced end connectors (3).

g. Move track so that marked end connectors (3) are at the 12 o'clock position (top) of idler wheel (6).

**NOTE**

Notify unit maintenance to torque bolts to 380-420 lb-ft (515-570 N·m) wet.

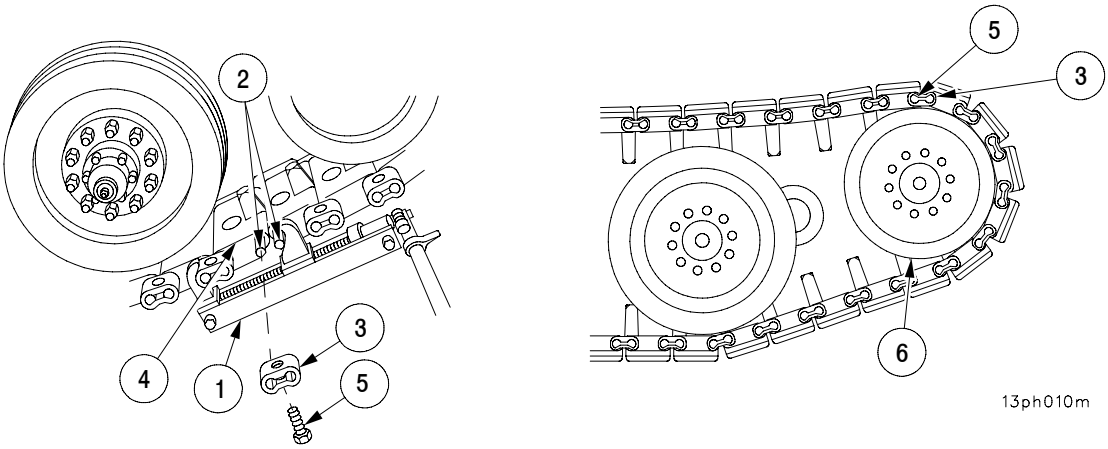


h. Adjust track tension (para 3-7.5.1).

**CAUTION**

Hard pivot steers are unacceptable and may cause a track to be thrown.

i. Drive vehicle at a speed not to exceed 10 MPH for a short distance alternating right and left steers.

j. Stop vehicle and visually inspect for any end connectors that may have shifted. If any end connectors have shifted, reposition. Tighten end connector bolts (5) (steps f-g) that have been repositioned. Notify unit maintenance to torque bolts to 380-420 lb-ft (515-570 N·m) wet.

## 3-7 HULL MAINTENANCE PROCEDURES - CONTINUED

### 3-7.6 Portable/Driver's Instrument Panel Lamp and LED Removal.

**a. Removal.**

**WARNING**

Make sure MASTER switch is OFF when working on hull electrical system to avoid electrical shocks and burns.

**NOTE**

The procedures to remove the lamps and LEDs in the driver's portable and instrument panel are identical.

1 MASTER switch is in the OFF position.

2 Unscrew lens (1). Remove lamp or LED (2) from driver's instrument panel (3) or portable instrument panel (4).

**b. Installation.**

1 Apply thorough coat of anticorrosion silicone compound (item 38, Appendix D) to the base of new lamp or LED before installing new lamp or LED.

2 Install new lamp or LED (2) and lens (1) into driver's instrument panel (3) or portable instrument panel (4).

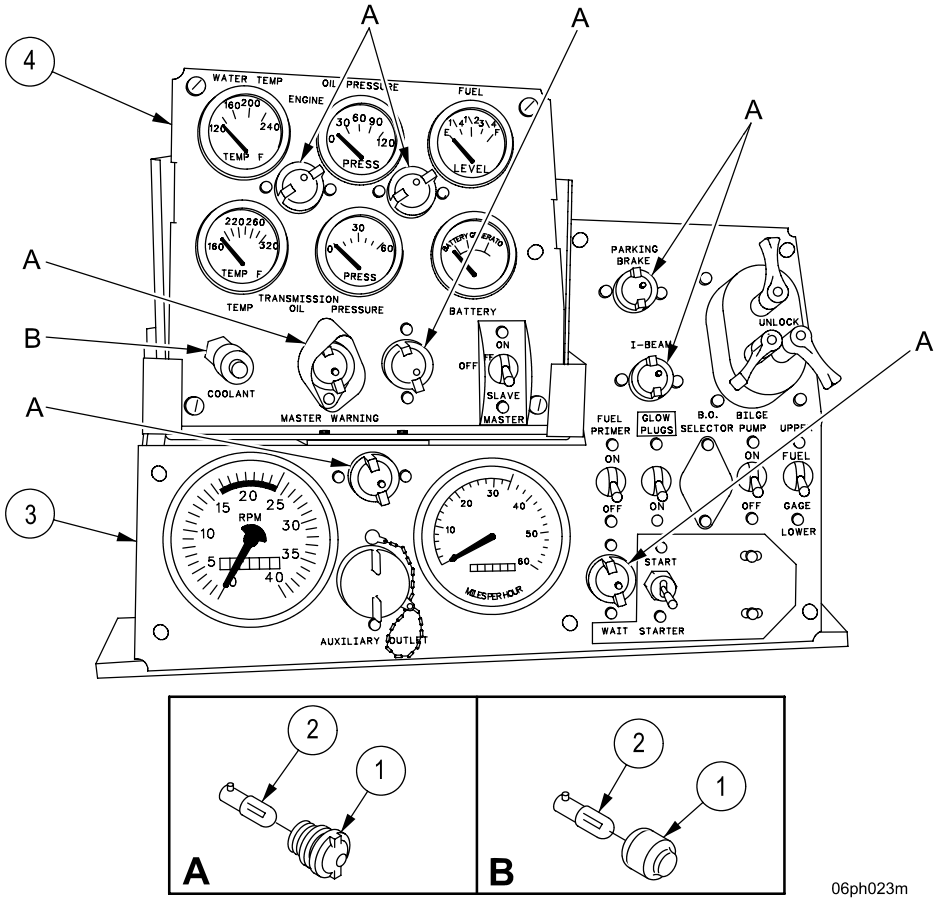


06ph023m

## 3-7 HULL MAINTENANCE PROCEDURES - CONTINUED

### 3-7.7 Control Box Assembly (Travel Lock) LED Removal.

**a. Removal.**

**WARNING**

Make sure MASTER switch is OFF when working on hull electrical system to avoid electrical shocks and burns.

1 Remove lens cap (1) from housing cover (2).

2 Pull LED (3) from lens cap (1).

**b. Installation.**

1 Apply thorough coat of anti-corrosion silicone compound (item 38, Appendix D) to the base of LED before installing new LED.

2 Install replacement LED (3) in lens cap (1).

3 Screw lens cap (1) onto housing cover (2).

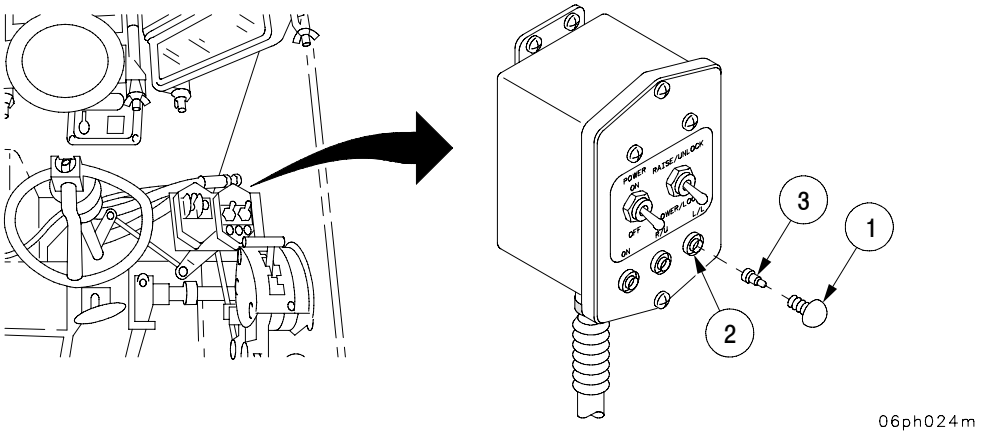

## 3-7 HULL MAINTENANCE PROCEDURES - CONTINUED

### 3-7.8 Crew Compartment Warning Light Lamp Removal.

**a. Removal.**

**WARNING**

Make sure MASTER switch is OFF when working on hull electrical system to avoid electrical shocks and burns.

1 Remove lens cap (1) from housing (2).

2 Pull LED (3) from housing (2).

**b. Installation.**

1 Apply thorough coat of anti-corrosion silicone compound (item 38, Appendix D) to the base of LED before installing new LED.

2 Install replacement LED (3) in housing (2).

3 Screw lens cap (1) onto housing (2).

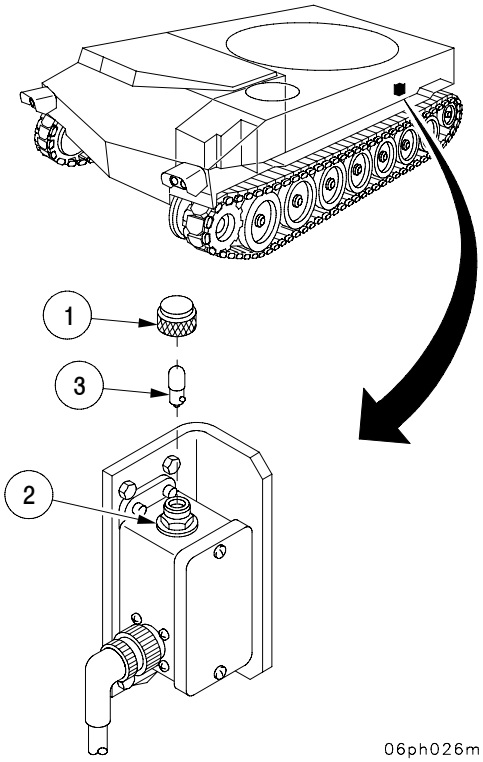

## 3-7 HULL MAINTENANCE PROCEDURES - CONTINUED

### 3-7.9 M3 Heater Pilot Light Lamp Removal.

**a. Removal.**

**WARNING**

Make sure MASTER switch is OFF when working on hull electrical system to avoid electrical shocks and burns.

1 Remove pilot light lens (1) from heater (2).

2 Separate lamp (3) from pilot light lens (1).

**b. Installation.**

1 Apply thorough coat of anti-corrosion silicone compound (item 38, Appendix D) to the base of new LED before installing new LED.

2 Install lamp (3) in pilot light lens (1).

3 Install pilot light lens (1) in heater (2).

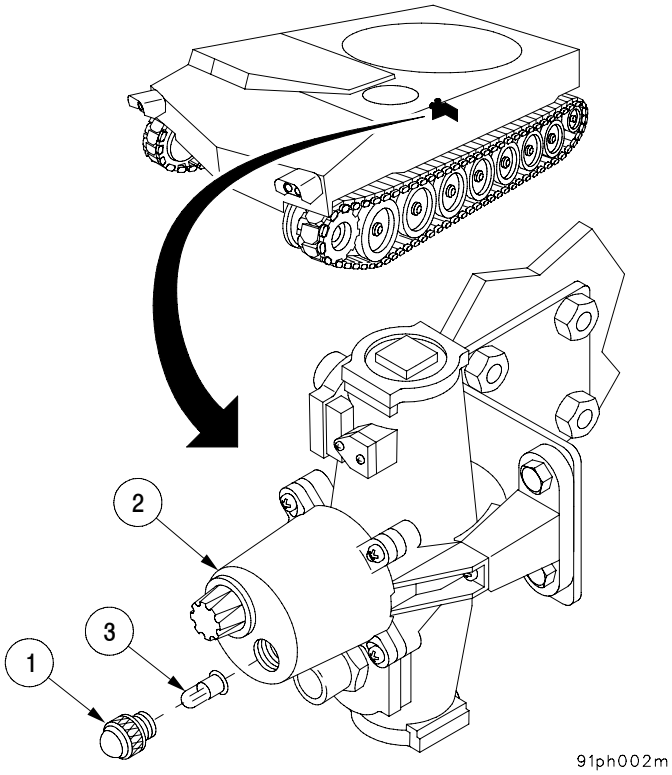

## 3-7 HULL MAINTENANCE PROCEDURES - CONTINUED

### 3-7.10 Accessory Control Box Indicator LED Removal.

**a. Removal.**

**WARNING**

Make sure MASTER switch is OFF when working on hull electrical system to avoid electrical shocks and burns.

**NOTE**

There are two different types of the accessory control boxes installed in the M109A6 vehicles. The LED removal and installation procedures are the same for both.

1 Remove lens cap (1) or lens (2) from housing (3).

2 Separate LED (4) from lens cap (1) or remove LED (5) from housing (3).

**b. Installation.**

1 Apply thorough coat of anti-corrosion silicone compound (item 38, Appendix D) to the base of new LED before installing new LED.

2 Install LED (4) in lens cap (1) or LED (5) in housing (3).

3 Install lens cap (1) or lens (2) in housing (3).

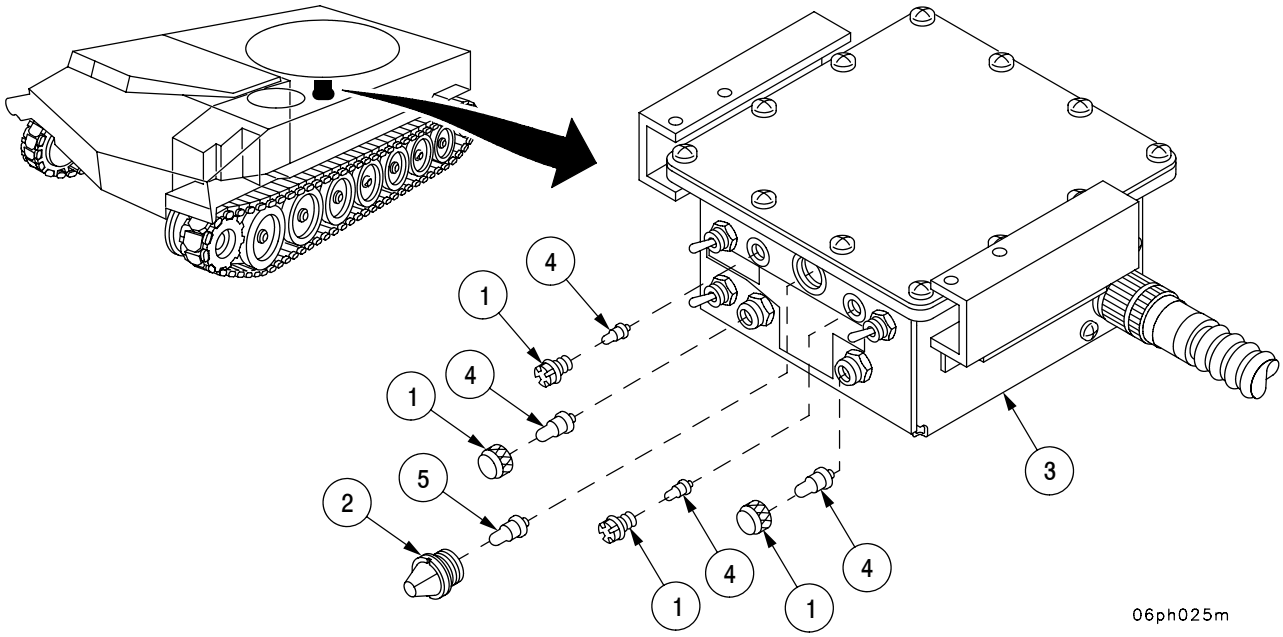

## 3-7 HULL MAINTENANCE PROCEDURES - CONTINUED

### 3-7.11 Master Warning Light Assembly Lamp Removal.

**a. Removal.**

**WARNING**

Make sure MASTER switch is OFF when working on hull electrical system to avoid electrical shocks and burns.

1 Remove lens cap (1) from housing (2).

2 Separate LED (3) from lens cap (1).

**b. Installation.**

1 Apply thorough coat of anti-corrosion silicone compound (item 38, Appendix D) to the base of new LED before installing new LED.

2 Install LED (3) in lens cap (1).

3 Install lens cap (1) in housing (2).

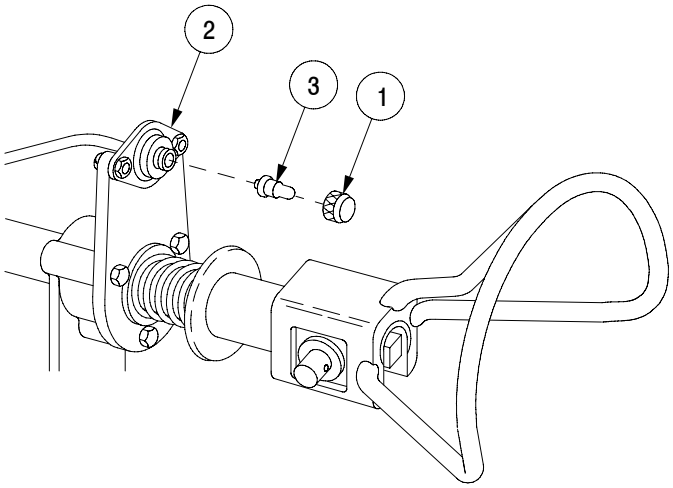


06ph027m

## 3-7 HULL MAINTENANCE PROCEDURES - CONTINUED

### 3-7.12 Winterization Heater Control Box Lamp Removal (If Equipped).

**a. Removal.**

**WARNING**

Make sure MASTER switch is OFF when working on hull electrical system to avoid electrical shocks and burns.

1 Removal lens cap (1) from housing (2).

2 Separate LED (3) from lens cap (1).

**b. Installation.**

1 Apply thorough coat of anti-corrosion silicone compound (item 38, Appendix D) to the base of new LED before installing new LED.

2 Install LED (3) in lens cap (1).

3 Install lens cap (1) in housing (2).

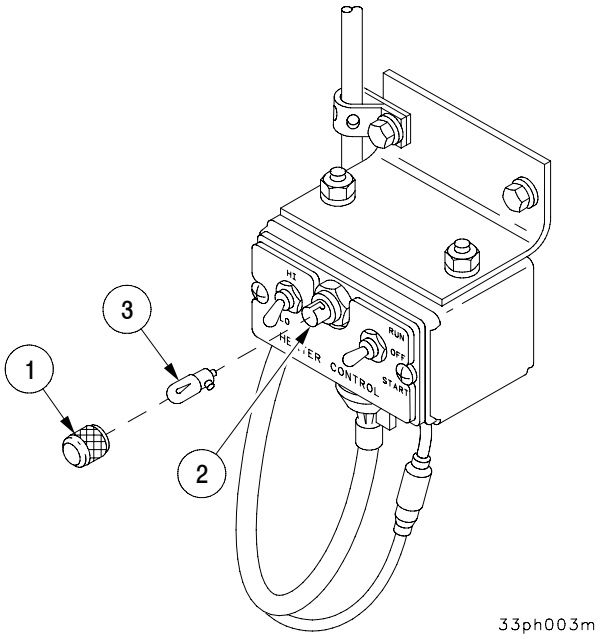

## 3-7 HULL MAINTENANCE PROCEDURES - CONTINUED

### 3-7.13 Maintenance of Air Cleaner.

**WARNING**

If NBC exposure is suspected, all filter media will be handled by personnel wearing full NBC protective equipment.

Depending on conditions, the air cleaner must be removed periodically for cleaning. Loss in engine power, an overheating engine or excessive black exhaust may indicate need for more frequent cleaning. If air cleaner indicator shows red, the air cleaner is restricted and filters must be checked.

a. Release gun tube from travel lock (para 2-8.19).

b. Release cab traverse lock and traverse cab left until notch in bottom edge of shield under azimuth tachometer is located in front of left air cleaner (para 2-8.21).

c. Shut off engine.

d. For access, remove two quick-release pins (1) and bracket (2) with three rifle stowage clips.

e. Remove right access door (3) by pulling locking latch (4) down and lifting door up.

**CAUTION**

Do not pull left door up so far as to cause binding and damage to door when removing.

f. Remove left access door (5) by pulling locking latch (6) down, pulling door up slightly, and sliding door off to right.

g. Pull locking handles (7) down. Pull OUT.

h. Pull air filters (8) out from air cleaner.

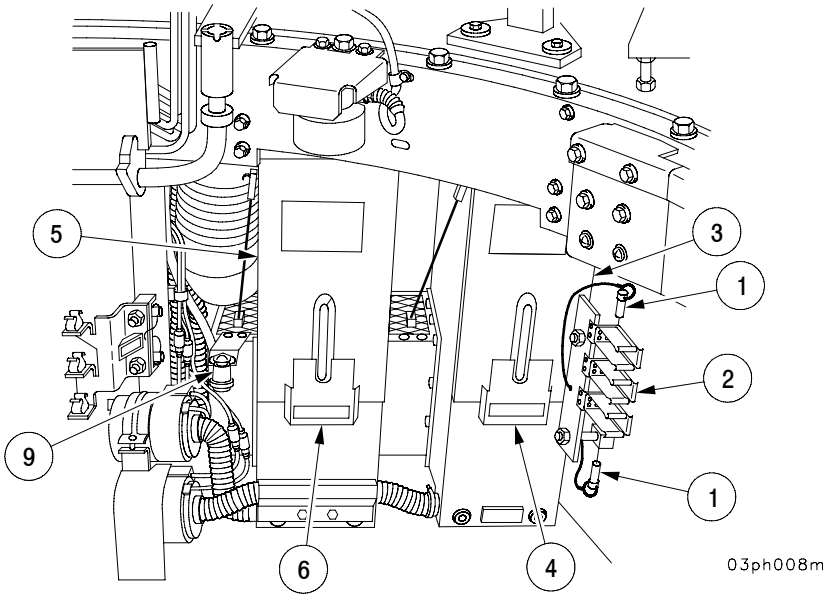

## 3-7 HULL MAINTENANCE PROCEDURES - CONTINUED

### 3-7.13 Maintenance of Air Cleaner - Continued

**WARNING**

Wear eye protection. Particles released from air filters during cleaning could injure eyes.

i. Clean air filters (8) with compressed air. (Emergency clean by tapping bottom on sides against flat surface. Do not strike open or sealing edge.)

j. Clean filter compartments.

k. Replace air filters (8), align with outlet gaskets to assure proper sealing, and secure locking handles (7).

l. Slide right and left doors (3 and 5) on air cleaner and secure doors by pulling locking latches (4 and 6) down and then up.

m. Install bracket (2) with three rifle stowage clips using two quick-release pins (1).

n. Reset air cleaner restriction indicator (9) by pushing UP on reset button (located on bottom of cylinder).

o. Start engine. If indicator (9) changes to red, notify unit maintenance.

p. Stow gun tube (para 2-8.20.2).

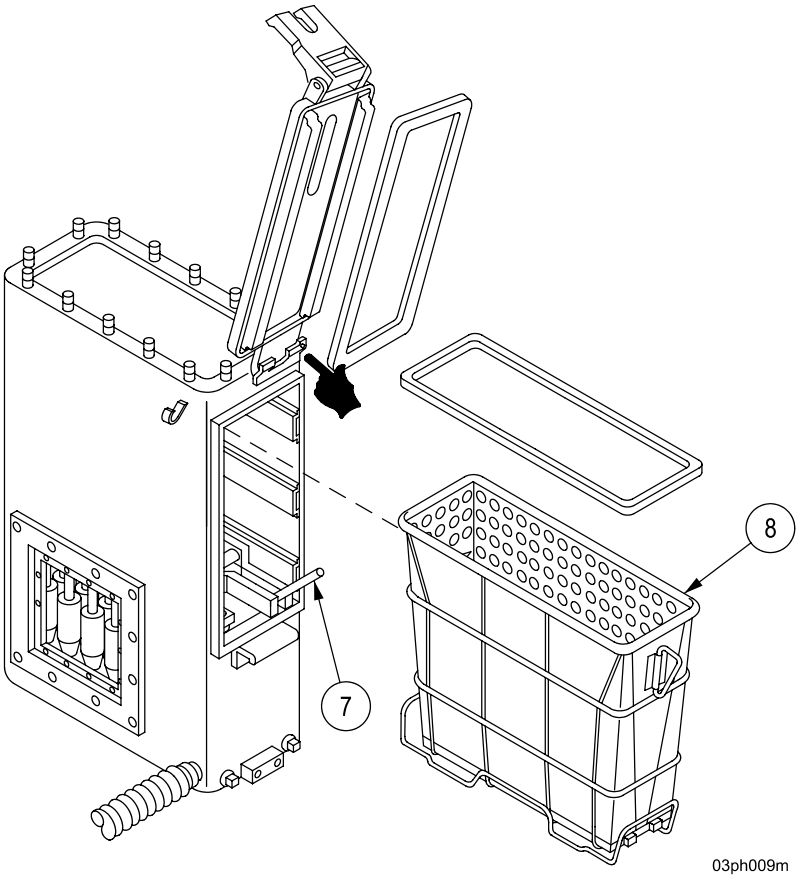

# 3-8 ARMAMENT AND CAB MAINTENANCE.

## 3-8.1 Maintenance of Sighting and Fire Control Equipment.

3-8.1.1 Inspection.

The following illustrations provide armament and cab maintenance instructions.

a. Whenever inaccuracies, maladjustments, or other conditions affecting the serviceability are evident, the equipment should be referred to unit maintenance.

b. Check instruments for completeness and appearance. Painted surfaces should be free of wear, scratches, or chipped or loose paint. All graduations, lettering, and indexes must be clear and distinct. There must not be evidence of corrosion on any part.

c. There must be no dirt, smears, stains, scratches, digs, condensation, fungus growth, chips, fractures, or cement separations visible through optics.

**WARNING**

Don't point an optical instrument directly at the sun without using a filter. The heat of focused rays may damage eyes and optical elements.

3-8.1.2 Care. Rough or careless handling can decrease the accuracy of the sighting and fire control instruments. The following points will keep your equipment in working order:

a. Don't force rotation of any knob beyond its stop limit.

b. Keep instruments as dry as possible. If wet, dry before stowing in carrying case. Condensation may collect on optical parts when temperature of parts is lower than surrounding air. Moisture can be removed by placing instruments in a warm, but not hot place. Heat can cause unequal expansion of parts, resulting in damaged optics.

**CAUTION**

- Under no circumstances should polishing liquids, pastes, or abrasives be used for polishing lenses and windows.
- For wiping optical parts, use lens paper especially intended for cleaning optical glass. Don't use silicone treated paper that is used for eyeglasses.

## 3-8 ARMAMENT AND CAB MAINTENANCE - CONTINUED

### 3-8.1 Maintenance of Sighting and Fire Control Equipment - Continued

c. Keep optical parts free of oil and grease. Don't touch lenses or windows with fingers. To remove oil or grease from optical surfaces, apply optical lens cleaning compound (item 9, Appx D). If cleaning compound is not available, and temperature is above freezing, breathe heavily upon glass and wipe off with clean lens paper (item 34, Appx D).

d. In below-freezing weather, optical surfaces should be cleaned with lens paper (item 34, Appx D) moistened with optical lens cleaning compound (item 9, Appx D). If cleaning compound is not available, use dry lens tissue. Don't breathe on lens. Wipe gently to avoid scratching or removing the lens coating. FM 9-207 contains cold-weather maintenance instructions on fire control materiel.

3-8.1.3 Instrument Lamp.

**NOTE**

MASTER power must be ON to perform the following procedure.

a. Operate switch (1) to check operation of lamps (2) on M117A2 PANTEL and M145A1 mount.

b. Check brightness of reticle lamps with rheostat (3).

c. Inspect electrical leads and connections for damage or frayed insulation. Properly connect or stow as required.

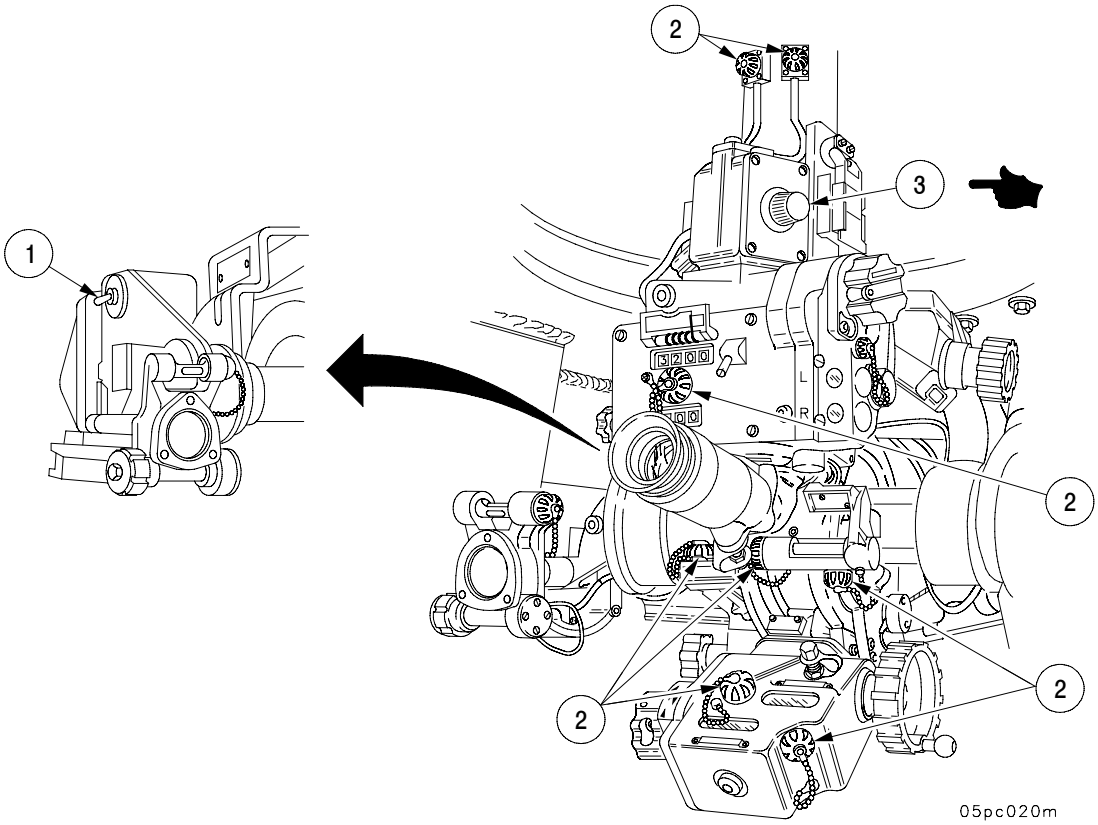

# 3-8 ARMAMENT AND CAB MAINTENANCE - CONTINUED

## 3-8.1 Maintenance of Sighting and Fire Control Equipment - Continued

3-8.1.4 M140/M140A1 Alignment Device.

**WARNING**

**RADIATION** **HAZARD**

**TRITIUM GAS (H3)**

The M140 alignment device is radioactively illuminated. Check for presence of illumination in a low light environment. If illumination is not present, notify unit maintenance or local radiation safety officer. Do not attempt to repair.

In a low light environment, check for illumination. If illumination is weak, notify unit maintenance.

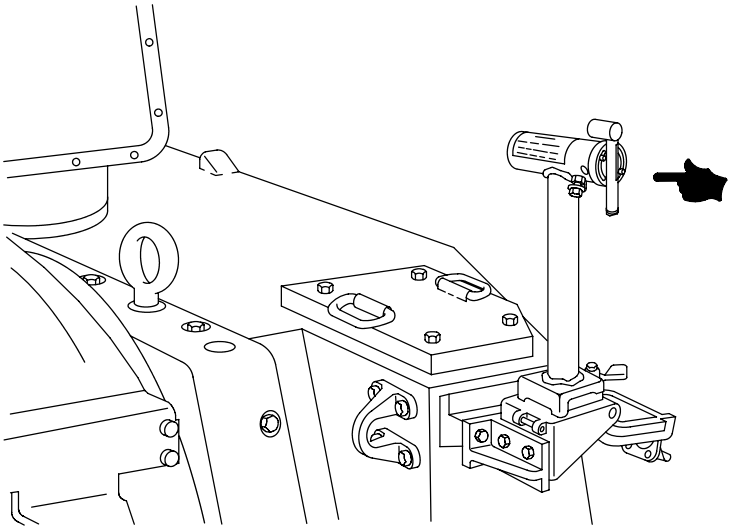

05pc021m

# 3-8 ARMAMENT AND CAB MAINTENANCE - CONTINUED

## 3-8.1 Maintenance of Sighting and Fire Control Equipment - Continued

3-8.1.5 Collimator M1A1/M1A2.

**WARNING**

**RADIATION HAZARD**

**TRITIUM GAS (H3)**

The M1A1 collimator is radioactively illuminated. Check for presence of illumination in a low light environment. If illumination is not present, notify unit maintenance or local radiation safety officer. Do not attempt to repair.

**CAUTION**

The M1A1/M1A2 collimator has an airtight seal. Breaking seal by removing any part will expose internal mechanism to moisture and may eventually impair operation of instrument.

Follow instructions on sighting and fire control for inspection and care of M1A1/M1A2 collimator (para 3-8.1.2).

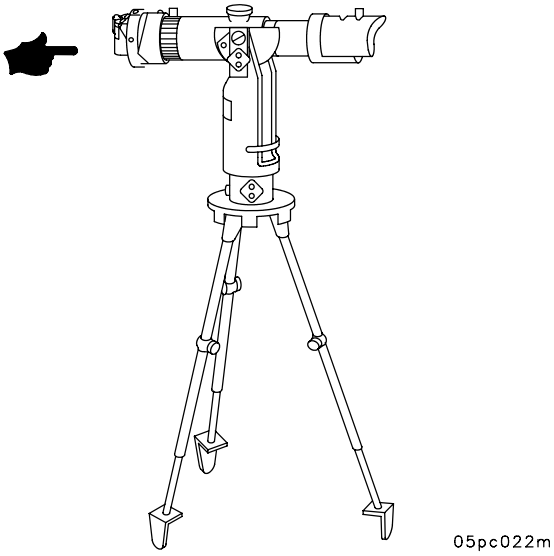

# 3-8 ARMAMENT AND CAB MAINTENANCE - CONTINUED

## 3-8.1 Maintenance of Sighting and Fire Control Equipment - Continued

3-8.1.6 Cleaning Glass on Fire Control Equipment.

**CAUTION**

- Under no circumstances should polishing liquids, pastes, or abrasives be used for polishing lenses and windows.
- For wiping optical parts, use lens paper especially intended for cleaning optical glass. Don't use silicone treated paper that is used for eyeglasses.

Using lens paper (item 34, Appx D), clean glass on eyepieces and counter windows on all fire control equipment. Clean glass on panoramic telescope ballistic cover.

## 3-8.2 Adjustment of Elevation System.

**CAUTION**

- With the MASTER switch and HYDRAULIC POWER switch ON, the equilibrator valve open (turn left), and the drain valve open (red valve), the complete hydraulic powerpack will be pumped dry, causing internal damage to hydraulic system components.
- Do not operate the system with low fluid levels.

Variations in temperatures can affect elevating or depressing of the cannon. The equilibrator, which counterbalances the weight of the cannon tube, must be adjusted if more effort is required to elevate than depress or vice-versa. Take the following steps to compensate for differences:

# 3-8 ARMAMENT AND CAB MAINTENANCE - CONTINUED

## 3-8.2 Adjustment of Elevation System - Continued

a. Using gunner's quadrant or the AFCS/PDFCS display, set cannon tube elevation at +533 mils.

b. Using the manual elevation hand pump (1), elevate and depress the cannon tube to determine if the elevate and depress efforts are equal.

c. If no difference is detected, no adjustment is required.

d. If the cannon is harder to depress than to elevate, slowly open the system drain valve (2) (red knob). Place a container under the drain tube (3) and bleed out a small quantity of hydraulic oil. Close the drain valve (2) (red knob) and recheck the gun balance (step b). Continue the process until the depress and elevation efforts are equal.

e. If the cannon is harder to elevate than depress, energize equilibration circuit. Set cannon tube elevation at +533 mils. Turn equilibrator charge valve (4) fully open, then turn back 1/2 turn. Open the equilibrator valve (5) (white knob), turn on hydraulic system power and allow system pressure to equalize (approximately 15 seconds).

f. Close equilibrator charge valve (4). Close the equilibrator valve (5). Turn hydraulic system power off. Recheck manual elevation and depression in accordance with step b.

g. If the cannon is still harder to elevate than depress, pump several strokes with the hand pump (6).

h. Recheck gun balance. Continue process until depression and elevation efforts are equal.

i. Securely close drain valve (2) (red knob), equilibrator valve (5) (white knob), and equilibrator charge valve (4).

j. Check hydraulic fluid level in powerpack. If fluid is low, replenish before operating hydraulic system.

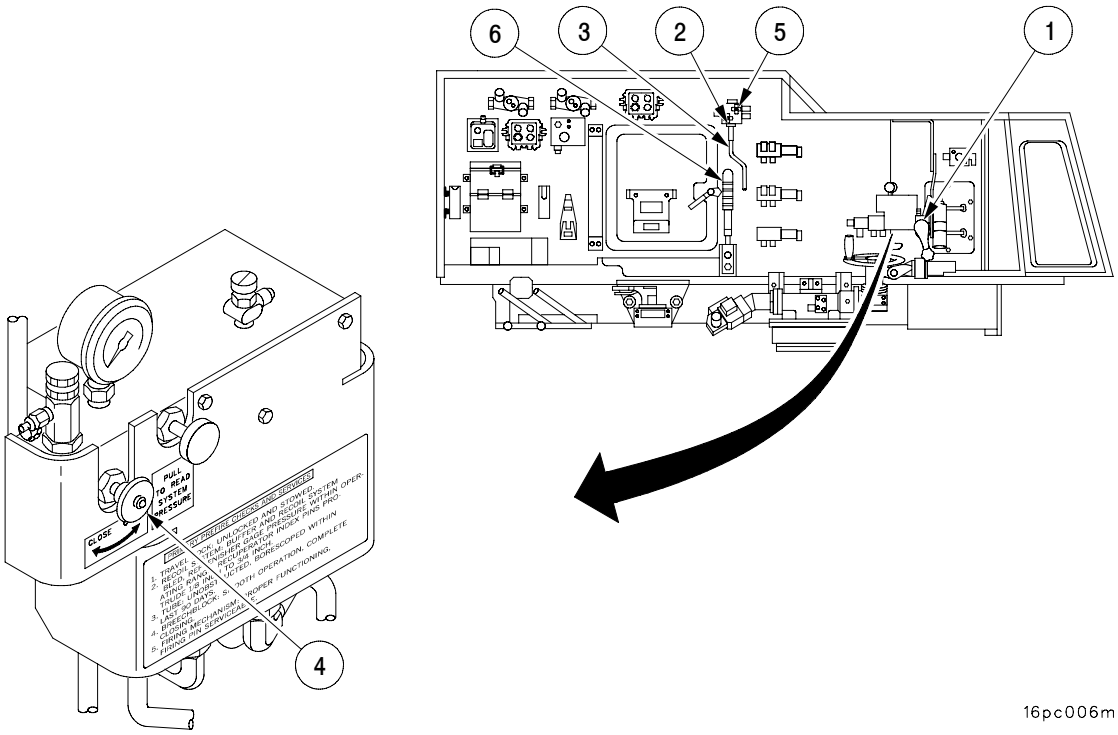

## 3-8 ARMAMENT AND CAB MAINTENANCE - CONTINUED

### 3-8.3 Rammer Operational Checks.

a. With rammer in stowed position, check to assure that rammer safety pointer (1) is in the black position.

b. Be sure that latch (2) will latch.

c. Place rammer in ram position.

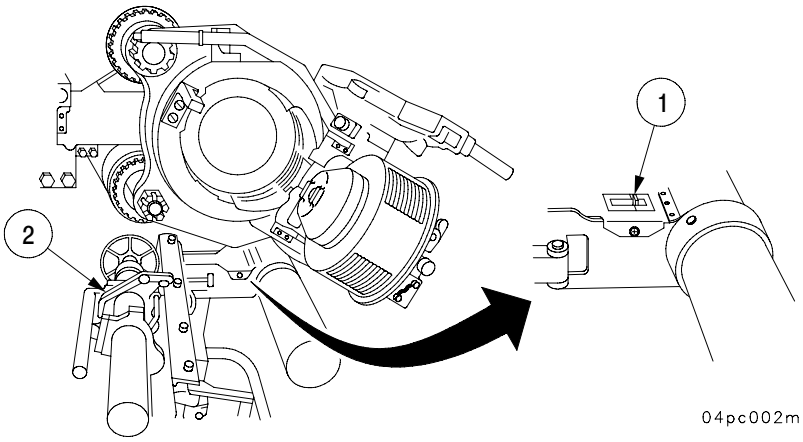


**WARNING**

When exercising rammer, bring the rammer to full extension slowly to avoid seal damage. Seal damage can cause short rounds, and short rounds fall on friendly forces, causing serious injury or death to personnel.

d. Check to assure rammer locks in ram position and plunger (3) on blocking valve (4) is depressed by cam.

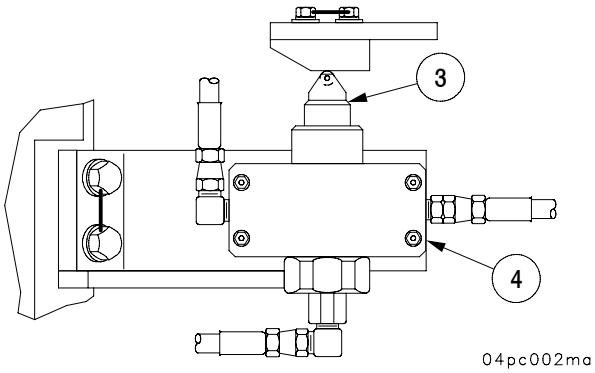

# 3-8 ARMAMENT AND CAB MAINTENANCE - CONTINUED

## 3-8.3 Rammer Operational Checks - Continued

e. Slowly depress rammer control handle (5) and hold to extend rammer full stroke. Release handle to bring rammer back to original position.

**NOTE**

If rammer fails to ram, notify unit maintenance.

f. Return rammer to stowed position.

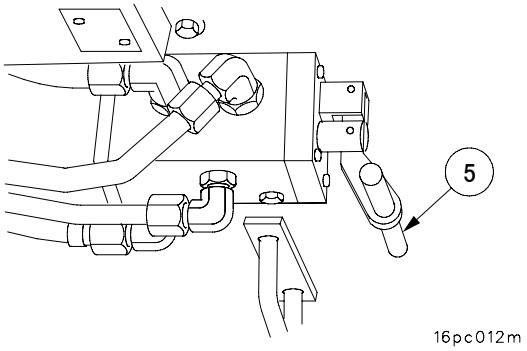


3-8.3.1 Maintenance of Rammer.

If rammer chute (1) contacts stowage bracket (2), adjust position of bracket as follows:

With rammer in stowed position, adjust four nuts (3) until rammer (1) slides freely on bracket (2).

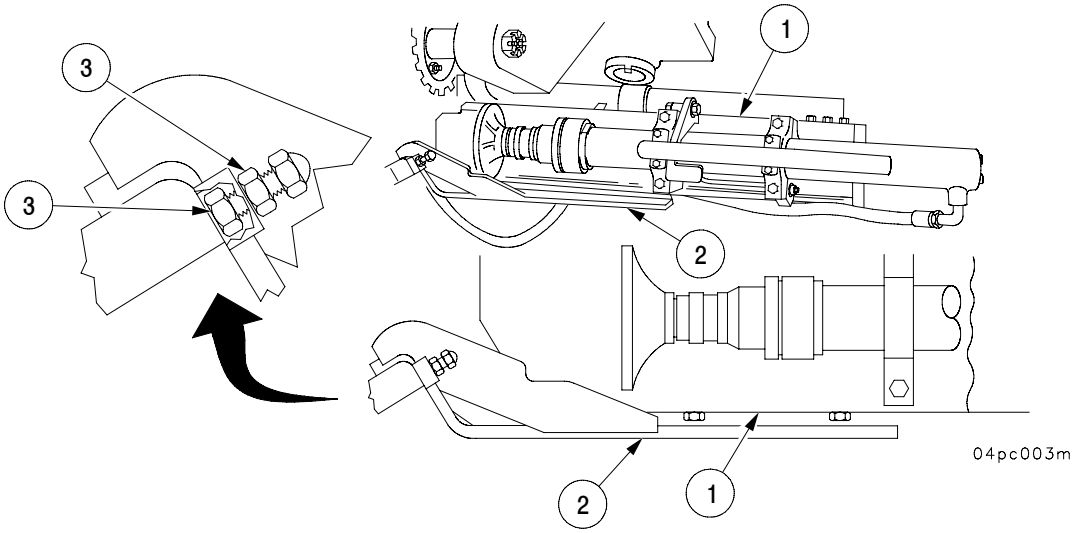

## 3-8 ARMAMENT AND CAB MAINTENANCE - CONTINUED

### 3-8.4 Zeroing Pressure.

a. Park vehicle on level ground, if possible.

b. Place gun tube in stowed position (para 2-8.20).

c. Move cab traversing lock handle to locked position (para 2-8.21).

d. Turn MASTER power ON. Start engine and idle at 1000 at 1100 rpm.

e. Place hydraulic control box HYDRAULIC POWER ON/OFF switch to ON position. Run hydraulic system approximately 3 minutes.

f. Pull valve (1) open and release.

g. Read hydraulic system pressure gage (2)

h. Place hydraulic control box HYDRAULIC POWER ON/OFF switch to OFF position.

i. Move COS control handle to left or right stop, release control handle.

j. Pull valve (1) open and release.

k. Confirm that pressure on hydraulic pressure gage (2) drops from approximately 1925 psi to 900 psi ± 50 psi.

l. Move COS control handle left or right to stop, hold for approximately 5 seconds.

m. Pull valve (1) open and release.

n. Needle will move to 0 psi.

o. If hydraulic presssure is low, use manual operation only. Notify unit maintenance.

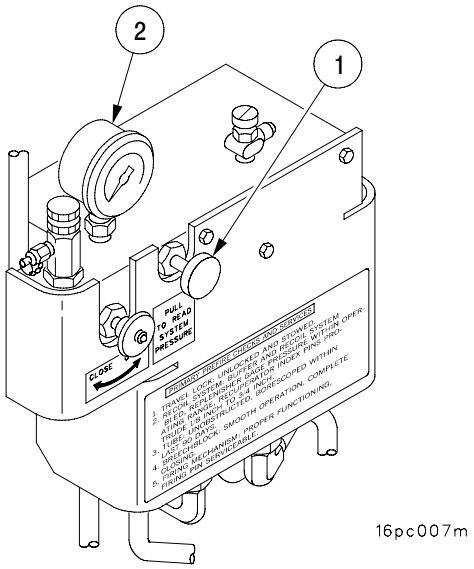


### 3-8.5 Estimating Remaining Round Life of Howitzer Tubes.

a. Howitzer tubes must be inspected and borescoped within 180 days prior to initial firing and within each 180 day interval when utilized for continuous or recurring firing.

## 3-8 ARMAMENT AND CAB MAINTENANCE - CONTINUED

### 3-8.5 Estimating Remaining Round Life of Howitzer Tubes - Continued

**WARNING**

Do not fire beyond tube life. Gun may explode causing serious injury or death to personnel.

b. The method for determining remaining life for these tubes is to convert rounds fired to Equivalent Full Charge (EFC) rounds in column "h" of DA Form Data 2408-4 Weapon Record Data. Since the condemnation criteria as listed in the table below are based on EFC rounds fired, the charge for each round fired must be entered on DA Form 2408-4 or electronic DA Form 2408-4, and the total rounds fired by charge must be carried forward to the new data card upon closeout. The electronic DA Form 2408-4 is the preferred medium for recording all firing and non-firing data for artillery tubes and can be accessed from the Army Electronic Product Support (AEPS) home page at https://aeps.ria.army.mil/aepspublic.cfm. If you are deployed or otherwise do not have access to the AEPS website, you may still complete and mail a hard copy DA Form 2408-4 to TACOM-Rock Island, ATTN: AMSTA-LC-CIPPA, Rock Island, IL 61299-6000 (Ref. DA PAM 750-8).

**NOTE**

- Condemnation of the tube is based on fatigue life (2650 EFC) or wear life, whichever occurs first. The wear life is determined from the pullover gage measurement of 6.195 at 41.75 inches from rear face of tube.
- Determine EFC factor from the table below instead of EFC factor and information maintained and displayed in AFCS (para 3-5.10) or PDFCS (para 3-5A.9)

**Condemnation Criteria for Howitzer Cannon Tube and Breech Assembly**

| EFC life of tube | EFC factor | Breech Assembly |
|---|---|---|
| 2650 EFC | Charge 8 = 1.00 (M203/M203A1)<br>Charge 5 = 1.00 (M232/M232A1)<br>Charge 4 = 0.25 (M232/M232A1)<br>Charge 3 = 0.10 (M232/M232A1)<br>Charge 7R = 0.25 (M119A1/M119A2)<br>Charge 7W = 0.15 (M4A2)<br>Charge 3-6 = 0.05 (M4A2 and M3A1)<br>Charge 2 = 0.15 (M231)<br>Charge 1 = 0.05 (M231) | Original and one retube. |

c. Notify direct support maintenance for borescoping and pullover gage measurements (TM 9-1000-202-14, Evaluation of Cannon Tubes).

d. For M284 parts replaced after 750 rounds, see table below (this is actual rounds, not EFC).

**M284 parts replaced after 750 rounds**

| Part Description | Part Number | Part Description | Part Number |
|---|---|---|---|
| Clutch | 8765139 | Extractor | 11578080 |
| Spring Pin | MS16562-133 | Spring Pin | MS171572 |
| Follower Assembly | 11580153 | Plunger (Gear Rack) | 11578346 |
| Spring Pin (Knob) | MS16562-129 | Spring | MS24585-1063 |
| Detent Plunger | 11577203 | Spring Pin (Handle) | MS39086-229 |
| Spring | 7229627 | Retaining Clip | 11580634 |
| Spring Pin | MS39086-173 | | |

**Note:** If necessary, replace above parts prior to scheduled time.

## 3-8 ARMAMENT AND CAB MAINTENANCE - CONTINUED

### 3-8.6 Servicing Replenisher.

When replenisher pressure gage (1) reading is low, add hydraulic fluid (Appendix I) to replenisher as follows:

**CAUTION**

- Make sure M3 oil gun is loaded with hydraulic fluid (item 22, Appx D) and not lubricating oil.
- Proper bleeding of air from recoil mechanism is required before firing weapon to prevent damage to breech components of cannon assembly.

**NOTE**

Replenisher pressure gage reading (before firing) should be 17-24 psi (117 to 165 kPa). Pressure may increase during normal firing due to heat expansion. Safe-to-fire range is 17-50 psi (117 to 345 kPa).

a. Place tube at zero elevation.

**NOTE**

The replenisher can be filled using M3 oil gun (step b) or using hand pump assembly (step c).

b. Fill replenisher at check/fill valve (2) using M3 oil gun until replenisher pressure gage (1) reads 17 to 24 psi (117 to 165 kPa).

c. Connect hand pump input hose to drum of hydraulic fluid (OHT) (item 22, Appx D). Connect recuperator/replenisher service hose assembly to output hose of hand pump. Connect opposite end of recuperator/replenisher hose assembly to check/fill valve (2) and fill replenisher until replenisher pressure gage (1) reads 17 to 24 psi (117 to 165 kPa).

d. Depress weapon to -50 mils; loosen right hand bleed plug (3) to bleed trapped air from rear of buffer. When air-free fluid flows, tighten plug.

e. Elevate weapon to +50 mils; loosen left hand plug (4) to bleed trapped air from front of buffer. When air-free fluid flows, tighten plug.

f. Elevate weapon to 180 mils; place container under transfer tube below ballistic shield. Remove quick-release pin (5) and open cover.

g. Open bleeder valve (6) (located on upper recoil cylinder). When air free fluid can be seen through translucent transfer tube, close valve (6).

h. Check replenisher pressure gage (1) for 17 to 24 psi (117 to 165 kPa).

i. If low, add fluid to correct operating range; if overfilled, drain.

j. Rebleed system until all air is bled from replenisher and mount. Check for fluid leaks.

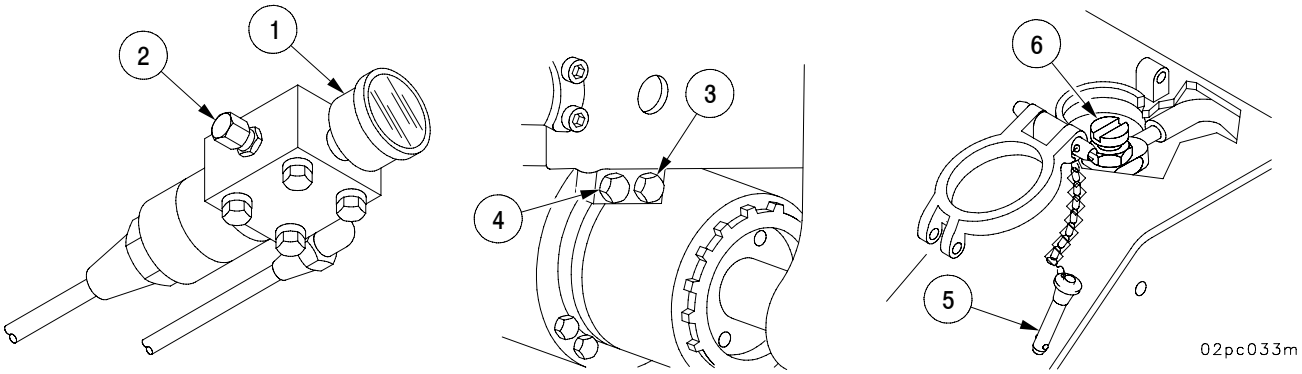

## 3-8 ARMAMENT AND CAB MAINTENANCE - CONTINUED

### 3-8.7 Removing/Installing Muzzle Brake.

**WARNING**

Muzzle brake weighs approximately 350 pounds (158.9 kg). Use caution to avoid injury to personnel.

**NOTE**

- Visually inspect muzzle brake. If any cracks exceed 1 inch (25.4 mm) in length, notify unit maintenance.
- There are two setscrews on the thrust collar. One is staked in place and should not be removed. It holds the ball lock device in place. The second is not staked. Removal of this setscrew allows access to release the ball lock.

a. Remove setscrew (1) from thrust collar (2).

b. Insert T-handle (3) into setscrew hole. Turn handle to engage with threads. Continue turning handle to depress ball and spring. If T-handle is not available, a screwdriver can be used to depress ball.

c. With ball depressed, screw thrust collar (2) rearward to uncover key (4). (Thrust collar (2) does not have to be removed unless bore evacuator is to be removed.)

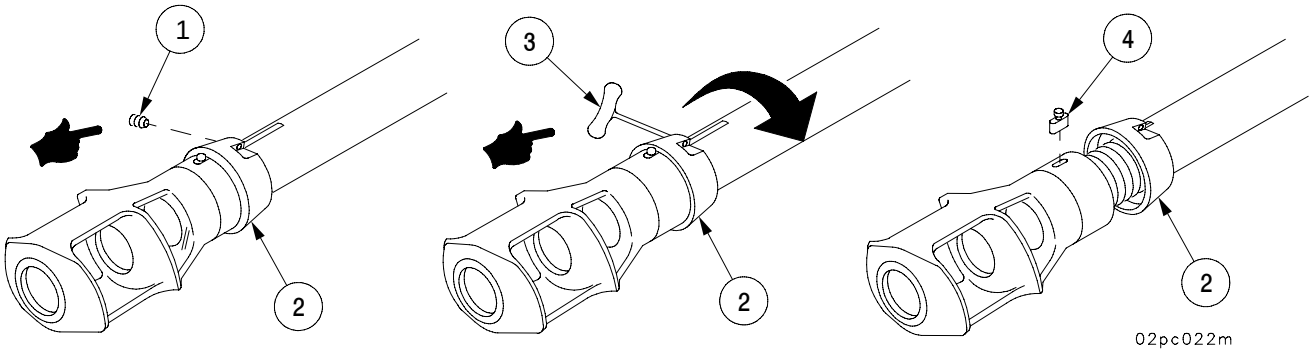

## 3-8 ARMAMENT AND CAB MAINTENANCE - CONTINUED

### 3-8.7 Removing/Installing Muzzle Brake - Continued

**WARNING**

Muzzle brake weighs approximately 350 pounds (158.9 kg). Use caution to avoid injury to personnel.

**NOTE**

If ball is stuck or spring appears broken, notify unit maintenance.

d. Remove key (4) from muzzle brake (5) and cannon tube (6).

e. Unscrew muzzle brake (5) until threads in muzzle brake (5) just clear threads on cannon tube (6). Attach sling and hoist to muzzle brake (5) and remove muzzle brake (5) from cannon tube (6).

f. Before installing muzzle brake (5), lubricate per Appendix I.

g. Using sling and hoist, raise muzzle brake (5) to cannon tube (6). Screw muzzle brake (5) on threads and align keyway in muzzle brake (5) to keyway on cannon tube (6). Insert key (4) in aligned keyways. Screw thrust collar (2) forward against muzzle brake (5), and install setscrew (1). Notify unit maintenance for torquing.

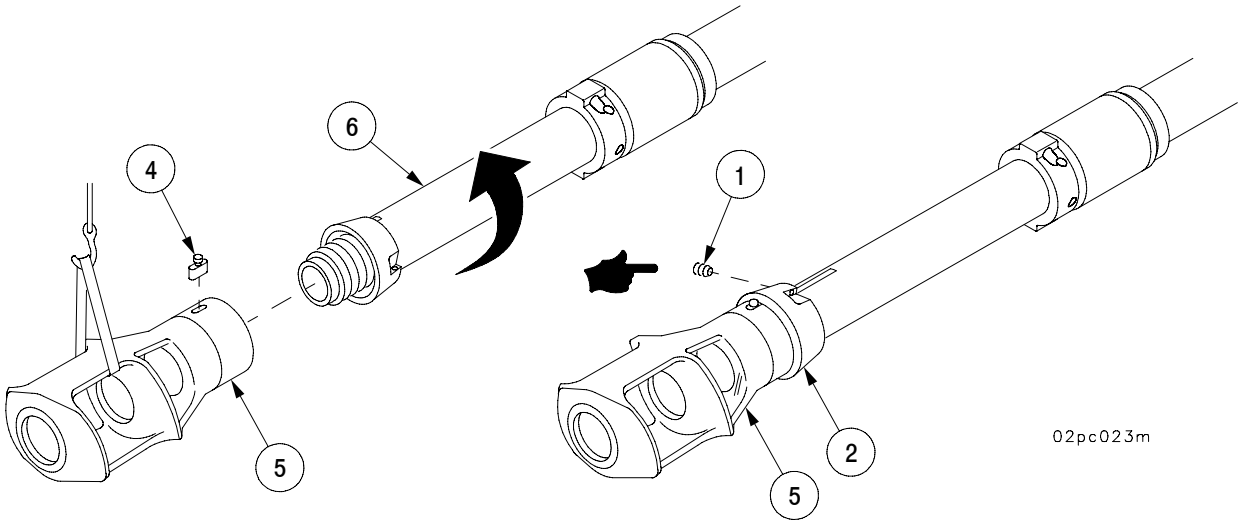

## 3-8 ARMAMENT AND CAB MAINTENANCE - CONTINUED

### 3-8.8 Removing/Installing Bore Evacuator Assembly.

a. Remove muzzle brake thrust collar (1) from cannon tube (2).

**WARNING**

- Bore evacuator assembly weights approximately 200 pounds. Use caution to avoid injury to personnel.
- Failure to maintain bore evacuator properly will expose Crew to air contaminated with carbon monoxide, producing symptoms of headache, dizziness, loss of muscular control, apparent drowsiness, and coma. Permanent brain damage and death can result from severe exposure.

**NOTE**

There are two setscrews at the muzzle end of the bore evacuator assembly. One is staked in place and should not be removed. It holds the ball lock and spring in place. The second screw is not staked. Removal of this screw will allow release of the ball lock device.

b. Remove setscrew (3) from bore evacuator thrust collar assembly (4).

**NOTE**

If ball is stuck or spring appears broken, notify unit maintenance.

c. Insert T-handle (5) into setscrew hole. Turn T-handle (5) to engage with threads. Continue turning to depress ball and spring. If T-handle is not available, a screwdriver can be used to depress ball.

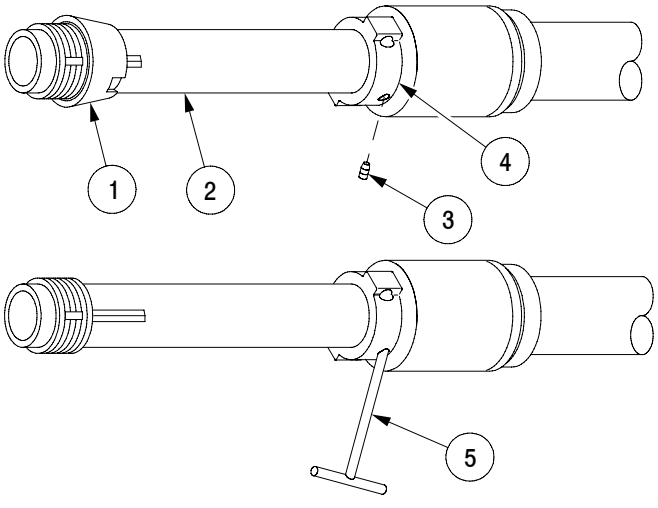

## 3-8 ARMAMENT AND CAB MAINTENANCE - CONTINUED

### 3-8.8 Removing/Installing Bore Evacuator Assembly - Continued

d. Insert pry bar (6) into hole (7) and, with ball depressed, unscrew bore evacuator thrust collar assembly (4) and remove.

**CAUTION**

- Ensure main reservoir is centered when moving over gun tube threads to prevent damage or dislodging preformed packings from grooves of reservoir.
- Significant amount of moisture might have accumulated in the main reservoir.

e. Using sling and hoist pull main reservoir (8) forward.

**NOTE**

It may be necessary to use wooden block and hammer to tap prereservoir toward muzzle brake end for removal.

f. Remove prereservoir (9).

**WARNING**

Upon visual inspection, replace ring valve or valve balls if the valve balls appear non-spherical or severely deformed or cracked, or if one or more balls are missing, or if valve ring is cracked. Failure to comply with this requirement could result in failure of the ring valve, and thus flashback. Notify unit maintenance for replacement.

**NOTE**

Use rag (item 37, Appx D) to catch nine valve balls when sliding valve ring forward.

g. Remove ring valve (10) and nine valve balls (11) from prereservoir (9).

h. Inspect O-rings (preformed packings), (12) on inner groove of main reservoir (8) and (13 and 14) on inner and outer groove of prereservoir (9) for damage or missing. Inspect for gas wash and soot past O-rings. If any of these conditions exist, notify unit maintenance for replacement of O-rings.

## 3-8 ARMAMENT AND CAB MAINTENANCE - CONTINUED

### 3-8.8 Removing/Installing Bore Evacuator Assembly - Continued

i. Before installing main reservoir (8) and prereservoir (9), thoroughly clean and lubricate inside of main reservoir (8) and prereservoir (9). Clean unpainted tube surface (2), nine evacuator ball valves (11), nine prereservoir orifices (11.1), 10 evacuator orifices (15), and three metering holes (16). Refer to Appendix I.

**CAUTION**

The prereservoir and main reservoir should be concentric with center of tube when installing to prevent disengaging O-rings (preformed packing) from groove when sliding over threads. Apply a thick coating of grease (item 18, Appx D) over threads to prevent damage to preformed packing before installing reservoirs.

j. Install prereservoir (9) on cannon tube (2).

k. Using a sling and hoist, slide main reservoir (8) onto prereservoir (9).

l. Screw bore evacuator thrust collar assembly (4) back into position.

m. Install setscrew (3). Notify unit maintenance to torque setscrew to 30-35 ft-lb (41-47 N•m).

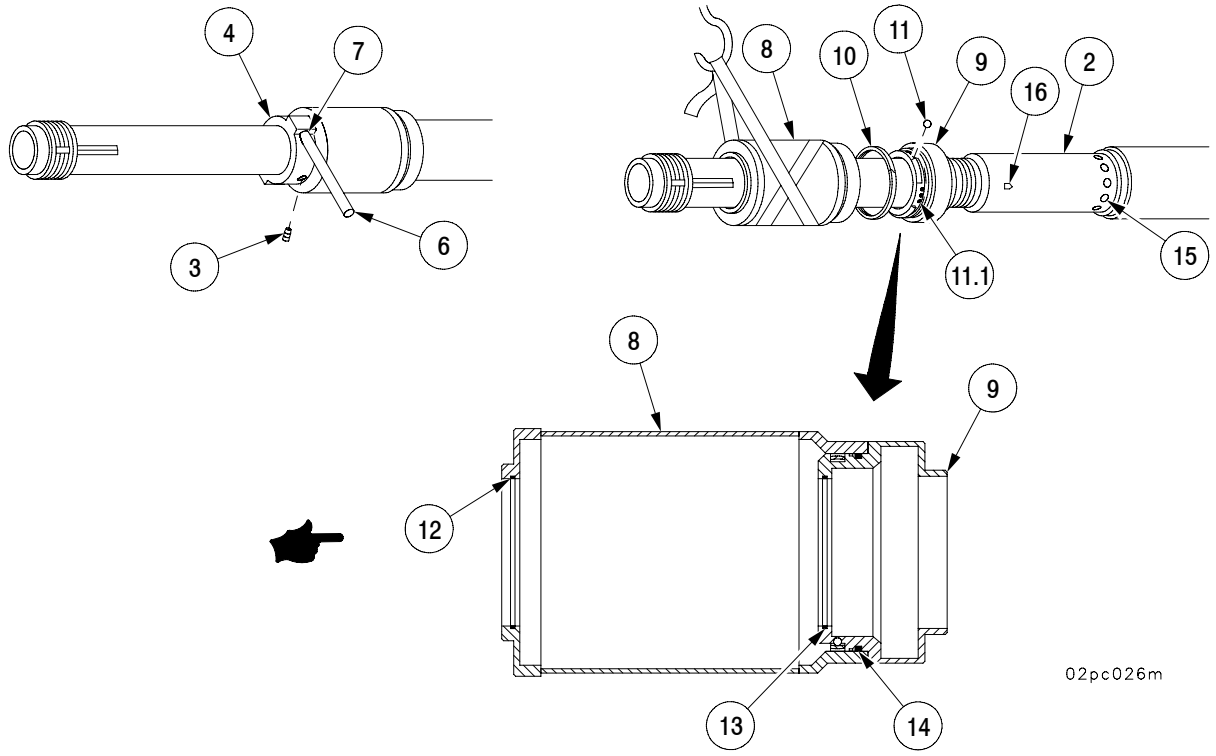

## 3-8 ARMAMENT AND CAB MAINTENANCE - CONTINUED

### 3-8.9 Disassembly of Breech Mechanism.

**WARNING**

Only remove breechblock operator rack springs when breechblock is in closed position. Springs are under heavy pressure and may cause serious injury to personnel.

a. Depress plunger (1) with punch and slide rack plate (2) rearward until rack plate disengages from plunger.

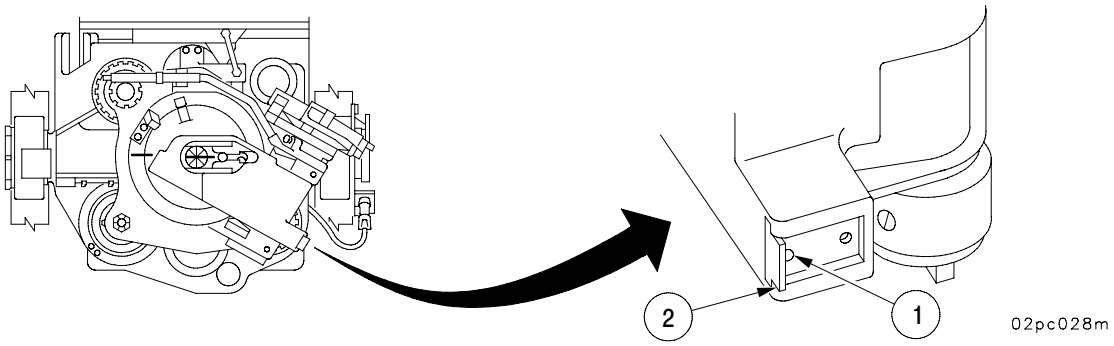


**WARNING**

When rack plate is moved rearward, stop plate and rack springs will pop out of carrier assembly. A clean rag should be held over the stop plate as rack plate is driven rearward to catch stop plate and rack springs.

b. Drive rack plate (2) rearward with hammer until plunger (1) engages in second hole in rack plate. Catch stop plate (3) and two rack springs (4) in clean rag.

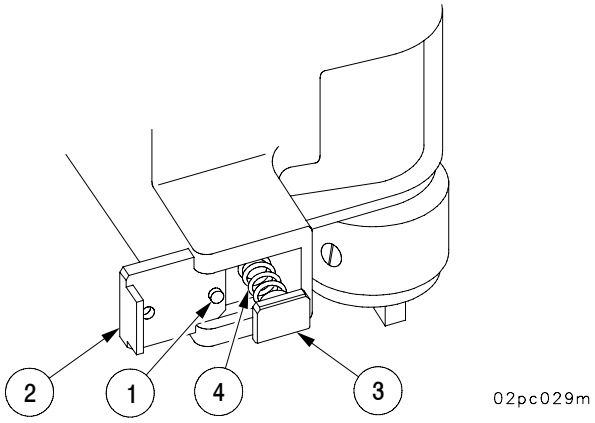

## 3-8 ARMAMENT AND CAB MAINTENANCE - CONTINUED

### 3-8.9 Disassembly of Breech Mechanism - Continued

**WARNING**

Make sure breechblock is in closed position. Springs of breechblock are under 130 lb-ft (176 N•m) load pressure. Use extreme care to avoid serious injury to personnel when removing components of the breech mechanism.

**NOTE**

Adjuster has lugs for an adjustable wrench or spanner wrench.

c. Release pre-load on closing spring. Apply clockwise pressure on adjuster (5) and depress adjuster plunger (6). Rotate adjuster slowly counterclockwise until all torque has been relieved.

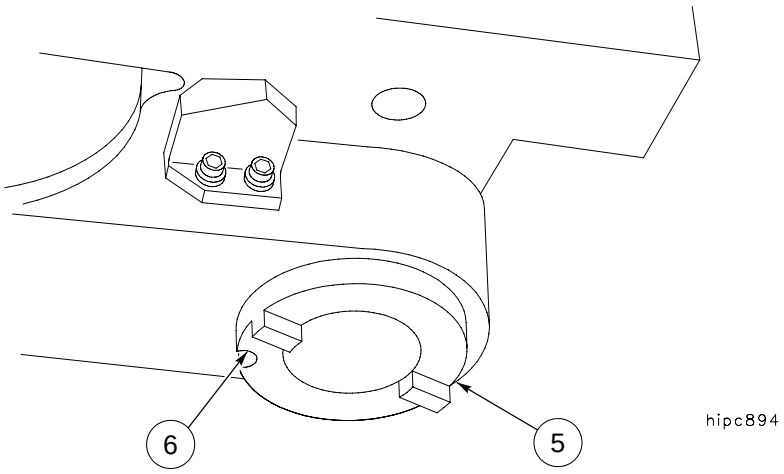

# 3-8 ARMAMENT AND CAB MAINTENANCE - CONTINUED

## 3-8.9 Disassembly of Breech Mechanism - Continued

### NOTE

Elevate cannon to 175 mils for accessability.

d. Loosen jamnut (7) of cam damper assembly (8).

e. Loosen screw (9) until tension on cam damper assembly (8) has been released.

f. Remove screw (9), jamnut (7), and cam damper assembly (8) from breech mechanism operating cam (10).

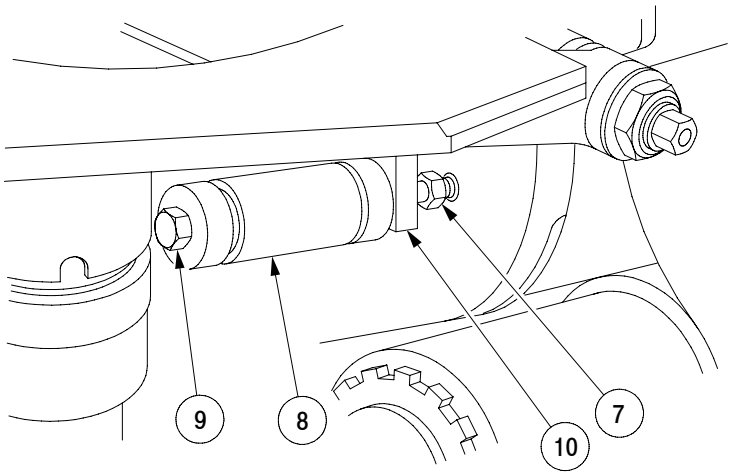


02pc035m

g. Raise breech mechanism operating cam (10) and secure it to cab roof with strap.

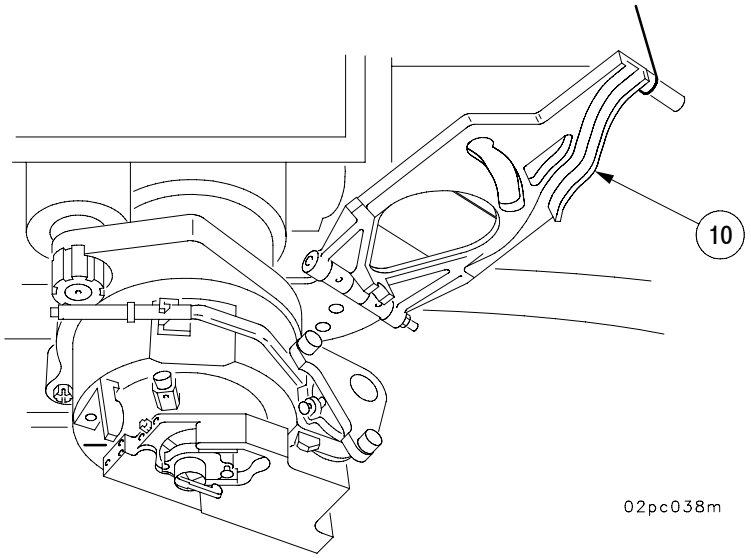


02pc038m

# 3-8 ARMAMENT AND CAB MAINTENANCE - CONTINUED

## 3-8.9 Disassembly of Breech Mechanism - Continued

**CAUTION**

A damaged retainer may “pop out” of its slot when firing the M203 charge and wedge itself between the firing mechanism and the cavity in the firing block. This will prevent the firing mechanism from being removed (pushed in and rotated for disengagement). If this condition exists, notify unit maintenance.

h. Move firing block assembly (11) to center position. Push firing mechanism (12) into firing block assembly (11) and rotate clockwise to remove.

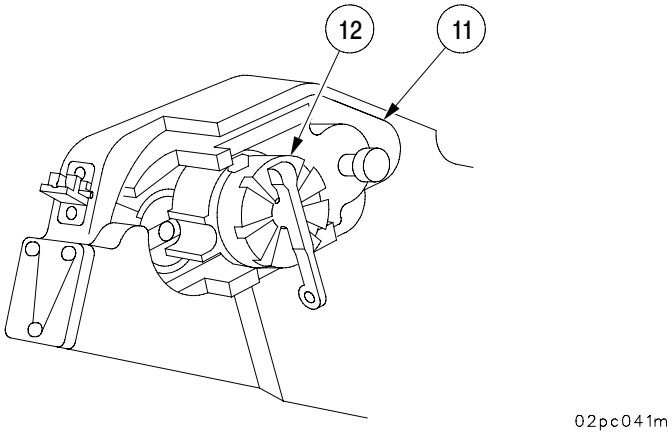

# 3-8 ARMAMENT AND CAB MAINTENANCE - CONTINUED

## 3-8.9 Disassembly of Breech Mechanism - Continued

**CAUTION**

Since all spring tension has been released, be extra careful when opening breechblock. Use operating handle and support breechblock as it is being opened. Otherwise, carrier will slam open and may be damaged.

i. With one soldier supporting breechblock (14) use breech operating handle (13) to open breechblock (14).

j. Return breech operating handle (13) to stop (15).

k. Depress carrier detent plunger (16) with drive punch and rotate breechblock (14) counterclockwise to the UNLOCK position.

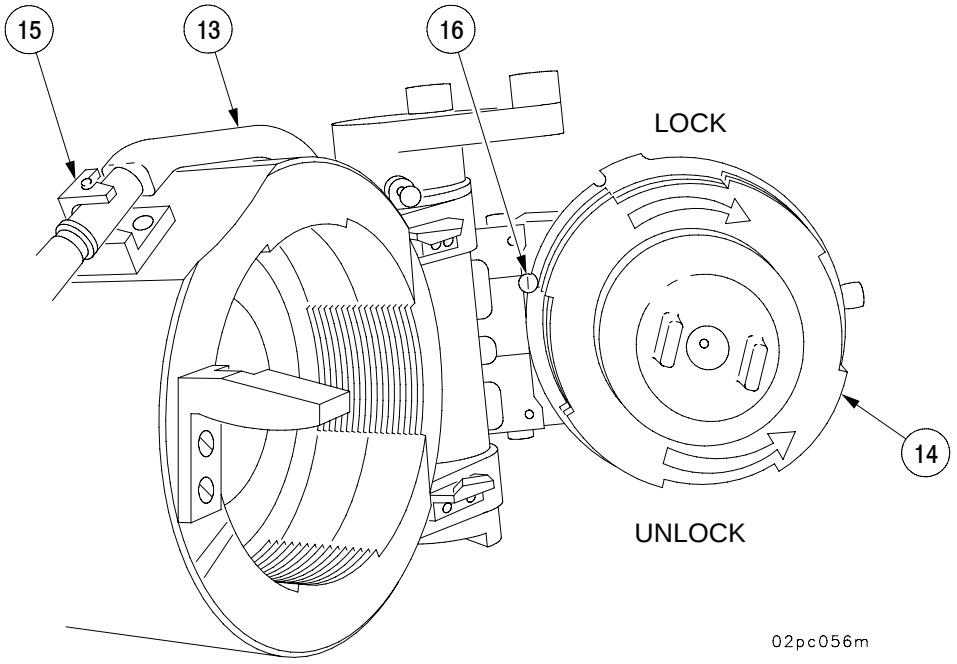

# 3-8 ARMAMENT AND CAB MAINTENANCE - CONTINUED

## 3-8.9 Disassembly of Breech Mechanism - Continued

### NOTE

- When plunger is pulled out and locked in position B, the obturator nut and spindle assembly can be removed. If the firing block assembly and housing are being removed, move plunger assembly to position C.
- If plunger cannot be easily pulled out, a screw driver or pry tool can be inserted between plunger tip and spindle nut. Applying leverage will free plunger.

l. Move pin (17), located on top of plunger assembly (18) against spring (19), from position A to position B. The pin, in position B, now allows for removal of the spindle nut. Once the spindle nut is removed, the obturator group can be inspected and removed if necessary. This position will allow for removal of the obturator group without the firing housing and firing block detachment.

m. In order to remove the firing mechanism housing and firing mechanism block, move the pin (17) to position C. The plunger shaft (20) is now clear of the firing mechanism housing which will facilitate the firing train's (firing mechanism housing and firing mechanism block) removal. NOTE: Position C allows for removal of both the obturator group and firing train (firing mechanism housing and firing mechanism block).

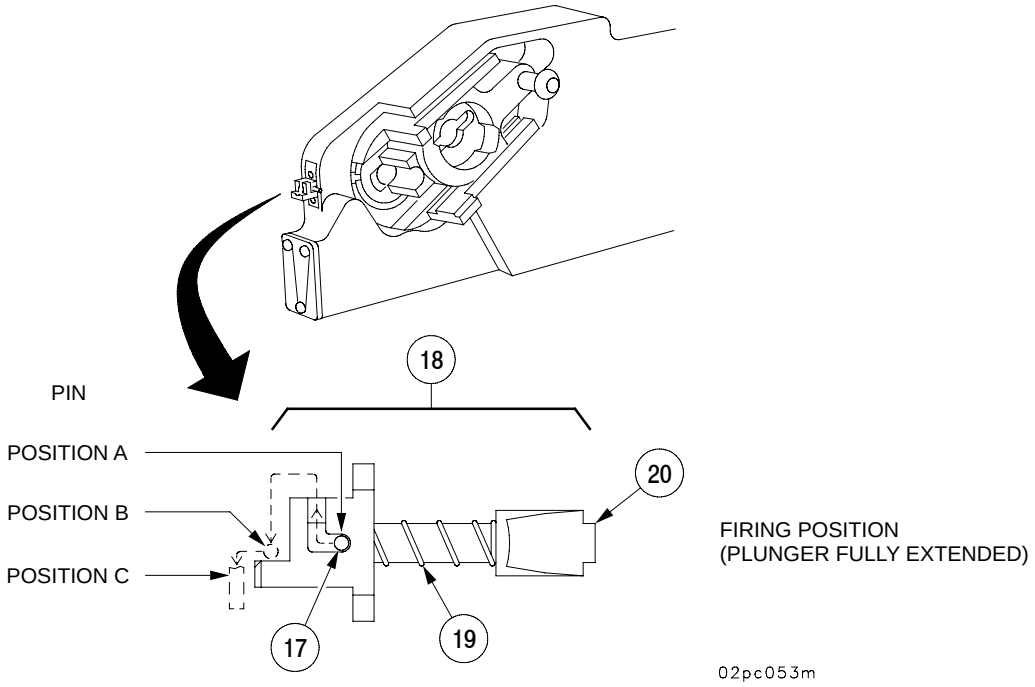

# 3-8 ARMAMENT AND CAB MAINTENANCE - CONTINUED

## 3-8.9 Disassembly of Breech Mechanism - Continued

n. Pull out on follower knob (21) and slide firing block assembly (11) to extreme right position.

o. Support firing block assembly (11) and firing mechanism housing (22) while removing obturator nut (23) with spanner wrench.

p. Remove firing block assembly (11), firing mechanism housing (22) and obturator spindle spring (24).

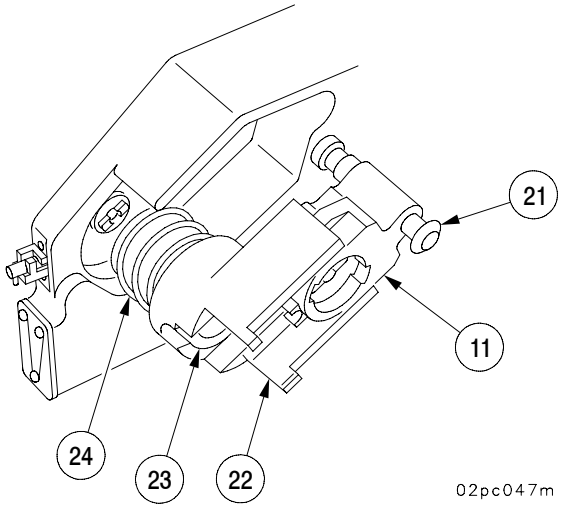


q. Remove obturator group (25) from breechblock (14).

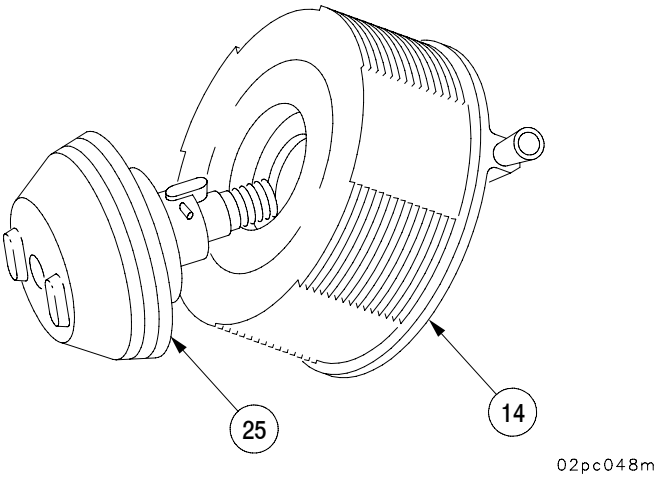

## 3-8 ARMAMENT AND CAB MAINTENANCE - CONTINUED

### 3-8.9 Disassembly of Breech Mechanism - Continued

**WARNING**

Breechblock weighs approximately 125 lbs (57 kg). Two persons are needed to remove the breechblock in order to prevent injury to personnel. Insert cleaning staff wrapped with rags through breechblock and carrier to prevent breechblock from sliding and injury to personnel.

r. To remove breechblock (14), position 24 inch cleaning staff (26) wrapped with rags through spindle hole of breechblock and carrier assembly (27).

s. While supporting both ends of cleaning staff (26), lift and slide breechblock (14) off carrier assembly (27).

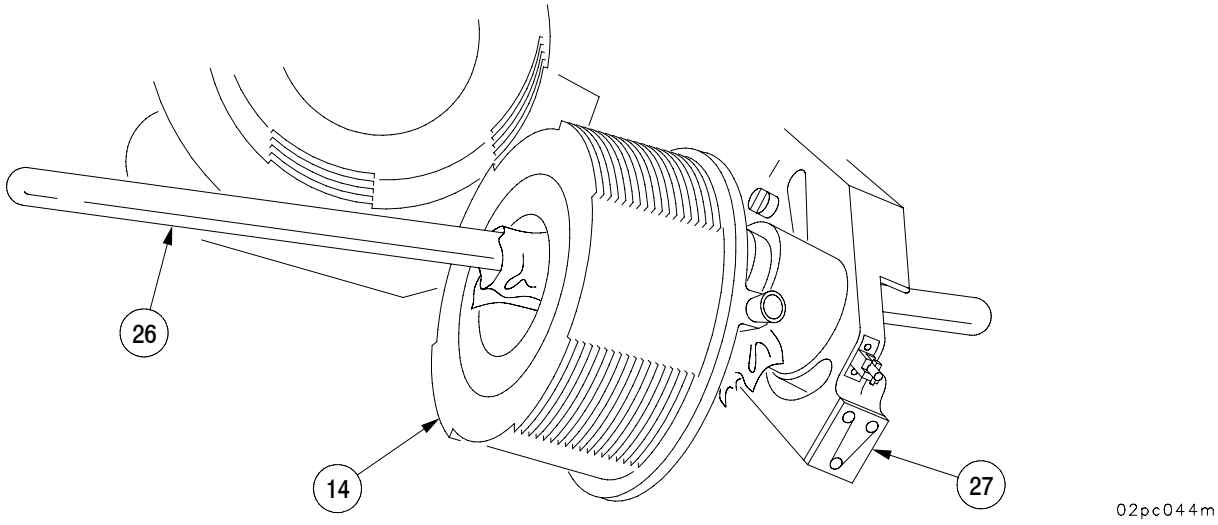

## 3-8 ARMAMENT AND CAB MAINTENANCE - CONTINUED

### 3-8.9 Disassembly of Breech Mechanism - Continued

t. Disassemble firing mechanism (12) as follows:

(1) Place firing mechanism (12) on solid flat surface with follower (28) end up.

**NOTE**

- Disassembly will require using the M18 fuze setter.
- A small screwdriver or pointed object will be required to remove lever pin.

(2) Place fuzesetter wrench over follower (28) and depress follower until pin (29) can be removed from lever (30) and yoke (31). Remove pin and lever.

**WARNING**

Springs are under compression. Raise fuzesetter wrench, follower, and case assembly slowly or personnel injury may result.

(3) Raise fuzesetter wrench and remove fuzesetter wrench, follower (28), and case assembly (32).

**NOTE**

Firing mechanism contains three balls. Be careful that balls are not lost during disassembly.

(4) Remove spring (33), spring (34), sleeve (35), and spring (36).

(5) Separate yoke (31), three balls (37), cup (38), and hammer (39).

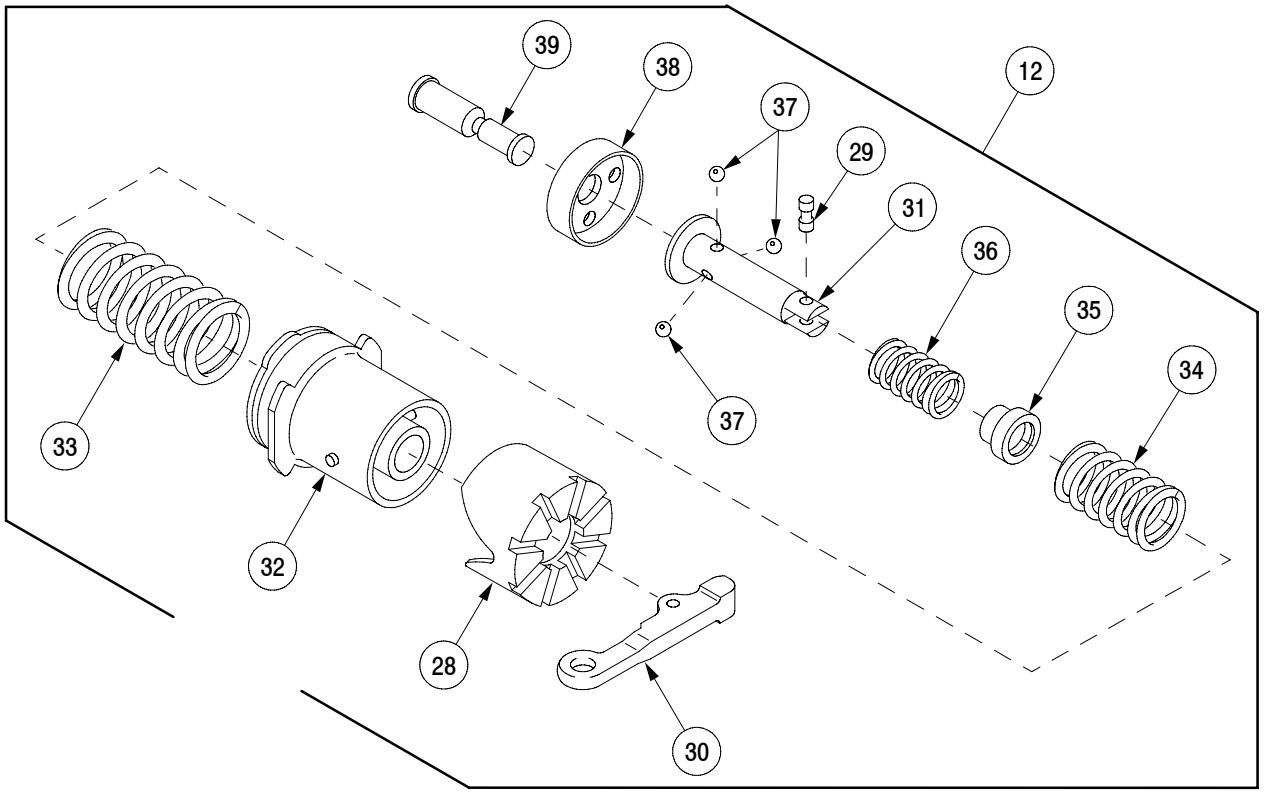


02pc043m

## 3-8 ARMAMENT AND CAB MAINTENANCE - CONTINUED

### 3-8.9 Disassembly of Breech Mechanism - Continued

**CAUTION**

The firing pin is under pressure and can spring out when retainer is moved back. Hold firing pin during disassembly to prevent loss or damage.

u. Disassemble firing block assembly (11) as follows:

(1) Depress firing pin (40) and remove retainer (41) away from firing pin.

(2) Remove firing pin (40), spring (42), and retainer (41) from firing block (43).

**NOTE**

If firing pin does not “pop out” when retainer is removed, the firing pin or block may have been burred by the retainer. (If unsuccessful, notify unit maintenance). Firing pin or block may require deburring prior to reassembly. If firing pin is bent, broken, or severely burred, replace with onboard spare firing pin, and turn in old pin to unit maintenance.

(3) Inspect spring (42). If broken, kinked, or worn, notify unit maintenance.

(4) Inspect retainer (41) for damage. If broken, distorted, or kinked, replace with onboard spare retainer, and turn in old retainer to unit maintenance.

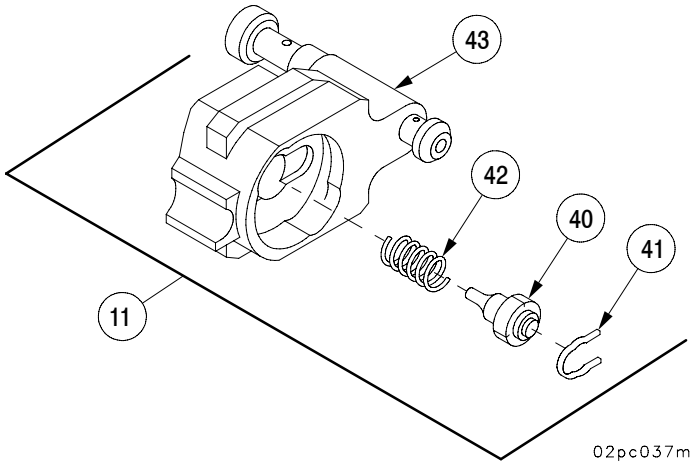

# 3-8 ARMAMENT AND CAB MAINTENANCE - CONTINUED

## 3-8.9 Disassembly of Breech Mechanism - Continued

v. Disassemble obturator group (25) to clean and inspect as follows:

(1) Remove obturator disk (44), rear split ring (45), inner ring (46), obturator pad (47), and front split ring (48) from spindle assembly (49).

**CAUTION**

Do not apply oil or cleaning solvent to pad. Clean with soap and water.

(2) Clean obturator pad (47) with soap and water. Dry with clean rags.

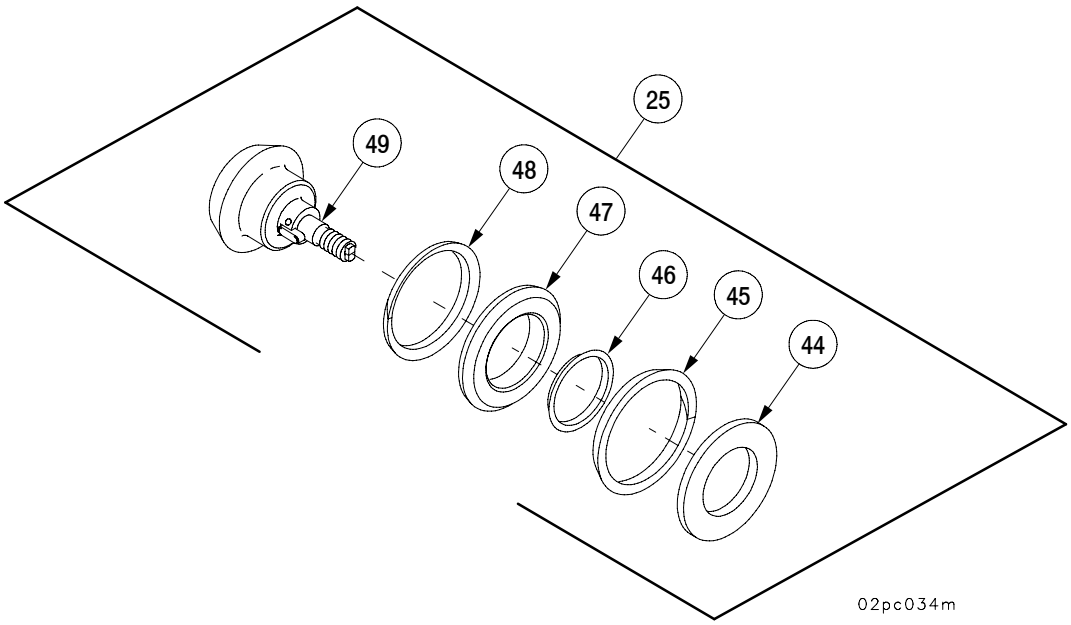

# 3-8 ARMAMENT AND CAB MAINTENANCE - CONTINUED

## 3-8.9 Disassembly of Breech Mechanism - Continued

(3) Inspect obturator group components as follows:

(a) Inspect obturator pad (47) for evidence of leakage past sealing surfaces. Replace obturator pad if sliced, cracked, chipped, or damaged.

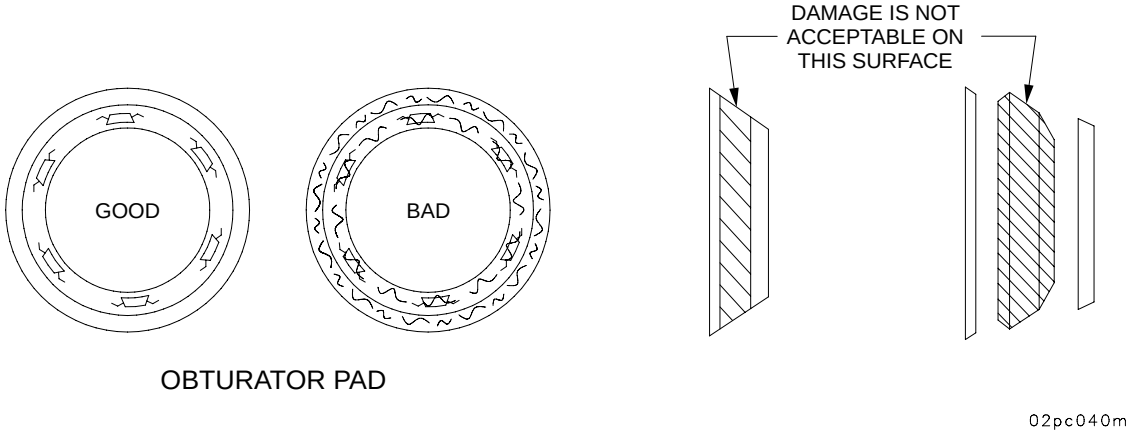


(b) Inspect split rings (45 and 48) for deformed shape.

- Maximum allowable circular spread: 3/8 inch front split ring; 1/8 inch rear split ring.

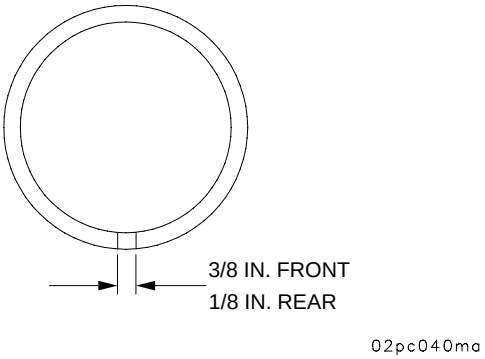


- Maximum allowable gap at split: 1/16 inch front split ring; no gap allowed, rear split ring.

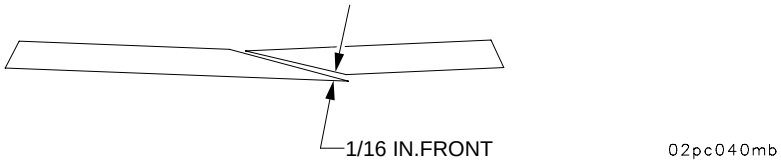

# 3-8 ARMAMENT AND CAB MAINTENANCE - CONTINUED

## 3-8.9 Disassembly of Breech Mechanism - Continued

**NOTE**

The lip of the M82 primer case measures approximately 1/16 inch.

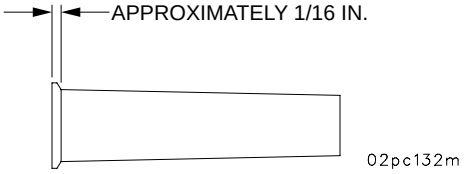


(c) Gouges in surface between obturator pad (47) and split ring mating surface are normal and will not hinder operation, unless gouging is over 50 percent of the obturator pad.

(d) If there is evidence of leakage past breeching assembly, notify unit maintenance.

(e) Inspect obturator spindle assembly (49) and split rings (45 and 48) for burrs or cracks.

- If burns or cracks are present in the front split ring, or if deformed in excess of criteria in para 3-8.9v.(3), replace.
- If burrs or cracks are present in the rear split ring, or if deformed in excess of criteria in para 3-8.9v.(3), notify unit maintenance.

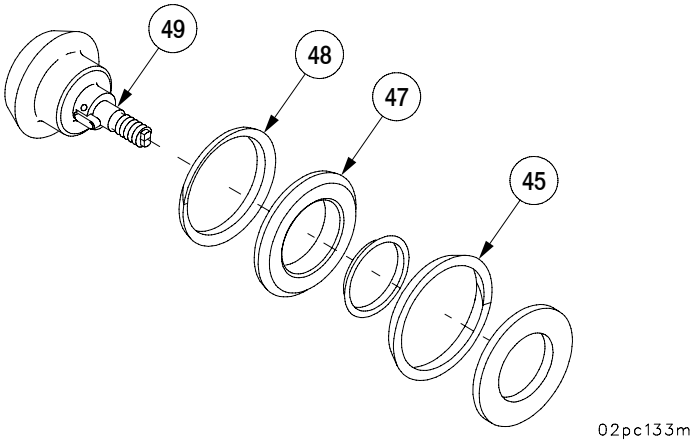

# 3-8 ARMAMENT AND CAB MAINTENANCE - CONTINUED

## 3-8.10 Assembly of Breech Mechanism

**NOTE**

Rear split ring and front split ring must be installed with splits located 180° apart.

a. Install the front split ring (48), obturator pad (47), inner ring (46), rear split ring (45), and obturator disk (44) on spindle assembly (49). Make sure that split rings (45 and 48) are aligned 180° apart as shown.

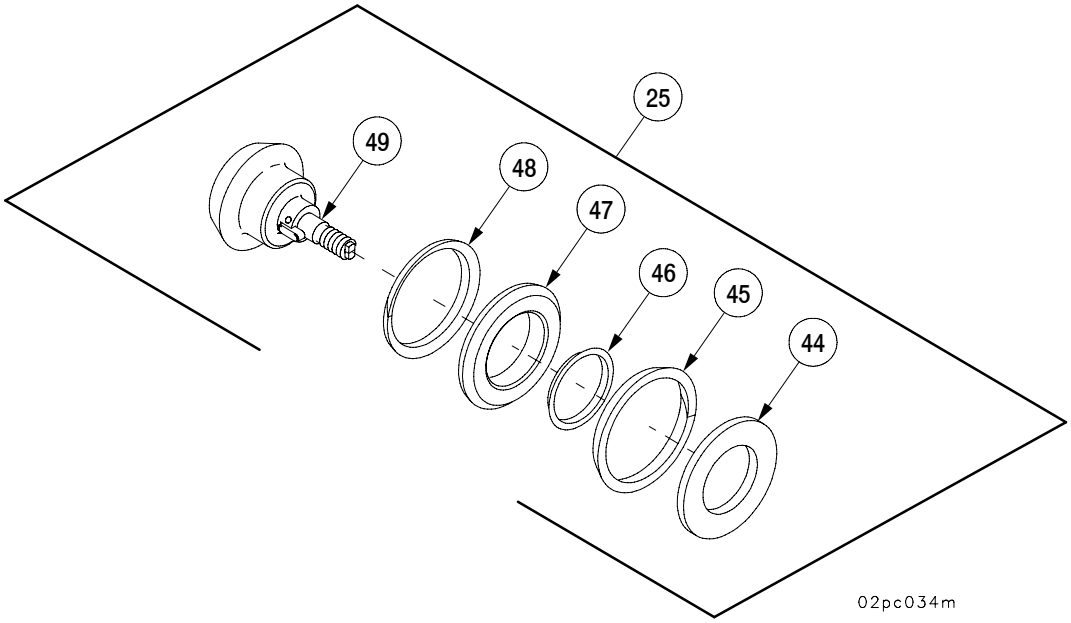


b. Assemble firing block assembly (11) as follows:

(1) Install spring (42) and firing pin (40) in firing block (43).

(2) Depress firing pin (40) and install retainer (41).

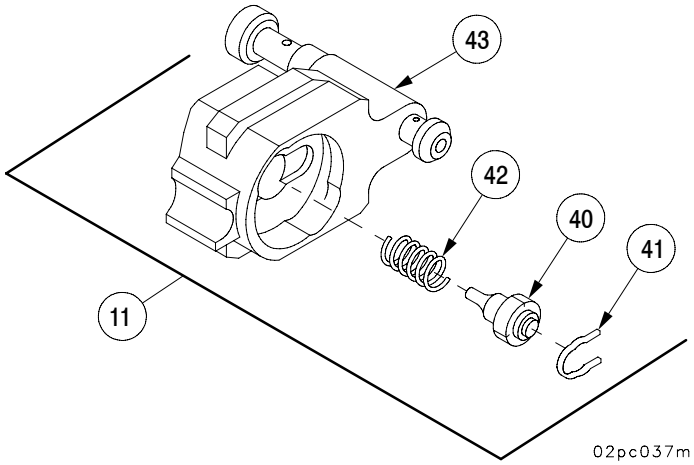

# 3-8 ARMAMENT AND CAB MAINTENANCE - CONTINUED

## 3-8.10 Assembly of Breech Mechanism - Continued

c. Assemble firing mechanism (12) as follows:

(1) Clean and lubricate firing mechanism components before assembly (Appendix I).

(2) Install cup (38) on hammer (39).

(3) Install yoke (31) on hammer (39).

(4) Align three holes in yoke (31) with groove in hammer (39).

**NOTE**

Apply GAA (item 18, Appx D) to holes in yoke prior to installing balls for ease of assembly.

(5) Install three balls (37) into holes in yoke (31).

(6) Install spring (36) and sleeve (35) on yoke (31).

(7) Slide sleeve (35) against spring (36) until spring is fully compressed against cup (38).

(8) Pull hammer (39) from yoke (31) until sleeve (35) locks in place.

**NOTE**

M18 fuzesetter is used to complete assembly.

(9) Place yoke and hammer assembly on socket wrench so that hammer swings freely inside socket.

(10) Install spring (34) and spring (33) over yoke (31).

(11) Install case assembly (32) over spring (33).

(12) Install follower (28) over case assembly (32), aligning cutouts of follower with pins on case assembly.

(13) Place fuzesetter wrench over follower (28) and depress to compress springs until lever (30) can be inserted in yoke (31).

(14) Install pin (29) in lever (30) and yoke (31).

(15) Push hammer (39) against solid surface to seat assembly.

# 3-8 ARMAMENT AND CAB MAINTENANCE - CONTINUED

## 3-8.10 Assembly of Breech Mechanism - Continued

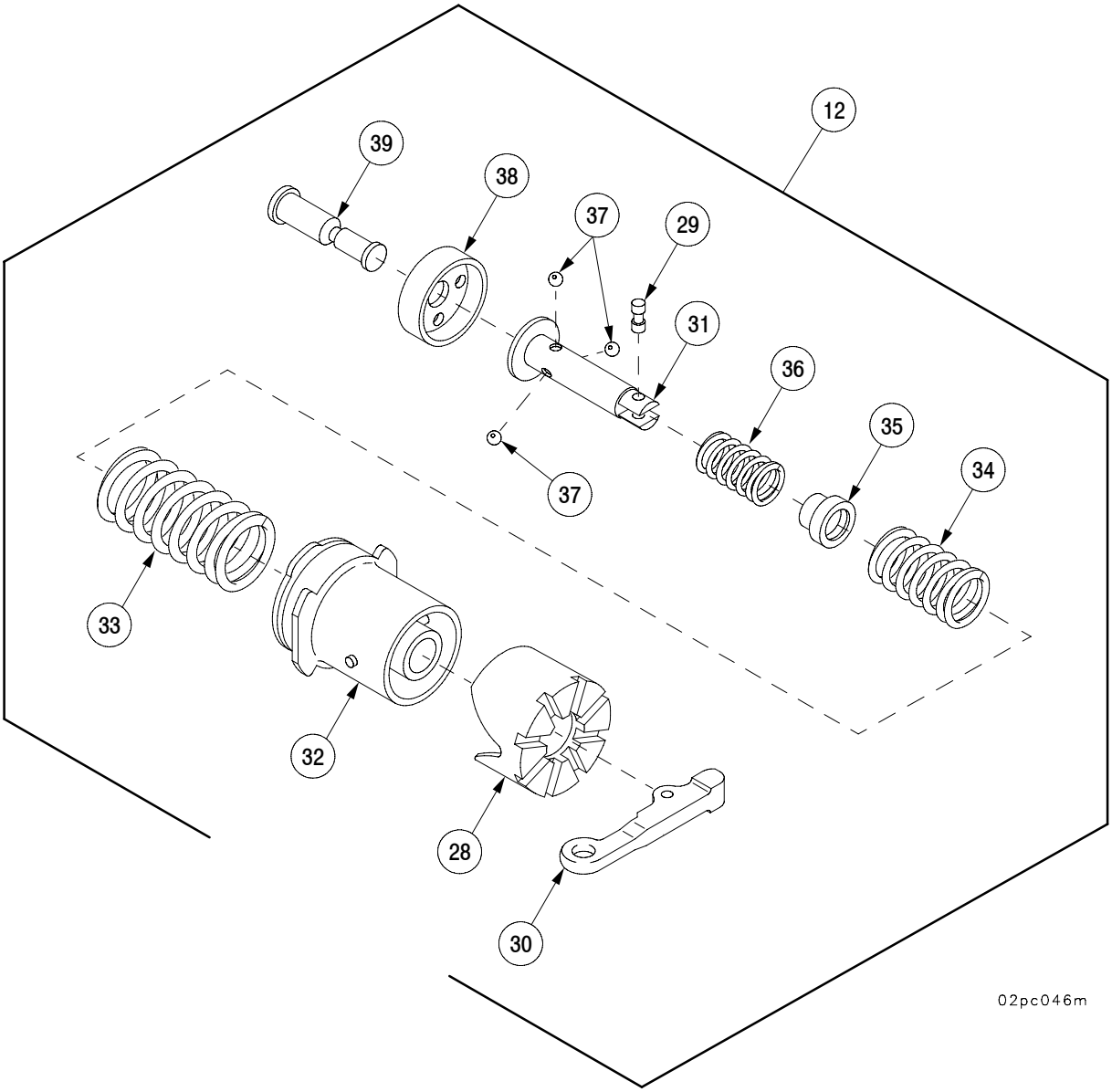

# 3-8 ARMAMENT AND CAB MAINTENANCE - CONTINUED

## 3-8.10 Assembly of Breech Mechanism - Continued

**WARNING**

Breechblock weighs approximately 125 lbs (57 kg). Two persons are needed to install the breechblock in order to prevent injury to personnel. Insert cleaning staff wrapped with rags through breechblock and carrier to prevent breechblock from sliding and injury to personnel.

e. Insert 24 inch cleaning staff (26) wrapped with rags through breechblock (14).

f. Align arrows of spur gear (51) and rack gear (52).

g. With carrier assembly (27) in fully open position, lift breechblock (14) and insert one end of cleaning staff (26) into carrier assembly (27).

h. Slide breechblock (14) down cleaning staff (26) onto carrier assembly (27). Remove cleaning staff (26) from breechblock (14) and carrier assembly (27).

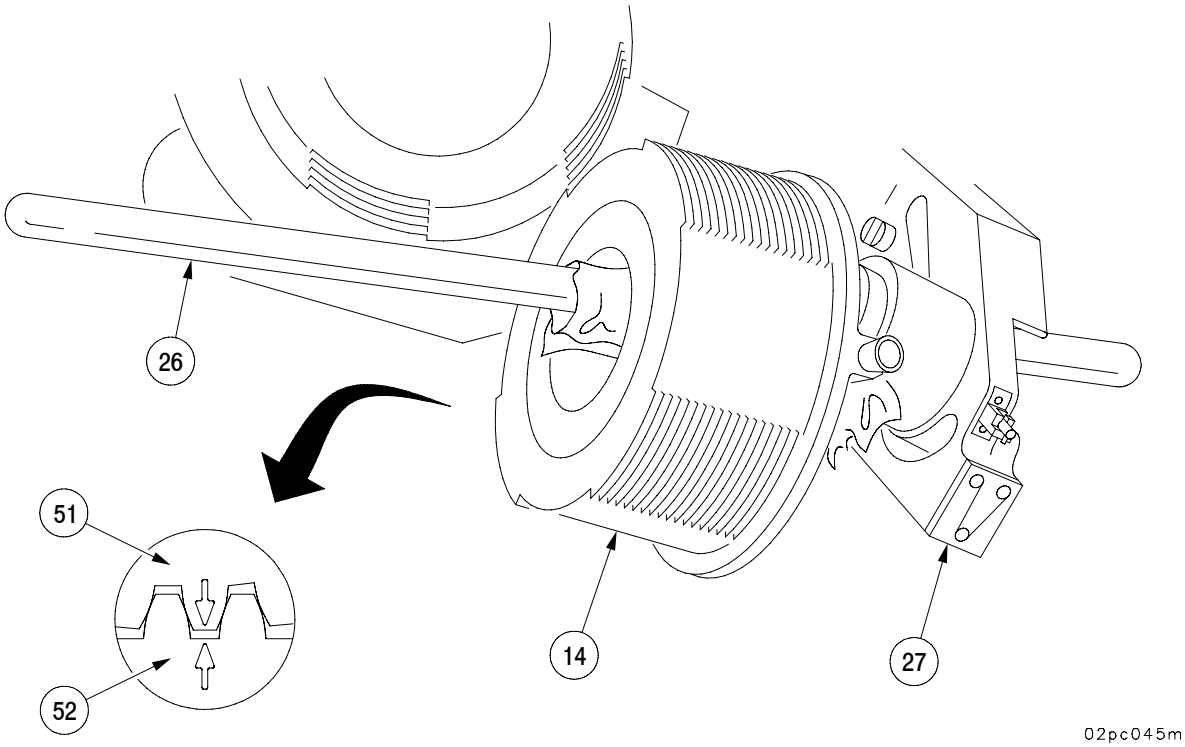

# 3-8 ARMAMENT AND CAB MAINTENANCE - CONTINUED

## 3-8.10 Assembly of Breech Mechanism - Continued

i. With carrier assembly (27) in fully open position, align closing lug (50) with detent plunger (16). Insure arrows on spur gear (51) and rack gear (52) aligned in center of inspection hole (53), and slide breechblock (14) completely onto carrier assembly. Recheck alignment marks.

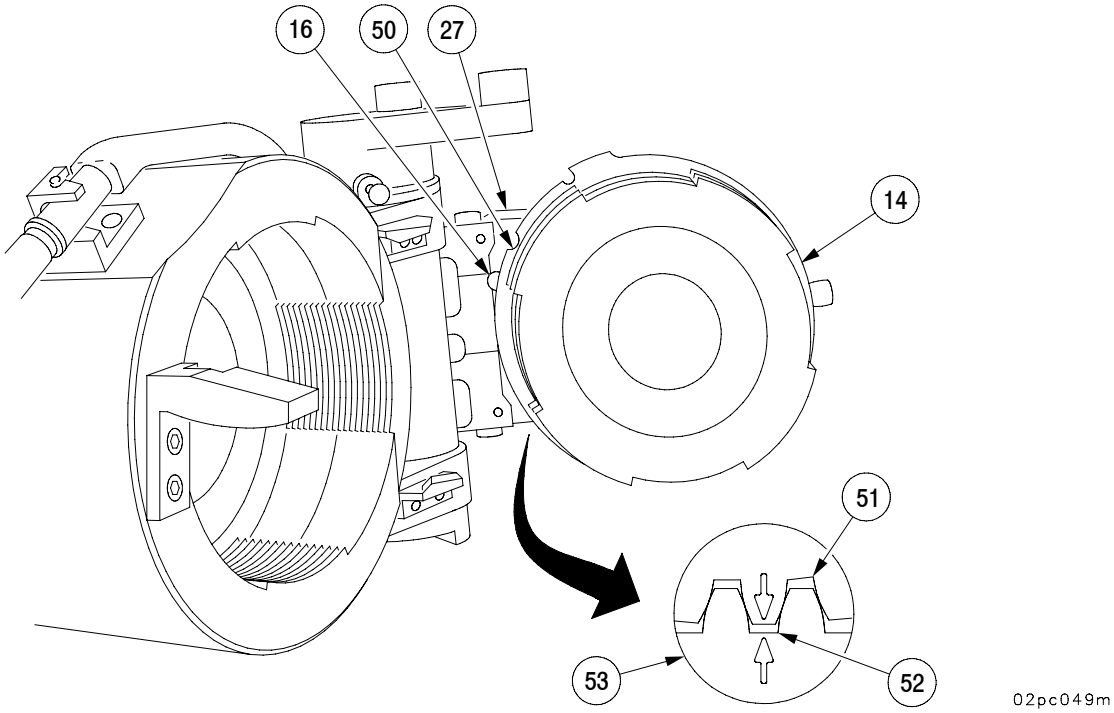


j. Install obturator group (25) into breechblock (14).

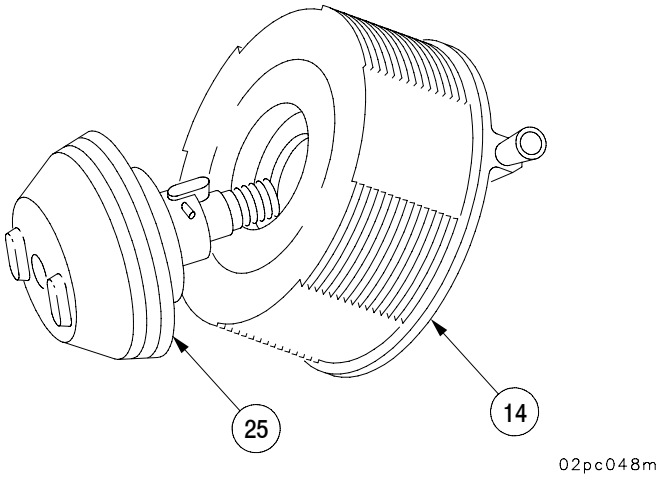

# 3-8 ARMAMENT AND CAB MAINTENANCE - CONTINUED

## 3-8.10 Assembly of Breech Mechanism - Continued

**WARNING**

The follower group has a safety interlock which keeps the block from moving to the firing position until breechblock is fully closed. The follower must be in good working condition and properly assembled in firing mechanism to make sure safety works.

k. Install obturator spindle spring (24), firing mechanism housing (22), and firing block assembly (11) into carrier assembly (27).

l. Move firing block assembly (11) to extreme right position by pulling follower knob (21) and sliding to right.

m. Support firing block assembly (11) and firing mechanism housing (22). Install obturator nut (23) with spanner wrench.

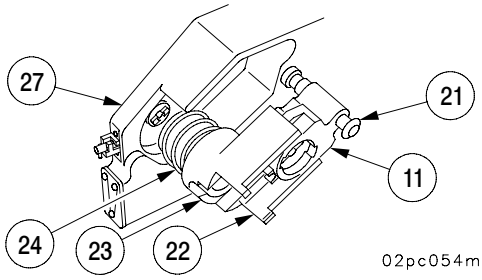


**NOTE**

Ensure that plunger tip seats in narrow slot of obturator nut (23).

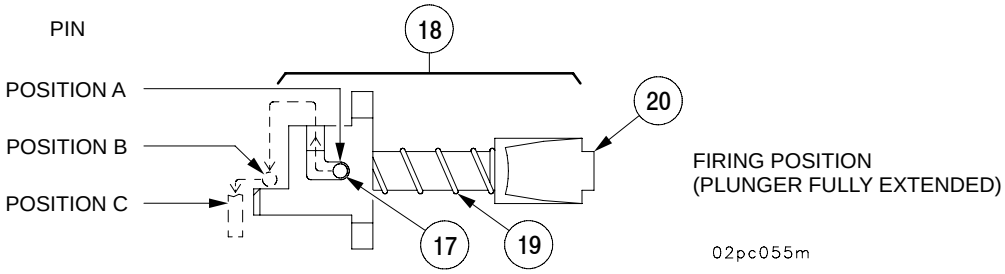


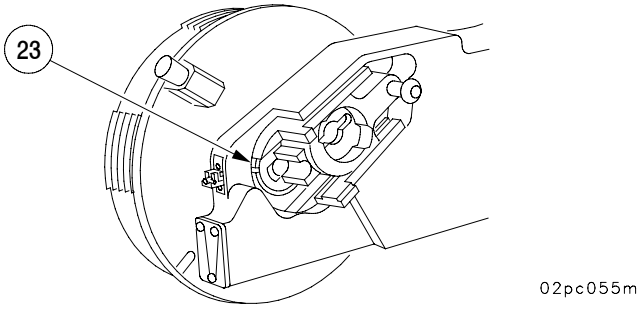

# 3-8 ARMAMENT AND CAB MAINTENANCE - CONTINUED

## 3-8.10 Assembly of Breech Mechanism - Continued

o. Depress carrier detent plunger (16) with drive punch. Rotate breechblock (14) clockwise to the LOCK position. Make sure carrier detent plunger is extended.

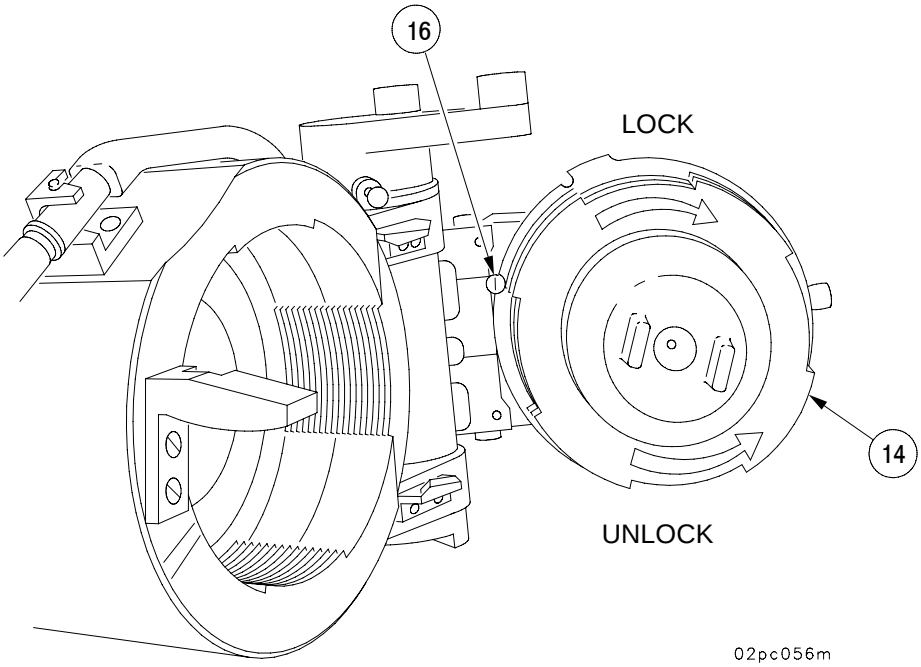


p. Slide firing block assembly (11) to center position.

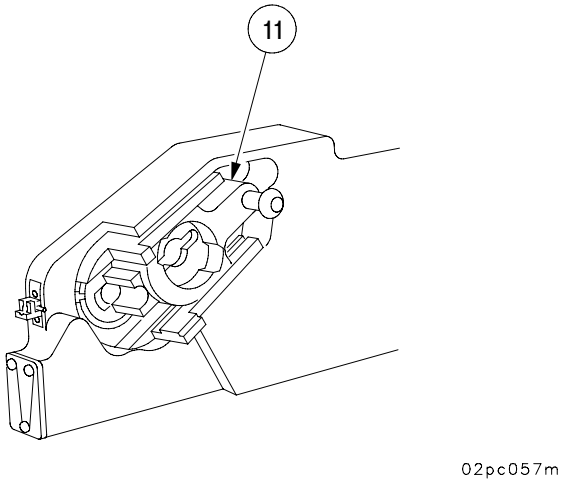

# 3-8 ARMAMENT AND CAB MAINTENANCE - CONTINUED

## 3-8.10 Assembly of Breech Mechanism - Continued

q. Disengage breech operating handle (13) from stop (15) and engage clutch pin (54). With one soldier supporting breechblock (14), close breechblock with breech operating handle (13).

r. Return breech operating handle (13) to stop (15).

**NOTE**

Witness marks must be aligned when breechblock is closed. If witness marks are not aligned, breechblock may be out of time. Remove and reinstall breechblock.

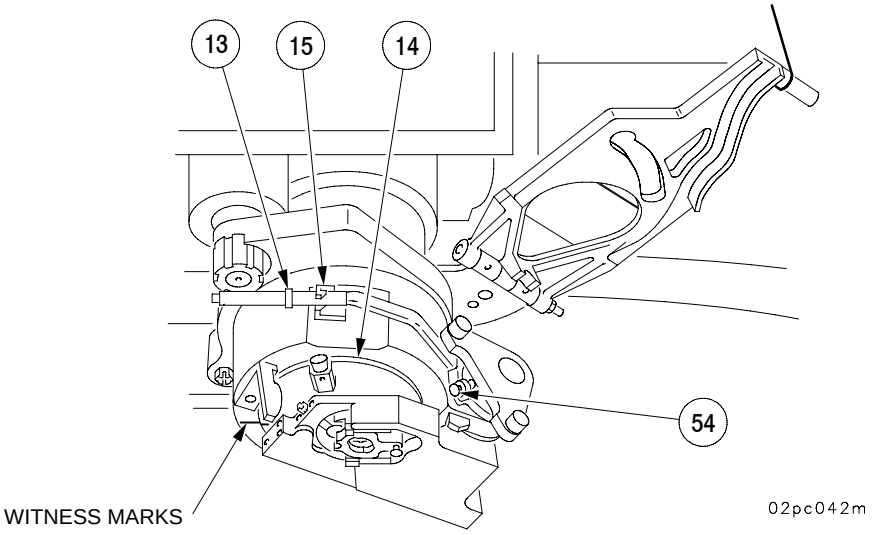


s. With firing block assembly (11) in center position, insert firing mechanism (12) and rotate counterclockwise until locked.

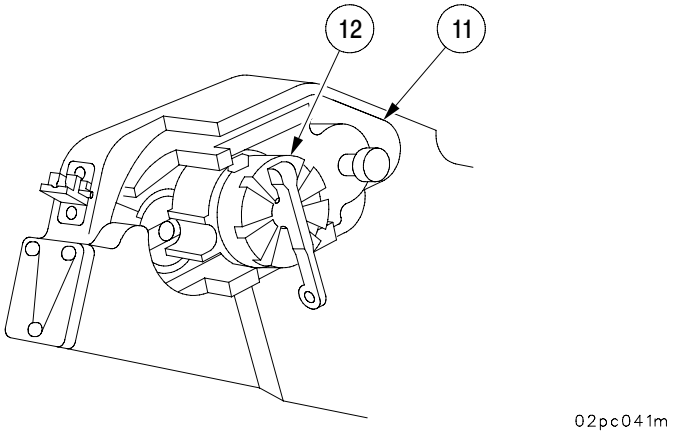

# 3-8 ARMAMENT AND CAB MAINTENANCE - CONTINUED

## 3-8.10 Assembly of Breech Mechanism - Continued

t. Remove strap and lower breech mechanism operating cam (10) onto operating crank assembly (55).

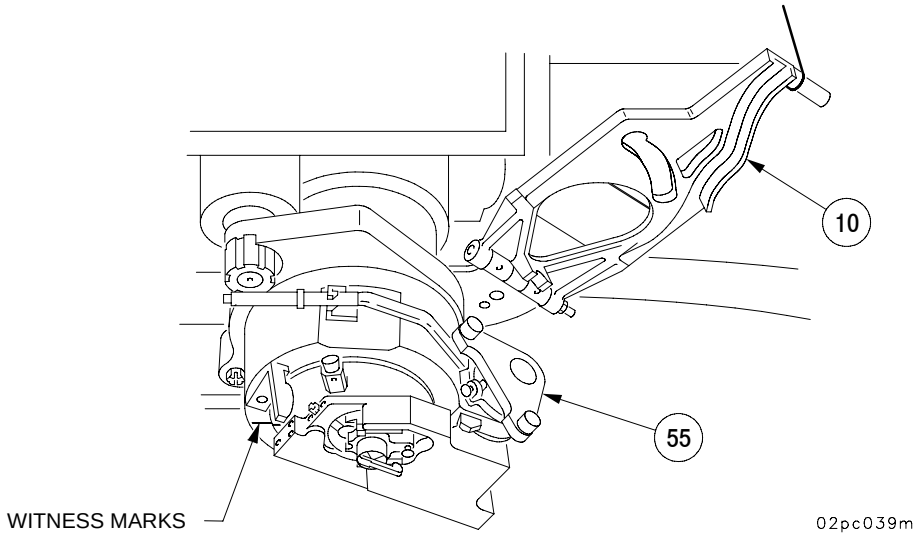


u. Position cam damper assembly (8) on breech mechanism operating cam (10) and install screw (9) in cradle assembly (56).

v. Tighten screw (9) until seat to seat length of cam damper assembly (8) is 4.0 inches (101.60 mm).

w. Tighten jamnut (7) to secure cam damper assembly (8) to cradle assembly (56).

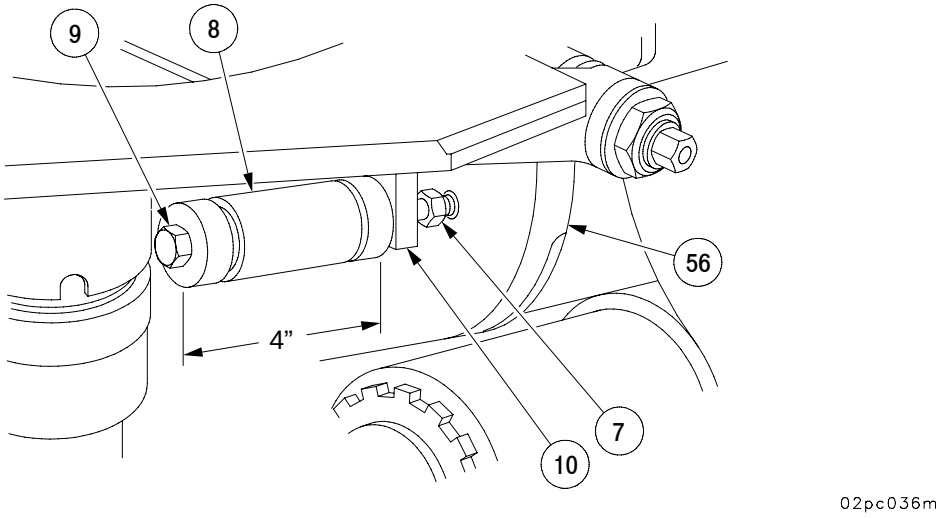

# 3-8 ARMAMENT AND CAB MAINTENANCE - CONTINUED

## 3-8.10 Assembly of Breech Mechanism - Continued

**CAUTION**

The notches in the adjuster provide graduations of adjustment. Do NOT apply more pre-load than is necessary to close the breechblock securely at the loading elevation (less than 300 mils). Use of final notch setting reduces the life of the leaf springs and should be used only if necessary (if breech does not close at loading elevation). Unnecessary use of a higher setting can cause damage to the breechblock detent plunger and breechblock stop surface.

**NOTE**

- Adjuster has lugs for an adjustable wrench or spanner wrench.
- Adjuster may have only two graduations.

x. Depress adjuster plunger (6) and apply pre-load tension on breech mechanism closing springs by turning adjuster (5) clockwise.

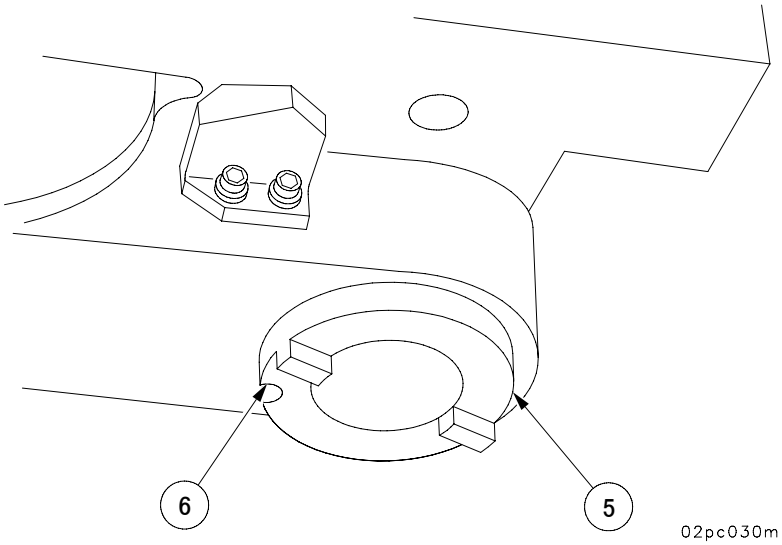

# 3-8 ARMAMENT AND CAB MAINTENANCE - CONTINUED

## 3-8.10 Assembly of Breech Mechanism - Continued

**WARNING**

Failure to ensure proper installation of rack springs and plates could cause injury to personnel during operation of breechblock.

**NOTE**

- The following steps require two people.
- If stop plate has an arrow on it, be sure it points to muzzle end.

y. Install two rack springs (4) and stop plate (3). Apply pressure to stop plate and rack springs with wood hammer handle or suitable wooden dowel.

z. Depress plunger (1) with punch and slide rack plate (2) over stop plate (3). Ensure that plunger engages in rearward hole of rack plate.

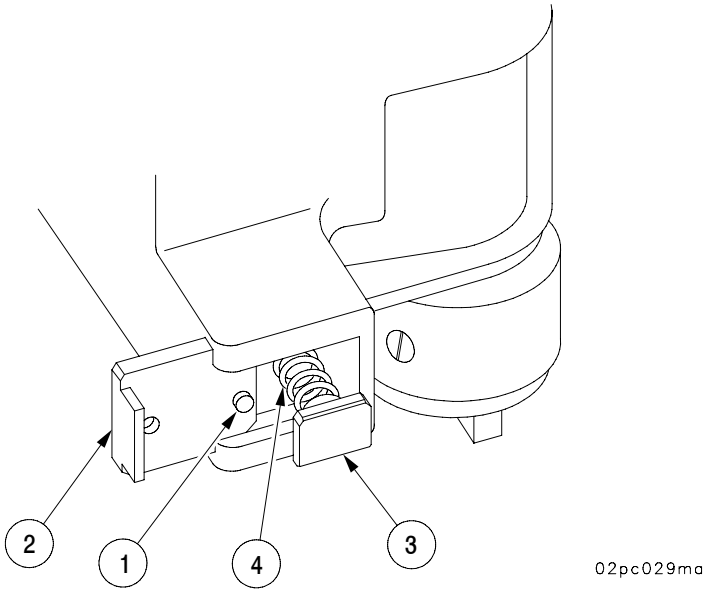

# 3-8 ARMAMENT AND CAB MAINTENANCE - CONTINUED

## 3-8.11 Filling Hydraulic Reservoir

**NOTE**

Prior to adding fluid, check hydraulic fluid level using the rod assembly, IAW Appx I.

a. Remove protective cap (1) from coupling (2) at system fill manifold (3).

**CAUTION**

Do not use hose or pump contaminated with any other fluid (oil, water, etc.) to fill hydraulic system. Contamination will cause damage to equipment.

b. Connect hand pump (4) input hose (5) into container of hydraulic fluid (OHT) (item 22, Appx D). Connect output hose (6) of hand pump (4) to coupling (2) at system fill manifold (3).

c. Remove dust cap (7) from bellows boss (8) on hydraulic reservoir (9).

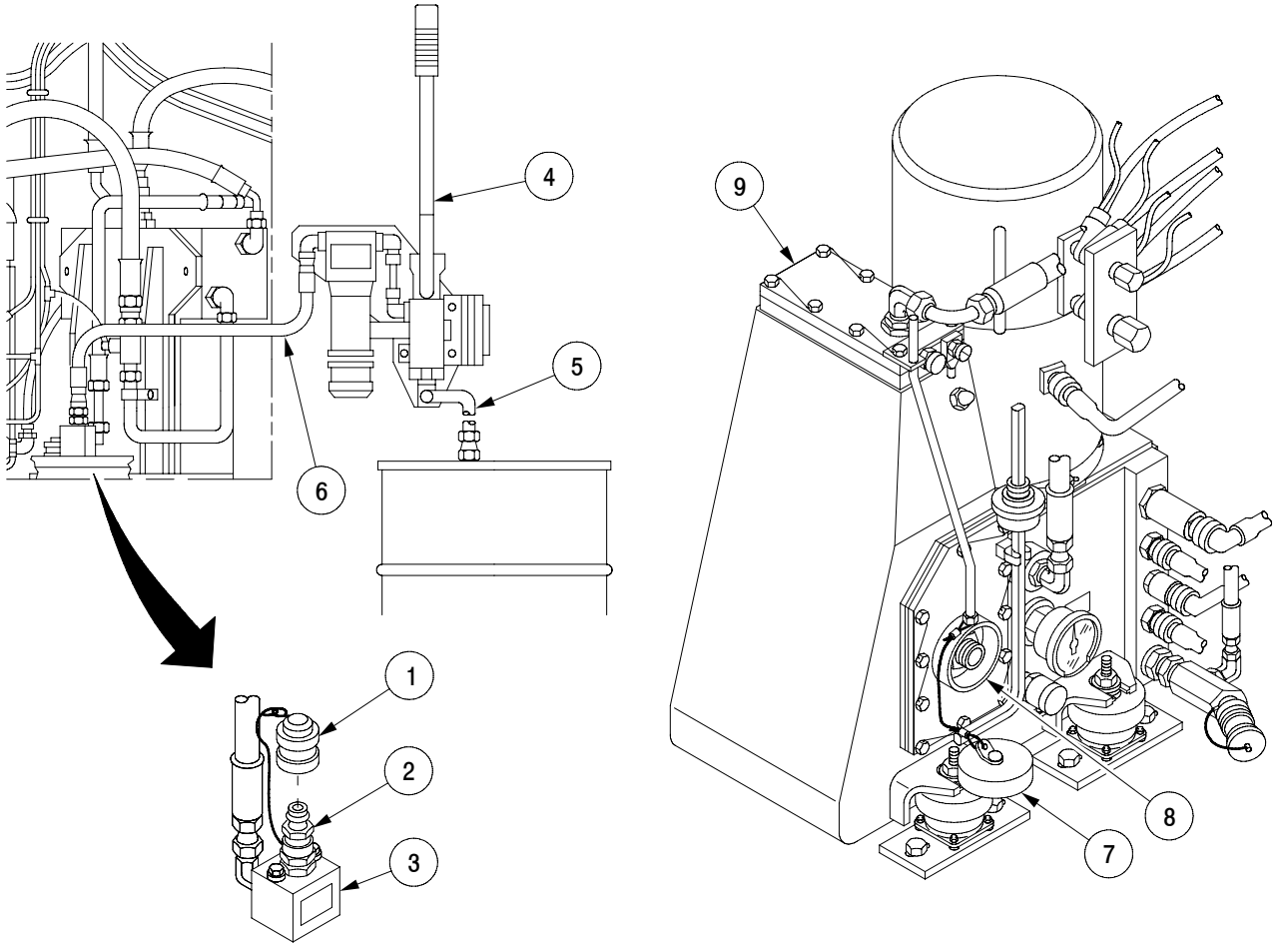


16pc008m

# 3-8 ARMAMENT AND CAB MAINTENANCE - CONTINUED

## 3-8.11 Filling Hydraulic Reservoir - Continued

d. Insert dipstick (10) into bellows boss (8).

e. Screw rod guide (11) into bellows boss (8).

**NOTE**

- Check to ensure that vent holes in rod guide is clear.
- Do not tighten cap to rod guide. Rod must be able to slide out of bellows as fluid is added.

f. Screw dipstick cap (12) to rod guide (11).

g. Attach one end of plastic tubing to bleeder valve (13) at the top of hydraulic reservoir (9). Place the other end of tubing in a drain pan.

h. Open bleeder valve (13).

i. Push dipstick (10) into bellows boss (8) until it bottoms out. If dipstick (10) indicates a higher temperature than the thermometer (14), apply pressure inward on dipstick (10) until temperature on dipstick (10) and thermometer (14) are the same.

j. Check sight plug (15). Do not add fluid if it is visible in sight plug (15).

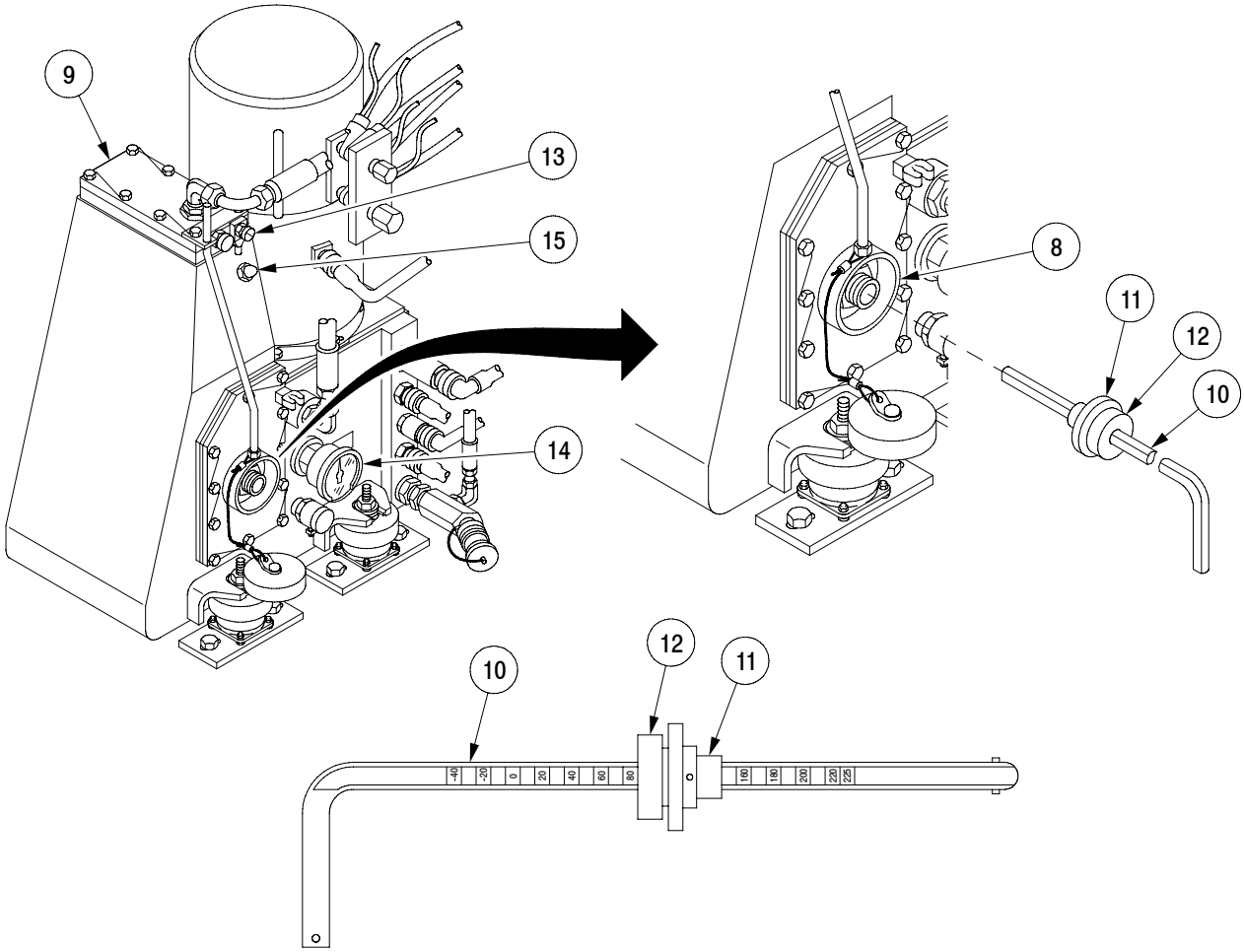

# 3-8 ARMAMENT AND CAB MAINTENANCE - CONTINUED

## 3-8.11 Filling Hydraulic Reservoir - Continued

k. If dipstick (10) indicates a lower temperature than the thermometer (14) when it is bottomed out and no fluid is visible in the sight plug (15), pump fluid into the reservoir (9) until fluid is visible in sight plug (15).

l. Ensure the dipstick (10) has backed out of the bellows boss (8) and the temperature indicated on the dipstick (10) and thermometer (14) match.

m. Tighten rod cap (12) to rod guide (11).

n. Add additional hydraulic fluid until clear fluid drains from bleeder valve (13).

o. Close bleeder valve (13).

p. Disconnect output hose (6) from coupling (2).

q. Remove plastic tubing from bleeder valve (13) on the hydraulic reservoir (9).

r. Install cap (1) on coupling (2) at system fill manifold (3).

s. Remove rod guide (11) from bellows boss (8).

t. Stow dipstick (10) in clamp (16).

u. Install dust cap (7) on bellows boss (8).

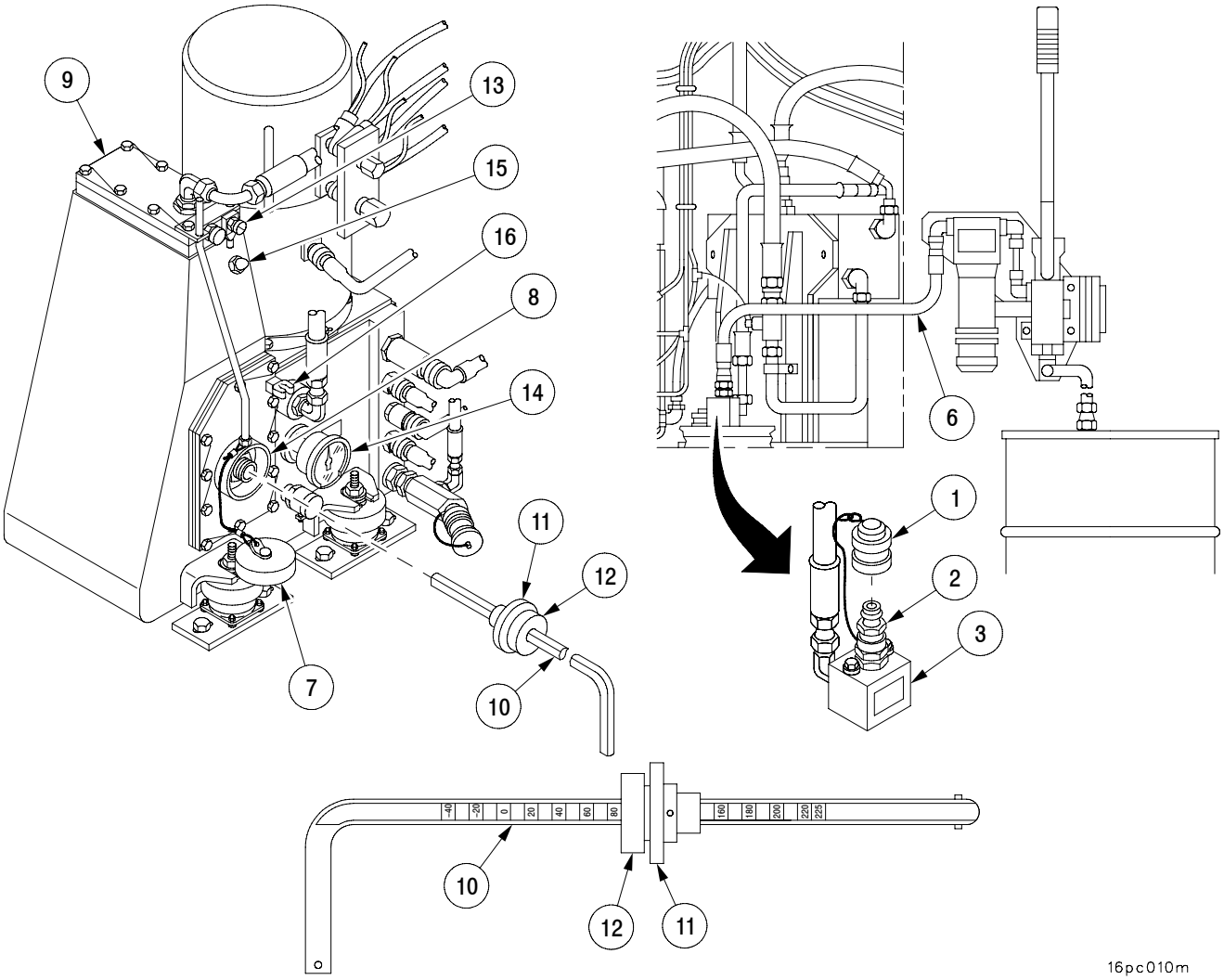

## 3-8 ARMAMENT AND CAB MAINTENANCE - CONTINUED

### 3-8.12 Hydraulic Control Box LED Removal.

**a. Removal.**

**WARNING**

Maker sure MASTER switch is OFF when working on hull electrical system to avoid electrical shocks and burns.

1 Remove lens cap (1) from housing cover (2).

2 Separate LED (3) from lens cap (1).

**b. Installation.**

1 Apply light coat of anti-corrosion silicone compound (item 38, Appendix D) to socket before installing new LED.

2 Install LED (3) in lens cap (1).

3 Install lens cap (1) in housing cover (2).

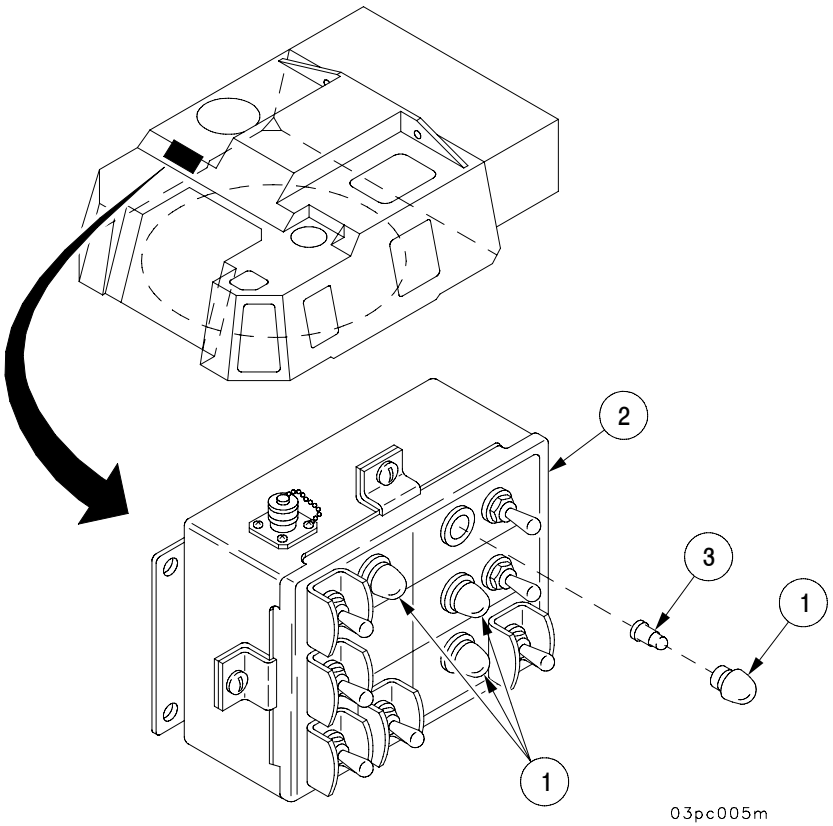

## 3-8 ARMAMENT AND CAB MAINTENANCE - CONTINUED

### 3-8.13 M3 Heater Pilot Light Lamp Removal.

**a. Removal.**

**WARNING**

Make sure MASTER switch is OFF when working on hull electrical system to avoid electrical shocks and burns.

1 Remove pilot light lens (1) from heater (2).

2 Separate lamp (3) from pilot light lens(1).

**b. Installation.**

1 Apply light coat of anti-corrosion silicone compound (item 38, Appendix D) to socket before installing new LED.

2 Install lamp (3) in pilot light lens (1).

3 Install pilot light lens (1) in heater (2).

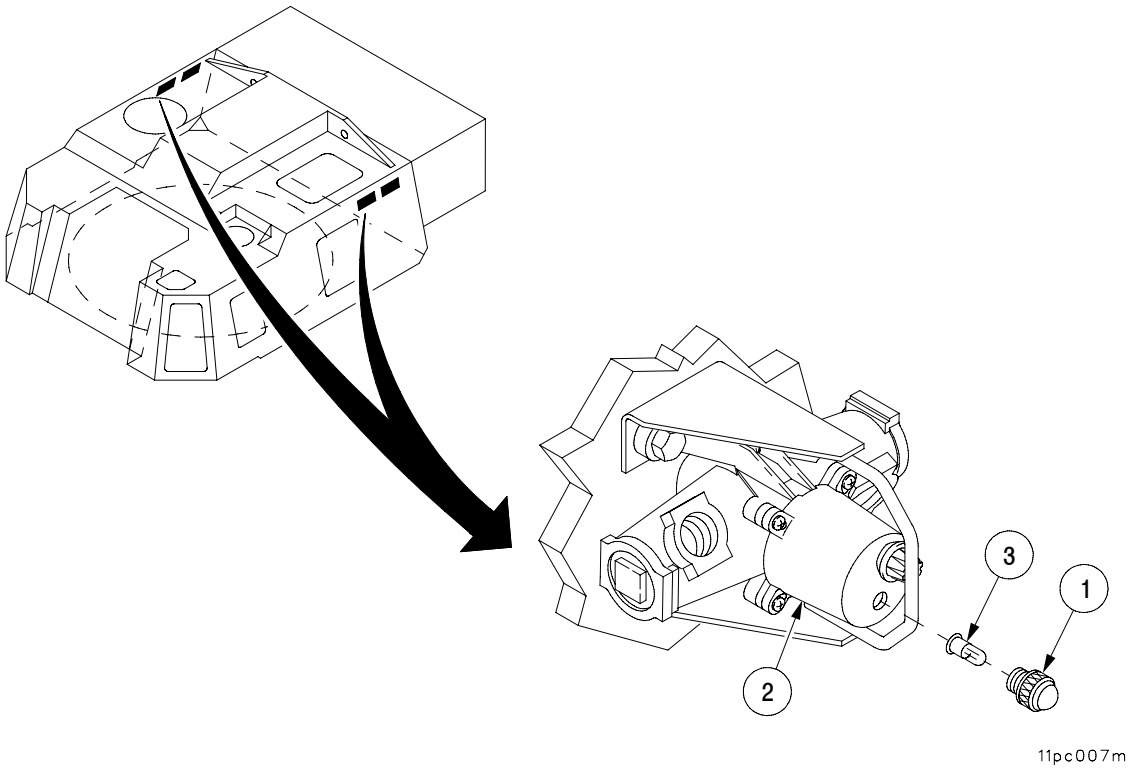

## 3-8 ARMAMENT AND CAB MAINTENANCE - CONTINUED

### 3-8.14 Vehicle Motion Sensor (VMS) Modem LED Removal (Hull/Cab).

**a. Removal.**

**WARNING**

Make sure MASTER switch is OFF when working on hull electrical system to avoid electrical shocks and burns.

1 Remove lens cap (1) from housing (2).

2 Separate LED (3) from lens cap (1).

**b. Installation.**

1 Apply light coat of anti-corrosion silicone compound (item 38, Appendix D) to socket before installing new LED.

2 Install LED (3) in lens cap (1).

3 Install lens cap (1) in housing (2).

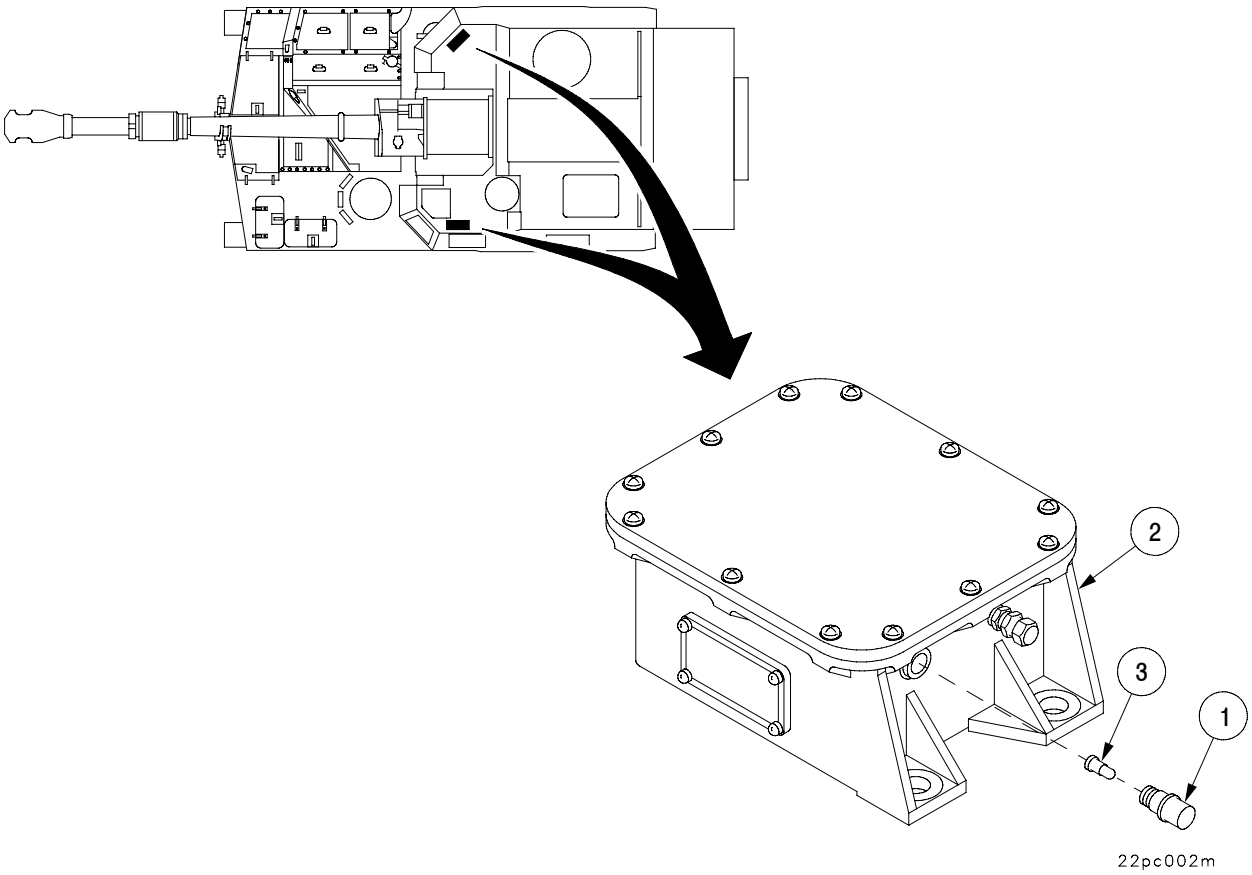

## 3-8 ARMAMENT AND CAB MAINTENANCE - CONTINUED

### 3-8.15 AFCS Components, LED Removal.

**a. Removal.**

**WARNING**

Make sure MASTER switch is OFF when working on hull electrical system to avoid electrical shocks and burns.

**NOTE**

AFCS component's LEDs are removed and installed in the same manner.

1 Remove lens cap (1) from housing.

2 Separate LED (2) from lens cap (1).

**b. Installation.**

1 Apply light coat of anti-corrosion silicone compound (item 38, Appendix D) to socket before installing new LED.

2 Install LED (2) in lens cap (1).

3 Install lens cap (1) in housing.

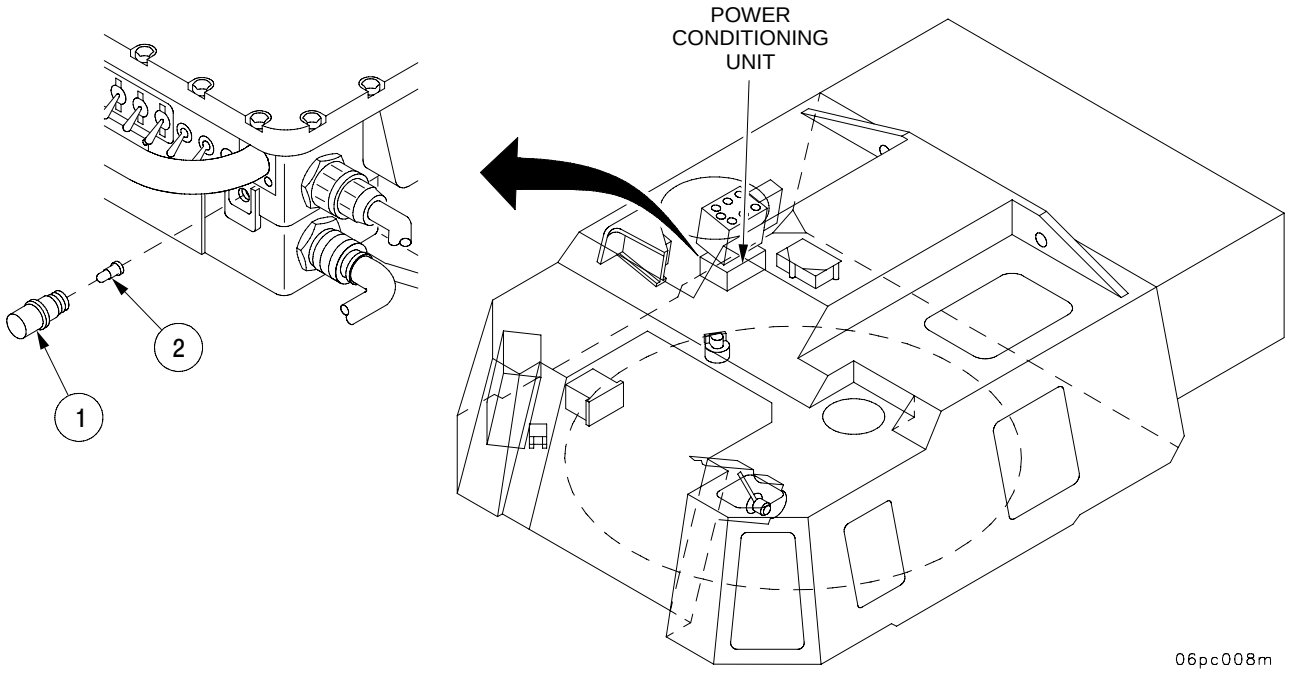

## 3-8 ARMAMENT AND CAB MAINTENANCE - CONTINUED

### 3-8.16 Microclimate Conditioning System (MCS) NBC Filter Replacement.

**a. Removal.**

**WARNING**

- If “Training Filter” is installed it must be replaced with the M48 NBC filter prior to Tactical Operation.
- If NBC exposure is suspected, all filter media will be handled by personnel wearing full NBC protective equipment.

**NOTE**

- Tag should be installed on filter cover assembly only when training filter is installed in lieu of M48 NBC filter. Retain tag with Training Filter when filter is removed.
- If Training Filter is installed, an M48 NBC filter in its original unbroken package must be on hand for Tactical Operations.

1 Open MCS access door.

2 Remove two screws (1), two lockwashers (2), and two flat washers (3).

3 Remove mounting plate (4).

4 Remove five screws (5), five flat washers (6), tag (7), if installed, and filter access cover (8).

5 Set retractable filter inlet support (9) to UNLOCKED position.

6 Carefully lift up NBC filter (10), slip disposal bag around filter, and remove disposal bag.

7 Wipe filter cavity with M295 Decontamination Wipes (item 48, Appx D) . Place wipes in disposal bag with NBC filter. Dispose of bagged filter and wipes IAW local SOP.

**b. Installation.**

1 Install new NBC filter (10), aligning holes at both ends of filter with filter inlet supports (9).

2 Turn retractable filter inlet support (9) to LOCKED position, making sure that support engages NBC filter (10).

3 Install filter access cover (8) and tag (7), if removed, with five flat washers (6) and five screws (5).

4 Place mounting plate (4) in position.

5 Install two flat washers (3), two lockwashers (2), and two screws (1).

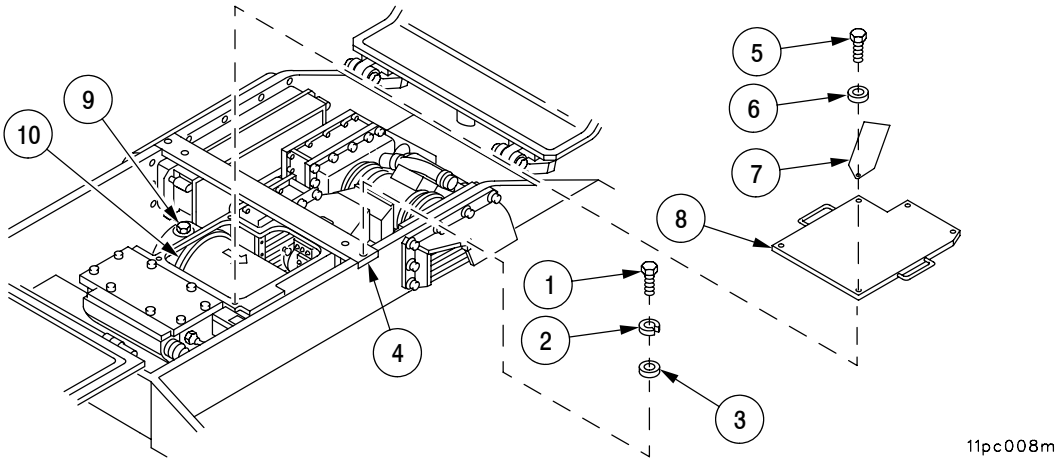

## 3-8 ARMAMENT AND CAB MAINTENANCE - CONTINUED

### 3-8.17 Slip Ring Segment Board Assembly Cleaning.

**WARNING**

- Electrical hazards may result if the segment boards are cleaned with master power switch ON.
- Use caution when rotating the cab to avoid personnel injury and/or equipment damage.

**NOTE**

Verify that all electrical components are powered OFF prior to cleaning the segment boards.

a. Clear by hand any loose debris from eight brush blocks and two segment boards.

b. Inspect the segment boards and brush blocks for damage. If necessary, notify unit maintenance.

c. Turn MASTER power switch ON.

d. Check function of electronic components. Record any malfunctions. If necessary, notify unit maintenance.

e. Start engine and set throttle to 1000 - 1200 rpm.

f. Release gun tube (para 2-8.19.1).

g. Power traverse cab (para 2-8.21.2) 700 mils left. This will permit access to the segment board cleaning mechanism (SBCM) (1) above upper left corner of rear door.

h. Verify that all electrical components are powered OFF.

i. Turn HYDRAULIC POWER, engine, and MASTER power switches OFF.

j. Remove the cleaning block (2) from the SBCM (1).

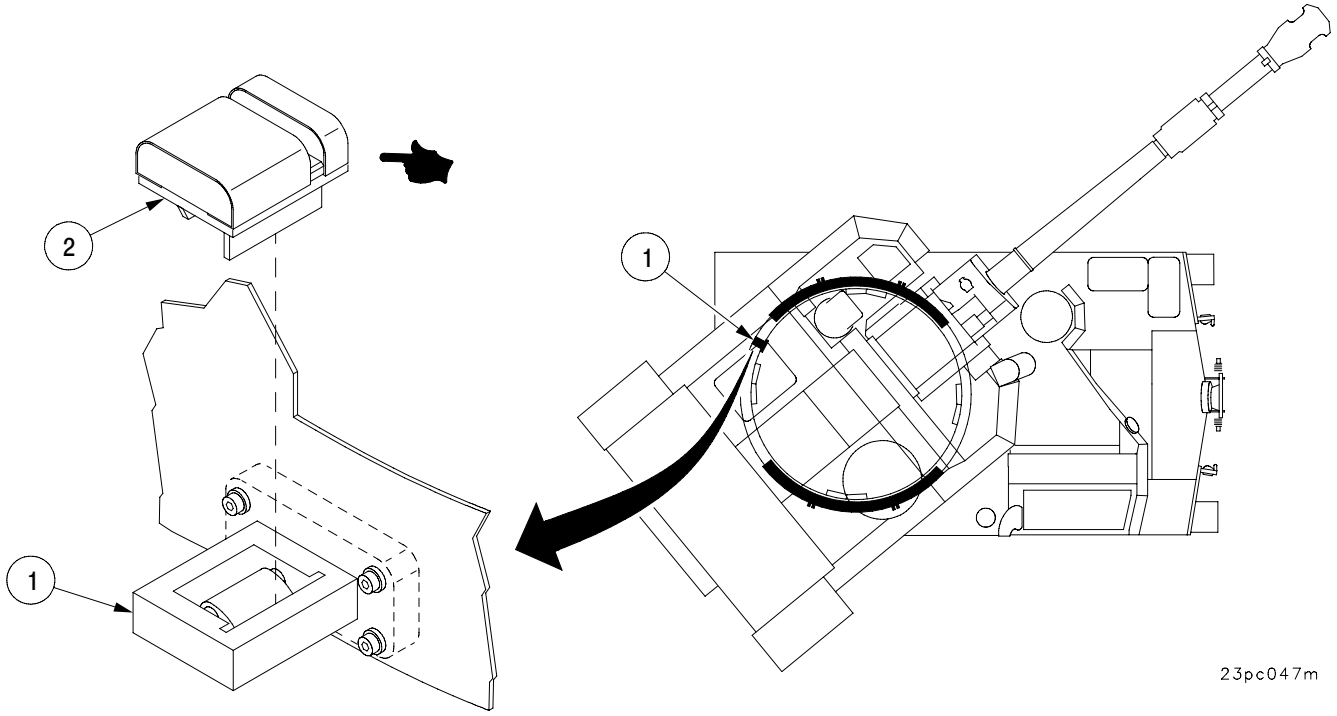

## 3-8 ARMAMENT AND CAB MAINTENANCE - CONTINUED

### 3-8.17 Slip Ring Segment Board Assembly Cleaning - Continued

k. Remove two socket head screws (4) and block (5) from base plate bracket (6).

l. Deleted.

m. Inspect velcro strips (7). If no longer serviceable, notify unit maintenance.

n. Cut two new cleaning pads (7.1) (item 33, Appx D), one pad 2.46" wide by 7" long, one pad .88" wide by 7" long.

o. Install two new cleaning pads (7.1) to block (5).

p. Install block (5) to base bracket (6) with two socket head screws (4).

q. Spray isopropyl alcohol (item 1, Appx D) on the cleaning pads (7.1). Install the cleaning block (2) on the SBCM (1).

r. Use the handwheel to manually traverse the cab until the SBCM (1) is positioned under the ramp at the start of the left segment board (8).

**NOTE**

Applying excessive force at the SBCM handle will cause rapid wear and/or tearing of the cleaning pads, resulting in the need to replace the cleaning pads more frequently.

s. Rotate the SBCM handle (9) clockwise to raise the cleaning block (2) against the segment board (8). Hold the handle with medium force.

t. With the cleaning block (2) held against the segment board (8), use the handwheel to manually traverse the cab through the length of the segment board (8).

u. Release the SBCM handle (9) to lower the cleaning block (2).

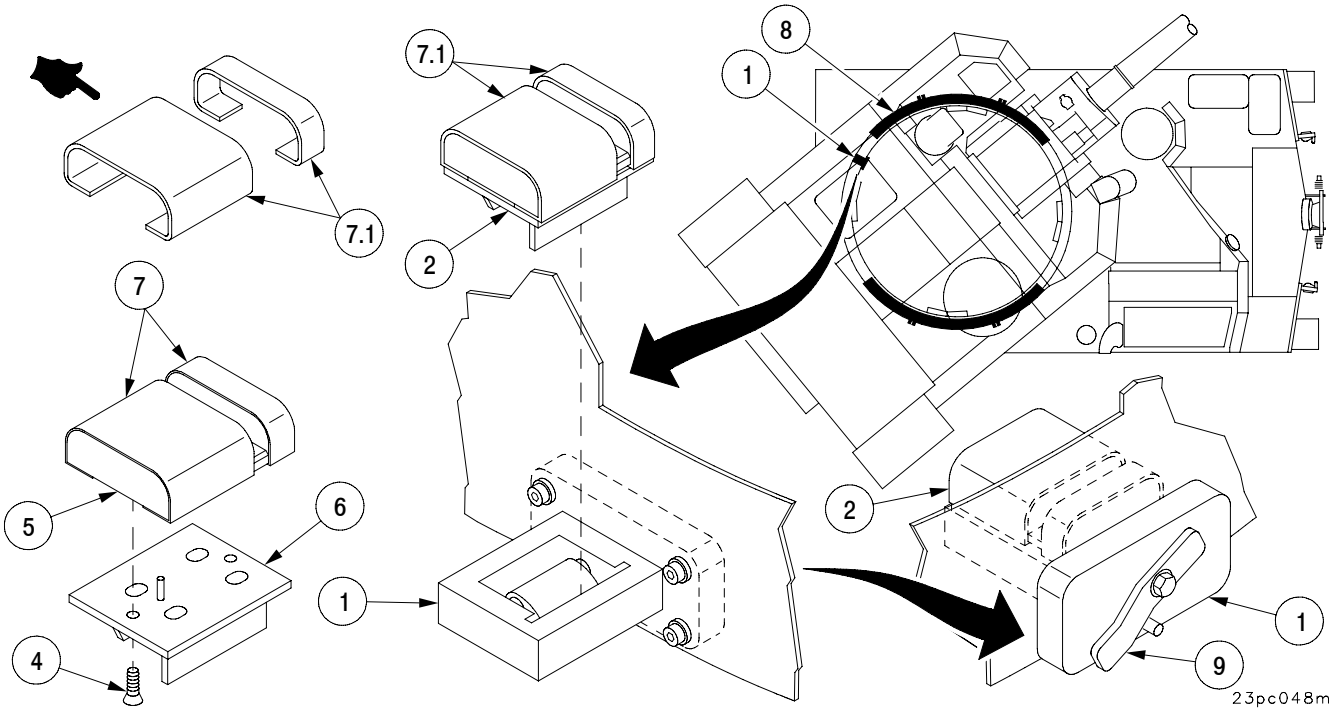

## 3-8 ARMAMENT AND CAB MAINTENANCE - CONTINUED

### 3-8.17 Slip Ring Segment Board Assembly Cleaning - Continued

v. Hand traverse the cab to gain access to the cleaning block (2) near the entrance to the driver's compartment.

w. Repeat steps j through u for the right segment board (10).

x. Inspect the segment boards (8 and 10) and repeat cleaning procedure as needed.

x.1 Remove cleaning block (2) from the SBCM (1).

x.2 Remove two socket head screws (4) and block (5) from base plate bracket (6).

x.3 Remove and discard two cleaning pads (7.1) from block (5).

x.4 Inspect velcro strips (7). If no longer serviceable, notify unit maintenance.

x.5 Install block (5) to base plate bracket (6) with two socket head screws (4).

x.6 Install the cleaning block (2) in the SBCM (1) for storage.

y. Check function of electrical components to determine whether cleaning procedure corrected problems.

z. If problems still exist, notify unit maintenance.

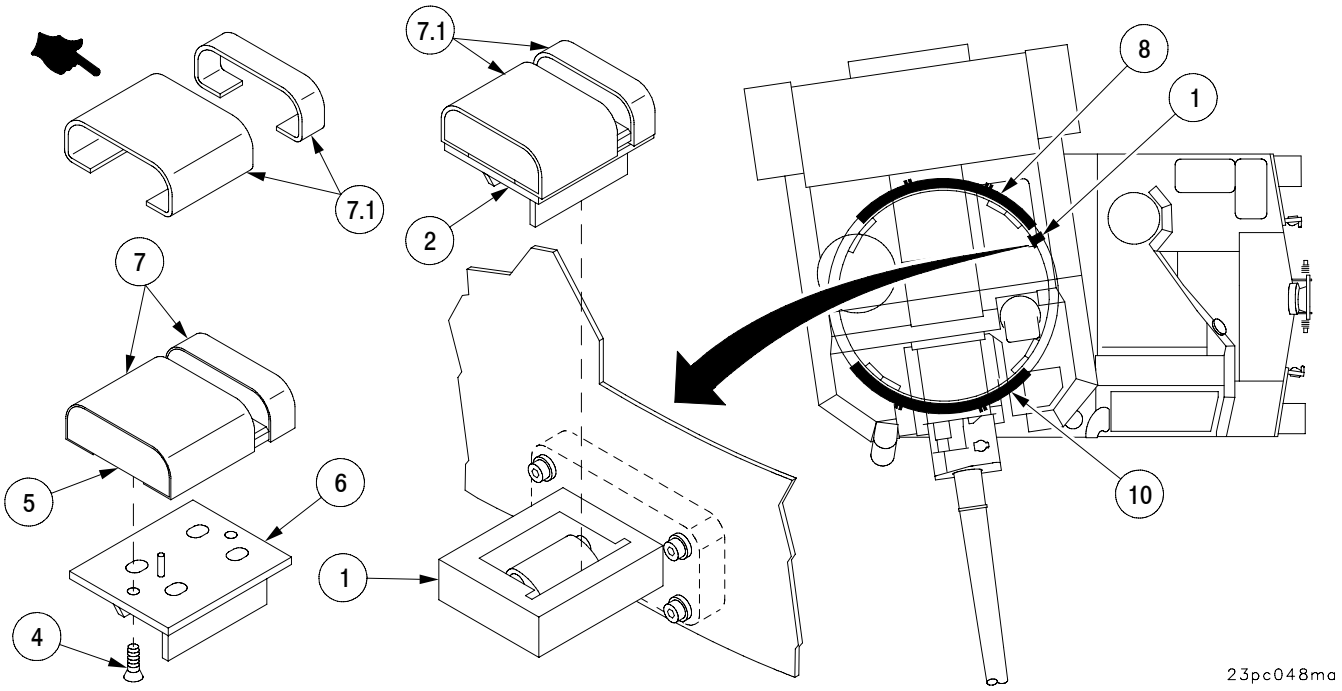

## 3-9 FIRE CONTROL ALIGNMENT TESTS AND MEASUREMENTS.

Fire control alignment tests are performed by the section crewmembers under the supervision of the battery executive officer, chief of firing battery, and artillery mechanic. These tests are performed at the discretion of the unit commander. Suggested intervals for these tests are:

a. Once each year if the cannon is used for non-firing training.
b. Once every 3 months if the cannon is fired.
c. As soon as possible after extensive use.
d. Following accidents.
e. After traveling over extremely rough terrain.
f. When fire control mounts have been replaced.
g. Whenever cannon fires inaccurately for no apparent reason.
h. Whenever gun tube or cannon is replaced.

### 3-9.1 Equipment Required For Fire Control Alignment Tests.

a. Three 10-ton jacks.
b. A cord at least 22 feet long with an object that weighs at least 1/2 lb tied to the end.
c. Muzzle crosshairs.
d. Gunner's quadrant.
e. Test target.
f. Three to five-gallon container of waste oil or water.
g. Three-inch screwdriver for boresighting PANTEL.
h. Bucket (three to five gallon capacity).

### 3-9.2 Preparation For Fire Control Alignment Tests.

a. Emplace the weapon on as firm and level ground as is possible. Use hard stand if one is available.
b. Check the M117A2 PANTEL and the M145A1 telescope mount for looseness or other obvious defects. Make sure M117A2 PANTEL is securely mounted using both latches. Make sure M140/M140A1 alignment device is securely mounted in front of PANTEL ballistic cover.
c. Inspect the gunner's quadrant shoes for dirt or burrs. If necessary, clean shoes with wiping rag (item 37, Appx D). If burrs are present, notify unit maintenance.
d. Perform gunner's quadrant micrometer test (para 3-10.1) and end-for-end test (para 3-10.2).
e. Level trunnions (para 3-10.3).
f. Zero tube.

**NOTE**

If you're not sure about the stability of the cannon assembly (tube drop), make the following check:

(1) Using gunner's quadrant, place tube at +266 mils.

(2) Turn off cab power switch and wait one hour.

(3) Tube should not have moved more than 1.5 mil. If greater, notify unit maintenance.

g. Boresight weapon (para 2-16.5).

# 3-10 TESTING PROCEDURES FOR FIRE CONTROL ALIGNMENT.

## 3-10.1 Gunner's Quadrant Micrometer Test.

**NOTE**

Inspect breech quadrant seats and quadrant shoes before performing tests.

a. Set index arm (1) at plus 10.

b. Zero the micrometer knob (2).

c. Place gunner's quadrant on elevation seats on breech with line of fire arrow toward muzzle.

d. Depress/elevate tube to center bubble (3).

e. Set index arm (1) at zero.

f. Set micrometer knob (2) at 10.

g. Point quadrant with line-of-fire arrow toward muzzle.

**NOTE**

If bubble does not recenter, the micrometer is in error. The quadrant should be turned in to maintenance for repair.

h. Bubble (3) should center. If bubble (3) centers, test is complete. Proceed to end-for-end test.

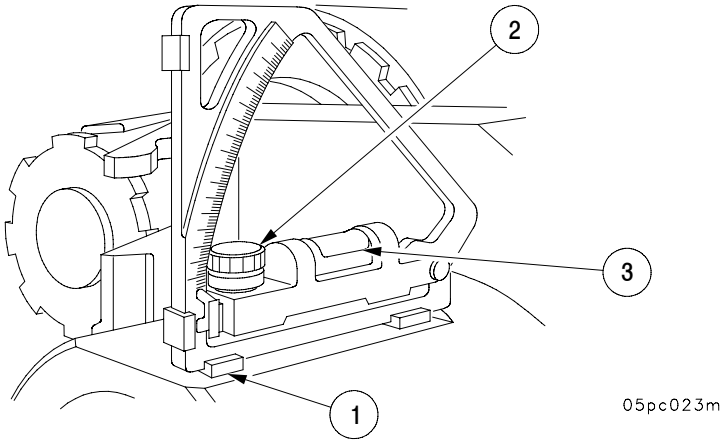

# 3-10 TESTING PROCEDURES FOR FIRE CONTROL ALIGNMENT - CONTINUED

## 3-10.2 Gunner's Quadrant End-For-End Test.

### NOTE

Inspect breech quadrant seats and quadrant shoes before performing tests.

In tolerance ± 0.4. Anything greater is NOT acceptable.

a. Zero the index arm (1) and micrometer scale (2).

b. Place gunner's quadrant on elevation seats on breech with line of fire toward muzzle.

c. Depress/elevate tube to center bubble (3).

d. Reverse direction of quadrant.

e. Bubble (3) should center. If bubble (3) does not center, go to step f.

f. Center bubble (3) with micrometer knob (4). If bubble (3) centers, go to step g. If it does not, go to step n.

g. Read black figures on micrometer scale (2). Divide micrometer scale (2) reading by 2 to determine correction factor.

h. Put correction factor on micrometer scale.

i. Point quadrant with line of fire toward muzzle.

j. Depress/elevate tube to center bubble (3).

k. Reverse direction of quadrant.

l. Bubble (3) should center. If it does, test is complete.

m. Record gunner's quadrant correction on the front of the gunner's quadrant carrying case or in accordance with unit SOP.

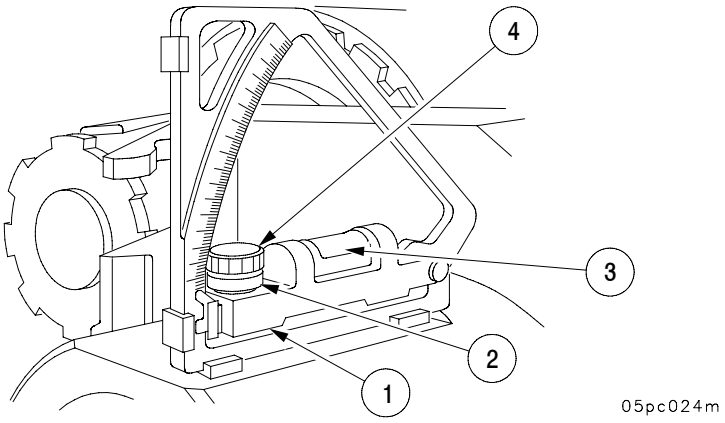

# 3-10 TESTING PROCEDURES FOR FIRE CONTROL ALIGNMENT - CONTINUED

## 3-10.2 Gunner's Quadrant End-For-End Test - Continued

n. Set index arm (1) at minus 10.0.

o. Center bubble (3) with micrometer knob (4).

p. Add micrometer knob (4) reading to 10.0.

q. Divide step p answer by 2. This is your trial correction.

r. Place answer on micrometer scale (2).

s. Point quadrant toward muzzle.

t. Depress/elevate tube to center bubble (3).

u. Reverse direction of quadrant.

v. Bubble (3) should center. If not, go back to step n.

w. Subtract micrometer scale (2) reading from 10.0. Since this is a negative correction (step n), a minus sign must be placed in front of the correction factor.

x. Record gunner's quadrant correction on the front of the gunner's quadrant carrying case or in accordance with unit SOP.

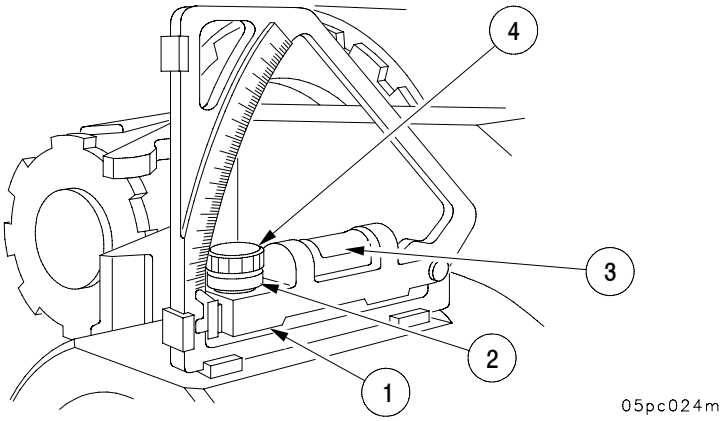


## 3-10.3 Leveling the Trunnions Using the Plumbline.

**NOTE**

Trunnions must be leveled to ensure the fire control equipment mounts are parallel with the tube. There are two ways to level trunnions: plumbline method and scribe mount method.

a. Using fibrous twine (item 41, Appx D), attach at witness marks.

# 3-10 TESTING PROCEDURES FOR FIRE CONTROL ALIGNMENT - CONTINUED

## 3-10.3 Leveling the Trunnions Using the Plumbline - Continued

b. Remove firing mechanism (1) and use primer chamber (2) as rear sight.

c. Suspend plumbline with weight attached at a location where there is little or no wind. The plumbline must be high enough (22 ft) to elevate tube to 600 mils.

d. Place the weight in waste oil or water.

e. Position weapon so that tube is within 12 inches of the plumbline.

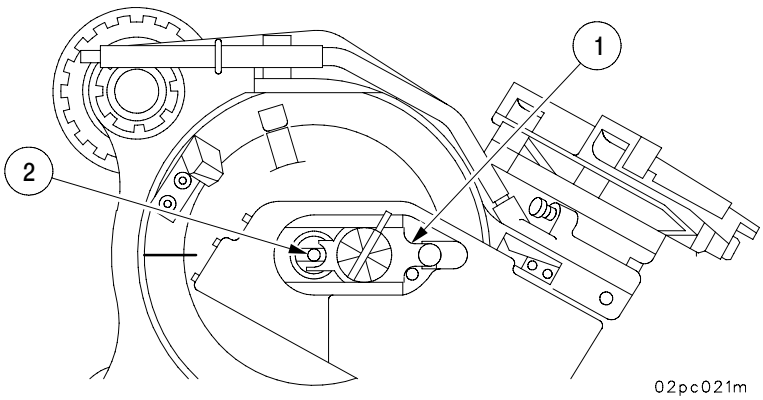


### NOTE

- Use jacks with capacity of 10 tons or better. Insure hydraulic jacks do not leak. This will make test inaccurate.
- Use block of wood at least 1 inch thick between jack and pintle bracket.
- ALTERNATE METHOD: One jack may be placed under center and front of vehicle. Two jacks may be placed under left and right rear sides of vehicle.

# 3-10 TESTING PROCEDURES FOR FIRE CONTROL ALIGNMENT - CONTINUED

## 3-10.3 Leveling the Trunnions Using the Plumbline - Continued

f. Install two jacks (5) under the left and right front sides under 1 inch pads. Raise jacks until they support a load.

g. Install jack (5) in center and rear of vehicle with rear edge of jack pad under pintle bracket.

h. Release tube travel lock (para 2-8.19) and cab traverse lock (para 2-8.21).

i. Turn on M145A1 mount lights.

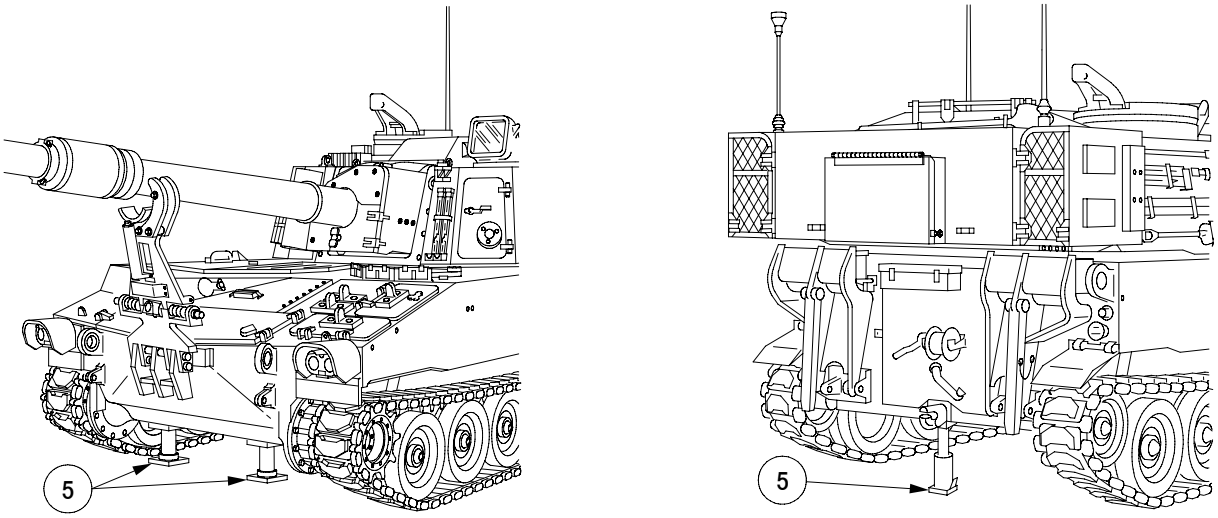


02pc051m

j. Manually position the tube at approximately zero elevation.

k. Look through the primer hole and have someone manually traverse the tube until the vertical crosshair on the muzzle is aligned next to the plumbline. If you have to traverse more than 100 mils left or right, reposition the weapon or the plumbline.

l. If crosshair is misaligned right, have someone jack up the right front jack (or right rear) until you see proper alignment. The tube may have to be manually traversed to re-align the vertical crosshair on the plumbline.

m. If crosshair is misaligned left, have someone jack up the left front jack (or left rear) until you see proper alignment. The tube may have to be manually traversed to re-align the vertical crosshair on the plumbline.

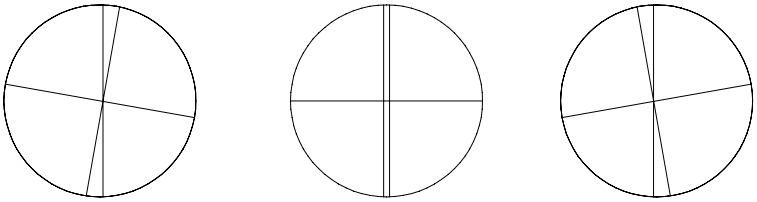


02pc052m

## 3-10 TESTING PROCEDURES FOR FIRE CONTROL ALIGNMENT - CONTINUED

### 3-10.3 Leveling the Trunnions Using the Plumbline - Continued

n. Cross-level the M145A1 mount. Set off 100 mils on the elevation counter and elevate the tube manually until the pitch bubble centers.

o. Look through the primer hole and check for proper alignment. Correct as required (step l or step m).

p. Continue to elevate tube manually in 100 mil increments up to 600 mils, while observing plumbline. Jack the weapon as required to keep vertical crosshair parallel to plumbline.

q. Slowly depress tube to zero mils while observing plumbline. The crosshair should track the plumbline. If it does, the trunnions are level.

r. If it does not track, repeat steps n thru q until the proper alignment is obtained without moving the jacks.

s. If plumbline cannot be tracked, report to unit maintenance.

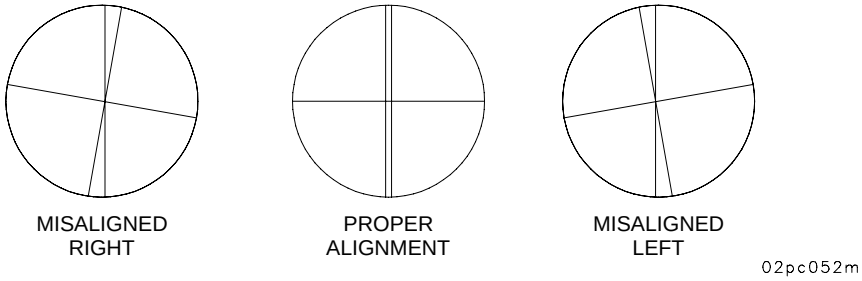


### 3-10.4 Boresighting the Weapon.

Boresight using the test target method (para 2-16.6).

### 3-10.5 Leveling the Tube Using the Gunner's Quadrant.

**NOTE**

Top surfaces of muzzle quadrant seat must be free of paint prior to being used for taking readings with gunner's quadrant.

The cannon has quadrant seats on the top muzzle end of the tube and on the top of the breechring. The embedded correction (the difference between muzzle and breech correction) is measured rather than being stamped on the breech. (Breechblocks that have stamped embedded corrections should be disregarded during tube leveling test).

# 3-10 TESTING PROCEDURES FOR FIRE CONTROL ALIGNMENT - CONTINUED

## 3-10.5 Leveling the Tube Using the Gunner's Quadrant - Continued

a. Place a tested gunner's quadrant on the top surface of muzzle quadrant seat. Apply only the gunner's quadrant correction, if any, and center the bubble by manually elevating or depressing the tube. The tube is now at 0 mils.

b. Move gunner's quadrant to elevation seats on breechring and center the bubble. The difference between 0 mils at muzzle end and the reading taken at breechring is the breech correction.

c. Add gunner's quadrant correction and breech correction; for example:

| | |
|---|---|
| Gunner's quadrant correction | -0.4 |
| breech correction | +1.9 |
| Place on gunner's quadrant | +1.5 |

**NOTE**

- Failure to compensate for breech correction will result in misalignment on weapon being checked.
- The breech correction shall be redetermined when a breech is retubed.

d. Apply the total correction on the gunner's quadrant. Place gunner's quadrant on elevation seats on breech ring and center bubble by elevating or depressing the tube. When the bubble centers, the tube is level.

e. Record the breech correction in the remarks column on DA Form 2408-4 (see example next page). Refer to the breech correction when making elevation settings with the gunner's quadrant.

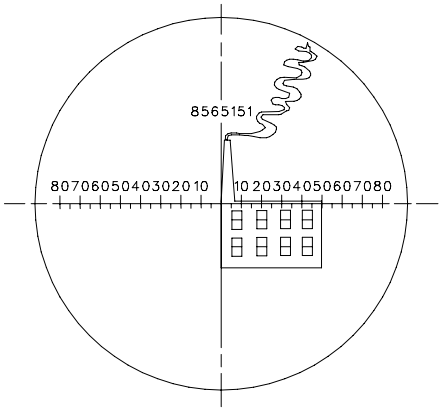


M117A2 RETICLE IMPOSED ON REFERENCE POINT

05pc025m

# 3-10 TESTING PROCEDURES FOR FIRE CONTROL ALIGNMENT - CONTINUED

## 3-10.5 Leveling the Tube Using the Gunner's Quadrant - Continued

BREECH CORRECTIONS & OFFSETS ONLY

C-12

PAL-385

**WEAPON RECORD DATA**

For use of this form, see TM 38-750; the proponent agency is DCSLOG.

*REQUIREMENT CONTROL SYMBOL*
*CSGLD-1051*

1. TUBE SERIAL NO.: 1607T
2. CANNON TYPE, MODEL OR SERIES: 155MM M284
3. ORGANIZATION *(UIC)*: C BTRY 3/41 FA
4. SPECIAL LIFE DATA
5. END ITEM IDENTIFICATION: HOWITZER, MED, S.P., 155MM, M109A6
6. RDS/EFC COMPUTATION
7. CANNON SERIAL NO.: BR 5164
8. RETUBINGS
9. REBUSHINGS

10.

| Date a | Projectile Type b | Zone or Charge c | Rounds Fired d | EFC RDS Fired e | Cumulative RDS Fired f | Cumulative EFC RDS g | Remaining Life (EFC RDS) h | Remarks: Recoil Exercise (RE), Gage or Velocity Reading, Safety Inspection (SI) i | Signature j |
|---|---|---|---|---|---|---|---|---|---|
| *(Previous DA Form 2408-4 final entries)* | | | | | | | | | |
| 4-12-96 | | | | | | | | DRUH MOUNTING<br>PLATE ALIGNED IAW<br>TM 9-2350-314-34-2<br>BREECH CORR = 2.7 MILS<br>EL OFFSET = 0.5 MILS<br>ROLL OFFSET = 0.2 MILS<br>AZ OFFSET = 0.3 MILS | SFC ROCKHARD |

SAMPLE

*CONTINUE ON REVERSE*

DA FORM 1 JAN 79 **2408-4**

EDITION OF 1 DEC 77 WILL BE USED.

BREECH CORRECTIONS & OFFSETS ONLY

## 3-10 TESTING PROCEDURES FOR FIRE CONTROL ALIGNMENT - CONTINUED

### 3-10.6 Testing Reliability of Deflections.

a. Install panoramic telescope M117A2 in mount M145A1 (para 2-10.2).

b. Center the bubbles in the cross-level (1) and pitch-level (2) vials of the panoramic telescope mount M145A1.

c. Set the gunner's aid counters (3) to 0.

**NOTE**

You can make a parallax shield in two ways. Place a pin hole in the center of a dust cap, or mark off a small opening using strips of tape. The idea is to prevent eye movement.

d. Sight on a reference point at least 50 meters away. (If the reference point is less than 50 meters away, you must use a parallax shield.)

e. Record the reading on the azimuth counter (4). Reset the reset counter (5) to 3200.

f. Turn the azimuth deflection knob (6) in a clockwise direction until you have rotated the telescope through two complete revolutions of the head and returned to the reference point.

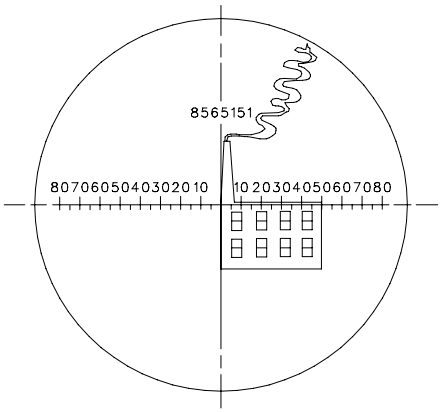


M117A2 RETICLE IMPOSED ON REFERENCE POINT

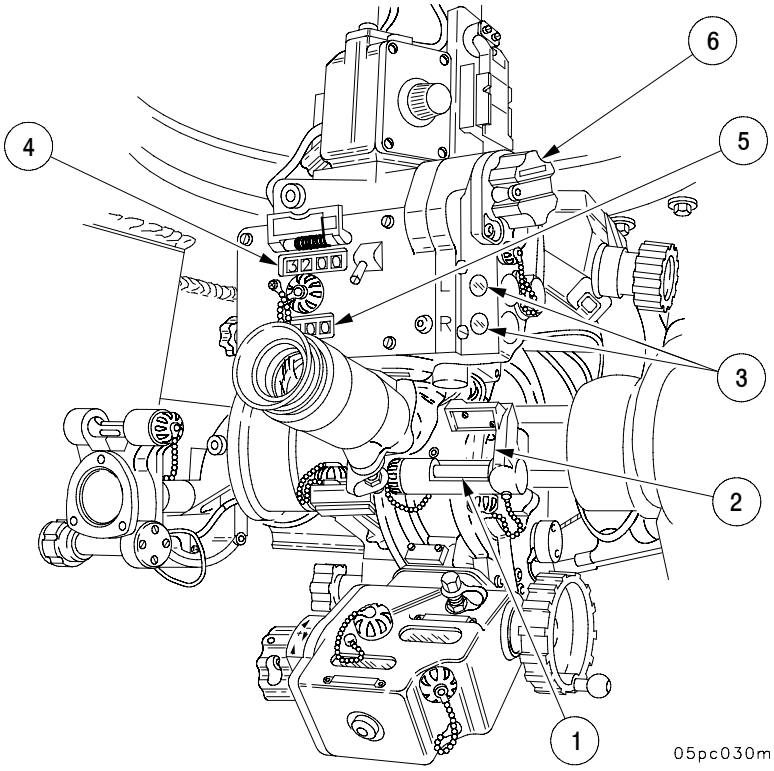

# 3-10 TESTING PROCEDURES FOR FIRE CONTROL ALIGNMENT - CONTINUED

## 3-10.6 Testing Reliability of Deflections - Continued

**NOTE**

If you pass the reference point on the second revolution, rotate the panoramic telescope at least 50 mils in the opposite direction (counterclockwise) and reapproach the reference point from left to right. This is done to eliminate induced backlash.

g. The reading on the azimuth counter (4) should be the same as that recorded at the start of the test within ± 1 mil. If not, notify unit maintenance.

h. The reading on the reset counter (5) should be 6000 ± 1 mil. If not, notify unit maintenance.

i. The reading on the gunner's aid counters (3) should still be at 0. If not, notify unit maintenance

j. If readings do not appear in steps g, h, and i above, the telescope is out of adjustment and should be reported to unit maintenance.

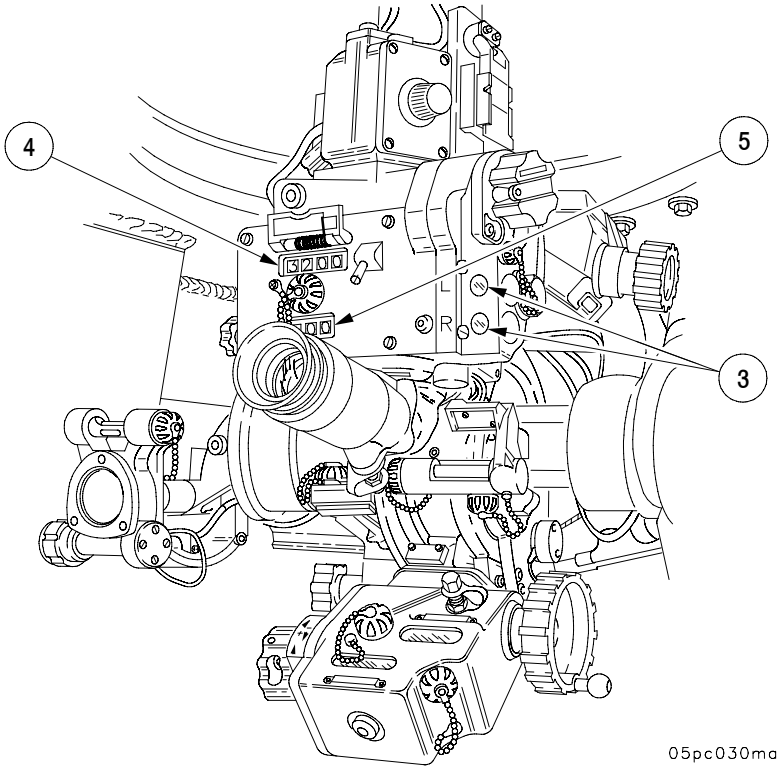

## 3-10 TESTING PROCEDURES FOR FIRE CONTROL ALIGNMENT - CONTINUED

### 3-10.7 Testing Reliability of Special Corrections.

a. Center the bubbles in the cross-level vial (1) and pitch-level vial (2) of the panoramic telescope mount M145A1.

b. Look through the eyepiece and sight on a reference point at least 50 meters away. (If the point is less than 50 meters away, use a parallax shield.)

c. Record the reading on the azimuth counter (3). Reset the reset counter (4) to 3200.

d. Turn the gunner's aid knob (5) to insert 10 mils into the left gunner's aid counter (6).

e. Now check the following:

(1) The line of sight must be on the reference point.

(2) The reading on the azimuth counter (3) should not change by more than 1/4 mil.

(3) The reset counter (4) should be changed by 10 mils.

f. Repeat steps d and e for 20, 30, and 40 mils.

g. Repeat steps d, e, and f using the right gunner's aid counter (7).

h. If checks are not as stated in step e, the telescope is out of adjustment and should be reported to unit maintenance.

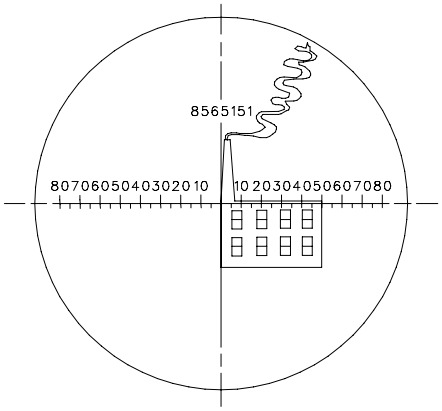


M117A2 RETICLE IMPOSED ON REFERENCE POINT

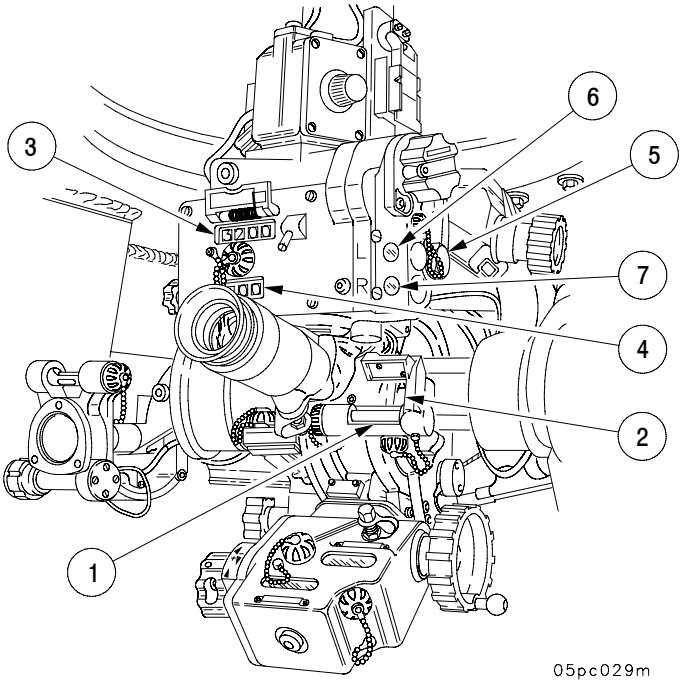

# 3-10 TESTING PROCEDURES FOR FIRE CONTROL ALIGNMENT - CONTINUED

## 3-10.8 Testing Telescope Mount M145A1 (Azimuth Walk-off).

a. Recheck trunnions. They must be level before conducting this test.

**NOTE**

If this test is being performed independently, you must install panoramic telescope M117A2 in mount M145A1, and depress tube to zero mils before doing step b.

b. Center the bubbles in the cross-level vial (1) and pitch-level vial (2).

c. Turn the azimuth deflection knob (3) to place the vertical reticle of the panoramic telescope on any stationary object, at any deflection. Be sure to approach the object from left to right. (If the object is less than 50 meters away, use a parallax shield.) Record the reading on the azimuth counter (4) to the nearest 1/4 mil.

**NOTE**

Be careful not to traverse the tube.

d. Elevate the tube to 400 mils. Center the bubbles in the cross-level vial (1) and pitch-level vial (2) and turn the azimuth deflection knob (3) to realign the vertical reticle on the same stationary object. Make sure you approach the object from left to right. The reading on the azimuth counter (4) must be within ± 1 mil of the reading taken in step c. If not, notify unit maintenance.

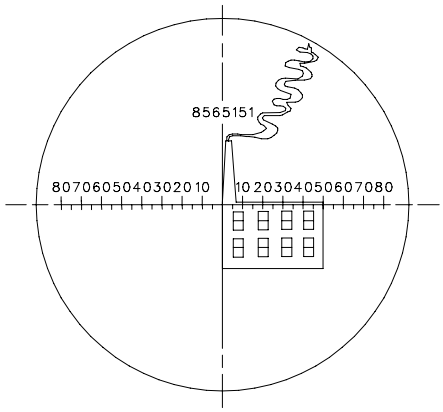


M117A2 RETICLE IMPOSED ON REFERENCE POINT

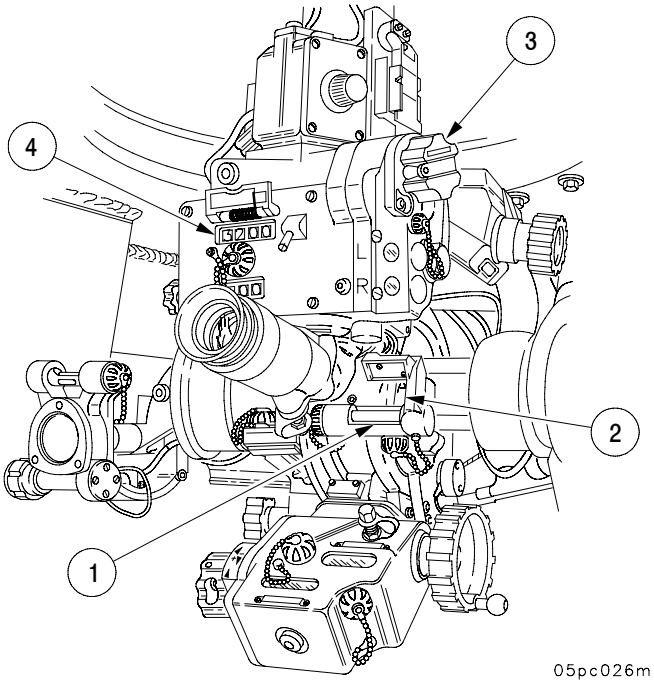

# 3-10 TESTING PROCEDURES FOR FIRE CONTROL ALIGNMENT - CONTINUED

## 3-10.8 Testing Telescope Mount M145A1 (Azimuth Walk-off) - Continued

e. Elevate the tube to 900 mils. Center the bubbles in the cross-level vial (1) and pitch-level vial (2) and realign the vertical reticle (as in step c) on the same stationary object from left to right. The reading on the azimuth counter (4) must be within ± 2 mils of the reading taken in step c. If not, notify unit maintenance.

## 3-10.9 Scribing the M145A1 Mount and Testing.

a. Level trunnions (para 3-10.3).

b. Zero tube using tested gunner's quadrant (para 3-10.5).

c. Center cross-level vial bubble (1) by turning cross-level knob (2).

d. Center pitch-level vial bubble (3) by turning the pitch knob (4).

e. Scribe one line from pitch knob (4) to bracket (5).

f. Scribe another line across from bracket (6) to rocker (7).

g. Align scribe lines on cross-level knob (2) and housing (8) by loosening two screws on cross-level knob (2) and slip aligning index (9) to scribe line on housing (8); retighten two screws on cross-level knob (2).

(1) Remove PANTEL.

(2) Scribe line from housing (10) to body (11) and install PANTEL.

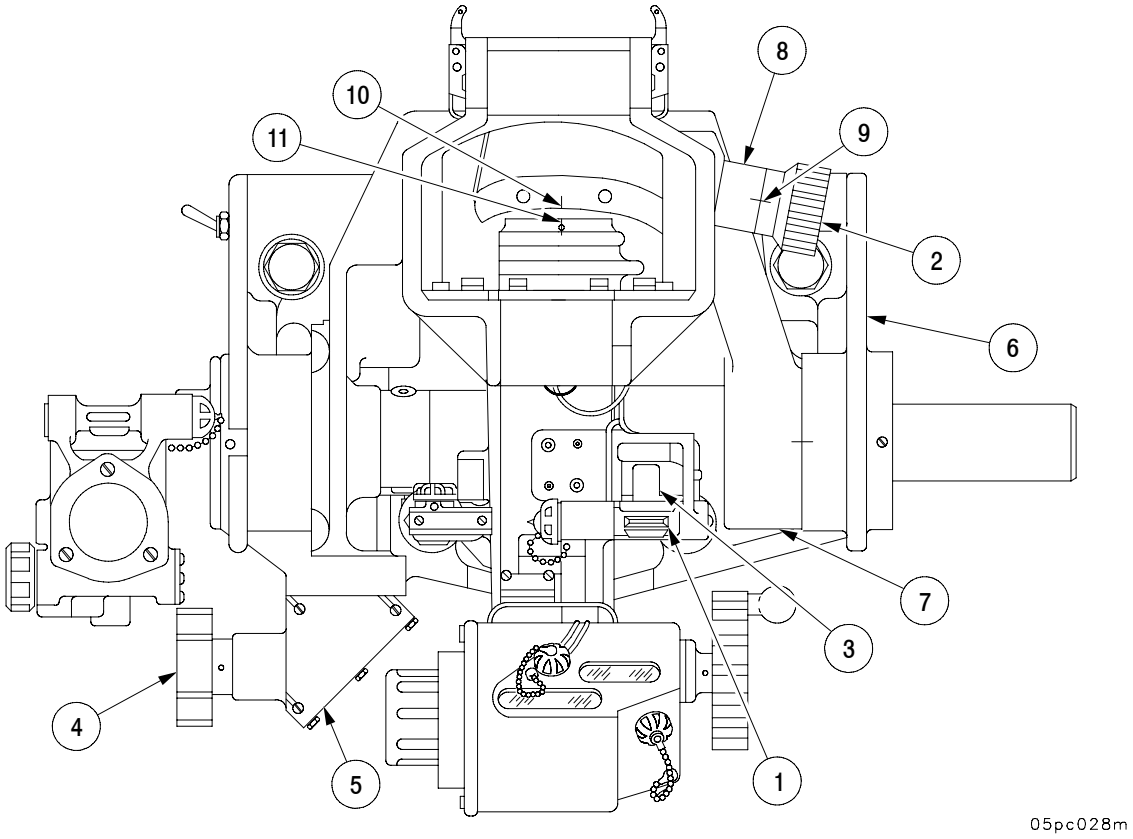

## 3-10 TESTING PROCEDURES FOR FIRE CONTROL ALIGNMENT - CONTINUED

### 3-10.10 Scribe Verification Using the M145A1 PANTEL Mount Check.

a. With the howitzer still on the jacks, level the tube using the gunner's quadrant on the breech seats.

b. On the M145A1 mount, turn the cross-level knob (1) and center the cross-level bubble (2). Turn the pitch knob (3) and center the pitch-level bubble (4).

c. Look through the eyepiece on the PANTEL and turn the azimuth deflection knob (5) to rotate the telescope. Choose a well-defined aiming point, moving the head of the telescope from left to right when choosing the aiming point.

d. Record the reading that is on the azimuth counter (6).

e. Set the quadrant elevation counter (7) to 900 mils and elevate the tube to 900 mils.

f. With the tube at 900 mils elevation, center cross-level vial bubble (2) on the M145A1 PANTEL mount.

g. Look through the eyepiece on the PANTEL again and find the same aiming point. Be sure to move the head of the PANTEL from left to right. If the sight is off to the right of the aiming point, you will have to turn the head of the PANTEL at least 50 mils in the opposite direction and reapproach the reference point from left to right to eliminate any induced backlash.

h. Record the reading that is on the azimuth counter (6).

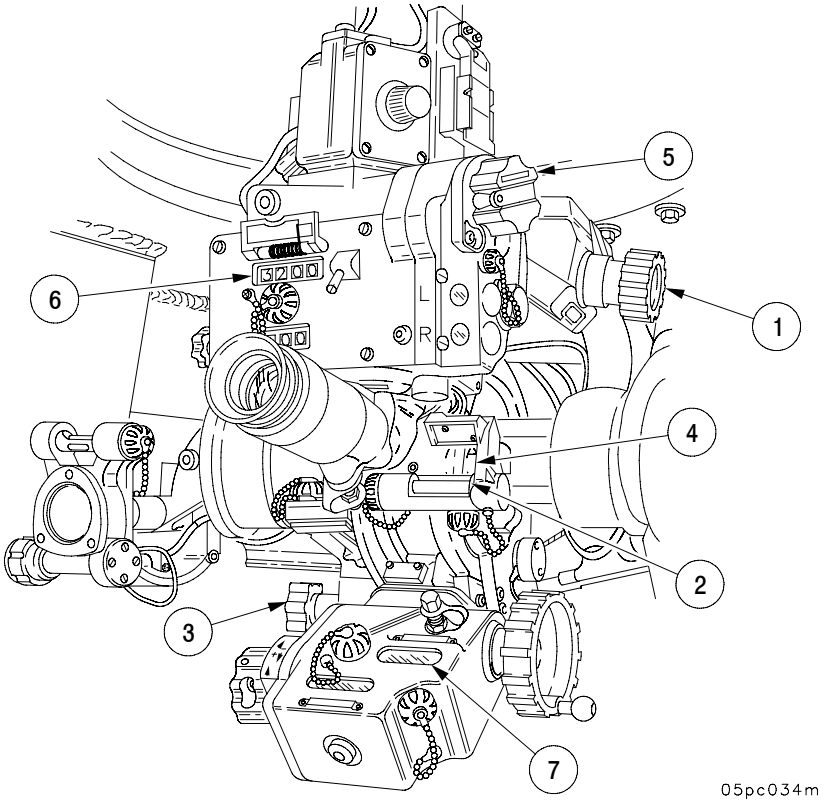

## 3-10 TESTING PROCEDURES FOR FIRE CONTROL ALIGNMENT - CONTINUED

### 3-10.10 Scribe Verification Using the M145A1 PANTEL Mount Check - Continued

**NOTE**

The difference between the two readings taken on the 6400 mil azimuth counter (steps d and h) should not be over ± 1 mil. If it is, you should notify unit maintenance to check the M145A1 PANTEL mount. However, for purpose of this test, the ± 1 mil tolerance is not critical.

i. The difference in the readings on the azimuth counter at zero mil (step d) and 900 mils elevation (step h) is the amount of error in the PANTEL sight mount.

j. Record the amount of error in the PANTEL sight mount in accordance with unit SOP.

### 3-10.11 Testing the Auxiliary Quadrant on M145A1 Mount Using the Gunner's Quadrant.

**NOTE**

Before doing this test, you must level the trunnions. Zero the tube using gunner's quadrant.

a. Place the gunner's quadrant on the breech quadrant seats (1). Apply the gunner's quadrant correction, if any, and the breech correction.

b. Turn the micrometer knob (2) to center the bubble (3) in the gunner's quadrant. The value of the gunner's quadrant should not change more than 0.5 mil. If the value changes more than 0.5 mil, notify unit maintenance.

EXAMPLE: The sum of the gunner's quadrant correction and breech corrections is -0.4. The value of the gunner's quadrant should be between -0.9 and +0.1.

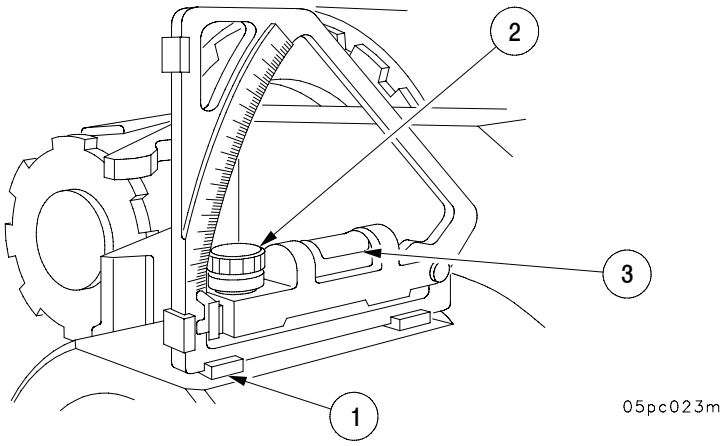

# 3-10 TESTING PROCEDURES FOR FIRE CONTROL ALIGNMENT - CONTINUED

## 3-10.11 Testing the Auxiliary Quadrant on M145A1 Mount Using the Gunner's Quadrant - Continued

c. On the M145A1 mount, turn the cross-level knob (4) and center bubble in the cross-level vial (5).

d. Turn elevation correction knob (6) and zero the correction counter (7).

e. Turn elevation handwheel (8) and center bubble on the elevation level vial (9).

f. Check reading on elevation counter (10). It should read no less than 9999 (-1 mil elevation) and no more than 0001 (+1 mil elevation). If it is not between 9999 and 0001, notify unit maintenance.

g. Zero all counters.

h. Using the M145A1 mount, elevate or depress the tube to zero mils elevation.

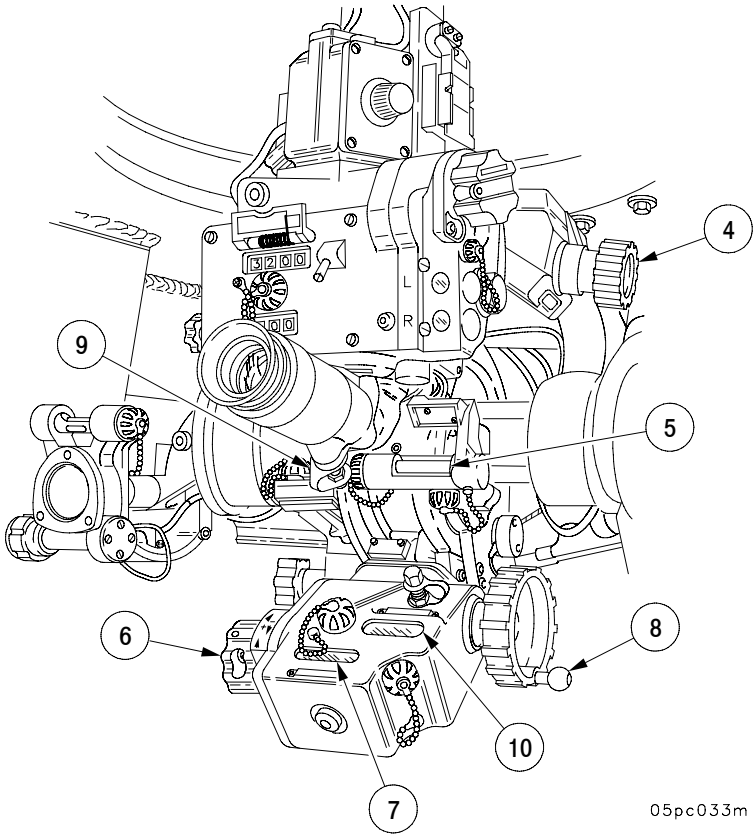

# 3-10 TESTING PROCEDURES FOR FIRE CONTROL ALIGNMENT - CONTINUED

## 3-10.11 Testing the Auxiliary Quadrant on M145A1 Mount Using the Gunner's Quadrant - Continued

i. Set the gunner's quadrant on breech quadrant seats (1). Turn micrometer knob (2) and center bubble (3) in level vial. Record the value on the gunner's quadrant.

j. On the M145A1 mount, turn elevation correction knob (6) to place a +5 mil reading on the elevation counter (10). It should have changed by 5 mils. If it doesn't, notify unit maintenance.

k. On the M145A1 mount, turn the elevation handwheel (8) until elevation counter (10) reads 0.

l. Elevate or depress tube until the pitch-level vial bubble (11) centers.

m. Place +5 mils and the value recorded in step i on the gunner's quadrant. Set the gunner's quadrant back on the breech quadrant seats. The gunner's quadrant bubble (3) should center. If it does not, notify unit maintenance.

n. Zero all counters. Repeat steps h thru m; only this time use a value of -5 mils. If the gunner's quadrant bubble (3) does not center, the correction counter is inaccurate. Notify unit maintenance.

o. Remove the -5 mils from the gunner's quadrant.

p. Using the M145A1 mount, zero the tube.

q. Set the gunner's quadrant on the breech quadrant seats (1). Level the bubble (3) on the gunner's quadrant using the micrometer knob (2). Record the value on the gunner's quadrant.

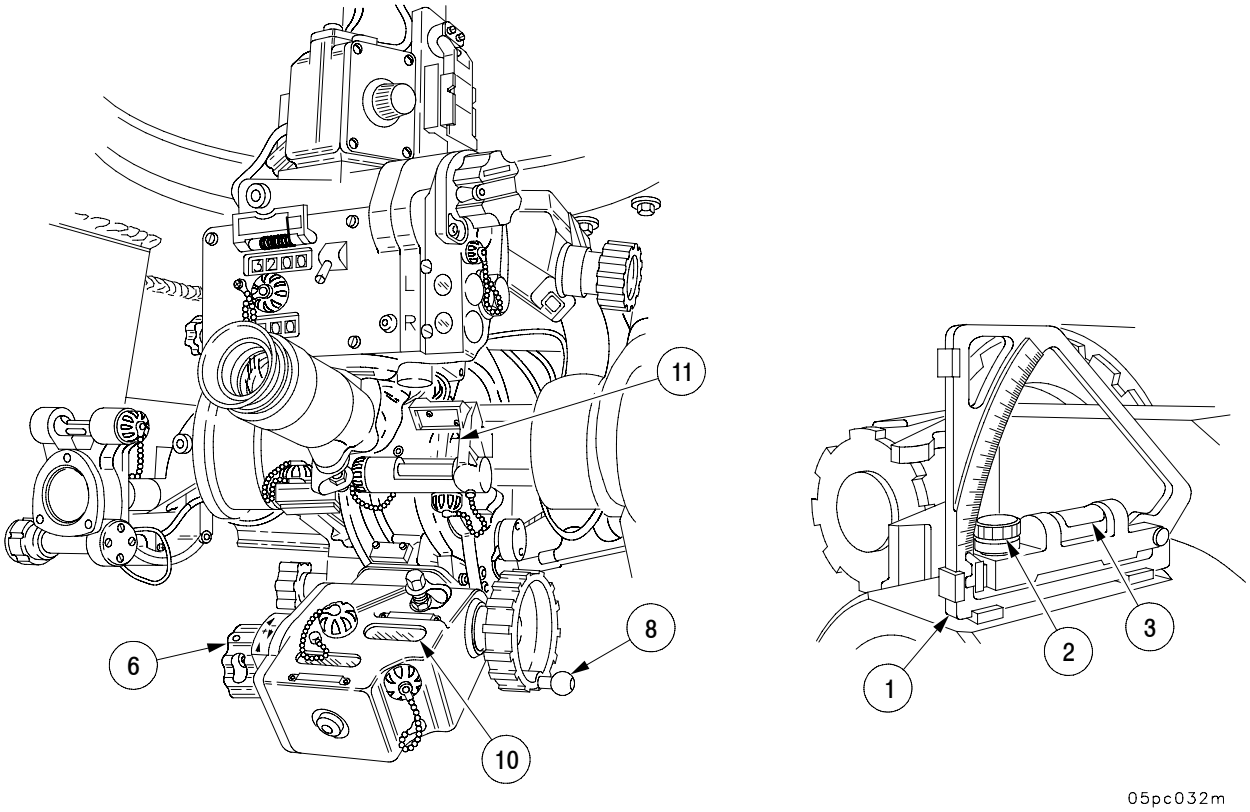

# 3-10 TESTING PROCEDURES FOR FIRE CONTROL ALIGNMENT - CONTINUED

## 3-10.11 Testing the Auxiliary Quadrant on M145A1 Mount Using the Gunner's Quadrant - Continued

r. Using the M145A1 mount, elevate the tube from 0 mil to 400 mils and then to 800 mils. At each elevation, place the elevation counter (10) reading (400, then 800) plus the value recorded in step q on the gunner's quadrant.

EXAMPLE:

| | | |
|---|---|---|
| Elevation placed on elevation counter | 400.0 | 800.0 |
| Value measured in step q at zero elevation | +00.7 | +00.7 |
| Values placed on gunner's quadrant | 400.7 | 800.7 |

s. Set the gunner's quadrant on the breech seats (1). The bubble (3) in the gunner's quadrant should center. If the bubble centers, the test is complete. If the bubble (3) does not center, center it by turning the micrometer knob (2). After centering the gunner's quadrant, read the value now on the counter. It should not have changed more than +0.5 mil from the original reading. If it does, the M145 mount is in error. Notify unit maintenance.

## 3-10.12 Testing the M145A1 Mount Using the Gunner's Quadrant on the Breech Quadrant Seats.

**NOTE**

Before doing this test, you must level the trunnions.
Zero the tube using the tube leveling fixture.

a. Open the breechblock and leave the handle unlocked.

b. Place a gunner's quadrant on the breech quadrant seats (1).

c. Using the micrometer knob (2), apply both the breech correction and the gunner's quadrant correction to the gunner's quadrant.

d. With gunner's quadrant on breech seat and line of fire arrow pointing toward muzzle, elevate or depress the tube until bubble (3) in gunner's quadrant is centered.

e. Secure handle and close breechblock.

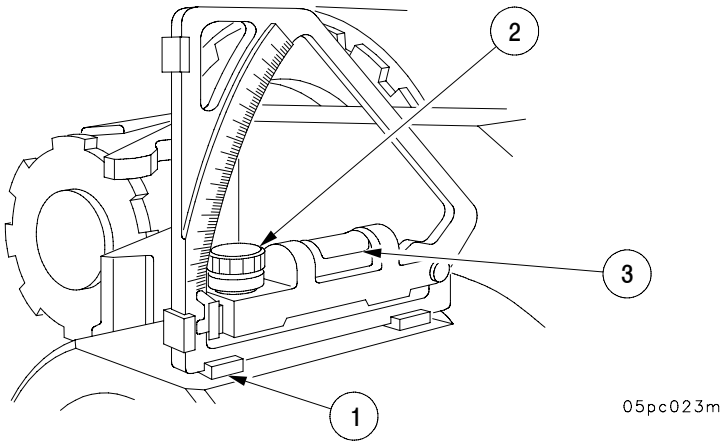

# 3-10 TESTING PROCEDURES FOR FIRE CONTROL ALIGNMENT - CONTINUED

## 3-10.12 Testing the M145A1 Mount Using the Gunner's Quadrant on the Breech Quadrant Seats - Continued

f. On the M145A1 mount, turn the cross-level knob (4) and center bubble in the cross-level vial (5).

g. Turn elevation correction knob (6) and zero the correction counter (7).

h. Turn elevation handwheel (8) and center bubble on the pitch-level vial (9).

i. Using the micrometer knob (2), apply only the gunner's quadrant correction to the gunner's quadrant.

j. Place the gunner's quadrant (1) on the quadrant seat on the left side on the M145A1 mount (10).

k. Cross level the gunner's quadrant seat by turning the quadrant level knob (11) until the bubble in the quadrant cross-level vial (12) is centered.

l. Using the micrometer knob (2), center the bubble (3) in the gunner's quadrant.

m. Read the value on the gunner's quadrant. If the value has changed by more than 0.5 mil, notify unit maintenance.

EXAMPLE: Gunner's quadrant correction is -0.4 mil. The value on gunner's quadrant should be between -0.9 and +0.1 mil.

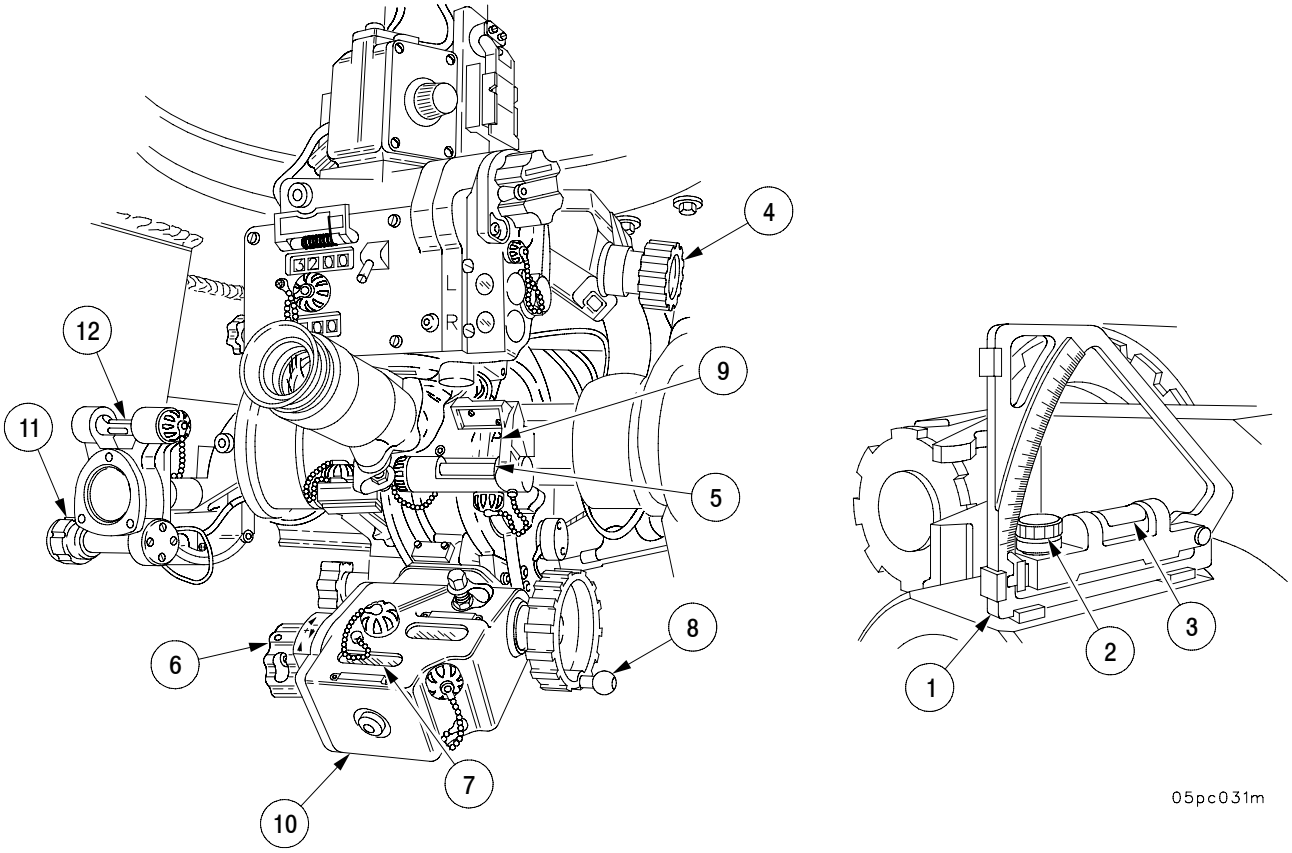

## 3-11 AFCS/PDFCS CONFIDENCE TESTS.

### 3-11.1 Verification of Position and Direction Using Survey Data.

**NOTE**

To perform the direction tests, it is important that the spheroid and grid zone stored in the AFCS/PDFCS map mod are correct for the area of operation. If the AFCS/PDFCS spheroid and grid zone are incorrect, get a correct map mod from BCS (select GET INITIALIZATION on the BCS DATA XFER menu) or enter the correct spheroid and grid zone by selecting ENTER MAP MOD on the SETUP AND INFORMATION menu.

During field training or combat, the position and direction data shown by the AFCS/PDFCS can be checked by using a surveyed location. The built-in-test (BIT) does not fully assure that the AFCS/PDFCS accuracy is within tolerance.

To perform the position test, two carefully surveyed points about 3-4 km apart are required, with an accuracy of 1:1000 or better.

To perform the direction test, there are three options:

- Surveyed orienting station and end of orienting line (OS/EOL). The OS should be at least 100 meters from the howitzer survey point.
- A surveyed azimuth to a distant aiming point (DAP) that is at least 1500 meters away from the survey point. A closer point may be used, but the test will not be as accurate.
- When no survey azimuth is available, a deflection test using the PANTEL is possible.

Perform the tests as follows.

3-11.1.1 Verification of Position Using Survey Points.

a. Initialize the AFCS/PDFCS with the howitzer left front sprocket within one meter of the first survey point. Ensure easting, northing, and altitude match the data posted on the survey marker.

**NOTE**

If a surveyed azimuth to a DAP will be used for a direction test at the second survey point, then the BCS move order should include the azimuth to DAP as the center of sector. If a manual move order is used, first enter the azimuth to DAP as the center of sector on the DEFINE SECTOR OF FIRE menu (select SECTOR OF FIRE from SETUP AND INFORMATION menu). Then by positioning howitzer at second survey point with vehicle heading aligned with center of sector, you will ensure the tube is pointed toward the DAP.

b. After the nav subsystem is fully aligned, receive a move order from BCS (destination INIT POINT) to the second survey point. If BCS is not available, enter a manual move order to the second survey point.

c. Move to the second survey point without stopping.

d. Upon arrival at the survey point, position howitzer with the left front sprocket within one meter of survey point. Wait 30 seconds before proceeding to next step.

# 3-11 AFCS/PDFCS CONFIDENCE TESTS - CONTINUED

## 3-11.1 Verification of Position and Direction Using Survey Data - Continued

3-11.1.1 Verification of Position Using Survey Points - Continued

e. With the STEER TO screen displayed, read and record AFCS/PDFCS position data under POSN (easting, northing, and altitude) and the range to destination (RNG) in the upper right corner of the screen. Subtract the POSN altitude from the DESTN altitude.

f. Compare the data obtained in step e with the following tolerances.

| | |
|---|---|
| RNG | 26 meters or less |
| Altitude Difference | ± 26 meters |

g. If the AFCS/PDFCS data is within tolerance, but the POSN easting, northing, and altitude do not match the survey marker data exactly, then press ARRIVED key and do a NAV POSN UPDATE, using the NAV POSN UPDATE screen from the SETUP AND INFORMATION menu.

h. If AFCS/PDFCS data is within tolerance, position test is complete. Skip the steps below and proceed to the chosen method for testing direction.

i. If the AFCS/PDFCS data is out of tolerance, verify the DESTN easting, northing, and altitude matches the data on the survey marker. If they do not match, record the survey marker data for later use.

j. Press ARRIVED key. Select NAV POSN UPDATE from the SETUP AND INFORMATION menu to enter the survey marker data. Do a NAV POSN UPDATE by pressing the USE ALL key.

k. After the nav subsystem is fully aligned, receive a MOVE ORDER from BCS (or do a manual move order) to the first survey point.

l. Move to the first survey point without stopping.

m. Repeat steps d through f at the first survey point. Record the data and note whether the AFCS/PDFCS is in or out of tolerance.

n. Press ARRIVED key. Select NAV update from the SETUP AND INFORMATION menu to enter the survey marker data. Do a NAV position update by pressing the USE ALL key.

o. After the nav subsystem is fully aligned, receive a move order from BCS (or do a manual move order) to the second survey point.

p. Move to the second survey point without stopping.

q. Repeat steps d through f at the second survey point. Record the data and note whether the AFCS/PDFCS is in or out of tolerance.

r. If the AFCS/PDFCS was out of tolerance two out of three trials, notify unit maintenance.

s. If the AFCS/PDFCS was in tolerance two out of three trials, press ARRIVED key. Select NAV UPDATE from the SETUP AND INFORMATION menu and enter the second survey marker data. Do a NAV POSN UPDATE by pressing USE ALL key. Proceed to the chosen method for testing direction.

3-11.1.2 Verification of Direction Using an OS/EOL.

The AFCS/PDFCS nav subsystem uses gyros to align the system to north. Checks of AFCS/PDFCS direction may be accomplished using survey points and the M2 aiming circle, or a theodolite. Perform the test as follows.

a. Ensure the howitzer is fully initialized and emplaced at the survey point on level ground. Ensure that a NAV POSN UPDATE has been done using the survey marker data.

b. Unstow the tube. Install muzzle crosshairs.

c. Set up and level the aiming circle over the OS.

## 3-11 AFCS/PDFCS CONFIDENCE TESTS - CONTINUED

### 3-11.1 Verification of Position and Direction Using Survey Data - Continued

3-11.1.2 Verification of Direction Using an OS/EOL - Continued

d. Place the azimuth of the Orienting Line (OL) on the aiming circle using the upper (recording) motion.

e. Sight the aiming circle on the EOL using the lower (non-recording) motion.

f. Sight the aiming circle toward the howitzer using the upper (recording) motion.

g. Using the primer vent hole and muzzle crosshairs, align the cannon bore on the aiming circle lens.

h. With the upper (recording) motion of the aiming circle, align the vertical crosshair on the center of the cannon bore. Aiming circle operator announces "NUMBER (SO AND SO) REFER, AIMING POINT THIS INSTRUMENT."

i. Read the azimuth to the cannon bore. This corresponds to the back azimuth of the cannon bore.

j. If the aiming circle azimuth to the tube is greater than 3200, subtract 3200 to obtain tube pointing azimuth. If the aiming circle azimuth to the tube is less than 3200, add 3200 to obtain tube pointing azimuth.

k. Deleted

l. Select DISPLAY FORMAT from the SETUP AND INFORMATION menu. Change display from DEFLECTION to AZIMUTH and press USE ALL key.

m. Select FIRE COMMANDS from the SETUP AND INFORMATION menu. When FIRE COMMANDS menu is displayed, press USE ALL to display a FIRE MISSION screen.

n. Read and record ACTL AZ and QUAD off the FIRE MISSION screen. AFCS/PDFCS operator announces "NUMBER (SO AND SO), AZIMUTH (SO MUCH)".

o. Aiming circle operator compares the readings from steps j and n. If the difference is with ± 2 mils, the aiming circle operator announces "SAFE".

**NOTE**

Quadrant should also be checked with a pretested gunner's quadrant. After adjusting for breech correction, reading should compare within ± 2 mils.

p. AFCS/PDFCS operator compares the readings from steps k and n. If the difference is within ± 2 mils, the direction test is complete. Skip the steps below. Press EOM key on the FIRE MISSION menu to return to the SETUP AND INFORMATION menu. Select DISPLAY FORMAT and change display back to DEFLECTION and press USE ALL key.

q. If either the azimuth or quadrant difference exceeds ± 2 mils, stow tube. Select NAV UPDATE from SETUP AND INFORMATION menu. When NAV UPDATE menu is displayed, check data and correct if necessary. When data is correct, select FORCE NAV RESTART and press USE ALL key to align the nav subsystem.

r. Recheck the aiming circle level and position over the stake.

s. After the nav subsystem if fully aligned, unstow tube and repeat steps d through p.

t. If results are still out of tolerance, notify unit maintenance.

# 3-11 AFCS/PDFCS CONFIDENCE TESTS - CONTINUED

## 3-11.1 Verification of Position and Direction Using Survey Data - Continued

3-11.1.3 Verification of Direction Using an Azimuth to a DAP.

The AFCS/PDFCS nav subsystem uses gyros to align the system to north. Checks of AFCS/PDFCS direction may be accomplished using a survey point and a surveyed azimuth to a DAP at least 1500 meters away. A closer point may be used, but the test will not be as accurate. Perform the test as follows.

a. Ensure the AFCS/PDFCS is fully initialized and the nav subsystem is fully aligned. Ensure the howitzer is positioned with the left front sprocket within one meter of the survey point. Ensure the howitzer is pointed generally toward the DAP.

b. Unstow the tube.

c. Align the cannon bore on the DAP.

d. Deleted

e. Select DISPLAY FORMAT from the SETUP AND INFORMATION menu. Change display from DEFLECTION to AZIMUTH and press USE ALL key.

f. Select FIRE COMMANDS from the SETUP AND INFORMATION menu. When FIRE COMMAND menu is displayed, press USE ALL to display a FIRE MISSION screen.

g. Read and record ACTL AZ and QUAD off the FIRE MISSION screen.

h. Compare the azimuth display on the AFCS/PDFCS (ACTL AZ) with the surveyed azimuth to the DAP. Azimuth should compare within ± 2 mils.

i. Compare the quadrant displayed on the AFCS/PDFCS (ACTL QUAD) with the quadrant elevation off the M145A1 Mount. Quadrant elevation should compare within ± 2 mils.

**NOTE**

Quadrant should also be checked with a pretested gunner's quadrant. After adjusting for breech correction, reading should compare within ± 2 mils.

j. If the results are within tolerance, the test is complete. Skip the steps below. Press EOM key on the FIRE MISSION menu to return to the SETUP AND INFORMATION menu. Select DISPLAY FORMAT and change display back to DEFLECTION and press USE ALL key.

k. If the results are out of tolerance, stow tube. Select NAV UPDATE from SETUP AND INFORMATION menu. When NAV UPDATE menu is displayed, check data and correct if necessary. When data is correct, select FORCE NAV RESTART and press USE ALL key to align the nav subsystem.

l. After the NAV subsystem is fully aligned, unstow tube and repeat steps c through j.

m. If results are still out of tolerance, notify unit maintenance.

## 3-11 AFCS/PDFCS CONFIDENCE TESTS - CONTINUED

### 3-11.1 Verification of Position and Direction Using Survey Data - Continued

3-11.1.4 Verification of Deflection and Quadrant.

If surveyed azimuth data is not available, you can check the AFCS/PDFCS and the PANTEL for a match in deflection and quadrant elevation. To perform this test, a DAP at least 1500 meters away is needed. Perform the test as follows.

**NOTE**

The howitzer may be positioned at a survey point if the position test is also being conducted. However, a survey point is not necessary to perform the deflection and quadrant test alone.

a. Receive a move order from BCS to fire point. If BCS is not available, enter a manual move order to a FIRE POINT.

b. With the EMPLACE FIRE POINT screen displayed, position howitzer with tube pointed generally toward center of sector (base azimuth).

c. Press ARRIVED and unstow tube. Install muzzle crosshairs.

d. Use default value for MAXIMUM TUBE ELEVATION and press USE ALL on the SITE DEFINITION screen. The SECTION IN ORDER AT FIRE POINT screen will be displayed.

e. Using the power control handle, traverse the tube until ACTL DEFL displays 3200 deflection on the SECTION IN ORDER screen (this is the center of sector or base azimuth).

**NOTE**

If there is no FPF or priority fire mission on the screen, you may press the LOAD key to traverse the tube to 3200 deflection. Ensure that ACTL DEFL remains on 3200 deflection when you release the LOAD key. Adjust with power control handle, if necessary.

f. Check boresight of PANTEL with M140/M140A1 alignment device.

g. Select a DAP that is at least 1500 meters away.

h. Using the Azimuth deflection knob, align the vertical hairline of the PANTEL on the DAP. Level the pitch and cross level bubbles and check alignment.

i. Rotate counter rest knob on PANTEL until 3200 appears on reset counter.

j. Using the primer vent hole and muzzle crosshairs, align the tube on the DAP.

k. Level pitch and cross level bubbles on PANTEL mount. Using the azimuth deflection knob, align vertical hairline of PANTEL on the DAP. Record PANTEL deflection reading.

l. Center elevation level vial on M145A1 mount. Record M145A1 quadrant reading.

m. Read and record the ACTL deflection (DEFL) and quadrant (QUAD) obtained on the PDFCS SECTION IN ORDER screen.

n. Compare deflections and quadrants obtained in steps k, l, and m. The tolerance between readings is ± 2 mils for both deflection and quadrant.

o. If AFCS/PDFCS and PANTEL agree within the tolerance, the test is complete. Skip the step below.

p. If AFCS/PDFCS and PANTEL do not agree with the tolerance, notify unit maintenance.

## 3-11 AFCS/PDFCS CONFIDENCE TESTS - CONTINUED

### 3-11.2 Testing the Accuracy of the AFCS/PDFCS Elevation.

**NOTE**

Before performing this test, ensure that the cannon assembly is properly equilibrated (para 3-8.2) to prevent tube elevation drift.

The AFCS/PDFCS elevation accuracy should be tested whenever the trunnions have been leveled for optical fire control alignment test and measurements. It is suggested that a survey point be put in at the location of these tests for the purpose of proper initialization of the AFCS/PDFCS.

This test is used to verify the AFCS/PDFCS quadrant elevation and gunner's quadrant agree at all elevations. Perform the test as follows.

a. Initialize the AFCS/PDFCS with the tube stowed in the travel lock.

b. When the Nav Subsystem is fully aligned, unstow tube, and recheck trunnion level using a plumbline.

c. Level the tube using a pretested gunner's quadrant on the machined surface just rear of the muzzle brake. Set the gunner's quadrant on the top (widest) surface with the feet aligned with the machined shoulder.

d. With the tube held at the level position, place the gunner's quadrant on the breech elevation seats. Measure and record breech correction.

e. Select FIRE COMMANDS from the SETUP AND INFORMATION menu. When FIRE COMMANDS menu is displayed, press USE ALL to display a FIRE MISSION screen.

f. Read and record ACTL QUAD on the FIRE MISSION screen. QUAD should be zero mils ± 0.5 mils.

g. If ACTL QUAD is not within tolerance, notify unit maintenance.

h. Set the scale of the gunner's quadrant to 100 mils plus the sum of the gunner's quadrant correction and the breech correction.

i. Place the gunner's quadrant on the breech seats. Elevate the tube (power or manual) until the bubble is centered.

j. Read and record the ACTL QUAD on the FIRE MISSION screen. If the difference between the ACTL QUAD and the tube elevation exceeds ± 0.5 mils, verify all settings. Record the difference.

k. Repeat steps h through j, adding 100 mils elevation each time, until maximum elevation is reached. Then decrease elevation in 100 mil increments and repeat measurements.

l. Compare all differences to the tolerance of ± 0.5 mils. If the reading at any elevation exceeds the tolerance, notify unit maintenance.

# CHAPTER 4

# MAINTENANCE OF AUXILIARY EQUIPMENT

## 4-1 GENERAL.

Information on maintenance of the auxiliary equipment listed is provided in the following technical manuals:

| | |
|---|---|
| Viewer, Driver's Night Vision, AN/VVS-2(V)4 | TM 11-5855-249-10 |
| Machine Gun, Cal. 50, M2 | TM 9-1005-213-10 |
| Mask, Protective, M25A1 | TM 3-4240-280-10 |
| Muzzle Velocity Sensor, M93 | TM 9-1290-365-14&P |
| Intercommunication Set | TM 11-5830-340-12 |
| Mounted Water Ration Heater | TM 10-7310-241-12&P |
| Precision Lightweight GPS (Global Positioning System) Receiver (PLGR) AN/PSN-11 | TM 11-5825-291-13 |
| Vehicular Intercommunications System, AN/VIC-3(V)-6 | TM 11-5830-263-10 |
| Defense Advanced GPS (Global Positioning System) Receiver (DAGR) AN/PSN-13 | TM 11-5820-1172-13 |
| Enhanced Portable Inductive Artillery Fuze Setter (EPIAFS) | TM 9-1290-211-13&P |

## 4-2 REMOVING/INSTALLING M45 PERISCOPE.

a. Loosen two wingnuts (1) to release two lock supports (2).

b. Remove M45 periscope (3).

c. Install M45 periscope (3) in two lock supports (2).

d. Secure lock supports (2) by tightening two wingnuts (1).

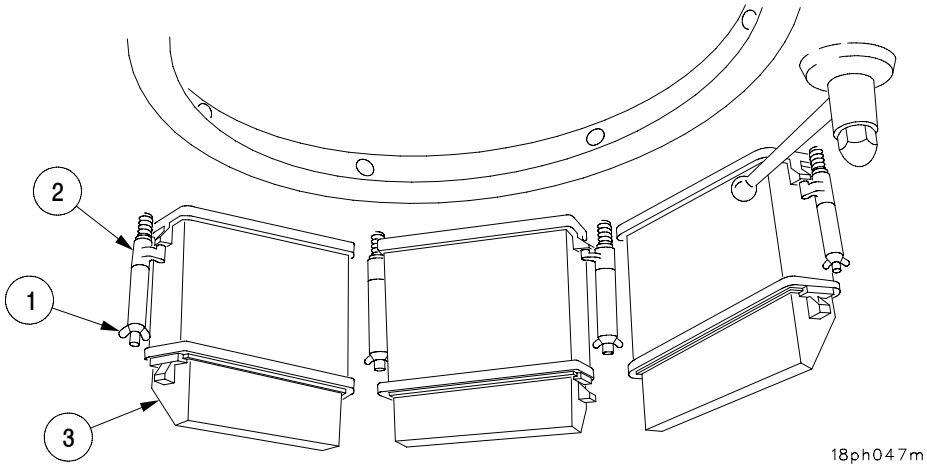


## 4-3 REMOVING/INSTALLING M27 PERISCOPE.

a. Pull and turn two retainers (1).

b. Remove M27 periscope (2).

c. Install M27 periscope (2) and secure with two retainers (1).

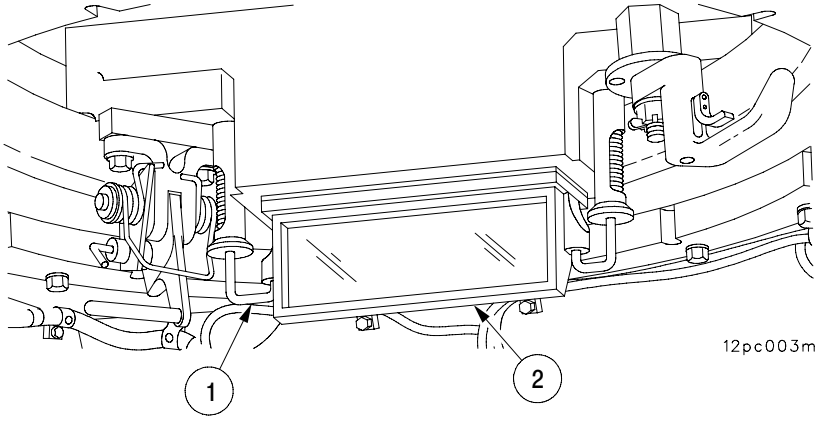

## 4-4 REMOVING/INSTALLING NIGHT VIEWER AN/VVS-2(V)4.

### 4-4.1 Removing Night Viewer.

**WARNING**

- Phosphorus material on inside of night viewer is toxic if tube is broken. Be careful not to inhale or allow contact with open skin wounds or with mouth.
- Battery BA-1567/U used in equipment may explode if overheated. Do not operate night viewer on battery when the power cable is attached. This may cause power battery to overheat.
- Battery BA-1567/U uses mercury, which is harmful to the environment. Do not discard batteries. Turn in defective batteries for proper disposal.

**CAUTION**

- Be sure steering wheel is in down position. Night viewer cannot be removed or installed with steering wheel in up position.
- Do not remove protective cover in daylight or bright night. Image tube can be damaged from bright light entering night viewer, even when equipment is off or unplugged.

# 4-4 REMOVING/INSTALLING NIGHT VIEWER AN/VVS-2(V)4 - CONTINUED

## 4-4.1 Removing Night Viewer - Continued

a. Turn operator's control (1) to OFF.

b. Install plastic eyepiece cover.

c. Disconnect power cable from receptacle.

d. Loosen two wingnuts (2) and support night viewer (3) while turning two supports (4) to release night viewer (3).

e. Remove night viewer (3) and install protective cover.

**CAUTION**

Remove batteries during long-term stowage of night viewer assembly (TM 11-5855-249-10).

f. Return night viewer (3) to its stowage position in the night viewer stowage bracket.

g. Remove M45 periscope from its stowage bracket and reinstall in center opening.

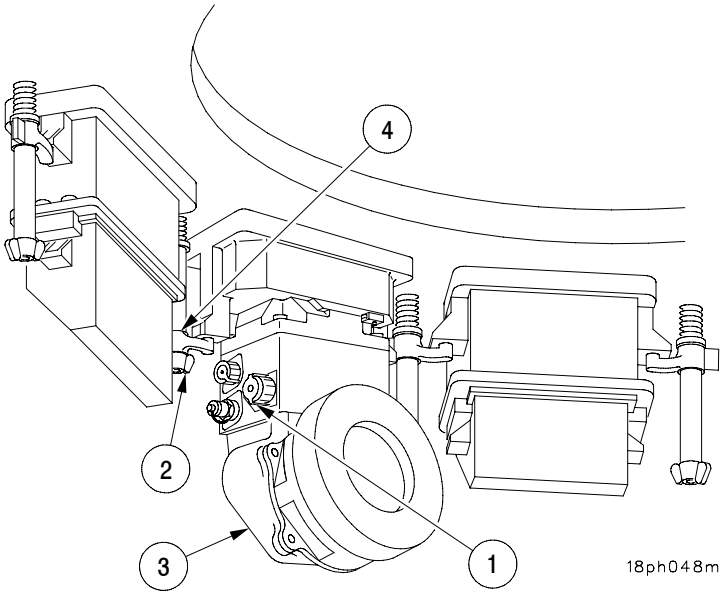

## 4-4 REMOVING/INSTALLING NIGHT VIEWER AN/VVS-2(V)4 - CONTINUED

### 4-4.2 Installing Night Viewer.

a. Place steering wheel in down position.

b. Remove center M45 periscope and secure in M45 periscope bracket.

c. Remove protective cover from night viewer assembly (3).

d. Remove battery from night viewer (3) (TM 11-5855-249-10).

e. Insert night viewer (3) into periscope opening.

f. Turn two supports (4) under night viewer mounting plate.

g. Secure two wingnuts (2).

**NOTE**

- Power cable is stowed at left side of dome light bracket.
- If power cable is defective, night viewer may be operated by battery. Notify unit maintenance of defective cable.

h. Turn operator's control (1) to OFF position.

i. Connect power cable to receptacle on night viewer (3).

j. Remove plastic cover from eyepiece. Stow cover in convenient location.

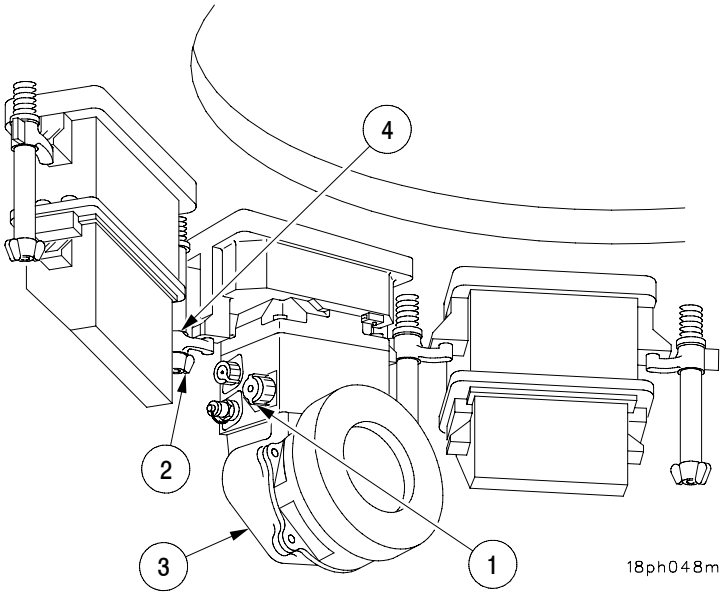

## 4-5 REMOVING/INSTALLING MOUNTED WATER RATION HEATER (MWRH).

### 4-5.1 Removal.

a. Disconnect electrical connector (1) from heater (2).

b. Unbuckle strap webbing (3) from heater (2).

c. Loosen three wing nuts (4) securing heater (2) to mounting bracket (5).

d. Remove heater (2) from mounting bracket (5).

### 4-5.2 Installation.

a. Position heater (2) on mounting bracket (5).

b. Tighten three wing nuts (4) to secure heater (2) to mounting bracket (5).

c. Buckle strap webbing (3) around heater (2).

d. Connect electrical connector (1) on heater (2).

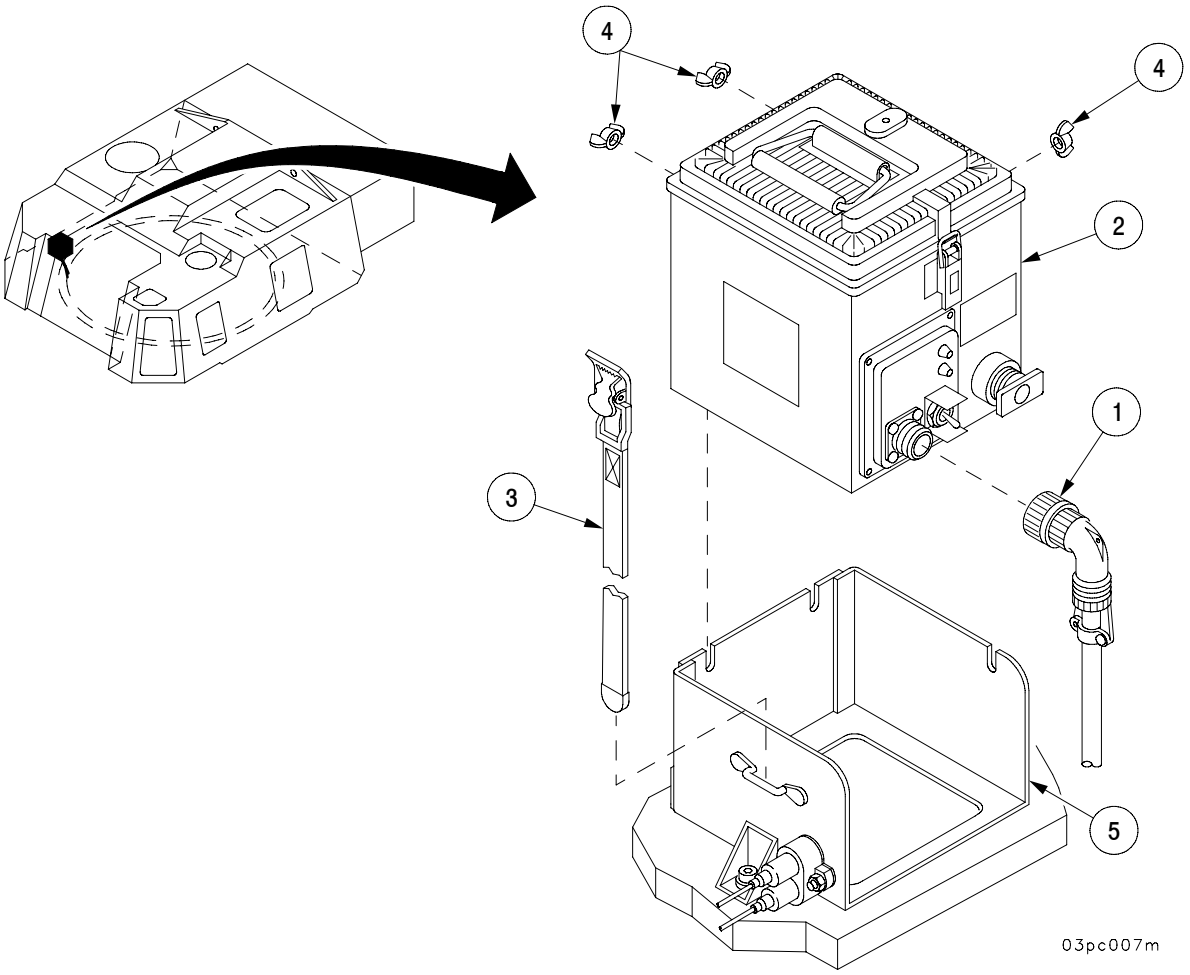

# CHAPTER 5
# AMMUNITION

## Section I. GENERAL

### 5-1 GENERAL.

**WARNING**

Until safety and reliability testing is completed, the use of ammo other than prescribed in this manual is prohibited.

a. Ammo for your 155MM howitzer cannon is the separate-loading type. The loading of each complete round into the howitzer cannon requires three separate operations: loading the fuzed projectile, the propelling charge, and the primer.

b. These components are shipped separately; therefore, the cannon crew must know how to store, unpack, inspect, prepare, and load each complete round every time the weapon is fired.

(1) The chief of section supervises the loading and preparation duties performed by crew.

(2) The chief of section must also see that the cannoneer and driver are cross-trained in the specific duties of the care, handling, unpacking, inspection, preparation, and loading of the ammunition components in order to sustain a 24-hour operation or to operate with a reduced crew.

c. Refer to Chapter 6 for information about NATO ammunition authorized for use on the M109A6 howitzer.

d. For maintenance of ammunition, see para 5-18.

e. Refer to para 5-19.4 for information about the Loose Projectile Restraint System (LPRS), which is a divider rack for securing loose, unfuzed projectiles for transportation in a field artillery companion vehicle.

f. Do not fire charges 1 and 2, Green Bag, M3A1. The fire control solution to fire these charges is not available in the M109A6 Howitzer.

### 5-2 IDENTIFICATION.

Important information is stenciled on each projectile. New and old projectile colorings and markings are listed in Table 5-1. Knowing the color coding and the meaning of the markings will aid in the rapid selection of the required projectile when firing. Know your ammunition!

## 5-2 IDENTIFICATION - CONTINUED

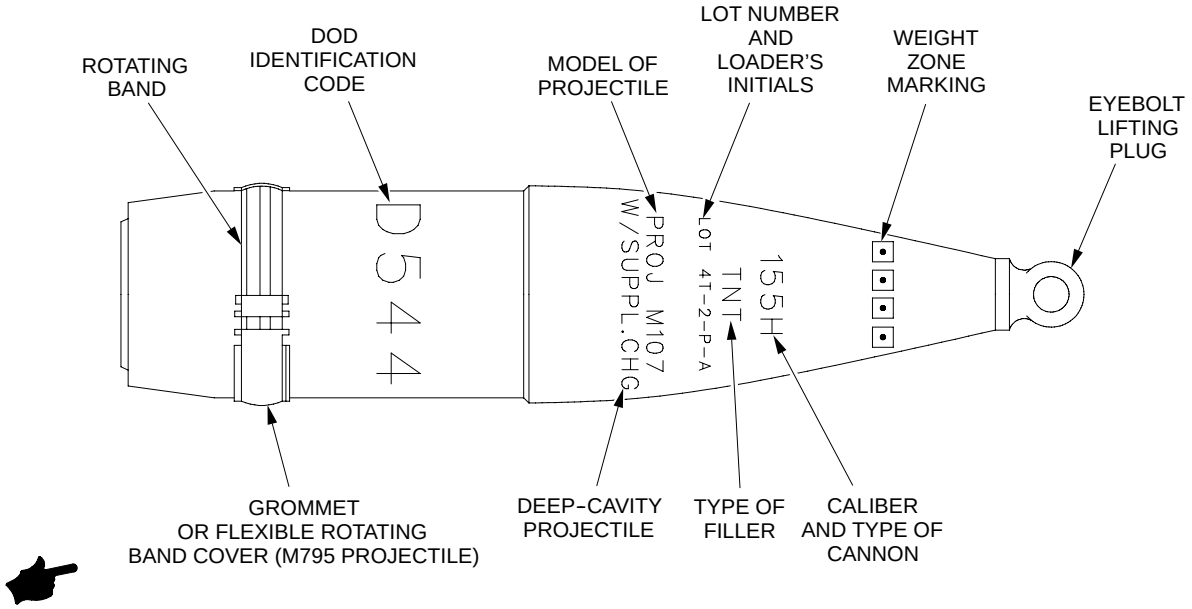


MARKING OF THE 155M, HE PROJECTILE

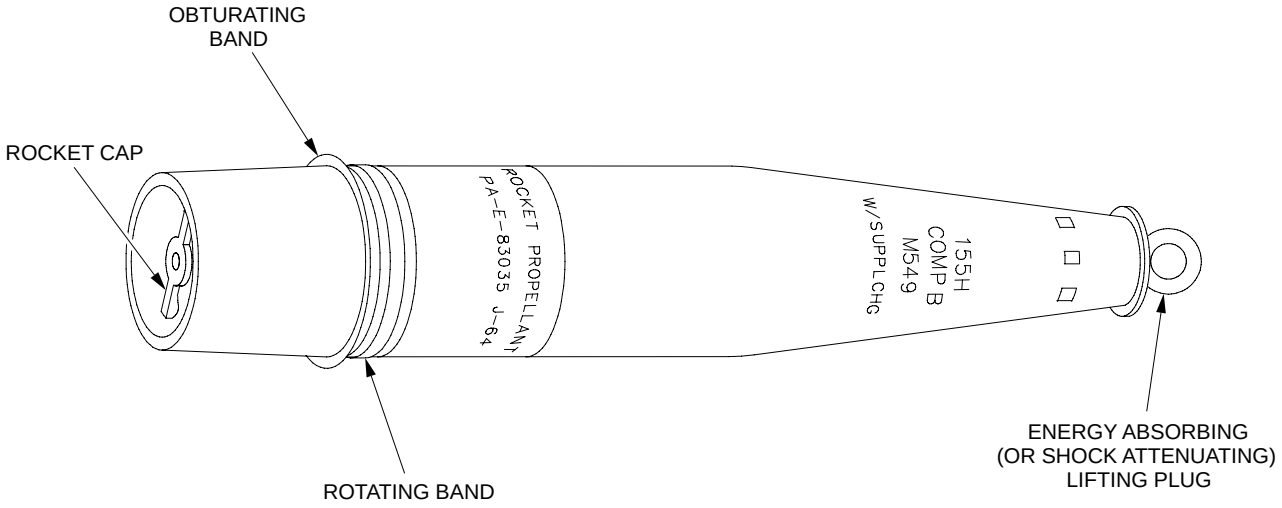


PROJECTILE, 155MM, HERA, M549

02pc059m

## 5-2 IDENTIFICATION - CONTINUED

### Table 5-1. Projectile Coding and Markings

**MODEL NUMBERS AND COLOR CODING OF PROJECTILES**

**NOTE**

* Row of yellow diamonds between nose and bourrelet of projectile.
** ADAM-area denial artillery munition.
*** Yellow triangles between the nose and bourrelet of projectile with letters S or L painted inside the triangles.
**** RAAM-remote antiarmor mine system.
***** The M825A1 looks the same as the M825 and has a red band near top of projectile.

| MODEL AND TYPE OF PROJECTILE | NEW MANUFACTURE | | | OLD MANUFACTURE | | |
|---|---|---|---|---|---|---|
| | COLOR OF PROJECTILE | NO./COLOR OF BANDS | MARKING | COLOR OF PROJECTILE | NO./COLOR OF BANDS | MARKING |
| M110, agent (H, MD), w/burster | Gray | 2/Green 1/Yellow | Green | Gray | 2/Green | Green |
| M121A1, agent (GB or VX), w/burster | Gray | 3/Green 1/Yellow | Green | Gray | GB1/Green VX2/Green | Green |
| M116, M116B1 Smoke, BE, (HC) | Light green | None | Black | Gray | 1/Yellow | 1/Yellow |
| M116A1, smoke, BE, (HC) | Light green | None | Black | Not applicable | | |
| M449 series, HE, ICM | Olive drab | Diamonds* | Yellow | Olive drab | None | Yellow |
| M483A1, HE DP, ICM | Olive drab | Diamonds* | Yellow | Not applicable | | |
| M107, HE, comp B and TNT filler w/ and w/o suppl charge | Olive drab | None | Yellow | Olive drab | None | Yellow |
| M795, HE | Olive drab | None | Yellow | Not applicable | | |
| M485A1, M485A2, illuminating | Olive drab | 1/White | White | Olive drab | None | White |
| M687, Agent GB2 w/burster | Gray | 1/Broken Green 1/Yellow | Dark Green | Not applicable | | |
| M864, HE, DP, ICM Extended Range | Olive drab | Diamonds* | Yellow | Not applicable | | |
| M110A1 (M110E2), M110A2 (M110E3), smoke, (WP) | Light green | 1/Yellow | Red | Gray | 1/Yellow | Yellow |
| M825/M825A1 Smoke (WP)***** | Light green | 1/Yellow | Red | Not applicable | | |
| M549, M549A1, HERA | Olive drab | None | Yellow | Not applicable | | |
| M692, HE (ADAM**) | Olive drab | Tri-angles*** | (L) Yellow | Not applicable | | |
| M731, HE (ADAM**) | Olive drab | Tri-angles*** | (S) Yellow | Not applicable | | |

## 5-2 IDENTIFICATION - CONTINUED

### Table 5-1. Projectile Coding and Markings - Continued

**MODEL NUMBERS AND COLOR CODING OF PROJECTILES - Continued**

**NOTE**

* Row of yellow diamonds between nose and bourrelet of projectile.
** ADAM-area denial artillery munition.
*** Yellow triangles between the nose and bourrelet of projectile with letters S or L painted inside the triangles.
**** RAAM-remote antiarmor mine system.
***** The M825A1 looks the same as the M825 and has a red band near top of projectile.

| MODEL AND TYPE OF PROJECTILE | NEW MANUFACTURE | | | OLD MANUFACTURE | | |
|---|---|---|---|---|---|---|
| | COLOR OF PROJECTILE | NO./COLOR OF BANDS | MARKING | COLOR OF PROJECTILE | NO./COLOR OF BANDS | MARKING |
| M718, AT (RAAM****)<br>M718A1, AT (RAAM****) | Olive drab | Tri-angles*** | (L) Yellow | Not applicable | | |
| M741, AT (RAAM****)<br>M741A1 AT (RAAM****) | Olive drab | Tri-angles*** | (S) Yellow | Not applicable | | |
| M712, HEAT (Copperhead) | Black | None | Yellow | Not applicable | | |
| M823, Training (Copperhead) | Bronze | None | Black | Not applicable | | |
| M804, Practice | Blue | 1/Brown | White | Not applicable | | |
| M804A1, Practice | Blue | 1/Yellow | White | Not applicable | | |
| M898 (SADARM) | Black | Diamonds* | Yellow | Not applicable | | |
| **NATO PROJECTILES:** | | | | | | |
| L15A1/A2, HE | Olive drab | None | Yellow | Not applicable | | |
| DM105, SMK, HC | Light green | None | Black | Not applicable | | |
| DM106, Illumination | Olive drab | 1/White | White | Not applicable | | |
| DM602, DM612, DM632, DM642 HE, HEAT-FRAG | Olive drab | Diamonds* | Yellow | Not applicable | | |
| DM652, HE, HEAT-FRAG (B.B) | Olive drab | Diamonds* | Yellow | Not applicable | | |
| DM21, HE | Olive drab | None | Yellow | Not applicable | | |
| M107C1, HE Comp B and TNT filler w/ and w/o suppl change | Olive drab | None | Yellow | Not applicable | | |

## 5-3 AUTHORIZED PROJECTILES.

**WARNING**

- Unauthorized assembly and use of projectiles and propelling charges are extremely dangerous. Make sure projectiles are marked 155 H (not G).
- Only those items listed are authorized. Firing of unauthorized propelling charge, projectile, or fuze combinations can result in critical malfunctions.
- Charge 1 (M3 series green bag), charge 2 (green bag) will not be fired in the M284 cannon. Charge 2 (green bag charge (GB)) may be used with any M100 series projectile, M449 series projectile, M804/M804A1 projectile, and the M485 projectile, however, stickers may occasionally occur. All other projectiles, except the M795, use minimum charge 3 (GB) or charge 3 (white bag charge (WB)) and higher. M795 uses minimum charge 3 (GB) or charge 4 (WB). Firing below these charges may result in stickers.

a. Projectiles and fuze combinations for authorized rounds are given in para 5-3.19. Authorized projectiles propelling charge combinations are given in para 5-3.19.

b. Projectiles of current manufacture, with deep fuze cavities and supplementary charges of TNT, are suitable for use with the long intrusion (M728 or M514 series) or the short intrusion (M732) proximity fuzes. The supplementary charge must be removed when the long intrusion proximity fuze is used; it must remain in place whenever any other authorized fuze is used.

c. Deep-cavity projectiles are identified by the words, W/SUPPL CHG, marked on the projectile. Weight zones are indicated on projectiles by one or more squares of the same color as the markings. Four squares indicate standard or normal weight for which no weight corrections are necessary when computing firing data. There may also be punch marks in center of squares for night identification of weight zones by touch.

d. The authorized projectiles and their characteristics are as follows:

## 5-3 AUTHORIZED PROJECTILES - CONTINUED

### 5-3.1 Projectile, 155MM, HE, M107.

This high-explosive (HE) projectile is used primarily for blast, fragmentation, and mining. The deep- or shallow-cavity projectile consists of a steel case loaded with either TNT or composition B. A point-detonating, time, or proximity fuze may be used. The M107 projectile weighs approximately 95 lb (43.13 kg).

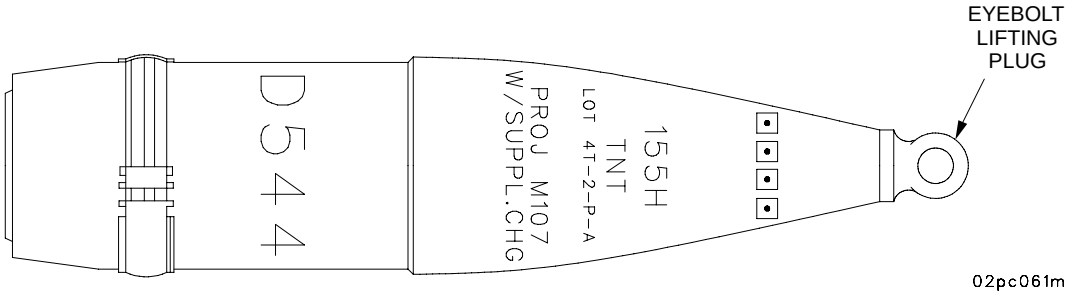


### 5-3.1.1 Projectile, 155MM, HE, M795.

**WARNING**

- The M795 projectile will not be fired at charge 3 (white bag (WB)). Firing at charge 3 WB may result in stickers.
- The M795 is not to be fired if the obturator is missing or broken as rotating band failure and short round may result. If the band is displaced and can be repositioned and remain in the groove, the projectile can be fired.

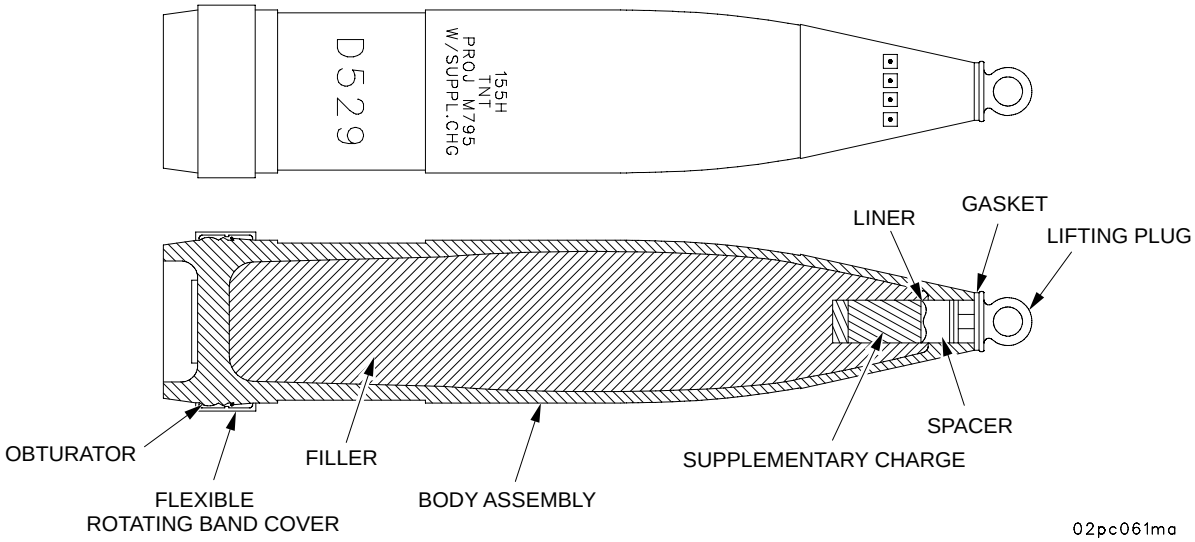


This high-explosive, shallow cavity projectile is used as a registration round for the M483A1 family of cargo munitions. It is also used for Harassment and Interdiction (H&I), fragmentation, mining, and blast effect. The M795 projectile consists of 23.8 pounds of TNT explosive loaded into a 78.1 lb (35.46 kg) body assembly. A welded rotating band encircles the high fragmentation steel HF-1 body near its base.

## 5-3 AUTHORIZED PROJECTILES - CONTINUED

### 5-3.2 Projectile, 155MM, Agent, H or HD, M110.

**WARNING**

Since the burster in H or HD ammunition is loaded with tetrytol, do not store or fire at temperatures exceeding +125°F (+52°C). Temperatures above +125°F (+52°C) will cause the tetrytol to melt and/or seep, causing premature functioning.

This projectile produces a toxic effect on personnel and is also used to contaminate habitable areas. This 93 lb (42.22 kg) projectile is filled with mustard gas (H) or distilled mustard gas (HD) and has a burster charge.

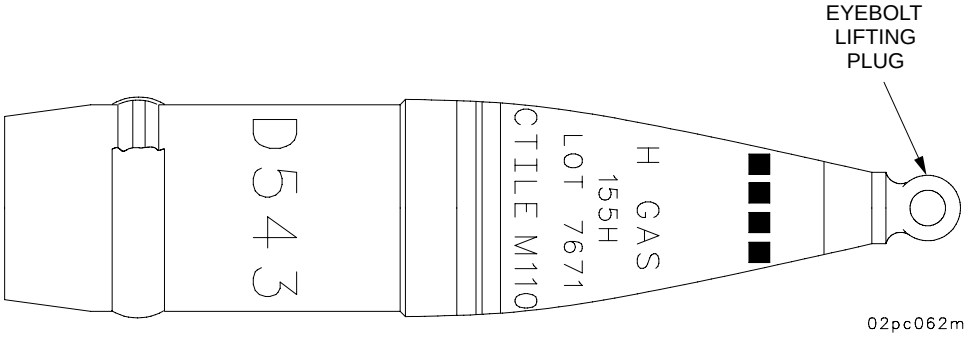


5-3.2.1 Projectile, 155MM, GB2, M687. These projectiles are used to produce a toxic effect on personnel. The M687 is a binary projectile which requires assembly of the M20 canister prior to firing. The M20 canister is a separate issue item (NSN 1320-00-407-8301 (D001)).

The M687 is assembled at the chemical ammunition supply point (CASP) per TM 3-1320-242-10 and will have a broken green band visible. If a rubber sleeve covers the broken green band, assembly of the M20 canister has not been accomplished and the projectile should not be fired. The projectile has a weight of 4 squares.

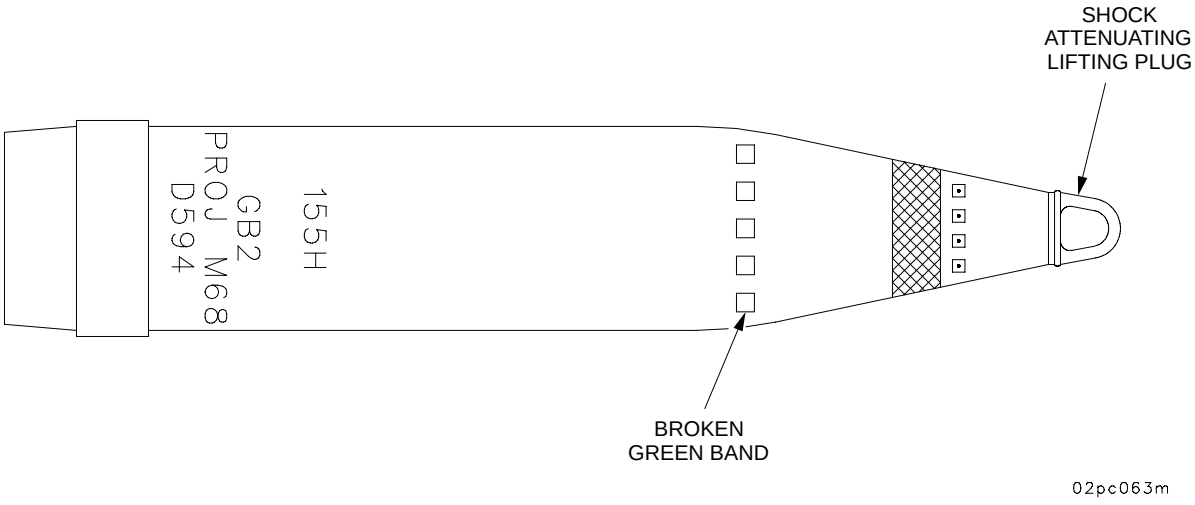

## 5-3 AUTHORIZED PROJECTILES - CONTINUED

### 5-3.3 Projectiles, 155MM, Smoke, WP, M110A1 (M110E2), and M110A2 (M110E3).

These white phosphorous (WP) projectiles have a slight burning effect, but are used primarily to produce screening smoke. The burster is loaded with composition B5. These projectiles are simliar to the M110 gas projectile and have the same ballistic characteristics as the M107 HE projectile. Each projectile weighs approximately 98 lbs (44.49 kg). These projectiles may be stored and transported at temperatures up to +145° F (+63° C). Inspection of the fuze well cup is required before firing.

**WARNING**

The filter in white phosphorous (WP smoke projectiles melts at +111.4° F (+44.1° C) and creates voids inside the projectile. The WP projectiles must be stored base down so that any voids are in the nose of the projectile. Do not fire WP projectiles which are known to have been stored in other than base down position. Firing of such projectiles could contribute to inbore explosions or close-in premature malfunctions.

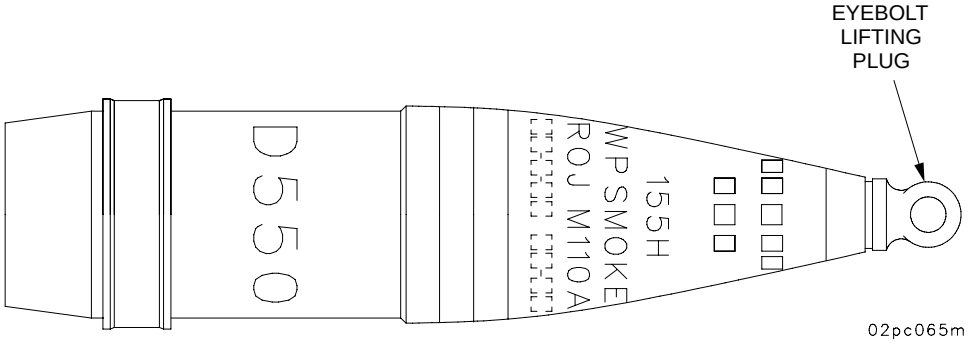

## 5-3 AUTHORIZED PROJECTILES - CONTINUED

### 5-3.4 Projectile, 155MM, Gas, VX (Persistent) or GB (Non-Persistent) M121A1.

**WARNING**

The M121 projectile is no longer authorized. A few M121 (basic model) projectiles with tetrytol bursters may remain in some stockpiles and should not be used, as inbore explosions may result.

These gas projectiles produce a toxic effect on personnel. A burster charge breaks the projectile apart. These projectiles weigh approximately 100 lbs (45.4 kg).

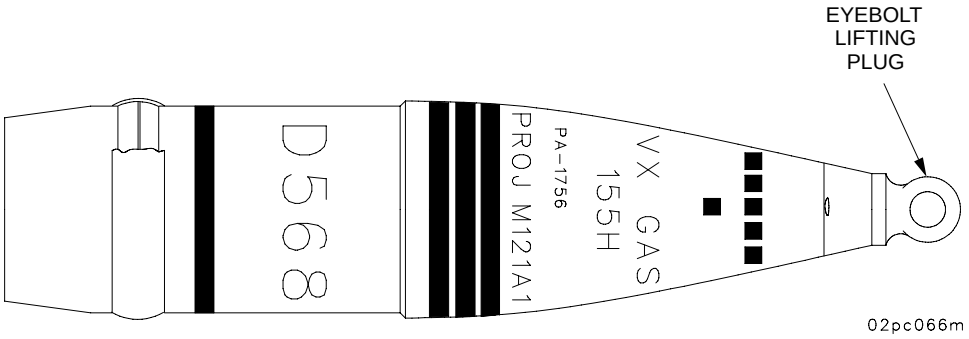


### 5-3.4.1 Projectile, 155MM, SADARM Basic, M898

This projectile is a 155MM fire-and-forget, top-attack, counterfire munition. Millimeter-wave radar and infrared sensors locate targets and provide countermeasure resistance. The warhead is an explosively formed penetrator designed for top-attack of self-propelled howitzers and armored combat vehicles. SADARM will defeat all known armor with the same anti-armor effectivemess as the M483A1 DPICM with 80 percent fewer projectiles. SADARM product improvement (PI) will have improved sensors, a larger footprint, cost less and almost double SADARM Basic's antiarmor effectiveness.

Characteristics

- Number of Submunitions: 2
- Submunition Footprint radius: Basic: 75m, PI: 150m
- Range: M109A5/A6/M198 w/M898 SADARM 22.5 km
  Crusader w/XM982 SADARM 50.0 km

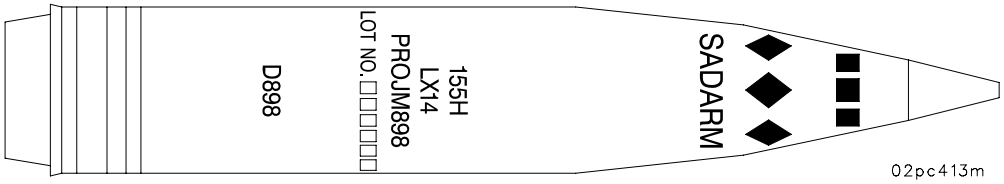

## 5-3 AUTHORIZED PROJECTILES - CONTINUED

### 5-3.5 Projectile, 155MM, Smoke, WP, M825/M825A1.

**WARNING**

- White phosphorus (WP) impregnated felt wedges from the M825/M825A1 are not totally consumed when the WP burns. When the unburned felt wedges are crushed or moved, residual WP will reignite, posing a burn hazard. Personnel should not contact or move the unburned felt wedges, to prevent serious personal injury.
- The M825/M825A1 is not to be fired if the obturator is missing or broken as rotating band failure and short round may result. If the band is displaced and can be repositioned and remain in the groove, the projectile can be fired.

The M825/M825A1 projectile consists of a modified M483A1 projectile carrier with a payload of white phosphorus impregnated felt wedges. In-flight fuze functioning ejects a canister. A burster inside the canister scatters burning wedges over the target area, producing obscuring smoke. This projectile uses the MTSQ M577 or the M762 ET series fuze. The M825A1 contains an improved payload and a new base which have corrected the M825 flight instability. The restrictions imposed on the M825 do not apply to the M825A1. The M825A1 has a weight of 102 lbs (46.3 kg) or 2-6 square.

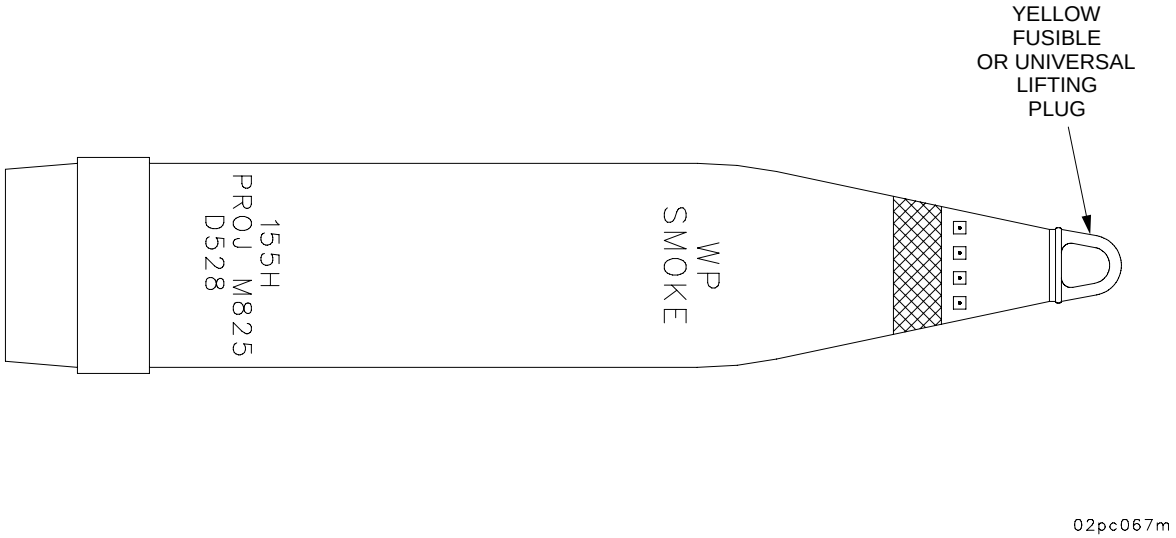

## 5-3 AUTHORIZED PROJECTILES - CONTINUED

### 5-3.6 Projectile, 155MM, Smoke, HC, M116A1.

The M116A1 projectile is a base-ejection type. The M116A1 projectile is similar to the M116 and M116B1 with the exception that it uses the M565 MT and M577 series MTSQ and M762 ET fuzes. It has improved M1 and M2 HC (white) smoke canisters.

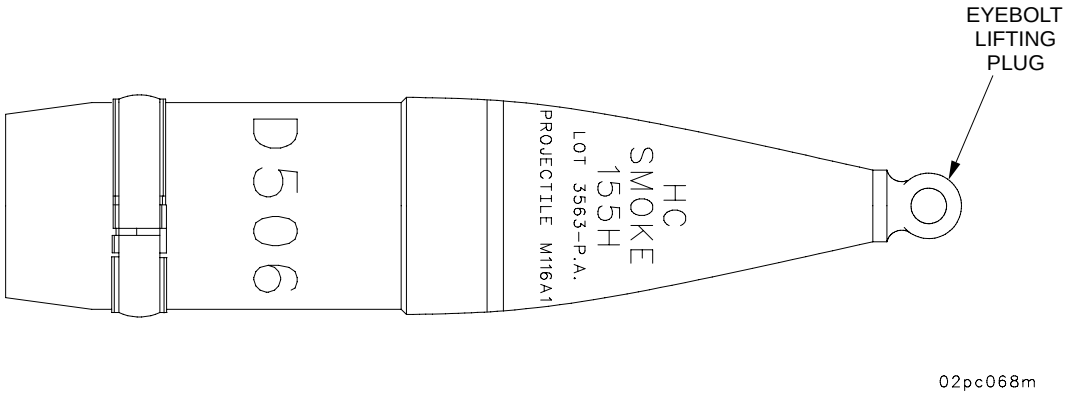


### 5-3.7 Projectile, 155MM, Illuminating, M485A1 and M485A2.

**WARNING**

The M485A1 and M485A2 projectiles can be fired with charge 3 (M3A1 green bag) thru 8 (M119 series charges) inclusive. These projectiles are not reliable when fired at charges 6, 7, and 8 with fuze settings of 10 seconds or less.

These projectiles are used for battlefield illumination. The projectile has a hollow steel body containing a primary expelling charge, a canister assembly, and a drogue parachute. The canister assembly contains a secondary expelling charge, a delay holder, a light producing chemical, and the main parachute.

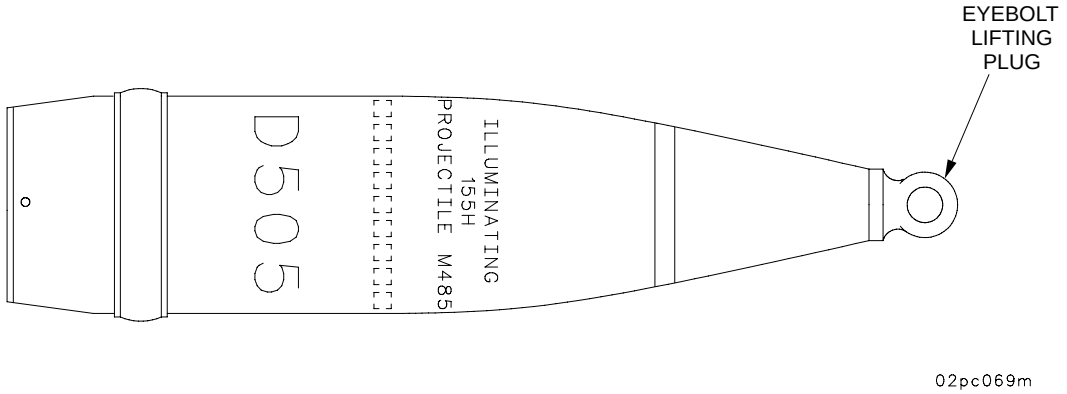

## 5-3 AUTHORIZED PROJECTILES - CONTINUED

### 5-3.8 Projectiles, 155MM HE, Rocket Assist M549/M549A1.

**WARNING**

- Standard procedures prohibit firing the M549/M549A1 in the rocket off mode, except in combat emergencies.
- The M549/M549A1 is not to be fired if the obturator is missing or broken as rotating band failure and short round may result. If the band is displaced and can be repositioned and remain in the groove, the projectile can be fired.
- If the M549/M549A1 is fired in the rocket off mode due to a combat emergency situation, a 7000-meter safety zone is required beyond the target because of the possibility of rocket motor ignition.
- The M549 may not be fired with the M203 propelling charge. The M549A1 may be fired with the M203 propelling charge.
- Rocket cap must be removed prior to firing M549/M549A1 in the rocket on mode.
- When the M549/M549A1 is fired in the rocket on mode, a 7000-meter safety zone is required short of the target because of the possibility of rocket motor non-ignition.

a. This is a high fragmentation projectile containing a rocket motor. The protective rocket motor cap must be removed from the projectile before firing to increase the range over that attainable ballistically. The M549 differs from the M549A1 only in the type of explosive filler. The M549 is loaded with composition B and M549A1 is loaded with TNT.

b. The M549/M549A1 projectiles have the energy-absorbing or shock attenuating lifting plug designed to protect the projectile fuze area against accidental damage. The new plug has an oversized 3-3/4-in. (9.53-cm) flange. If this lifting plug is broken at the neck area, the threaded portion of the plug will remain in the projectile and the projectile cannot be fuzed. No attempt should be made to extract any portion of a broken plug from a projectile; the projectile is not to be used and should be returned to Ammunition Supply Point (ASP).

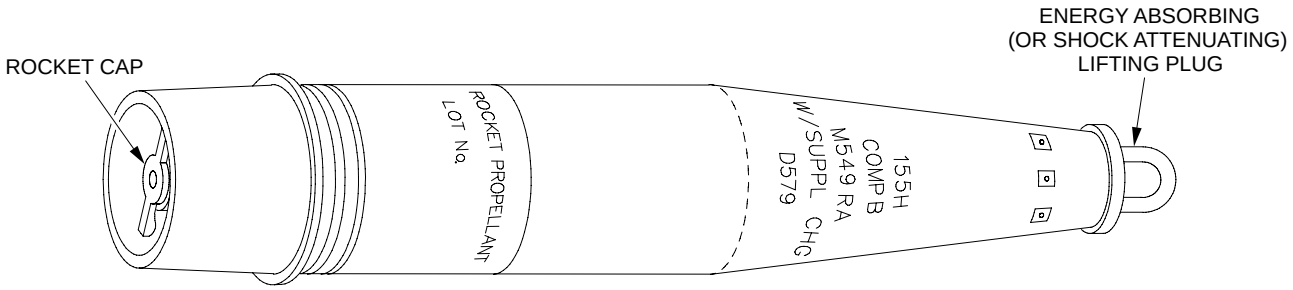


PROJECTILE, M549, OR M549A1

02pc070m

## 5-3 AUTHORIZED PROJECTILES - CONTINUED

### 5-3.9 Projectile, 155MM, ICM, M449 Series.

These projectiles are improved conventional munitions (ICM) used primarily against personnel. The cargo consists of 60 M43 grenades which are ejected in flight. The fuze, having been set to function at a predetermined time, initiates the expulsion charge ejecting the entire cargo from the rear of the projectile. The projectile spins centrifugally and disperses the grenades from the projectile line-of-flight. Upon impact with the target area, an expulsion charge is initiated which propels a high explosive filled sphere upward 4 to 6 feet (1.22 to 1.83 m) above the impact area. The elevated sphere is detonated sending high-velocity fragments in a spherical pattern. Each projectile weighs approximately 95 lb (43.13 kg).

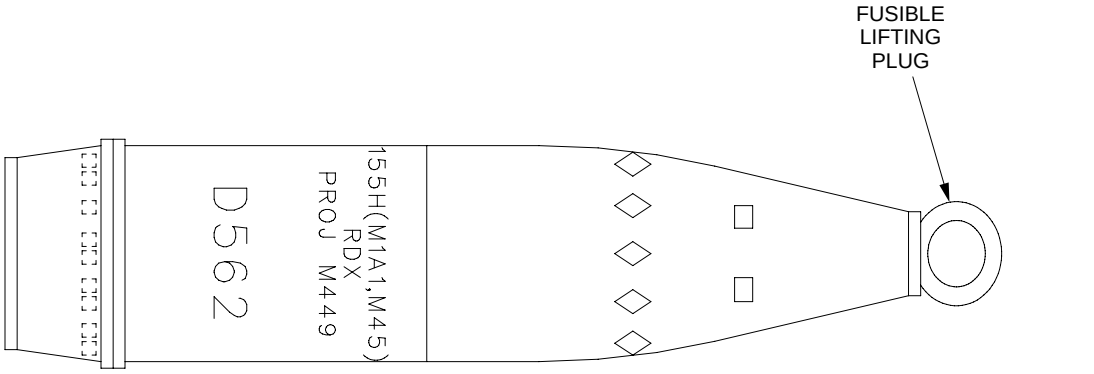


M449 SERIES PROJECTILE

02pc071m

## 5-3 AUTHORIZED PROJECTILES - CONTINUED

### 5-3.10 Projectile, 155MM, ICM, M483A1.

**WARNING**

The M483A1 projectile will not be fired below charge 3 in the M284 cannon. Firing below charge 3 may result in stickers.

**NOTE**

The M483A1 projectile or other projectiles using the M483A1 carrier may be fired with or without an obturating band. If the obturating band is broken, remove and discard it. If it is dislodged, remove or reposition it.

This is a dual-purpose ICM projectile. It is effective against personnel and light material targets. These base-ejection type projectiles consist of a steel body with aluminum base and ogive containing an expelling charge and 88 shaped-charge grenades. This projectile weighs approximately 103 lb (46.76 kg) and is fitted with a yellow, fusible lifting plug. This projectile uses the M577 series MTSQ or the M726 ET fuze. It can be used in the fire-for-effect or self-registration modes.

a. In the fire-for-effect mode, the expelling charge ejects the 88 grenades from the projectile during flight and they actuate on ground or target impact. A shaped charged jet is expelled downward while the body bursts into a large number of high velocity fragments. The jet is capable of penetrating approximately 2.75 inches (6.99 cm) of homogenous armor plate. Antipersonnel effects are obtained by fragmentation of the body.

b. In the self-registration mode, the expelling charge is removed, a projectile spotting charge is attached to the time fuse and installed into the projectile. Functioning of the fuse detonates the entire projectile over the target, permitting observation of the projectile as it functions in relation to the target.

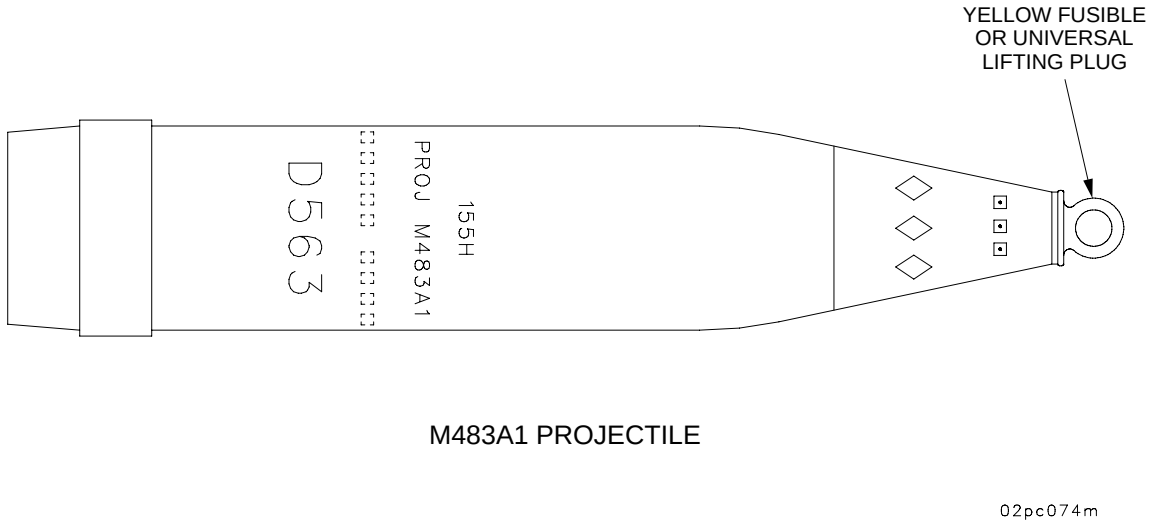


M483A1 PROJECTILE

The spotting charge will cause the projectile to detonate all 88 grenades inside the projectile, causing high fragmentation in the same manner as a standard high-explosive projectile. See para 5-9.4 for additional information on special preparation of the M483A1 projectile for use in the self-registration mode.

## 5-3 AUTHORIZED PROJECTILES - CONTINUED

### 5-3.11 Projectile, 155MM, DPICM, M864.

**WARNING**

- A 5000-meter safety zone is required short of the target because of the possibility of the base burner assembly non-ignition.
- The M864 is not to be fired if the obturator is missing or broken because it may result in a short round. If the band is displaced and can be repositioned and remain in the groove, the projectile can be fired.
- For M864 projectiles marked with three solid white circles 120 degrees apart on the ogive (above the weight zone markings), avoid hazards resulting from gaps at the base to body joint and from separation of the base from the body in the M864, follow these safety procedures:

  Projectiles are to remain palletized as long as possible prior to use.

  Do not transport projectiles as loose cargo.

  Do not fire projectiles received without grommets or with evidence of dents, flattenings, or gouges to the lifting plug, grommet, rotating band, and boatail area.

  Do not fire projectiles which have been dropped loose from supply vehicles or SP howitzers.

  Any base separations should be handled by EOD personnel.
- A gap at the base to body joint of the projectile may lead to hot propellant gases entering the round during firing and causing an inbore premature. Gaps are not detectable with a visual examination due to the presence of the obturator over the base to body joint. In addition, a separation of the base from the body of the projectile will expose M42 and M46 grenades. Arming could occur and result in injury and/or death.

## 5-3 AUTHORIZED PROJECTILES - CONTINUED

### 5-3.11 Projectile, 155MM, DPICM, M864 - Continued

**NOTE**

- The M864 is for extended range only. Use the M483A1 projectile where applicable. The M864 shall be fired to achieve ranges beyond the capabilities of the M483A1 projectile or when the M483A1 is not available.
- For stowage of M864 projectiles see Appendix E.

This is an extended range dual purpose, ICM projectile used in the M284 or M185 cannon. The M864 is modeled after the M483A1 projectile with the addition of a base burner unit at the projectile's base. The propellant in the base burner ignites upon firing of the projectile, producing gases, which reduces the drag on the projectile and extends its range. This is a base ejection type projectile with a steel body. The expulsion charge contains 105 grams of M10 propellant. There are 72 shaped charge grenades, 48 are M42 grenades and 24 are M46 grenades. They are effective against personnel and light materiel targets. The projectile weighs approximately 102 lb (46.3 kg) or 2-6 square and uses the M577 series MTSQ fuze or the M762 ET fuze. It can be used in the fire-for-effect mode or the registration mode.

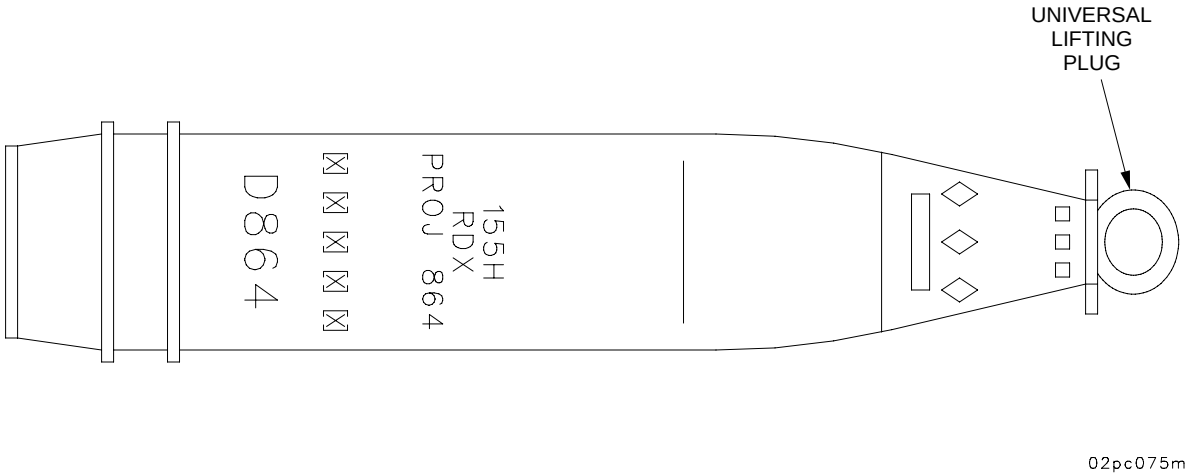

## 5-3 AUTHORIZED PROJECTILES - CONTINUED

### 5-3.12 Projectile, 155MM, HE, M692.

This high-explosive (HE) projectile is known as the area denial artillery munition (ADAM). It is painted olive drab with yellow markings. The most significant marking on the ogive is the letter “L” appearing in the triangles and on later production, “ADAM-L” on the ogive that indicates a long self-destruct time for the antipersonnel mine submunitions. The M577 series MTSQ or the M762 ET fuze, having been set to function at a predetermined time in flight, initiates the expulsion charge which ejects the 36 mines from the rear of the projectile line of flight. The mines are completely armed a short time after ground impact. A self-destruct mechanism is activated which initiates the mine after a predetermined time if the munition is not functioned by trip wire or disturbance.

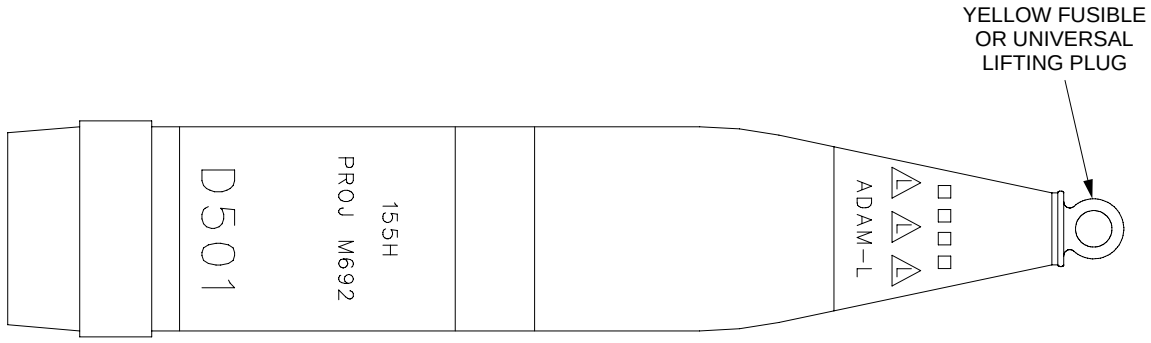


M692 PROJECTILE

02pc077m

### 5-3.13 Projectile, 155MM, HE, M731.

This projectile is the same as the M692 projectile in appearance and functioning except for the letter “S” within the yellow triangles and “ADAM-S” on the ogive of later production to indicate a shorter self-destruct time for the antipersonnel mine submunitions. The base-ejection type projectile uses the M577 series MTSQ or the M762 ET fuze.

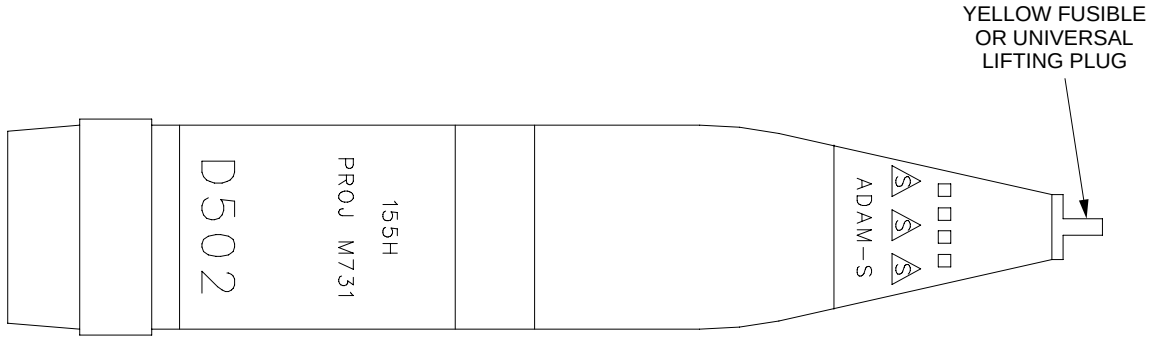


M731 PROJECTILE

02pc078m

## 5-3 AUTHORIZED PROJECTILES - CONTINUED

### 5-3.14 Projectile, 155MM, AT, Remote Anti-Armor Mine System, M718/M718A1.

This projectile is used to deliver high-explosive antitank mines in front of enemy armored forces to deny/delay access to a particular area for a specific time period. This projectile is from the family of scatterable mines and is known as the remote anti-armor mine system (RAAMS). It is painted olive drab with yellow markings. The most significant markings are the row of yellow triangles between the nose and the bourrelet which contain the letter "L" and "RAAM-L" on the ogive that indicate the long self-destruct time for the submunition. This is a base-ejection type projectile and uses the M577 series MTSQ or the M762E fuze. The M718A1 projectile contains internal changes to the submunition and has a new DODIC (D515); however, the projectile is handled and fired the same as the basic model.

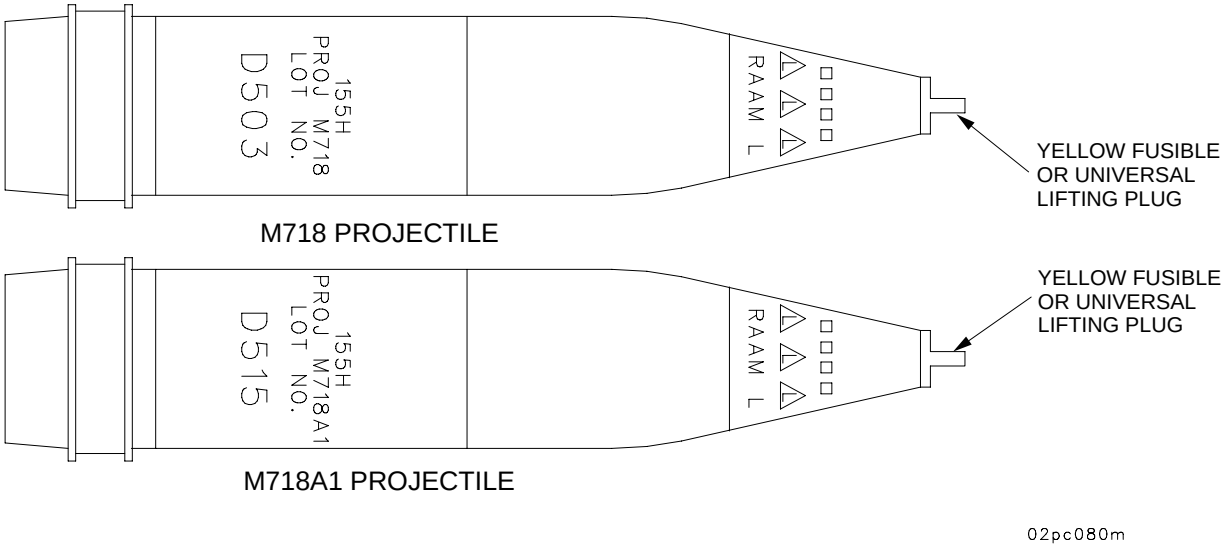


### 5-3.15 Projectile, 155MM, AT, Remote Anti-Armor Mine System, M741.

This projectile, also known as the RAAMS round, is exactly like the M718 above except the letter "S" painted in the yellow triangles and "RAAM-S" on the ogive are different to indicate a short self-destruct time. This is a base-ejection type projectile and uses the M577 series MTSQ or the M762 ET fuze. The M741A1 projectile contains internal changes to the submunition and has a new DODIC (D514); however, the projectile is handled and fired the same as the basic model.

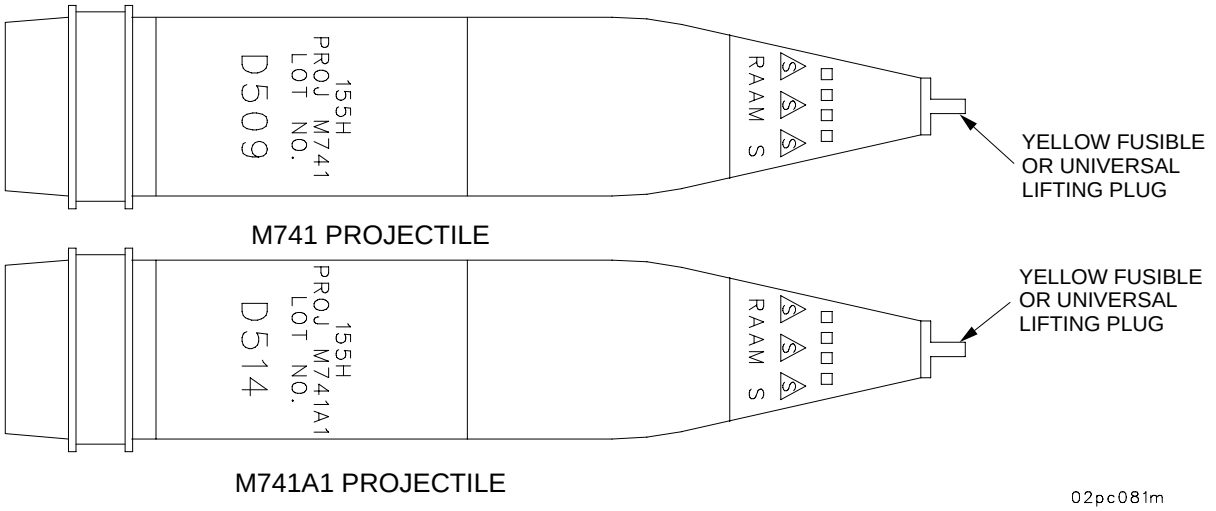

## 5-3 AUTHORIZED PROJECTILE - CONTINUED

### 5-3.16 Projectile, 155MM, HEAT, M712.

This projectile is a cannon-launched guided projectile (CLGP). It is a high-explosive, antitank (HEAT) projectile loaded with 14.75 lb (6.69 kg) of composition B. It is guided to its target by a laser beam directed on the target from a laser designator. The projectile has five time and code switches set by the crew prior to firing. The warhead section of the projectile contains its own base-detonating fuze (M740). The projectile is 54 in. (137.16 cm) long and weighs 138 lb (62.65 kg). Details on use of the M712 projectile are covered in section IV of this chapter.

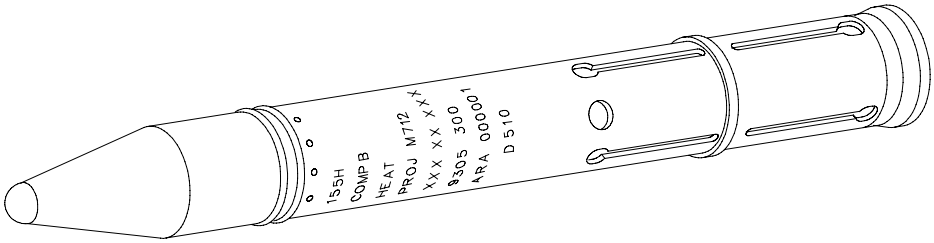


M712 PROJECTILE

02pc082m

### 5-3.17 Projectile, 155MM, Training, M823.

**WARNING**

The M823 projectile must not be fired. Such firing can be a hazard to personnel forward of the weapon.

This projectile is designed to train 155MM howitzer weapon crews to handle and set the M712 projectile. It simulates the M712 in weight, center of gravity, and external appearance. It contains code and time switches which are set to simulate prefiring activity by the crew. It is shipped and stored in the same type container as the M712 and is color coded bronze for easy identification. Details on use of the M823 projectile are covered in section IV of this chapter.

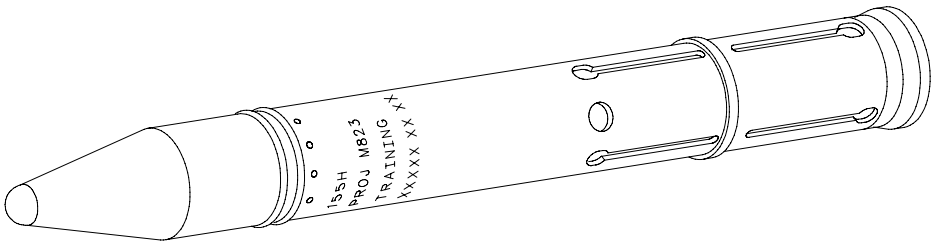


M823 PROJECTILE

02pc083m

## 5-3 AUTHORIZED PROJECTILES - CONTINUED

### 5-3.18 Projectile, 155MM, Practice M804/M804A1.

The M804/M804A1 projectile is used in place of the M107 HE projectile in training exercises. The M804 contains a small smoke canister in the fuze well which provides flash and smoke for visual determination of functioning. The M804 is similar in weight and external configuration to the M107 HE projectile, and can be used in training without the blast and fragmentation which accompany functioning of an M107 HE projectile. The body of the M804 contains four holes, 90 degrees apart, which serve to disperse smoke on functioning. The M804A1 does not contain any holes and has a large smoke canister. Both projectile models, M804 and M804A1, are handled and fired the same way.

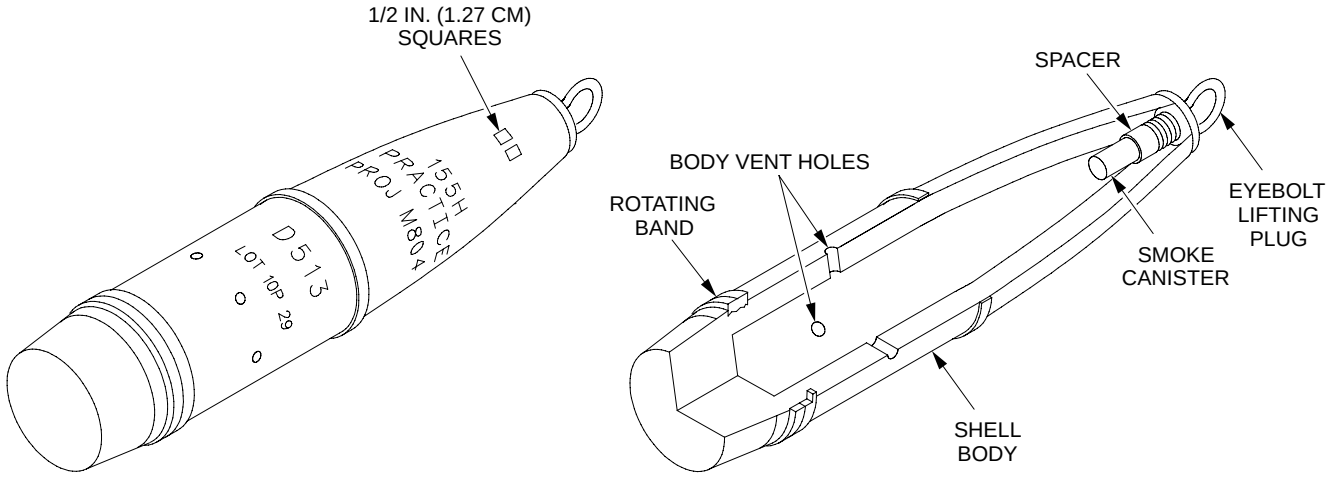


M804 PROJECTILE

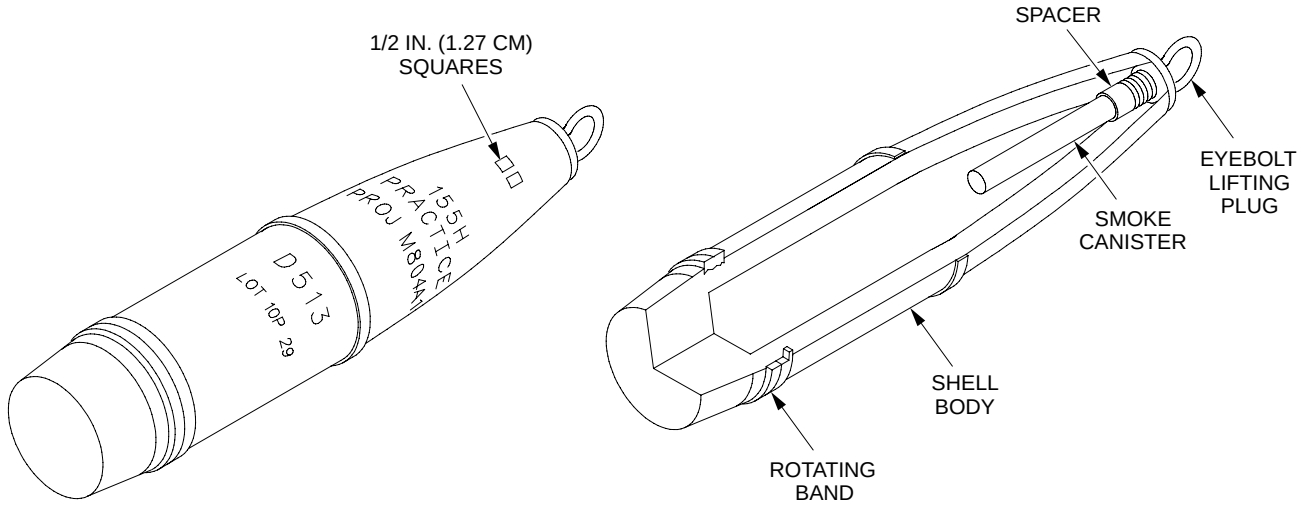


M804A1 PROJECTILE

02pc091m

## 5-3 AUTHORIZED PROJECTILES - CONTINUED

### 5-3.19 Projectile/Fuze Combinations for Howitzer M109A6 with M284 Cannon.

**WARNING**

- The firing of High Explosive Projectiles could be hazardous. A detonation of the projectile in the safe separation distance is improbable, but possible. To reduce the effects of this hazard, all personnel outside the howitzer should wear ballistic body armour during fire missions. This warning applies to both direct and indirect fire modes for all fragmentation high explosive type projectiles fired with the fuzes stated below.
- Fuze, Point detonating, M739 series (N340)
- Fuze, Point detonating, MK399 MOD1 (N659)
- Fuze, Mechanical Time and Superquick, M582 series (N286)
- Fuze, Proximity, M732 (N464)
- Fuze, Proximity, M732A2 (N291)
- Fuze, Electronic Time and Superquick, M767 series (N290)
- Fuze, Multi Option Fuze Artillery, M782 (NA09)

**NOTE**

(1) M728 and M732 fired with “VX” projectile in combat emergency only.

(2) The letter P shows compatibility for proximity fuzes that require removal of the supplementary charge to make room for the long intrusion fuze.

(3) The M483A1/M864 projectile may be used for self-registration (as a spotting round) by replacing the expulsion charge assembly with a projectile spotting charge added to the M577 series or M762 series fuze.

(4) The M864 is for extended range only. The M864 will be fired to achieve ranges beyond the capabilities of the M483A1 projectile or when the M483A1 is not available.

(5) The M549/M549A1 projectile may break up upon impact with urban structures and bunkers rendering it an ineffective penetrator of these targets.

(6) Refer to description of MK399 MOD 1 fuze in paragraph 5-4.1.3 for performance against MOUT targets.

## 5-3 AUTHORIZED PROJECTILES - CONTINUED

### 5-3.19 Projectile/Fuze Combinations for Howitzer M109A6 with M284 Cannon - Continued

**Table 5-2. Projectile/Fuze Combinations**

| PROJECTILES | FUZE | | | | | | | | | | | | |
|---|---|---|---|---|---|---|---|---|---|---|---|---|---|
| | | PD | | MT | MTSQ | | | PROX | | | ET | | MOFA |
| | Mk399MOD1 (6) | M557/M572 | M739 Series | M565 | M564 | M577 Series | M582 Series | M728 (2) | M732 Series | M514 series (2) | M762 Series | M767 Series | M782 |
| Agent, H, HD, M110 | | X | X | | X | | X | | | | | X | X |
| Agent, GB, VX, M121A1 (1) | | X | X | | | | | P(1) | X(1) | | | | X |
| HE, RA, M549/M549A1 (5) | X | X | X | | | | X | | X(5) | | | X | X |
| ME, M107 (Normal Cavity) | X | X | X | | X | | X | | X | | | X | X |
| HE, M107 (Deep Cavity) | X | X | X | | X | | X | P | X | P | | X | X |
| HE, M795 | | X | X | | | | X | | X | | | X | X |
| HE, M449 Series | | | | X | | X | | | | | X | | |
| HE, M483A1 | | | | | | X(3) | | | | | X(3) | | |
| Illuminating, M485 Series | | | | X | | X | | | | | X | | |
| SMOKE, HC, BE, M116A1 | | | | X | | X | | | | | X | | |
| SMOKE, WP, M110 Series | | X | X | | X | | X | | | | | X | X |
| SMOKE, WP, M825/M825A1 | | | | | | X | | | | | X | | |
| HE, M692/M731 (ADAM) | | | | | | X | | | | | X | | |
| AT, M718/M718A1 and M741/M741A1 (RAAM) | | | | | | X | | | | | X | | |
| PRACTICE, M804 | | X | X | | X | | X | | X | | | X | X |
| PRACTICE, M804A1 | | X | X | | X | | X | | | | | X | X |
| PROJECTILE, M898 (SADARM) | | | | | | X | | | | | | | |
| HE, DP, ICM, Extended Range M864 (4) | | | | | | X(3) | | | | | X(3) | | |
| Agent, GB2, w/burster M687 | X | X | X | | | | | | | | | | X |

## 5-3 AUTHORIZED PROJECTILES - CONTINUED

### 5-3.20 Projectile/Propelling Charge Combinations for Howitzer M109A6 with M284 Cannon

**NOTE**

*Primer M82 is the only authorized primer to be used in the M284 cannon.

***The M119A2 charge 7 (Red Bag) is equivalent to the M119A1 charge 8. Refer to firing tables for small differences in velocity which affect range.

****Do not fire the M549/M549A1/M825/M825A1/M864/M795 projectiles if the obturating band is missing or broken. If the band is displaced and can be repositioned and remain in the groove, the projectile can be fired. The M549A1 projectile may be fired with the M203 charge and M232/M232A1 charge 5, but the M549 must never be fired with the M203 charge or M232/M232A1 charge 5.

*****M825 projectiles (manufactured Jan 85 - May 86) fired at temperatures above 110°F (43°C) (WP liquified) have resulted in flight instability and short rounds. This instability does not occur below 110°F (43°C) (WP solid). This restriction does not apply to M825A1 projectile.

*******M203 charge 8 is not equivalent to M119A1 charge 8.

M232/M232A1 charge 5 is equivalent to M203 series charge 8.

(1) M825 projectiles are restricted to firing below 950 mils elevation with the M203 series charge. Firing of this combination at elevations exceeding 950 mils may result in short rounds. This restriction does not apply to M825A1 projectile.

(2) M203 series charge is not equivalent to M119A1 charge 8.

(3) Do not fire charges 1 and 2, green bag, M3A1. The fire control solution to fire these charges is not available in the M109A6 howitzer.

(4) Do not load or fire M231 charges with the M232/M232A1 charges. Critical malfunction could result. M232/M232A1 charge 5 is equivalent to M203 charge 8.

## Table 5-3. Projectile/Propelling Charge Combinations

| AUTHORIZED PROJECTILE/PROPELLING CHARGE COMBINATIONS FOR *M284 CANNON | | | | | | | | | | | | | | | | | | | |
|---|---|---|---|---|---|---|---|---|---|---|---|---|---|---|---|---|---|---|---|
| PROJECTILES | PROPELLING CHARGE | | | | | | | | | | | | | | | | | | FIRING LIMITATIONS |
| | (GREEN BAG) M3A1 CHARGES (3) | | | | | (WHITE BAG) M4A2 CHARGES | | | | | M119A1 CHG 8 (2) | M119A2 (RED BAG) CHG 7 *** | M203 CHG8 ******* and M203A1 (2) | M231 CHG (4) | | M232/M232A1 CHARGES (4) | | | |
| | 1 | 2 | 3 | 4 | 5 | 3 | 4 | 5 | 6 | 7 | | | | 1 | 2 | 3 | 4 | 5 | |
| HE, M107 | NO | NO | X | X | X | X | X | X | X | X | X | X | NO | X | X | X | X | NO | |
| HE, M795 | X | X | X | X | X | NO | X | X | X | X | X | X | X | X | X | X | X | X | |
| HE, M449, M449A1, ICM | NO | NO | X | X | X | X | X | X | X | X | X | X | NO | X | X | X | X | NO | |
| HE, M483A1, ICM | NO | NO | X | X | X | X | X | X | X | X | X | X | NO | X | X | X | X | NO | |
| HE, M692, M731 | NO | NO | X | X | X | X | X | X | X | X | X | X | NO | X | X | X | X | NO | |
| AT, M718, M718A1 AT, M741, M741A1 | NO | NO | X | X | X | X | X | X | X | X | X | X | NO | X | X | X | X | NO | |
| ILLUMINATING, M485A1, M485A2 | NO | NO | X | X | X | X | X | X | X | X | X | X | NO | X | X | X | X | NO | M485A1/A2 projectiles are not reliable when fired at charges 6, 7 and 8 with fuze settings of 10 seconds or less. |
| AGENT H, HD, M110 | NO | NO | X | X | X | X | X | X | X | X | X | X | NO | X | X | X | X | NO | M110 agent burster loaded with tetrytol cannot be stored or fired at temperatures exceeding +125°F (+52°C). |
| SMOKE, WP, M110 SERIES | NO | NO | X | X | X | X | X | X | X | X | X | X | NO | X | X | X | X | NO | |
| HE, DP, ICM EXTENDED RANGE M864 | NO | NO | NO | NO | NO | NO | NO | NO | NO | X | X | X | X | NO | NO | X | X | X | |
| AGENT, GB2, W/BURSTER, M687 | NO | NO | X | X | X | X | X | X | X | X | X | X | X | NO | NO | X | X | X | |
| SMOKE, BE HC, M116A1 | NO | NO | X | X | X | X | X | X | X | X | X | X | NO | X | X | X | X | NO | |
| AGENT, (GB OR VX) M121A1 | NO | NO | X | X | X | X | X | X | X | X | X | X | NO | X | X | X | X | NO | |
| SMOKE, WP, M825 ***** | NO | NO | X | X | X | X | X | X | X | X | X | X | NO | X | X | X | X | X | (1) |
| SMOKE, WP, M825A1 ***** | NO | NO | X | X | X | X | X | X | X | X | X | X | YES | X | X | X | X | X | |
| HERA, M549, M549A1 **** | NO | NO | NO | NO | NO | NO | NO | NO | NO | X | X | X | X | NO | NO | X | X | X | Rocket off mode only during combat emergencies. |
| HEAT, M712 (Copperhead) | NO | NO | NO | X | X | NO | X | X | X | X | X | X | NO | NO | X | X | X | NO | |
| PRACTICE, M804/M804A1 | NO | NO | X | X | X | X | X | X | X | X | X | X | NO | X | X | X | X | NO | |
| ROJECTILE, M898 (SADARM) | NO | NO | X | X | NO | X | X | X | X | X | X | X | X | X | X | X | X | X | M577A1 Fuze must be marked "M898 SADARM Compatible" |

## 5-4 AUTHORIZED FUZES.

**WARNING**

The firing of a field artillery round without a fuze or with an unauthorized fuze is strictly prohibited as an inbore explosion may result.

**NOTE**

For additional information and more detailed descriptions on functioning of the authorized fuzes, refer to TM 43-0001-28 and TM 43-0001-28-2.

### 5-4.1 Fuze, Point-Detonating: M557, M572, M739 Series or Mk399 MOD1.

5-4.1.1 Fuze, Point-Detonating, M557 or M572. The M557/M572 fuzes have a selective superquick/delay setscrew. It is packed set for superquick and has a booster attached. Premature functioning can occur when fuzes are fired in heavy precipitation (rain, snow, sleet, hail). This fuze can be set for superquick or delay action by turning the setscrew. The M572 fuze is identical to the M557 except for epoxy under the steel ogive. The M572 is handled, set and fired the same as the M557.

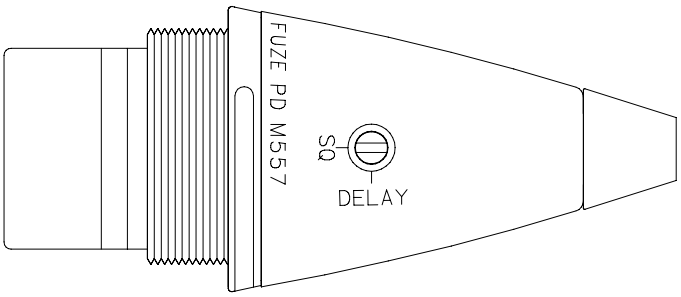


M557 FUZE

02pc102m

5-4.1.2 Fuze, Point-Detonating, M739 and M739A1. These fuzes are the latest improved version of the selective impact fuze. These fuzes have a solid aluminum ogival body with a threaded base. These fuzes contain a rain-insensitive fuze head that allows firing in heavy rain without premature fuze functioning of the round of ammunition. These fuzes can be set for superquick or delay action by turning the setscrew. The M739A1 fuze contains a new impact delay module which provides more effective functioning in the delay mode. In addition to the stamped markings, the M739A1 fuze features anodized green for positive identification of fuze model.

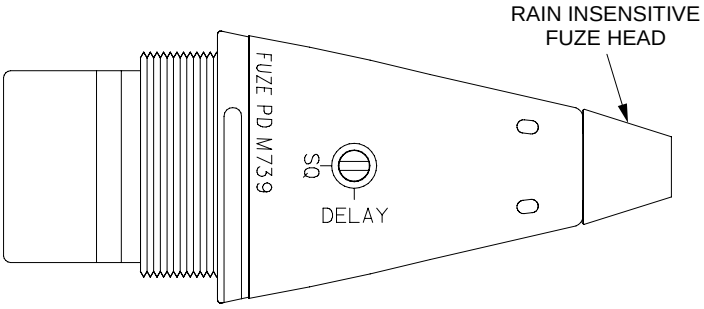


M739 SERIES FUZE

02pc103m

## 5-4 AUTHORIZED FUZES - CONTINUED

5-4.1.3 Fuze, PD, M399 Mod 1. The Mk 399 MOD 1 MOUT fuze is primarily for use against urban structures (buildings) and other hard targets such as bunkers. Its primary design is for penetration of wood, brick or concrete and function inside the target. It therefore is delivered to the field set in the DLY (delay) mode to accomplish this task. The fuze has a setscrew that can be turned by a flathead screwdriver or M18 fuze wrench to select PD or DLY function. When set PD, the fuze functions superquick which is more effective in destroying walls of urban targets and bunkers, can provide a conventional PD fuze role against personnel, and is useful for spotting purposes. The fuze is assembled with a booster pellet and set on the DLY mark for shipping. The fuze is rain sensitive.

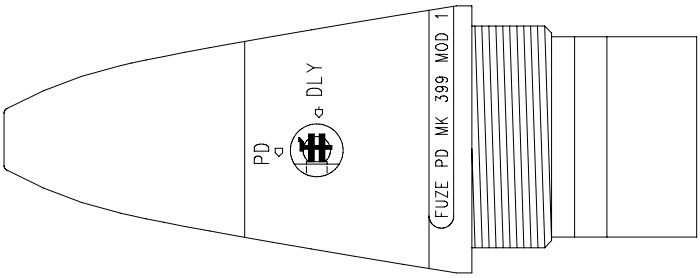


FUZE, PD, M399 MOD 1

02pc412m

MK 399 Mod 1 Summary Matrix of Expected Performance Against MOUT targets.

| | Wood Frame | | | | Single Brick | | | | Triple Brick | | | | Reinforced Concrete | | | |
|---|---|---|---|---|---|---|---|---|---|---|---|---|---|---|---|---|
| Obliquity angle ⇨ | 0° | 30° | 45° | 60° | 0° | 30° | 45° | 60° | 0° | 30° | 45° | 60° | 0° | 30° | 45° | 60° |
| | | | | | | | | | | | | | | | | |
| 155 mm M107/M795 low zone | M[1] | M[1] | M[1] | M[1] | G | G | G | G | G | G | M[3] | M[3] | G | G | M[3] | M[3] |
| 155 mm M107/M795 mid zone | G | G | G | G | G | G | G | G | G | G | M[3] | M[3] | G | G | M[3] | M[3] |
| 155 mm M107/M795 high zone | G | G | G | G | G | G | G | G | M[2] | M[2] | G | G | M[2] | M[2] | G | G |
| | | | | | | | | | | | | | | | | |
| 155 mm M549/A1 | G | G | G | G | P[1] | P[1] | P[1] | P[1] | P[1] | P[1] | P[1] | P[1] | P[1] | P[1] | P[1] | P[1] |

| |
|---|
| G = good |
| M= marginal |
| P = poor, not recommended |

NOTES:

Always be prepared to use multiple rounds to defeat targets.

Obliquity angle of 0° = perpendicular to target wall.

M[1] - for lighter wood frame construction at low zone, insufficient impact force may result in duds.

M[2] - perpendicular and near perpendicular impacts against harder targets at high zone can result in functions on the wall before penetration.

M[3] - at low and mild zones, impact angles at and beyond 45 degrees can result in duds.

P[1] - RAP rounds not recommended against MOUT targets, projectile may break-up upon impact.

## 5-4 AUTHORIZED FUZES - CONTINUED

### 5-4.2 Fuze, Mechanical Time Superquick, M564.

This fuze is an improvement over the older MTSQ fuzes, in that it provides a longer timing mechanism (100 seconds) for functioning at longer ranges. The date of manufacture is stamped on the fuze body before the lot number. Fuzes manufactured through 1969 must be set on 90 seconds if superquick (impact) action is desired. Setting of these fuzes between S and 2 seconds may result in functioning after approximately 2 seconds. Fuzes manufactured from 1970 on may be set as shipped on S for superquick (impact) functioning. However, current doctrine dictates that all M564 fuzes, regardless of manufacture date, must be set on 90 seconds if superquick (impact) action is desired. Premature functioning of the fuze may occur downrange if the fuze is fired in heavy precipitation (rain, snow, sleet, hail).

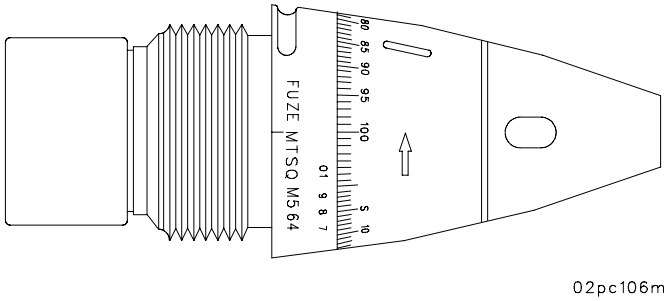


SUPERQUICK M564 FUZE

## 5-4 AUTHORIZED FUZES - CONTINUED

### 5-4.3 Fuze, Mechanical Time, M565.

a. The M565 mechanical time (MT) type is similar to M564 MTSQ fuze except that the M565 fuze does not contain the point-detonating assembly or the booster assembly.

b. The M565 fuze can be set from 2 to 100 seconds. Like the M564 fuze, the M565 fuze has a vernier scale to assure a setting accuracy of 0.1 seconds. The fuze is used with base-ejection projectiles only.

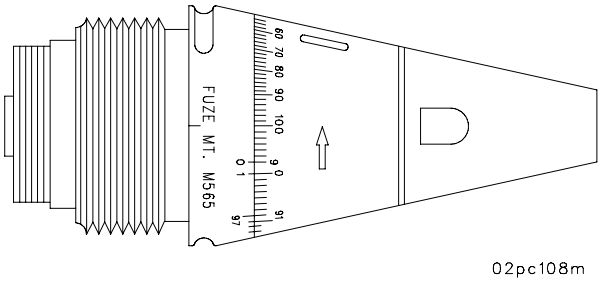


M565 FUZE

### 5-4.4 Fuze, Proximity, Variable Time, M728.

**WARNING**

The M728 and M514 series fuzes are not to be used with the M203/M203A1 propelling charge to prevent serious injury or death to personnel.

These long intrusion proximity variable time (VT) fuzes are used with deep-cavity projectiles and are essentially a self-powered radio and transmitting unit. The fuzes can be set from 5 to 100 seconds. The nose of the M728 fuze has been painted (black) to reduce static electricity.

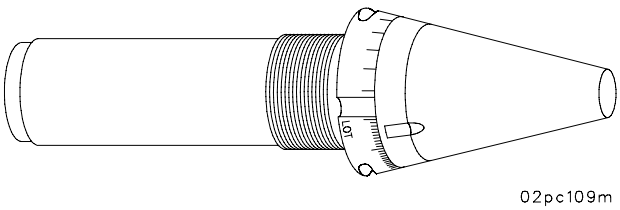


M728 FUZE

## 5-4 AUTHORIZED FUZES - CONTINUED

### 5-4.5 Fuze, Proximity, Variable Time, M732 Series.

**NOTE**

The PD setting of the M732 VT fuze series, when fired into soft impact areas, will produce less lethality than the superquick setting of the M739 PD fuze series.

The M732 Series Fuzes are short intrusion fuzes and are used without removing supplemental charges from projectiles. These fuzes contain a self-powered radio and transmitting unit. The M732 fuze can be set from 5 to 150 seconds. The M732A2 Fuze can be set from 4 to 156 seconds. At time settings, these fuzes arm at 3 to 5 seconds prior to set time for proximity function. These fuzes can also function PD as an option or proximity mode back-up and are always armed for PD at 400 calibers.

The M732A2 was especially designed fro compatibility with rocket-assisted rounds. The M732A2 is set by simultaneously depressing two push-buttons in the ogive and rotating the setting ring to the desired position. When the push-buttons are released, the setting ring is locked into position.

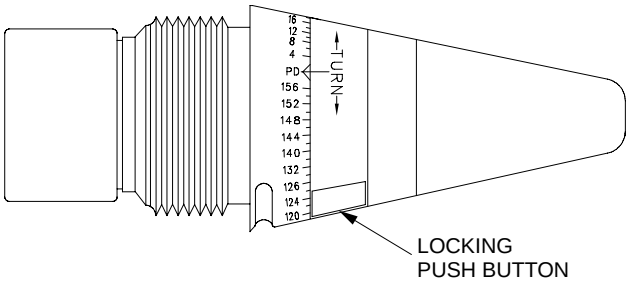


M732E2

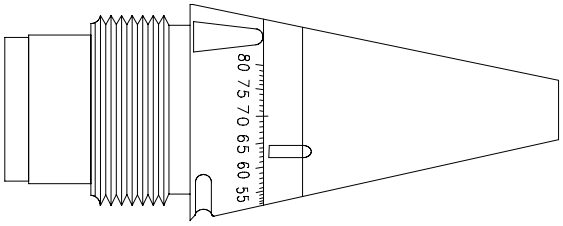


M732

02pc111m

### 5-4.6 Fuzes, Mechanical Time Superquick, M577 Series and M582 Series.

These fuzes have a 200 second mechanical time mechanism with three movable digital dials similar to a speedometer. Each fuze has a window through which the dials are viewed. The dials permit setting of the fuze to the nearest tenth of a second. The M577A1 and M582A1 MTSQ fuzes contain a different mechanism for point detonating action. Externally the major difference is the configuration of the wrench slots. The M577A1 and M582A1 fuzes are handled, set, and fired, the same as the basic models. Early manufactured basic and A1 fuzes have black paint finished ogive, while the later produced A1 fuze has a gold (chromite finish) color ogive.

a. The dial closest to the fuze nose indicates the time in hundreds of seconds. (The triangle (◀) position is a nontime setting.) The second dial indicates time in ten second intervals. The third dial indicates the nearest second and also tenths of seconds by using the scale on the right edge of the dial.

b. The M582 fuze is fitted with a booster and is used with burster type projectiles. The M577 fuze does not contain a booster, and is used with base-ejection projectiles.

c. The M577 fuze can be used with a special spotting charge when firing the M483A1 projectile in the self-registration mode (para 5-9.4).

d. If M577 and M582 fuzes are set for time and the timing mechanism fails, the fuze may or may not function on impact.

## 5-4 AUTHORIZED FUZES - CONTINUED

### 5-4.6 Fuzes, Mechanical Time Superquick, M577 and M582 Series - Continued

e. These fuzes can be set with the M35 fuze setter or a flat-tip screwdriver. The time-setting key is located on the end of the fuze nose. The desired time is set under the hairline. Detailed setting instructions are outlined in paragraph 5-11.

f. The fuzes are not sensitive to rain.

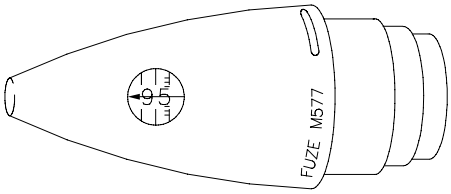


M577 SERIES FUZE

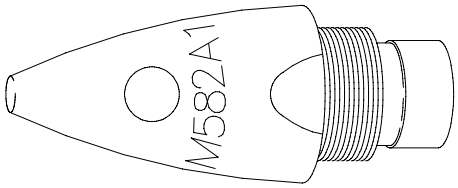


M582 SERIES FUZE

02pc112m

M577A1 FUZE

### 5-4.7 Fuze, Electronic Time (ET), M762 and M767 Series.

**NOTE**

Once activated, the M762 and M767 series fuzes cannot be turned off; therefore the fuzes have approximately 15 days service life before the battery runs down and the LCD goes blank.

a. These fuzes are powered by a reserve lithium battery. The battery is activated manually by rotating the ogive or remotely via inductive auto-set fire controls or a portable hand held inductive fuze autosetter. An electronic subassembly contains integrated circuits that provide controls and logic for 199.9 seconds electronic timing and transmit a fire pulse signal for time function. A liquid crystal display (LCD) provides a visual readout of the fuze setting, as follows:

(1) The column closest to the base end indicates time in hundreds of seconds (the triangle (◀ ) position is a nontime setting).

(2) The second column away from base end indicates time in tens of seconds.

(3) The third column away from base end indicates time in seconds.

(4) The fourth column (closest to nose end) indicates time in tenths of seconds.

## 5-4 AUTHORIZED FUZES - CONTINUED

### 5-4.7 Fuze, Electronic Time (ET), M762 and M767 Series - Continued

b. These fuzes contain an electromechanical safe and arming mechanism (S&A). When set for time function, the S&A provides overhead safety by arming at 50 milliseconds before set time. For this reason, if the fuze impacts before a time setting expires, there will be no PD back-up function. For PD setting, the S&A arms the fuze at 0.45 seconds in flight. Upon impact, a crush switch assembly (contained in the ogive) senses the impact and transmits a fire signal for PD action.

c. These fuzes can be set either by hand (rotating ogive) and depressing selector and cocking button or remotely by a weapon equipped with auto-set fire control system. Detailed setting instructions are outlined in paragraph 5-11.5. The settings can be changed as many times as required for the duration of the activated life of the battery.

d. These fuze bodies are anodized gold. The rear portion of the ogive is coated with a gold phosphate finish. The forward portion of the ogive is brown plastic for the basic fuzes and black plastic for the M762A1 and M767A1 fuzes. The nose cap is unpainted bronze for the M762/M767 and stainless steel for the M762A1/M767A1 fuze.

e. The M762 series fuze does not contain a booster and is used with base-ejection projectiles. The M767 series fuze is fitted with a booster for firing with burster type and high explosive projectiles.

f. The M762 series fuze can be used with a special spotting charge when firing the M483A1 and M864 projectiles in the self-registration mode. See para 5-9.4.

g. If these fuzes fail in the time mode, there is no PD backup function.

h. The fuzes are not sensitive to rain.

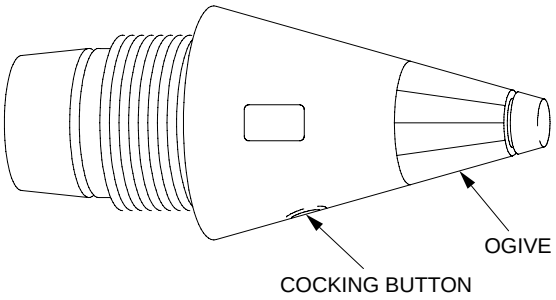


M767 SERIES FUZE

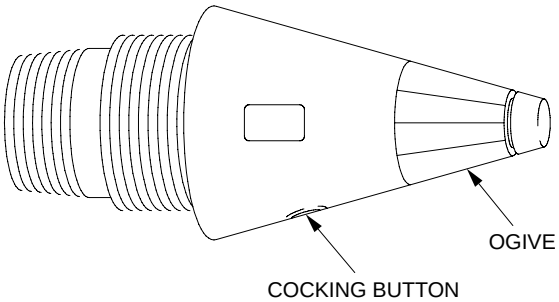


M762 SERIES FUZE

02pc113m

## 5-4 AUTHORIZED FUZES - CONTINUED

### 5-4.8 Fuze, Artillery, Multi-Option (MOFA): M782

These fuzes are intended for use with fragmentation (HE loaded) and burster-type projectiles. They are automatically remote set prior to launch via an inductive communication link. There are four functional modes on these fuzes, point detonating (PD), delay (DLY), variable time (VT), and time (TIME). An electronic subassembly containing integrated circuits provides control and logic for 199.9 seconds electronic timing, and transmits a fire pulse signal for time and proximity functions. The mission data transferred from the M1155 Portable Inductive Artillery Fuze Setter (PIAFS) to the fuze is confirmed by the setter and is displayed on a Liquid Crystal Display (LCD) module found on the setter. The readout provided for the fuze setting is as follows:

**Fuze Menu**

| | | |
|---|---|---|
| | M762 | DM-52 |
| | M767 | DM-74 |
| → | M782 | *MORE* |
| | C32 | *QUIT* |

**Fuze Setting Menu**

| | | | |
|---|---|---|---|
| | FUZE | : | M782 |
| → | MODE | : | VT |
| | TIME | : | 187 sec |
| | SET FUZE | | |

**Mode Menu**

→ TIME
VT
DELAY
PD

**Time Menu**

1 0 0 . 0 sec

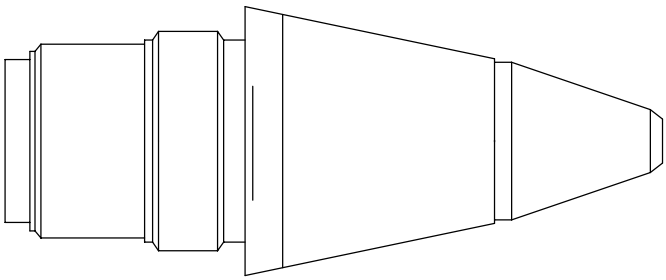

MULTI-OPTION FUZE ARTILLERY (MOFA), M782

02pc414m

MOFA utilizes a standard M739 Safety and Arming (S&A) mechanism that is housed in a retaining cup just below the detonator block. Both setback and spin locks are used to prevent accidental arming of the S&A prior to firing. This S&A mechanism provides a safe separation distance of at least 400 calibers of projectile travel when fired.

These fuzes are set remotely by a weapon equipped with auto-set fire control system or by a Portable Inductive Artillery Fuze Setter (TM 9-1290-210-12&P). The setting can be changed as many times as required.

This fuze is not sensitive to rain.

## 5-5 PROPELLING CHARGES.

**WARNING**

Some propelling charges may have primer MK2A4 packed inside the container. This primer is not authorized for firing the M284 cannon.

### 5-5.1 Propelling Charge, M3A1.

This is a green bag charge divided into a base and four increments for firing in charges 1 thru 5. It has a flash reducer pad assembled in front of the base charge with similar 1 ounce (28.35 g) pads assembled in front of increments 4 and 5. The increment bags are tied together by cloth straps. A clean-burning igniter charge in a red cloth bag is sewn to the rear of the base section.

This is a green bag charge similar to the M3A1 propelling charge, except it is not assembled with flash reducer pads and black powder is used in the igniter pad.

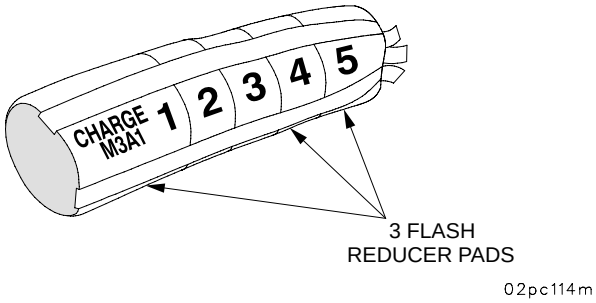


M3A1 PROPELLING CHARGE (GREEN BAG)

### 5-5.2 Propelling Charge, M4A2.

This is a white bag charge consisting of a base charge and four increments for firing in charges 3 thru 7. The increments are tied together by cloth straps. A clean-burning igniter charge in a red cloth bag is sewn to the rear of the base section. It has a flash reducer pad assembled in front of the base charge.

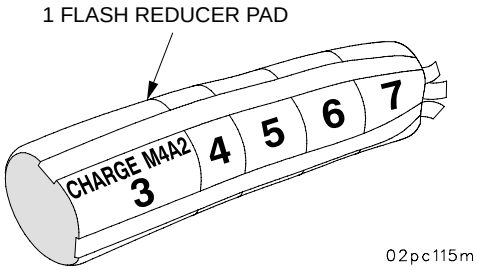


M4A2 PROPELLING CHARGE (WHITE BAG)

## 5-5 PROPELLING CHARGES - CONTINUED

### 5-5.3 Propelling Charge, M119A1.

**WARNING**

A central ignition core in M119A1 and M203 charge extends through the center of the charge for its entire length. The M119A1 and M203 charges must be stored and transported in a horizontal position so that any possibility of damage to the core in the form of cracks or splits is eliminated.

It is a single charge 8 and contains some design improvements including a modified flash reducer. The modified flash reducer allows firing of this charge with the M549 and M549A1 projectiles. A pull strap has also been added to the M119A1 charge that provides easier removal from the metal container. This pull strap must be removed from the charge before loading into the weapon tube.

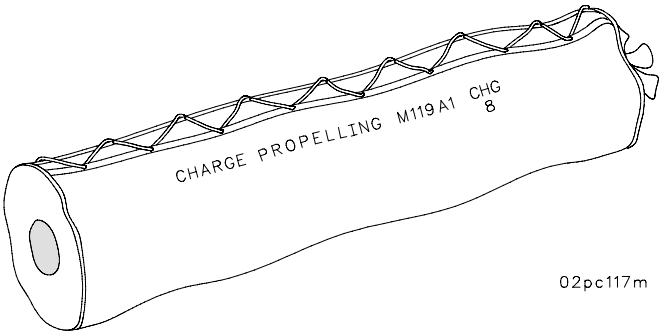


M119A1 PROPELLING CHARGE (WHITE BAG)

### 5-5.4 Propelling Charge, M119A2.

This charge differs in appearance from the M119A1 in that it has no lacing jacket and the charge bag is red. It is a base ignited charge 7 with an igniter pad sewn on the base and a flash reducer which lines the side of the charge. Like the M119A1, it can be fired with the M549 and M549A1 projectiles. The igniter protector cap and tie strap must be removed prior to firing the charge. The M119A2 charge 7 is equivalent to the M119A1 charge 8.

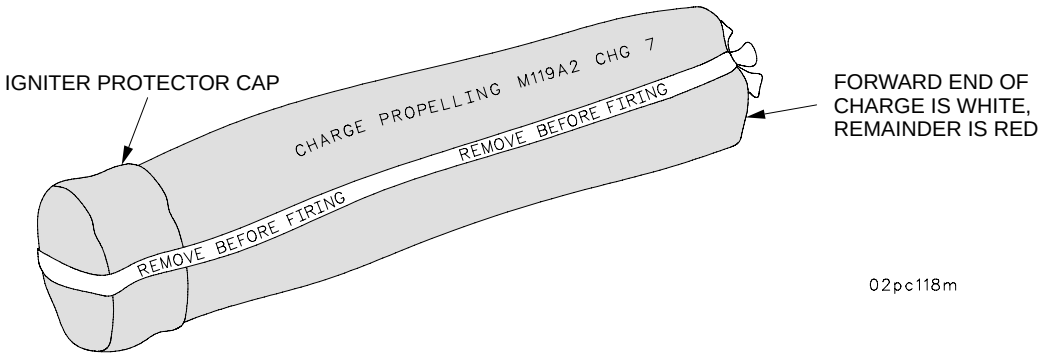


M119A2 PROPELLING CHARGE (RED BAG)

## 5-5 PROPELLING CHARGES - CONTINUED

### 5-5.5 Propelling Charge, M203.

**NOTE**

- Early production of M203 charges are marked charge 8S (i.e., super). Later production M203 charges are marked charge 8. The charges are ballistically equivalent and should be identified as charge 8, red bag.
- Do not attempt to unlace propellant.

The M203 propelling charge is a charge 8 propelling charge developed for extended range in long-tube (M284) 155MM howitzers. This red bag charge consists of one increment with an igniter bag sewn on its base, a central core igniter extending through the center of the charge, and a flash reducer in front of the charge. The entire length of the charge is encased in a tight-fitting lacing jacket for added strength and stability.

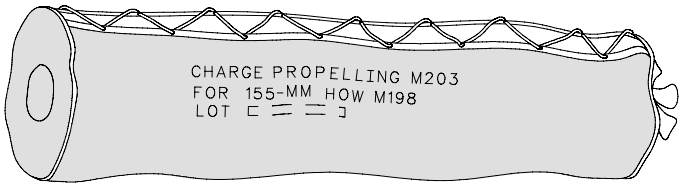


M203 PROPELLING CHARGE (RED BAG)

### 5-5.6 Propelling Charge, M203A1.

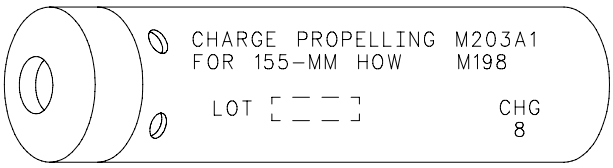


M203A1 PROPELLING CHARGE

02pc120m

**WARNING**

Use M203A1 propelling charge in M109A6 howitzers, as they are equipped with M284 long-tube cannon.

The M203A1 propelling charge like the M203 is a charge 8 propelling charge developed for extended range in long-tube (M284) 155MM howitzers. This charge consists of one increment of stick propellant and a base igniter pad encased in a full length rigid combustible cartridge case. The charge also contains a wear reducing additive and a lead foil decoppering agent. The M203A1 charge 8 is ballistically equivalent to the M203 red bag charge 8.

## 5-5 PROPELLING CHARGES - CONTINUED

### 5-5.7 Propelling Charge, M231.

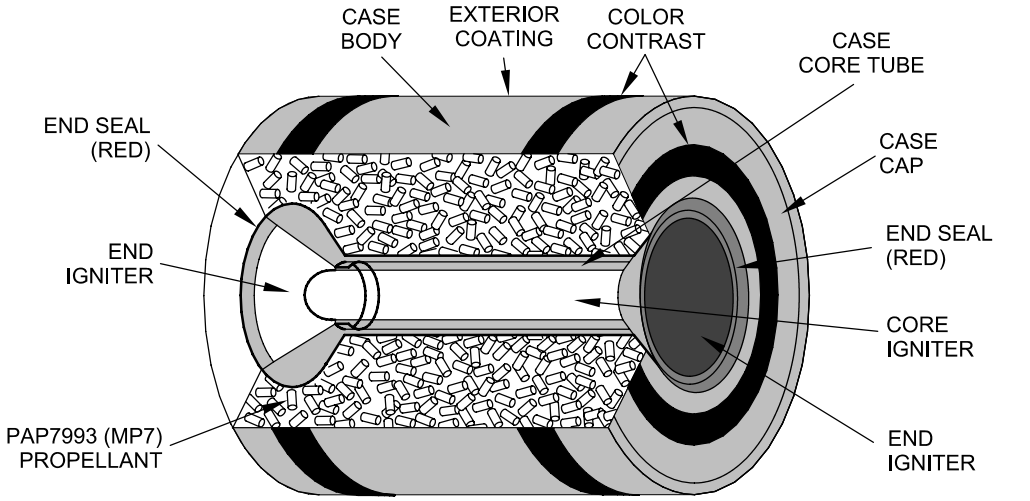


M231 PROPELLING CHARGE

02pc419m

The M231 propelling charge is comprised of a green-colored, coated, nitrocellulose-based combustible case with black markings and black bands. This charge is bi-directional (can be loaded in either direction). The M231 is fired in increments of 1 or 2 for charges 1 and 2.

### 5-5.8 Propelling Charge, M232.

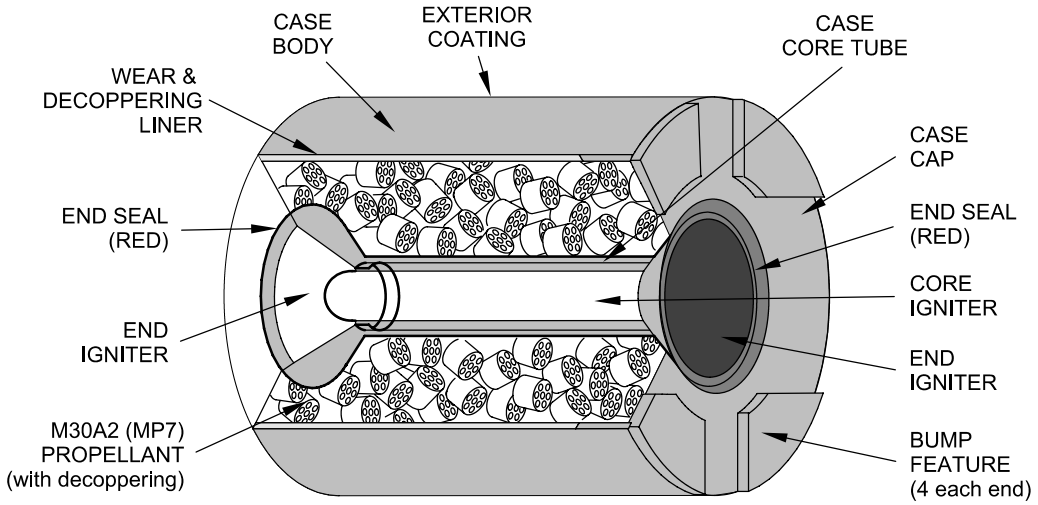


M232 PROPELLING CHARGE

02pc420m

The M232 propelling charge is comprised of a tan-colored, coated, nitrocellulose-based combustible case with black markings. This charge is bi-directional (can be loaded in either direction). Each end has four raised 1/8-inch bumps. The M232 is fired in increments of 3 through 5 for charges 3 through 5.

## 5-5 PROPELLING CHARGES - CONTINUED

### 5-5.9 Propelling Charge, M232A1.

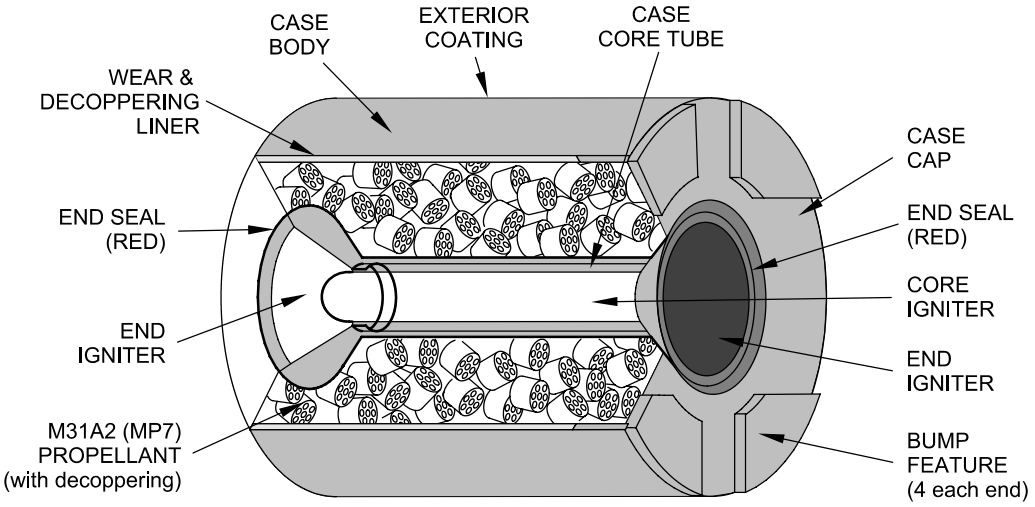


M232A1 PROPELLING CHARGE

02pc421m

M232A1 propelling charge is comprised of a tan-color, coated, nitrocellulose-based combustible case with black markings. This charge is bi-directional (can be loaded in either direction). Each end has four raised 1/8-inch bumps. The M232A1 is fired in increments of 3 through 5 for charges 3 through 5.

## 5-6 PRIMER, M82.

**WARNING**

The M82 is the only primer authorized for firing in the M284 cannon. DO NOT FIRE THE MK2A4 IN THIS CANNON. TURN THEM INTO THE AMMUNITION SUPPLY POINT.

The primer, which is loaded separately from the projectile, is inserted into the primer chamber. When the cannon is fired, the firing pin strikes the primer which in turn ignites the charge, propelling the projectile forward.

02pc121m

M82 PRIMER

## 5-7 FLASH REDUCER, M2 (T2).

The flash reducer pads serve to limit breech flashback, as well as muzzle flash and blast overpressure. This flash reducer consists of a red cotton cloth bag, 4 inches (10.16 cm) square, containing black powder and potassium sulfate or potassium nitrate.

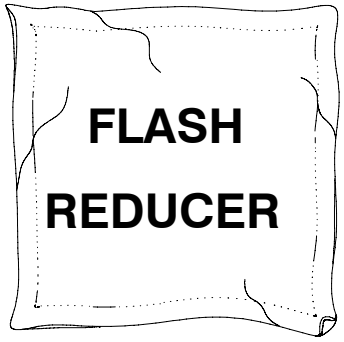


02pc122m

M2 FLASH REDUCER

## Section II. PREPARATION FOR FIRING

## 5-8 GENERAL.

### 5-8.1 Temperature Limits.

**WARNING**

To ensure that projectile upper temperature limit stays below +125°F (+52°C), it must be shaded when the weather is expected to be hot; i.e., the outside temperature is expected to exceed +100°F (+38°C) during the day.

Unless otherwise specified, observe the following limits when firing:

a. Lower limit is -40°F (-40°C).

b. Upper limit is +125°F (+52°C).

### 5-8.2 Temperature Check Procedures for MACS, M231 and M232/M232A1.

**NOTE**

Temperature will be taken using the standard issue M1A1 powder thermometer. The operating temperature of MACS is -50° F through +145° F.

a. Lift the edge of the red end seal on either end of the increment and peel the seal back approximately halfway.

**WARNING**

Do not jab the round end igniter bag with thermometer or any other object that may be used to break through the edge of the red end seal. Black powder is impact sensitive and forceful impact of the bag may cause an accidental ignition.

**NOTE**

- Do not puncture the combustible case since this makes the increment defective.
- Make sure thermometer is removed prior to loading charge.

b. Lift the edge of the end igniter bag and insert the powder thermometer under the end igniter bag and down along the inside of the case core tube.

c. The thermometer must stay in the increment until the temperature stabilizes.

## 5-8 GENERAL - CONTINUED

### 5-8.3 Packing and Unpacking Ammunition Components.

Retain packing materials for repackaging, as required.

a. The M3A1 propelling charge is packed two per metal container, with or without the MK2A4 primer. The M4A2, M119A1, M119A2, and M203 propelling charges are packed one per metal container.

**WARNING**

The M82 is the only primer authorized for firing in the M284 cannon. DO NOT FIRE THE MK2A4 IN THIS CANNON. The propellant may not ignite. TURN THEM INTO THE AMMUNITION SUPPLY POINT.

b. The M231 is packed with four increments (two per extraction sleeve) in each metal container. The M232/M232A1 is packed five increments per extraction sleeve in each metal container. Extraction sleeves that are not full will be combined to reduce the number of partially loaded containers. These increments will be repacked into their correct type of sleeve with the repacked sleeves returned to their correct container (correct type and lot number) using the following procedures:

(1) Place one of the end cushions into the end of the extraction sleeve and lock in placing using the velcro strap.

(2) Slide the correct amount of charges (two for the M231 and five for the M232/M232A1) into the open end of the extraction sleeve.

(3) Slide the separators between the charges, making sure they slide all the way in. The bumps on the M232/M232A1 must be aligned for the separators to slide all the way in.

(4) Place second cushion into the open end of the sleeve and lock in place using the second velcro strap.

(5) Slide extraction sleeve with charges into the container and close.

(6) Mark partially loaded containers so that they are not turned in as empty.

c. The M82 primer is packed one per waterproof bag. Primers are ready for firing when unpacked and should be protected from blows that might cause accidental functioning.

d. The M2 (T2) flash reducer is packed 200 per metal container (four containers, 800 flash reducers per wooden box).

e. Fuzes are generally packed in metal boxes. The metal boxes are then packed in wooden boxes.

f. Refer to para 5-21 for unpacking and inspection procedures for the M712 Copperhead (HEAT) and M823 training projectiles.

## 5-8 GENERAL - CONTINUED

### 5-8.4 Procedures.

**WARNING**

Inspect your ammunition. Failure to accomplish required inspections can result in unnecessary malfunctions causing injury or death.

**CAUTION**

Do not use axes, crowbars, etc. which may damage ammunition or packaging.

a. Inspect ammunition components and verify item identification.

b. Unpack ammunition and perform inspections indicated in para 5-21.

c. Return all defective ammunition to ammunition supply point (ASP).

### 5-8.5 Field Artillery Projectile Pallet (FAPP).

a. General. The FAPP is a NBC decontaminable, non-flammable, reusable metal pallet. It allows for easy repalletization in the field with no special tools required. The FAPP consists of a steel pallet base, steel pallet cover and two adjustable rods that hold the cover to the base. The two adjustable rods hold securely the FAPP without any banding needed. There are plastic spacers under the base of the projectile and on top of the lifting plug to prevent abrasion. The FAPP holds up to eight 155MM projectiles with a minimum of two projectiles and it accommodates both the plastic grommet and the flexible rotating band cover (FRBC) for rotating band protection. Before loading the FAPP with projectiles, the latch rods must be assembled to the pallet base. The center of the pallet is loaded first to avoid tipping over. Once the FAPP is loaded, the pallet cover with the handles in open position is placed over the projectiles. The pallet cover is then closed by pushing the handles down into the lock position.

## 5-8 GENERAL - CONTINUED

### 5-8.5 Field Artillery Projectile Pallet (FAPP) - Continued

b. Instructions. Complete instructions for assembling, loading, and unloading the FAPP are found in TM 9-1300-251-20&P, Unit Maintenance Manual, Artillery Ammunition for Guns, Howitzers, Mortars, Recoilless Rifles, and 40-mm Grenade Launchers, and TM 9-1300-251-34&P, Direct Support and General Support Maintenance Manual, Artillery Ammunition for Guns, Howitzers, Mortars, Recoilless Rifles and 40-mm Grenade Launchers.

| PROJECTILE | ROD LENGTH | BASE SPACERS |
|---|---|---|
| M107, M110 SERIES, M449 SERIES, M485A1, M804 SERIES | 24.5 INCH | 5.5 INCH WIDE - GREEN |
| M795 | 30 INCH | 5.9 INCH WIDE - BLACK |
| M549 SERIES | 31.5 INCH | 5.5 INCH WIDE - GREEN |
| M483A1, M692, M718, M731, M741, M864, M898 | 32 INCH | 5.9 INCH WIDE - BLACK |

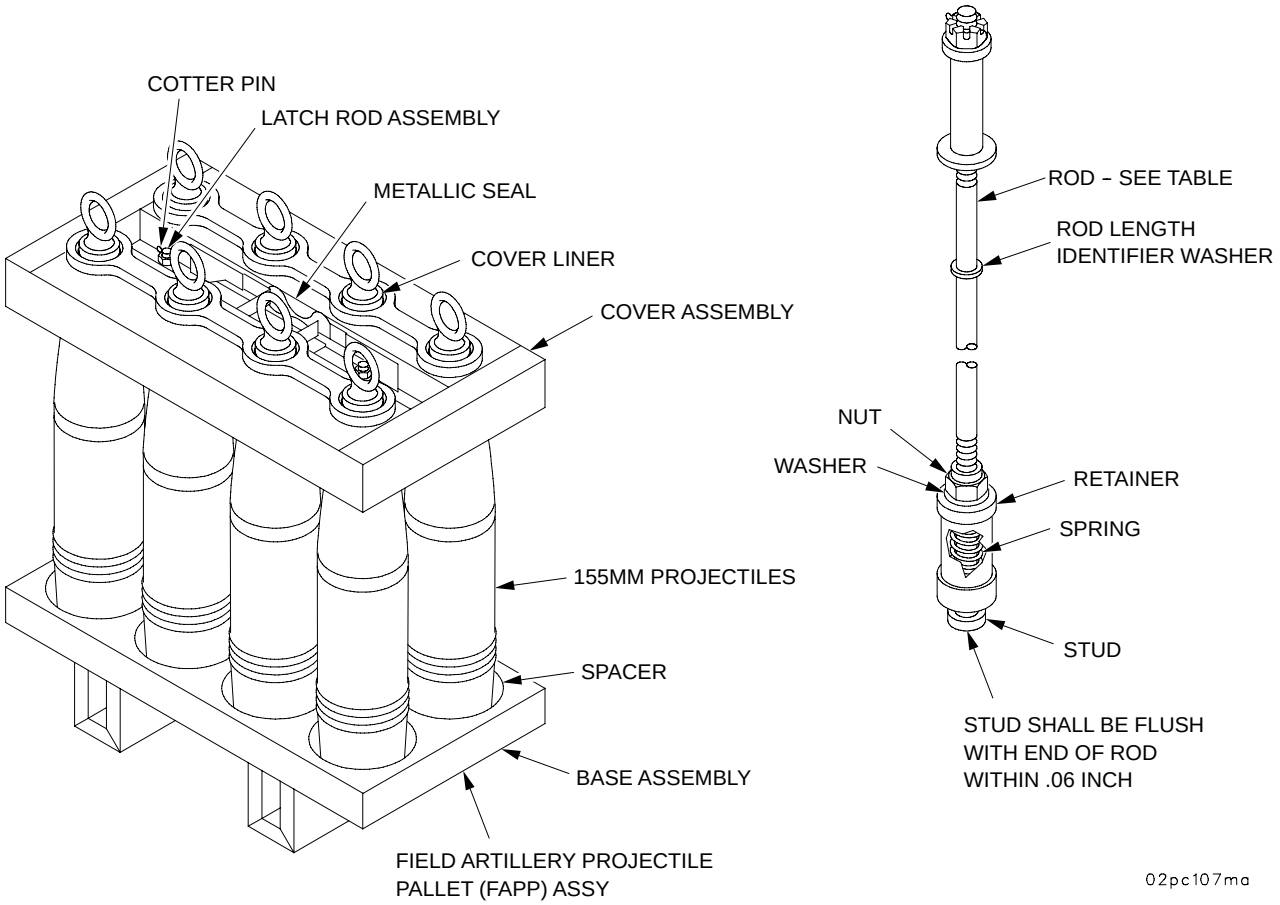

## 5-8 GENERAL - CONTINUED

### 5-8.6 Flexible Rotating Band Cover (FRBC).

a. General. The FRBC, as well as the grommet, is used to protect the rotating band of artillery projectiles from corrosion, dirt, and damage during transportation, handling, and storage. The FRBC can be discarded or replaced in the event of NBC contamination. The FRBC consists of a cloth band with hook and loop attachable ends. Once the FRBC is wrapped around the projectile rotating band, it has to be pulled on the two ends until it is tight against the rotating band. The FRBC is then closed by pressing the loop end against the hook end of the fastener and the words “REMOVE BEFORE FIRING” visible in the upright position.

b. Replacement. The FRBC should be replaced if any of the following occurs:

(1) The FRBC doesn’t stay firmly on with sufficient resistance to opening.

(2) The FRBC exhibits cuts that expose the rotating band.

(3) The FRBC marking is unreadable due to age and wear.

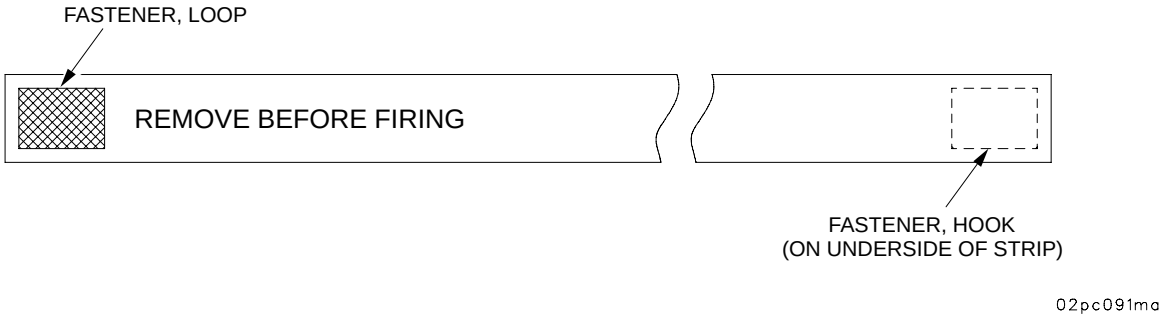


## 5-9 PREPARATION FOR FIRING.

Preparation for firing the four components of a complete round of 155MM ammunition requires efficient teamwork among the crew. They must quickly and accurately select, unpack, inspect, and prepare the correct primer, propellant, projectile, and fuze from the fire commands received by the howitzer section. The chief of section must thoroughly cross-train the entire crew so that any crewman can perform any or all of the duties required of other crewmembers.

### 5-9.1 Primer, M82.

Do not open the moisture protective bag until ready to use the primer. Cannoneer loads the primer.

### 5-9.2 Propelling Charges.

Propelling charges come packed in hermetically sealed metal containers. There is one complete charge in each container of the M4A2, M119 series and M203 series charges. The M3A1 green bag charge is packed with two complete charges in each metal container. Check the following when preparing the propellant for firing:

## 5-9 PREPARATION FOR FIRING - CONTINUED

### 5-9.2 Propelling Charges - Continued

a. Select the right charge announced in the fire command.

b. Unpack the charge from the metal container and inspect the charge for torn cloth, loose powder grains, or discoloration of the cloth bags.

c. For M203A1 propelling charge only, pull pull-straps until the buttons on the base igniter assembly clear the mouth of the container. Grasp charge around the buttons and pull charge out of the container, supporting it along its length to avoid dropping the charge. Do not fire charges which have severely crushed or distorted cases and/or contain missing or broken propellant.

d. Remove the igniter cap and inspect the red igniter pad. The pad should not be torn or wet. The igniter powder grains are highly hygroscopic (will absorb moisture); the grains could stick together, which could cause misfires. The igniter powder grains should move freely inside the pad to show that they are not stuck together. Unserviceable charges should be set aside for disposal by authorized personnel.

e. Check the smell of the powder charge and its container. There should not be a sour, acid smell as this indicates the charge became wet. There should be a sweet ether-like smell, indicating that the charge is fresh.

f. Remove any excess powder increments (those increments with a higher number than called for in the fire command), and retighten the tie straps so that all powder increments are secure, with the highest numbered charge (per fire command) on top.

g. Place the unused powder increments in a secure container and dispose of them later by burning under the supervision of an officer.

### 5-9.3 Modular Artillery Charge System (MACS).

The MACS propelling charges are combustible case type charges that are packed in hermetically sealed metal containers. The M231 MACS is packed with four increments (two per extraction sleeve) in each metal container. The M232/M232A1 MACS is packed with five increments per extraction sleeve in each metal container. Check for the following when preparing propellant for firing:

a. Select the right charge announced in the fire command.

b. Unpack the charges from the metal container by pulling on the velcro strap removing the sleeve with the MACS enclosed from the container. Remove separator assembly by pulling on the connecting strap. Open the velcro strap and remove end cushions from either end of the sleeves. Push the needed amount of MACS from the opposite end of the sleeve through the now open end of the sleeve. Charges that are severely crushed, distorted, or broken are not to be fired.

c. Check the red end seals on the end of the charges. If the seal is torn, punctured, or missing, inspect the end igniter bag. The pad should not be torn or wet. The igniter powder grains are highly hygroscopic (will absorb moisture); the grains will stick together, which could cause misfires. The igniter powder grains should move freely inside the pad to show that they are not stuck together.

d. Unused MACS charges are repacked for later use.

### 5-9.4 Projectiles.

Projectiles for these howitzers normally come packed eight to the pallet, with top and bottom of the wooden pallets banded together or of the metal pallets (FAPP) secured together with rods. (For preparation of M712 projectile (Copperhead), see section IV of this chapter.) Each projectile has a lifting plug and a grommet or a flexible rotating band cover (FRBC) attached for protection during shipping and handling activities. Refer to para 5-19.4 for the LPRS, an optional system for securing loose, unfuzed projectiles for transportation.

## 5-9 PREPARATION FOR FIRING - CONTINUED

### 5-9.4 Projectiles - Continued

**WARNING**

Do not remove the grommet or flexible rotating band cover (FRBC) from the projectile until it is ready to be fired. If the grommet or flexible rotating band cover (FRBC) has been removed and the projectile is not fired, the grommet or FRBC should be replaced. Handling or transporting projectiles without a grommet or FRBC is likely to cause damage to the obturator band as well as to the rotating band.

**NOTE**

These procedures apply to all projectiles, except for the M483A1 and M864 projectile when used in the self-registration mode.

Cannoneer selects the right projectile announced in the fire commands and prepares it for firing as follows:

a. Inspects and cleans projectile.

(1) Verifies that the projectile is the type designated by the fire commands.

**NOTE**

A projectile with a burred rotating band will be put aside until the burrs can be removed with a file.

(2) Removes grommet or flexible rotating band cover (M795 projectile) and examines rotating band to ensure that it is free from all dirt and burrs.

(3) Cannoneer removes lifting plug and gasket and examines the fuze well for leaks or damage to the filler. If any high-explosive filler residue clings to the threads of the fuze well, the round is rejected and another one is used to complete the fire mission.

**WARNING**

Dirt or grease left on the projectile rotating band could cause failure of the projectile to seat properly in the forcing cone. Firing of an unseated projectile could result in inbore explosion causing injury or death to personnel.

**NOTE**

Any sand, dirt, oil, or grease left on the projectile will cause wear, scratches, or gouges in the bore.

(4) Cannoneer examines the entire projectile for defects and checks to see that the projectile is not damaged or corroded and is free of dirt, grease, sand, and oil. Slight rust on the projectile is acceptable.

## 5-9 PREPARATION FOR FIRING - CONTINUED

### 5-9.4 Projectiles - Continued

b. Cannoneer holds the projectile upright for fuzing and fuze setting.

(1) If required, gunner holds the projectile firmly while cannoneer fuzes the projectile and sets the fuze.

(2) When directed, cannoneer reads and announces the time set on the fuze.

**WARNING**

Care must be exercised in placing the ammunition in the hull to prevent damage to the rotating band or fuze and bodily harm to the ammunition handler.

c. Cannoneer carries fuzed projectile to the howitzer and places it where it will be convenient for loading.

### 5-9.5 Special Preparation of the M483A1 or M864 Projectile for Use in the Self-Registration Mode.

When the command for use of the M483A1 ICM projectile includes the self-registration mode, the expulsion charge inside the nose of the projectile must be removed and a projectile spotting charge threaded on the fuze as follows:

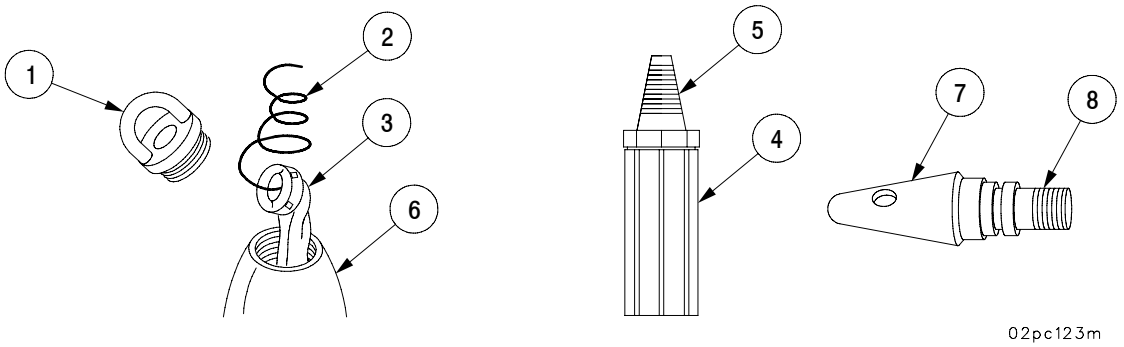


a. Remove the fusible or universal lifting plug (1) with attached gasket. When lifting plug is removed, the compressed coiled pull-wire (2) on the bagged expulsion charge assembly (3) will expand and protrude beyond the fuze well of the projectile ogive. If the projectile is assembled with the cylindrical plastic expulsion charge assembly (4), the tab (5) will pop up.

b. Remove the expulsion charge assembly (3) or (4) by grasping and firmly pulling the pull-wire (2) or tab (5). Set charge assembly aside for disposition. Visually inspect the fuze well (6) for loose grains of propellant or other foreign material. Remove any loose material.

**WARNING**

When screwing the projectile spotting charge onto rear of the M577 series fuze or M762 fuze, ensure that shoulder of projectile spotting charge is seated squarely against shoulder of fuze. An improperly seated charge could cause a malfunction.

## 5-9 PREPARATION FOR FIRING - CONTINUED

### 5-9.5 Special Preparation of the M483A1 or M864 Projectile for Use in the Self-Registration Mode - Continued

**CAUTION**

When assembling projectile spotting charge to fuze, be careful to avoid damaging threads. If binding occurs, consider charge unserviceable and report it for disposition. If binding has occurred, reinspect fuze to assure it is still serviceable.

c. Obtain an M577 series fuze or an M762 fuze (7) and a projectile spotting charge (8) (1320-00-171-0760 D003).

d. If firing the M483A1 or M864 projectile in the self-registration mode, screw the projectile spotting charge (8) handtight on the M577 series or the M762 fuze (7) (left-hand thread).

## 5-10 FUZE PREPARATION.

### 5-10.1 General.

There are four basic type fuzes: impact, mechanical time, electronic time, and proximity variable time (VT) fuzes. On command, “FUZE”, select the right fuze, unpack, inspect, install it in the projectile, and set it as commanded (TIME, SUPERQUICK, DELAY).

### 5-10.2 Lifting Plug Removal.

**WARNING**

- Do not use a projectile with explosive on the threads or evidence of explosive powder seepage. It could cause detonation of the projectile, if fired.
- Do not use the M549/M549A1 projectile if the lifting plug has been broken. Do not attempt to extract any portion of the plug from the fuze well of the projectile. Return projectile to the supply point.

a. Remove plug and inspect the filler beneath the plug.

b. Inspect cavity and projectile threads for damage. Remove loose material from cavity. If any high explosive is found stuck to the threaded portion of the projectile throat, do not fire.

## 5-10 FUZE PREPARATION - CONTINUED

### 5-10.3 Supplementary Charge.

**WARNING**

- Do not fire point-detonating (PD), mechanical time superquick (MTSQ), electronic time (ET), or the short intrusion variable time (VT) fuzes in a deep-cavity projectile without the supplementary charge, as an inbore premature detonation (or function) may result.
- Do not attempt to remove supplementary charge by any means other than the lifting loop. Use of screwdrivers or other tools to remove the charge by force is dangerous.

For the long intrusion proximity fuze firings, remove supplementary charge by means of its lifting loop. If the charge cannot be removed by its lifting loop, either fire with a short intrusion VT, PD, ET, or MTSQ fuze or dispose of the round.

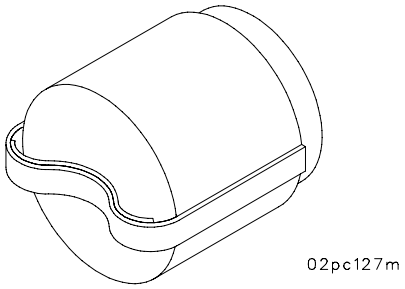


SUPPLEMENTARY CHARGE

## 5-10 FUZE PREPARATION - CONTINUED

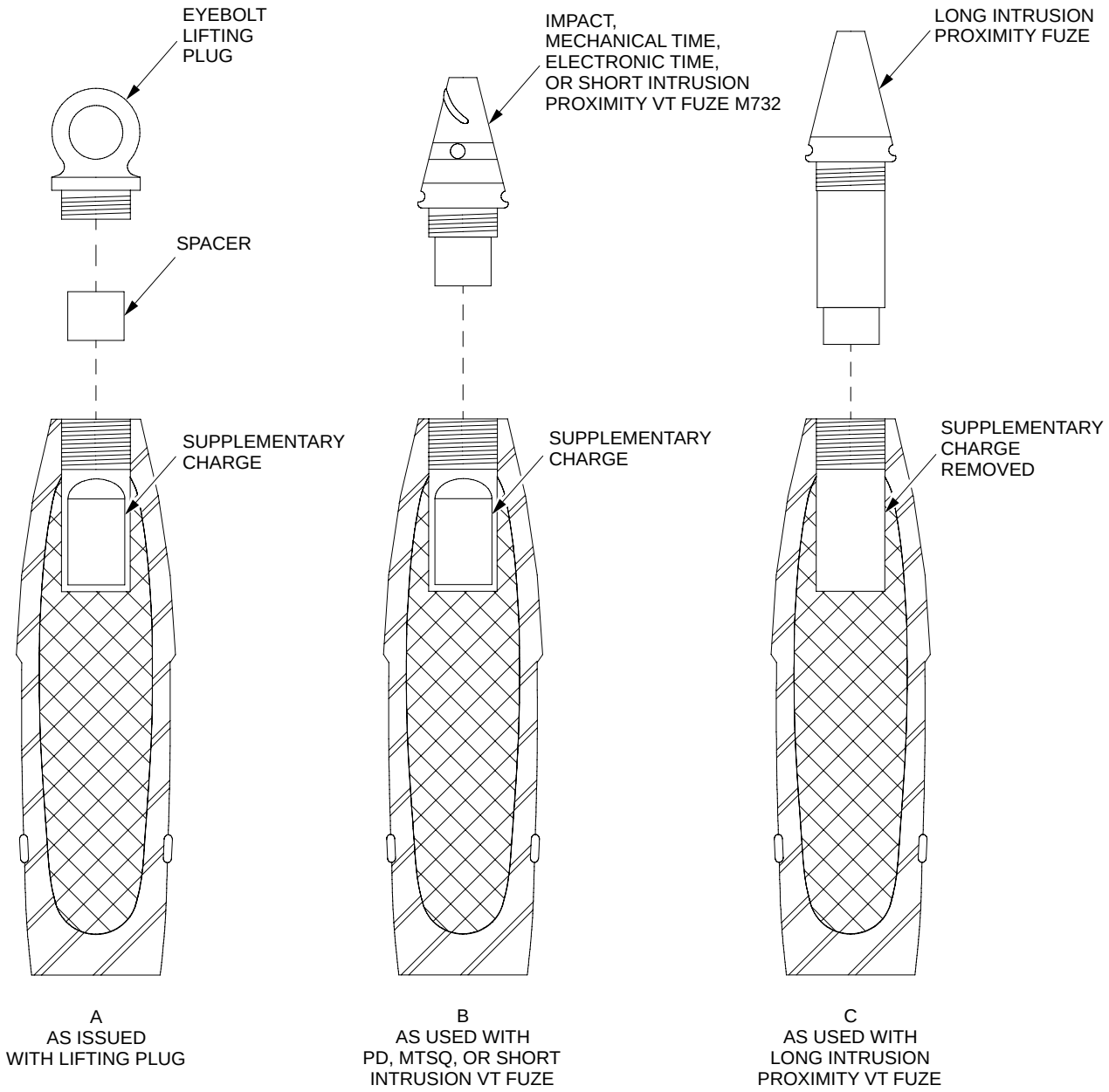


TYPICAL DEEP-CAVITY PROJECTILES

02pc126m

## 5-10 FUZE PREPARATION - CONTINUED

### 5-10.4 Fuze Assembly.

**NOTE**

- The following procedures apply to all fuzes.
- For proximity fuzes with a gap between the fuze shoulder and projectile, either replace the supplementary charge and fire with impact PD, ET, or MTSQ or short intrusion (VT) fuze, or dispose of round.

a. Screw fuze in by hand. If binding occurs, inspect fuze cavity and threads of both fuze and projectile. Reject whichever is at fault.

**WARNING**

- Rounds fired without a fuze or with improperly seated fuzes may result in premature functioning.
- When tightening fuze to projectile, do not hammer on fuze-setter wrench or use extension handle on fuze-setter wrench. Do not stake fuze to projectile under any circumstance. Shocks transmitted to fuzes during assembly may cause malfunction.

**CAUTION**

Always be sure that the supplementary charge is in the deep cavity projectile before adding fuze-booster combination.

b. After assembling fuze by hand, back fuze off 1/4 turn. Using M18 fuze-setter wrench, tighten fuze to projectile with a sharp snap of the wrench so that the fuze shoulder is seated firmly against the projectile nose.

## 5-10 FUZE PREPARATION - CONTINUED

### 5-10.4 Fuze Assembly - Continued

c. If projectile setscrew is present, tighten to below level of contour of projectile.

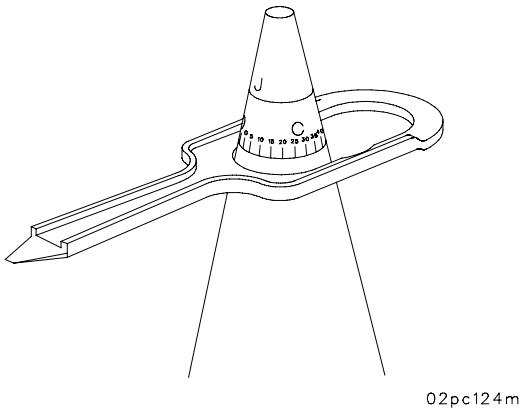


### 5-10.5 Special Preparation for the M577 Series Fuze.

**WARNING**

When screwing the projectile spotting charge on to the rear of the M577 series fuze, ensure that the shoulder of the projectile spotting charge is seated squarely against the shoulder of the fuze. An improperly seated charge could cause a malfunction.

**CAUTION**

When assembling the projectile spotting charge to a fuze, be careful not to damage threads. If binding occurs, consider the charge unserviceable and report it for disposition. If binding has occurred, reinspect the fuze to ensure it is still serviceable.

Inspect the fuze setting. The fuze will be considered unserviceable if the setting is not between ◀ 93.5 and ◀ 95.5, the fuze shows signs of damage, or the window is blackened or sooty inside.

## 5-11 FUZE SETTING.

Fuze-setting tools and procedures are listed in this table.

### Table 5-4. Fuse, Fuze-setting Tools, and Procedures

| FUZE | | | | | | | | SETTER | PROCEDURE #1 PARAGRAPH NUMBER |
|---|---|---|---|---|---|---|---|---|---|
| MOFA | ET | PD | | MT | MTSQ | | PROX | | |
| M782 | M762/ M767 SERIES | M557 M572 | Mk399 MOD1 M739 | M565 | M564 | M577/ M582/ SERIES | M732 M728 M514 SERIES | | |
| | | X | X | | | | | Fuze-setter wrench, M18 | 1/5-11.1 |
| | | | | | | | X | M27 | 2/5-11.2 |
| | | | | X | X | | | M34 | 3/5-11.3 |
| | | | | | | X | | M35 | 4/5-11.4 |
| | X | | | | | | | N/A | 5/5-11.5 |
| X | | | | | | | | M1155 | 6/5-11.6 |

### 5-11.1 Procedure Number 1, Fuzes, M557, M572, Mk399 MOD1, or M739 Series.

**NOTE**

Point-detonating (PD) fuzes, with superquick (SQ) or delay functioning are set shipped for SQ action. The Mk399 MOD1 MOUT fuze is shipped set on the DLY (Delay) mark.

a. If superquick action is desired, check the setting to make sure it is set at SQ.

b. To set fuzes for delay action, use screwdriver end of the M18 fuze-setter wrench or similar tool and turn slot 1/4 turn to align with index mark indicating DELAY.

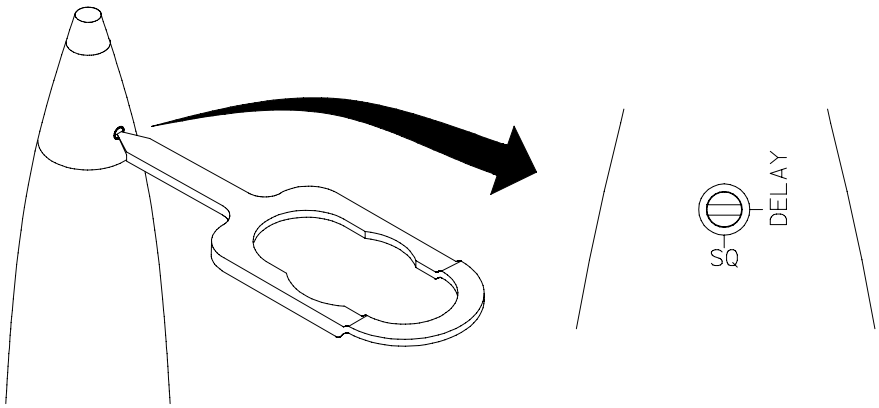


02pc128m

## 5-11 FUZE SETTING - CONTINUED

### 5-11.2 Procedure Number 2, Fuzes, M728, M514 and M732 Series Proximity VT Fuzes.

**WARNING**

- Do not fire projectile unless fuze is fully seated. Inbore explosion may result.
- Do not attempt to set fuze until just before firing.

**CAUTION**

The plastic nose cones rotate with the index mark. Damage to the plastic cone will produce duds. However, since there is no backlash, fuze setting can be accomplished or changed one or more full turns without harmful effect. If counterclockwise rotating is used, be sure that the fuze has not become loosened from the projectile.

**NOTE**

- M514 and M728 fuzes are shipped with the index mark on the nose cone set at 10 seconds. The M732 fuze is shipped with the index mark aligned with PD. The M514 and M514B1 fuzes are shipped with the index mark aligned with the 1/8". The M514A1 fuze is shipped with the index mark aligned with the shipping line (long vertical arrow).
- Rotation of the M732 fuze nose cone has been experienced at top zones (not a safety hazard). If this occurs when M732 fuze is set on time for proximity function, PD function might occur instead. In such instances, set the fuze to a time of 10 seconds less than the time of flight for proximity function. If nose cone rotation occurs when the M732 fuze is set on PD mark, proximity functioning may occur instead of impact functioning. In such instance, set the fuze to a time equal to time of flight plug 10 seconds for impact function. The PD setting of the M732VT fuze when fired into soft impact areas will be less deadly than the superquick (SQ) setting of the M739 PD fuze.

## 5-11 FUZE SETTING - CONTINUED

### 5-11.2 Procedure Number 2, Fuzes, M728, M514 and M732 Series Proximity VT Fuzes - Continued

a. To set fuze for proximity action, rotate nose cone with the M27 fuze setter, normally in the clockwise direction, while looking down on the nose of the fuze, until the index mark coincides with the announced time. Fuze setting can be changed one or more times with no harmful effects.

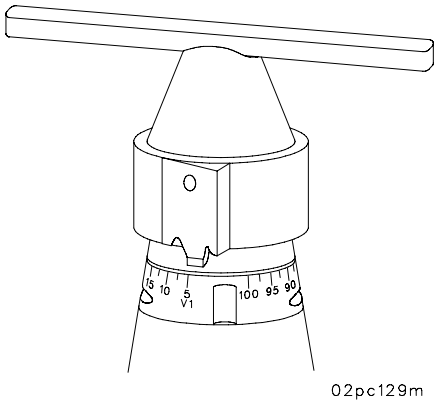


b. The M732A2 fuze is set manually by simultaneously depressing two pushbuttons in the ogive and rotating the setting ring to the desired position. When the pushbuttons are released, the setting ring is locked into position.

c. For impact functioning of fuzes M728, and M514 series, set fuzes on PD mark using the M27 fuze setting. On some models the PD mark coincides with 90 seconds proximity setting.

d. The fuze is set when index line at base of nose cone is aligned with time, in seconds, engraved on base of fuze.

e. Firing temperature limits for M728 and M732 series proximity fuzes are -40° to +140°F (-40° to 60°C) and 0°F to 120°F (-18°C to +49°C) for M514 series.

f. For impact functioning of fuze M732, set fuze on PD mark using the M27 fuze setter.

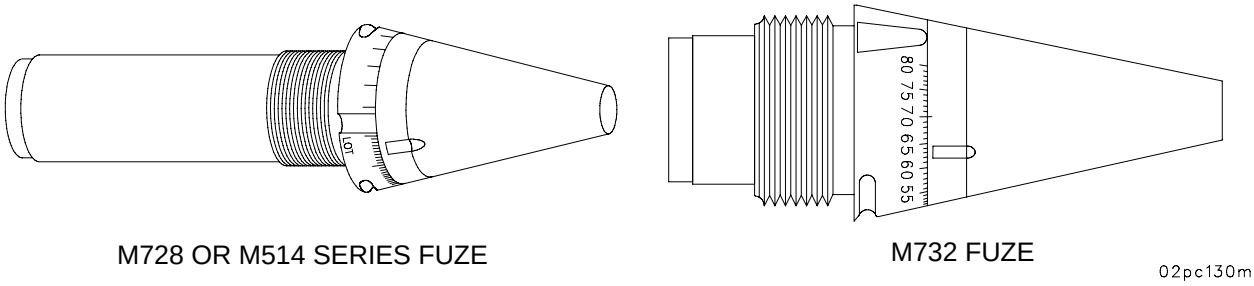


M728 OR M514 SERIES FUZE

M732 FUZE

## 5-11 FUZE SETTING - CONTINUED

### 5-11.3 Procedure Number 3, Fuzes, M564 and M565.

5-11.3.1 Setting M564 Fuze for Superquick (Impact) Action. If the M564 fuze is to be fired for super quick action (impact) only, first check the year of manufacture stamped on the fuze body. Follow instructions below as appropriate.

**WARNING**

- To avoid accidental functioning of PD element in M564 fuze, do not drop, roll or strike the fuze under any circumstances (packaged, unpackaged or assembled to the projectile).
- Do not attempt to set fuze until just before firing.

M564 fuzes manufactured before January 1970 must be set on 90 seconds if superquick action (impact) is desired. M564 fuzes manufactured from January 1970 on should be left set on “S” for superquick action. The year of manufacture is stamped on the M564 fuze body. These fuzes are shipped with the “S” on the lower cap scale aligned with the “0” on the vernier scale.

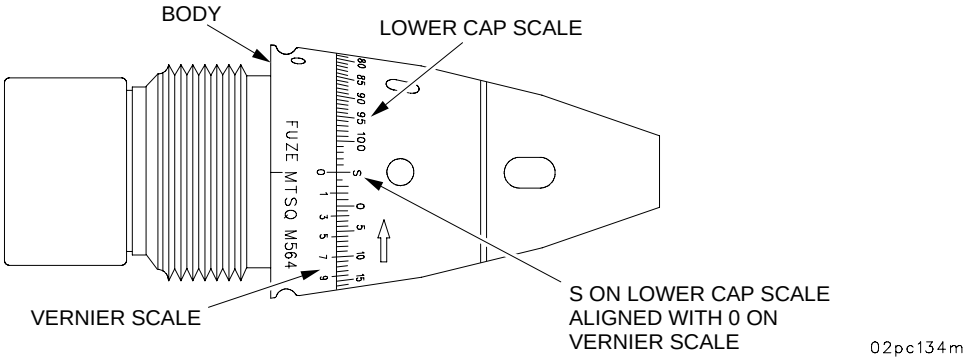

## 5-11 FUZE SETTING - CONTINUED

### 5-11.3 Procedure Number 3, M564 and M565 - Continued

a. For M564 fuzes manufactured prior to January 1970, use M34 fuze setter to rotate the lower cap in the direction of the arrow (clockwise) from shipping “S” position until the 90-second position on the lower cap scale is aligned with the “0” on the vernier scale.

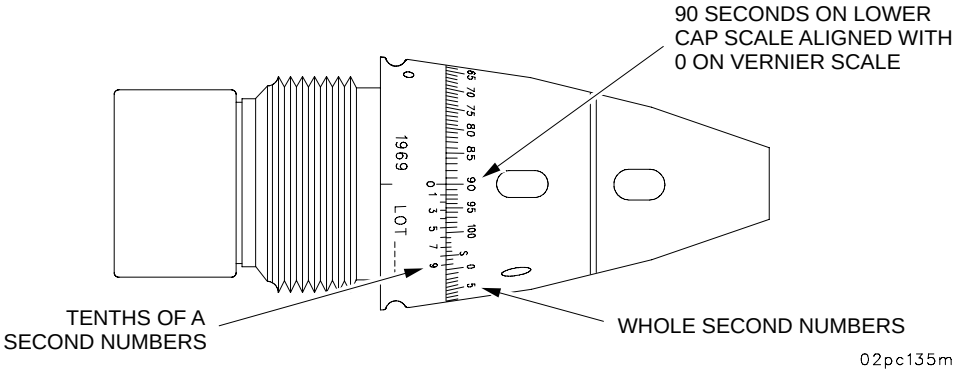


b. For M564 fuzes manufactured in January 1970 and later, set the fuze on “S” as shipped for superquick action. Always be sure the “S” on the lower cap scale is aligned with the “0” on the vernier scale.

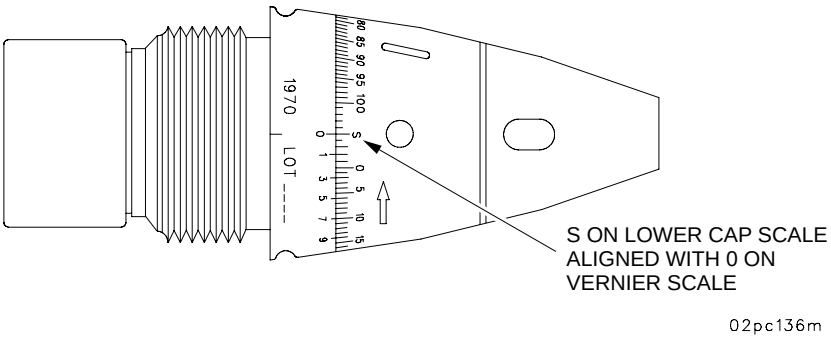

## 5-11 FUZE SETTING - CONTINUED

### 5-11.3 Procedures Number 3, Fuzes, M564 and M565 - Continued

5-11.3.2 Setting M564 and M565 Fuzes for Airburst (Time).

**WARNING**

- Incorrect settings of MT and MTSQ fuzes can and have resulted in downrange premature malfunctions. The safety of personnel located downrange of a weapon firing MT and MTSQ fuzes (between the weapon and the intended target) is in the hands of the gun crew personnel assigned to the job of setting the fuzes.
- Do not attempt to set the fuze until just before firing.

**NOTE**

The whole second fuze setting is always indicated by the position of the “0” on the vernier scale. Each vertical mark on the lower cap scale (moveable portion of the fuze) represents one whole second of time. For other than whole-second settings, the “0” on the vernier scale (nonmoveable portion of the fuze) must always be to the right of the whole-second portion of the desired fuze setting and the next one whole-second vertical mark. For example, for a setting of 20.5 seconds, the “0” on the vernier scale is to the right of the 20-second mark and midway between the 20 and 21-second marks on the lower cap scale.

a. To set the M564 and M565 fuzes for a whole-second time setting use the M34 fuze setter to rotate the lower cap in the direction of the arrow (clockwise), until the desired whole number of seconds (e.g., 20.0 seconds) on the lower cap scale is aligned with the “0” mark engraved on the vernier scale.

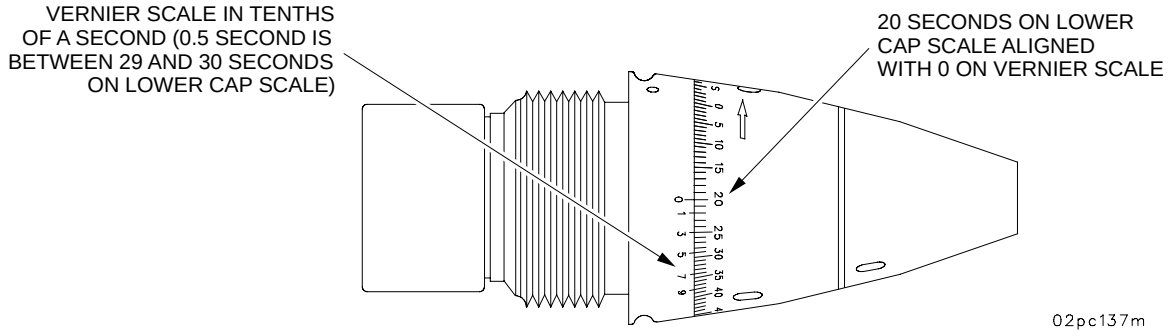

## 5-11 FUZE SETTING - CONTINUED

### 5-11.3 Procedure Number 3, Fuzes, M564 and M565 - Continued

5-11.3.2 Setting M564 and M565 Fuzes for Airburst (Time) - Continued

b. To set the M564 and M565 fuzes for a tenth of a whole second (e.g., 20.5 seconds), use the M34 fuze setter to set the fuze for the whole seconds on the lower cap scale (in this case the whole is 20 seconds). Next find the desired tenth of a second mark on the vernier scale. Continue to rotate the lower cap in the direction of the arrow until the adjacent upper right graduation on the lower cap scale is aligned with the desired tenth of a second mark on the vernier scale. (The 0.5-second mark is now aligned with the 30-second mark on the lower scale.)

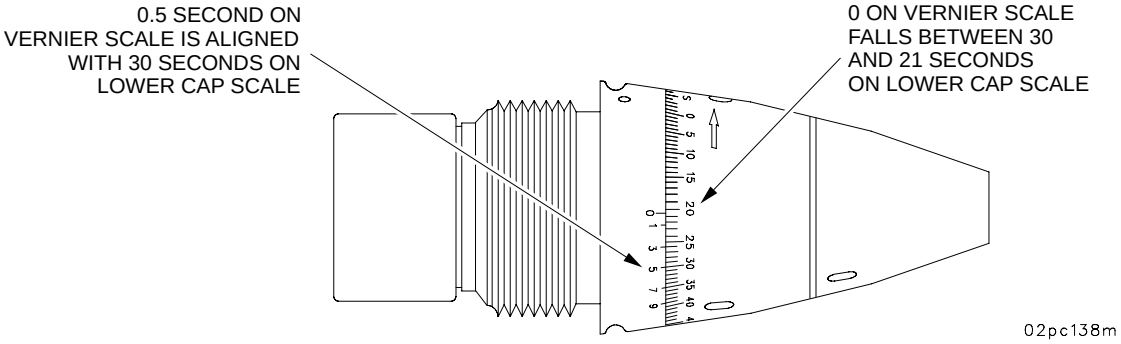


**NOTE**

An incorrect fuze setting for 20.5 seconds is shown below. If a fuze is set in this way for 20.5 seconds firing, the fuze is actually set on and will function at 10.5 seconds. This would cause the fuze to function earlier than desired.

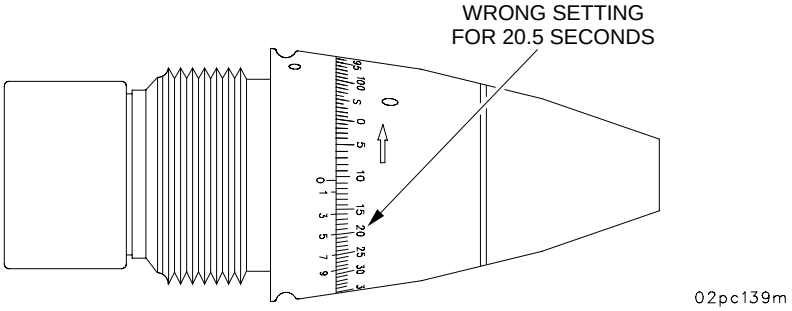


5-11.3.3 Resetting Fuze. If you miss the setting, use the M34 fuze setter and turn the lower cap in the opposite direction (counterclockwise) 2 or 3 seconds below the desired setting. Then rotate the lower cap in the direction of the arrow (clockwise) and set the fuze on the correct time. Always make the final setting from low to high numbers.

## 5-11 FUZE SETTING - CONTINUED

### 5-11.3 Procedure Number 3, Fuzes, M564 and M565 - Continued

5-11.3.4 Fuzes Not Fired. If prepared for firing but not fired, reset the fuze, using M34 fuze setter, by turning the lower cap in the direction of the arrow (clockwise) until the "S" mark on the fuze lower cap scale is in line with the "0" mark on the vernier scale.

5-11.3.5 Fuzes Fired in Heavy Precipitation. If M564 fuzes are fired in heavy precipitation (rain, snow, sleet, hail), occasional downrange premature functioning may occur. The rainfall necessary to cause malfunctioning is comparable to a heavy downpour which occurs during a summer thundershower. The premature rate will vary with the charge fired and the density of the precipitation.

### 5-11.4 Procedure Number 4, Fuzes, M577 Series and M582 Series.

The slotted setting key on the nose of the fuze is used for setting the fuze.

**CAUTION**

Do not attempt to set these fuzes below 93.5 when setting them in the clockwise direction or above 200 seconds when setting them in the counterclockwise direction. The settings of 000 and/or 200 are not authorized service settings.

**NOTE**

The M577 series or M582 series fuze is set to desired time by rotating the fuze setter in a counterclockwise direction. To return to shipping and storage setting, the fuze setter must be rotated in a clockwise direction.

a. Press the open end of M35 fuze setter against the setting key.

DIRECTION OF SETTING OR RESETTING FUZE M577 SERIES OR M582 SERIES

| COUNTERCLOCKWISE | CLOCKWISE |
|---|---|
| SHIPPING AND STORAGE SETTING (◀93.5 to ◀95.5) | 1/4 TURN |
| PD SETTING (◀98.0) | 1/4 TURN |
| 001 SECONDS | 1/4 TURN |
| 200 SECONDS | 20 TURNS |

## 5-11 FUZE SETTING - CONTINUED

### 5-11.4 Procedure Number 4, Fuzes, M577 Series and M582 Series - Continued

b. Turn the knob handle of the fuze setter counterclockwise, as viewed from the nose end, until the fuze setter blade engages fuze setting key slot. The hairline in the window is used for all settings.

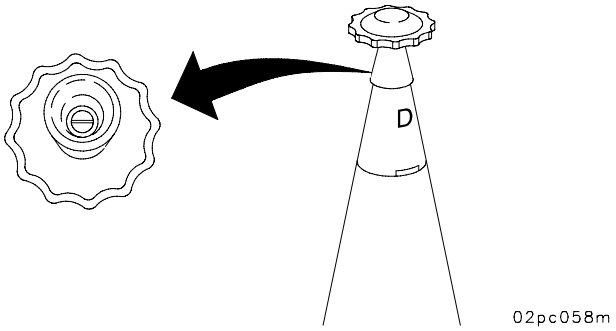


c. When setting the fuze for PD action (superquick), start with shipping and storage position (safe) (◀93.5 to ◀95.5); then turn counterclockwise to ◀98.0 under the hairline window for PD action.

d. To set the fuze for mechanical time action, turn the fuze setter counterclockwise from safe position (◀93.5 to ◀95.5) past PD (◀98.0), until the triangle (◀) moves off the hairline. This action occurs near 000 setting. Continue to turn fuze setter counterclockwise until desired time appears under the hairline. Maintain a very light turning force against the fuze setter while reading the setting. The sequence is shown for settings of 8.7, 25.5, 107.4.

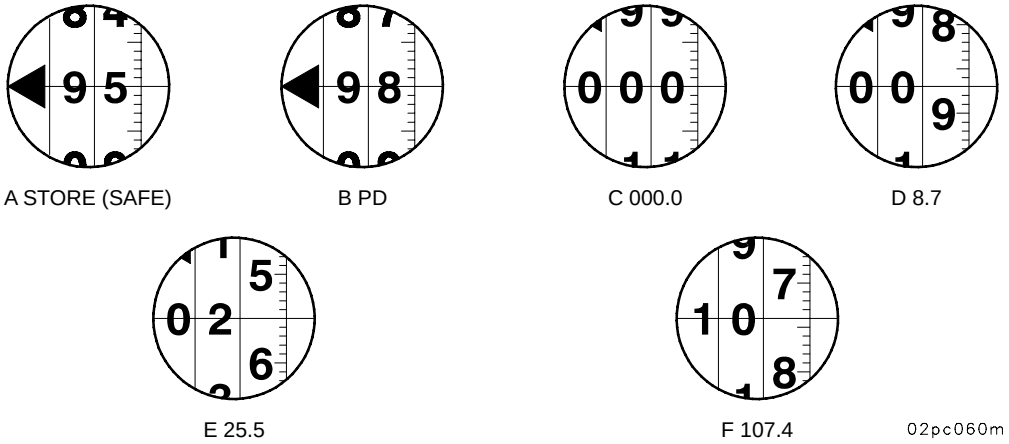


FUZE SETTING SEQUENCE FOR M577 OR M582 FUZES

e. To set a lower time on fuze already set, reseat fuze setter and turn clockwise (numbers get smaller) to a setting at least one second lower than the required setting (for example, at least 24.5 for 25.5). Reverse direction to counterclockwise (numbers get larger) and set required time under the hairline.

## 5-11 FUZE SETTING - CONTINUED

### 5-11.4 Procedure Number 4, Fuzes, M577 Series and M582 Series - Continued

f. To return fuze to the shipping and storage (safe) position, turn the fuze setter clockwise (numbers get smaller) until 000 is passed, and continue to turn until setter stops turning freely. This point should be past the PD setting (◀98.0) and between ◀95.5 and ◀93.5. Notice that the triangle has reappeared in the window. Do not apply excessive force on the fuze setter after it has stopped turning and the setting is between ◀95.5 and ◀93.5. Return the fuze to the reuseable fuze container. The fuze is considered unserviceable after being out of the container for more than 30 days.

g. For special preparation for M577 series fuze, perform the following procedure. Inspect the fuze setting. The fuze will be considered unserviceable if the setting is not between ◀93.5 and ◀95.5, the fuze shows signs of damage, or the window is blackened or sooty inside.

h. Firing temperature limits for M577 series and M582 series M75Q fuzes are -35°F to +145°F (-37°C to +63°C).

### 5-11.5 Procedure Number 5, Fuzes M762 and M767 Series.

These fuzes can be set either by hand or remotely by a weapon equipped with auto-set fire control system, as follows:

**CAUTION**

Do not activate fuzes unless they will be fired before 15 days elapse. Once activated, these fuzes have a service life of approximately 15 days before the battery runs down. Check if LCD is active to determine if fuze is still settable.

a. Setting by Hand.

**CAUTION**

If, after steps (a) and (b) are completed, the LCD display is blank or shows other displays than indicated, the fuze is considered unserviceable and should not be fired.

**NOTE**

The M762 or M767 fuze ogive will rotate only clockwise (as viewed from nose end). If a desired digit was passed, continue rotating clockwise until the desired digit appears again.

## 5-11 FUZE SETTING - CONTINUED

### 5-11.5 Procedure Number 5 Fuzes M762 and M767 Series - Continued

**CAUTION**

If after step (1) and (2) below are completed the Liquid Crystal Display (LCD) is blank or shows other displays than indicated, the fuze is considered unserviceable and should not be fired.

**NOTE**

Once activated, the M762 and M767 series fuze cannot be turned off; therefore, the fuzes have approximately 15 days service life before the battery runs down and the LCD goes blank.

(1) Rotate ogive clockwise at least one quarter revolution to activate the battery. The liquid crystal display (LCD) window will display ◀ 8.88 indicating that all segments are operating as a visual safety check. The ogive of the M762A1 and M767A1 can be rotated bi-directionally to provide quicker manual setting.

(2) Depress the thumb operated cocking and selector button to clear the LCD display. The LCD window will display __ __ __ . __ , ensuring that no segments are stuck.

(3) Depress the thumb operated cocking and selector button a second time; the LCD window will display 000.0. The cursor under the zero in the hundreds of seconds column indicates that this column is ready to be set.

**NOTE**

The hundreds of seconds column can display 0, 1 or ◀ (blank space for M762A1/M767A1) while the tens of seconds, seconds, and tenths of seconds columns each can display 0 thru 9.

(4) Each column is set independently. Depress and release the selector button as required to move the cursor to the desired column. At the desired column, keep the selector button depressed and rotate the ogive to select the desired digit or ◀ . Release the selector button and depress again to move cursor to the next column to continue setting.

FUZE ELECTRONIC TIME (ET), M762 SERIES

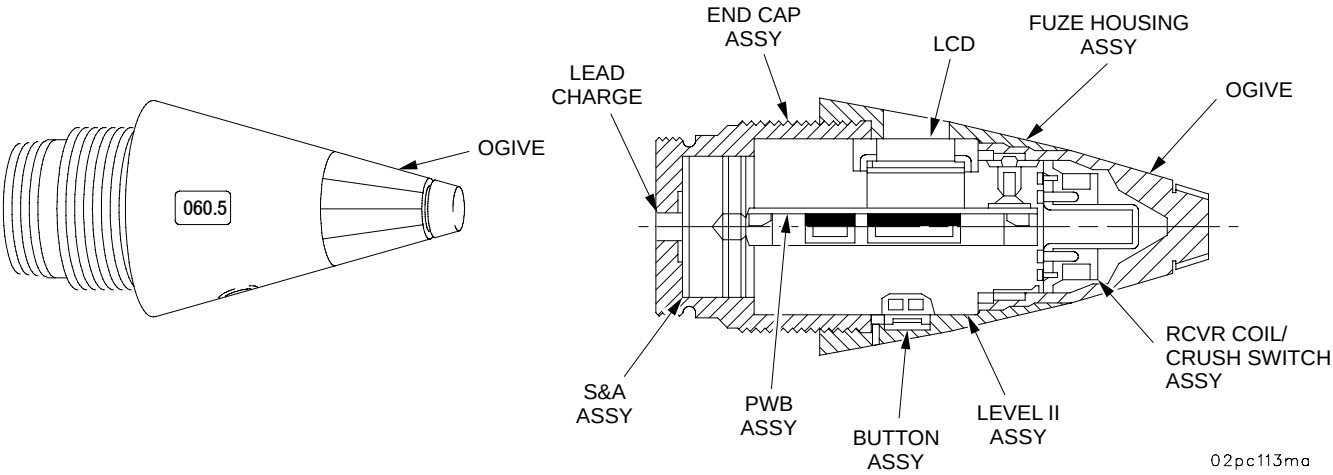

## 5-11 FUZE SETTING - CONTINUED

### 5-11.5 Procedure Number 5, Fuzes, M762 and M767 Series - Continued

(5) For M762 and M767 PD, set the fuze to ◀ 98.0. Any other setting with ◀ would result in a dud.

(6) For M762A1 and M767A1 PD, place cursor in the hundreds digit and rotate the ogive until the _ (underline) is selected. At this point the fuze will be set to the point detonating setting and the display will be "_Pd".

(7) The following are examples of fuze settings.

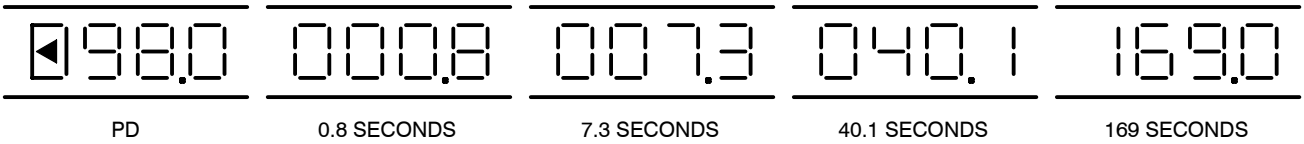


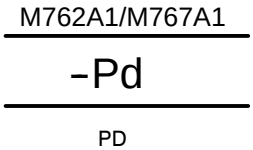


02pc072m

(8) When fuze setting is completed and selector button is released, the ogive can be rotated without changing the fuze setting.

(9) The settings can be changed as many times as required for the duration of the activated life of the battery.

b. To return the fuze to the shipping and storage configuration, reset the fuze to ◀ 000.0. These fuzes should be segregated and used first in subsequent firings. The return to storage configuration can only be accomplished via manual hand set.

c. Firing temperature limits for M762 and M767 series ET fuzes are -45°F to 145°F (-43°C to 63°C).

### 5-11.6 Procedure No. 6, Fuze M782.

This fuze can only be set inductively by a weapon equipped with auto-set fire control system or the Portable Inductive Artillery Fuze Setter (PIAFS) M1155 (TM 9-1290-210-12&P).

Setting by PIAFS M1155

**NOTE**

When the setter is first initialized it displays the Fuze Menu. Afterwards it remembers where it was last and displays the Fuze Setting Menu with the last fuze set.

a. Setting for Point Detonating (PD) mode.

(1) Press the ENTER button to turn on the setter.

# 5-11 FUZE SETTING - CONTINUED

## 5-11.6 Procedure No. 6, Fuze M782 - Continued

**FUZE SETTING MENU**

```
→ FUZE  :   M782
  MODE  :   TIME
  TIME  :   187 sec
  SET FUZE
```

(2) Press the right (↑) or left (↓) buttons to move the cursor (arrow (→) to the left of the items in the menu) to indicate FUZE, then press the ENTER button. The Fuze Menu appears.

**FUZE MENU**

```
  M762      DM-52
  M767      DM-74
→ M782      *MORE*
  C32       *QUIT*
```

(3) Press the right (↑) or left (↓) buttons to move the cursor arrow (→) to indicate M782, then press the ENTER button. The Fuze Setting Menu appears with the cursor pointing to the MODE line.

**FUZE SETTING MENU**

```
  FUZE  :   M782
→ MODE  :   TIME
  TIME  :   187 sec
  SET FUZE
```

(4) Press the ENTER button. The Mode Menu (for the M782) appears.

**MODE MENU (for the M782)**

```
→ TIME
  VT
  DELAY
  PD
```

(5) Press the right (↑) or left (↓) buttons to move the cursor (→) to indicate PD, then press the ENTER button. The Fuze Setting Menu appears with the arrow pointing to the Set Fuze line.

**FUZE SETTING MENU**

```
  FUZE  :   M782
  MODE  :   PD
→ SET FUZE
```

(6) Place setter on the fuze and press the ENTER button. The setter will attempt to set the fuze. After the “WAIT” message is briefly displayed either the “FUZE SET OK” message will be displayed which means that the fuze has been set, or the “FAILED” message will be displayed. In this case try setting another fuze. If both fuzes do not accept the setting then replace the fuze setter and retry setting the fuzes.

# 5-11 FUZE SETTING - CONTINUED

## 5-11.6 Procedure No. 6, Fuze M782 - Continued

b. Setting for Delay (DLY) mode.

The setting procedures for the Delay mode are the same as those for the Point Detonating mode, except for procedure (5). The cursor (→) is moved to indicate DELAY instead of PD.

c. Setting for Variable Time (VT) mode.

(1) Press the ENTER button to turn on the setter.

**FUZE SETTING MENU**

```
→ FUZE   :   M782
  MODE   :   TIME
  TIME   :   187 sec
  SET FUZE
```

(2) Press the right (↑) or left (↓) buttons to move the cursor (arrow (→) to the left of the items in the menu) to indicate FUZE, then press the ENTER button. The Fuze Menu appears.

**FUZE MENU**

```
→ M762      DM-52
  M767      DM-74
  M782      *MORE*
  C32       *QUIT*
```

(3) Press the right (↑) or left (↓) buttons to move the cursor arrow (→) to indicate M782, then press the ENTER button. The Fuze Setting Menu appears with the cursor pointing to the MODE line.

**FUZE SETTING MENU**

```
  FUZE   :   M782
→ MODE   :   TIME
  TIME   :   187 sec
  SET FUZE
```

(4) Press the ENTER button. The Mode Menu (for the M782) appears.

**MODE MENU (for the M782)**

```
→ TIME
  VT
  DELAY
  PD
```

(5) Press the right (↑) or left (↓) buttons to move the cursor (→) to indicate VT, then press the ENTER button. The Time Menu appears with a line (-) cursor under the hundreds place.

**TIME MENU (for the M782)**

1 0 0 . 0 SEC

## 5-11 FUZE SETTING - CONTINUED

### 5-11.6 Procedure No. 6, Fuze M782 - Continued

(6) Press the right (↑) or left (↓) buttons to toggle between 0 and 1 for the hundreds digit, then press the ENTER button. The cursor (-) will move to the tens place.

**TIME MENU (for the M782)**

0 0 0 . 0 SEC

(7) Press the right (↑) or left (↓) buttons to choose a number between 0 and 9 for the tens digit, then press the ENTER button. The cursor (-) will move to the ones place.

**TIME MENU (for the M782)**

0 3 0 . 0 SEC

(8) Press the right (↑) or left (↓) buttons to choose a number between 0 and 9 for the ones digit, then press the ENTER button. The cursor (-) will move to the tenths place.

**TIME MENU (for the M782)**

0 3 5 . 0 SEC

(9) Press the right (↑) or left (↓) buttons to choose a number between 0 and 9 for the tenths digit, then press the ENTER button. The Fuze Setting Menu appears with the cursor pointing to the TIME line showing the set time.

**FUZE SETTING MENU**

FUZE : M782
MODE : TIME
→ TIME : 35.2 sec
SET FUZE

(10) Press the left (↓) button to move the cursor (→) to indicate SET FUZE. Place setter on the fuze and press the ENTER button. The setter will attempt to set the fuze. After the "WAIT" message is briefly displayed either the "FUZE SET OK" message will be displayed, which means that the fuze has been set, or the "FAILED" message will be displayed. In this case try setting another fuze. If both fuzes do not accept the setting, then replace the fuze setter and retry setting the fuzes.

d. Setting for Time (TIME) mode.

The setting procedures for the Time mode are the same as those for the Variable Time mode, except for procedure (5). The cursor (→) is moved to indicate TIME instead of VT.

# 5-11 FUZE SETTING - CONTINUED

## 5-11.6 Procedure No. 6, Fuze M782 - Continued

Firing Temperature

Firing temperature for the M782 fuze is -45° F to +145° F (-43° C to +63° C).

## 5-11.7 Verification of Fuze Settings on M782, M762A1 and M767A1 through INTERROGATION.

Place a PIAFS over fuze to be interrogated and select INTRG in SETFUZE menu.

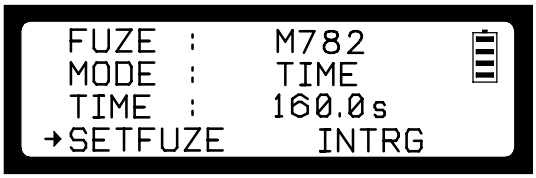


06pc224t

A menu will display showing which fuzes can be interrogated, SETFUZE and INTRG. Press ENTER button to interrogate.

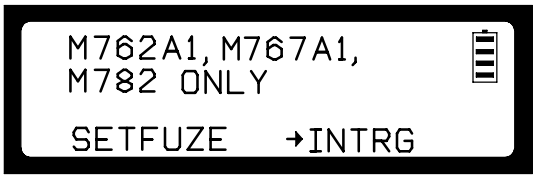


06pc225t

A wait window will display.

06pc226t

This window shows that an M782 fuze was set in the TIME mode for 160.0 seconds.

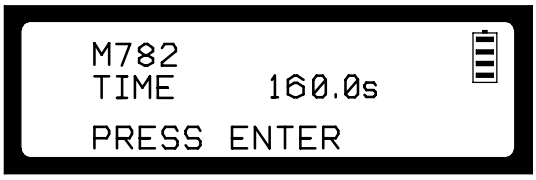


06pc227t

If a fuze other than the M782, M762A1 or M767A1 were Interogated the FUZE window will display FAILED RESET THE FUZE.

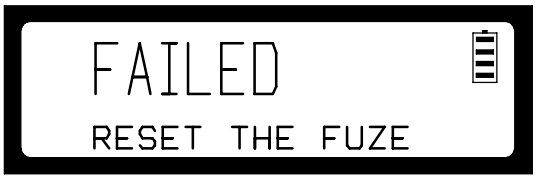


06pc228t

## 5-12 PROPELLING CHARGE PREPARATION.

### 5-12.1 Propelling Charges, M3A1 and M4A2.

**WARNING**

Under no circumstances will green bag and white bag charges be assembled together for firing. Critical malfunction could result.

**NOTE**

Use of the M2 flash reducer to reduce muzzle flash is optional, except when TB 9-1300-385-1 or TB 9-1300-385-2 restricts a specific propelling charge lot to use only with flash reducer. The M4A2 propelling charge has a flash reducer assembled in front of the base charge (increment number 3) at the time of manufacture and does not require use of the M2 flash reducer.

M4A2 white bag charges can be expected to perform within design limits at charges 5 thru 7. However, large dispersions may result when these charges are fired at charges 3 and 4. It is recommended that M3A1 green bag charges be used instead of white bag charges at charge 3 and 4. If green bag charges are not available, white bag charges may be used, although range dispersions may result.

If required, remove excess increments from charge and retighten excess straps by twisting and securing ends under straps.

### 5-12.2 Propelling Charge, M119A1.

The M119A1 is a one-increment, charge 8 white bag propelling charge and is shipped ready for firing. After unpacking and inspecting, the only preparation required is removal of the igniter protector cap and the pull strap.

### 5-12.3 Propelling Charge, M119A2.

The M119A2 is a one-increment charge 7 red bag propellant charge and is shipped ready for firing. This charge is not used in lieu of charge 7, M4 series white bag. It has almost the same muzzle velocity as the M119A1 white bag charge 8. After packing and inspection, the only preparation required is removal of the igniter protector cap and its separate tie strap.

### 5-12.4 Propelling Charge, M203 and M203A1.

The M203/M203A1 is a one-increment charge 8 propelling charge. After unpacking and inspection, the only preparation required is removal of the igniter protector cap.

### 5-12.5 Propelling Charge, M231 or M232/M232A1 (MACS).

The M231 MACS is packed with four increments (two per extraction sleeve) in each metal container. The M232/M232A1 is packed with five increments per extraction sleeve in each metal container. There is no other preparation needed after unpacking and inspecting the MACS.

## 5-13 LOADING AND FIRING.

The chief of section must ensure that the following duties and actions are accomplished by his crew on each and every round loaded and fired from his cannon tube.

**WARNING**

- Observe all precautions in AR 385-63, FM 6-40 and FM 6-50, particularly limitations regarding overhead fire in training and combat.
- Do not load or fire artillery ammunition without the authorized fuze. Firing of such rounds without fuzes or with an unauthorized fuze could result in inbore prematures and other hazardous conditions.
- Do not load or fire round if the fuze is not fully seated.
- Firing the M557, M572 and M564 fuzes during heavy precipitation (heavy rainfall, sleet, snow, or hail) may result in occasional downrange premature detonation (or function). The amount of precipitation necessary to cause malfunctioning is comparable to the heavy downpour that occurs during a summer thunderstorm.
- Do not fire M110 series WP projectiles which are known to have been stored in other than the base down position. Firing of such projectiles could contribute to inbore malfunctions or close-in premature malfunctions.
- Do not fire proximity-fuzed ammunition at targets closer than 750 meters to friendly troops.
- Do not fire the M483A1, M692, M731, M718, M741, M825, M741A1, M718A1, M687, M825A1, M864, projectiles below charge 3. Firing below charge 3 may result in stickers.
- If a projectile fired with a Mk 399 MOD 1 fuze hits a substantial object a high order explosion can occur. If the object is within the 400 caliber minimum arming distance, it can cause damage to the weapon and death or serious injury to unprotected crewmembers.
- Mk399 MOD 1 fuzes set in the delay mode perform more effectively if the angle of attack (the angle between the round and the perpendicular of the target) is less than 45 degrees. Angles of attack higher than 45 degrees will result in decreased effectiveness and increase the likelihood of unexploded ordinance in the battlefield.

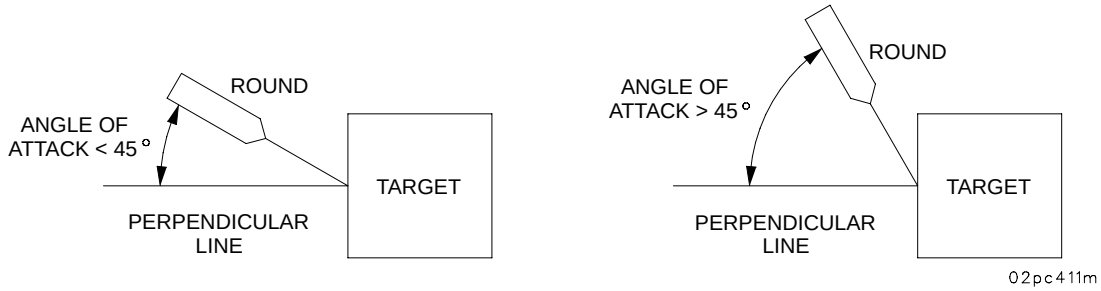

## 5-13 LOADING AND FIRING - CONTINUED

**WARNING**

- Do not fire the M549/M549A1 projectiles if obturating band is missing or broken. Separation of the projectile and rocket motor may occur. If the band is displaced and can be repositioned and remain in the groove, the projectile can be fired.
- Do not assemble M3A1 green bag charges with M4A2 white bag charges. Critical malfunction could result.
- Do not load or fire M231 charges with M232/M232A1 charges. Critical malfunction could result. Do not load or fire more than two increments of M231 charges or less than three increments of M232/M232A1 charges.
- Firing a round with an obstruction in the cannon tube can cause inbore premature detonation.
- Do not fire the M864/M825/M825A1/M795 if the obturator band is missing or broken as rotating band failure and short rounds may result. If the band is displaced and can be repositioned and remain in the groove, the projectile can be fired.
- Do not fire an M864 projectile if the outer weather seal is damaged (torn, punctured, or peeling) to the extent that moisture can enter the base burner assembly. A loss in range (short round) may result. Return projectile to ammunition supply point (ASP).
- For M864 projectiles marked with three solid white circles 120 degrees apart located on the ogive (above the weight zone markings), observe the following warnings:
    - Do not fire the M864 if it has been dropped or if it shows evidence of denting, flattening, or gouging to the lifting plug, grommet, rotating band, or boatail area.
    - If, during handling and/or loading, the M864 base separates, call EOD personnel.
    - Do not fire the M864 if it has been delivered without the grommet.

## 5-13 LOADING AND FIRING - CONTINUED

**WARNING**

During fire mission, all unused propelling charges not needed to fire a particular round will be kept in their packing containers with lids on.

a. Make sure round is clean and fuze is present and fully seated.

b. Make sure there are no obstructions in the cannon tube.

c. Check cannon firing mechanism to see that primer expended in previous firing has been removed.

d. Remove grommet or flexible rotating band cover (M795 projectile) from projectile.

**WARNING**

- Never load a propelling charge into the chamber by increments. Only the fully assembled charges will be used. Critical malfunction could result.
- Dirt or grease left on the projectile rotating band could cause failure of the projectile to seat properly in the forcing cone on ramming. Firing an unseated projectile could cause inbore explosion resulting in injury or death to personnel.

**NOTE**

If firing the M549/M549A1 projectile, remove the rocket motor-off cap from the base of the projectile by turning in the direction of the arrow (clockwise). This projectile is authorized for rocket-on firings only.

e. Load fuzed projectile into cannon and ram it solidly through the firing chamber into the forcing cone so it will not fall back on the propelling charge. Round must remain wedged into the forcing cone at all angles of elevation.

## 5-13 LOADING AND FIRING - CONTINUED

f. Remove the igniter protective cap from propelling charge and load propelling charge into cannon chamber with igniter end (red bag) toward the breechblock assembly.

**WARNING**

Never close the breechblock assembly unless you can see the red igniter pad on the base of the propelling charge. Misfires, hangfires, erratic performance, or other critical malfunctions could result.

g. Close and lock the breechblock assembly.

**WARNING**

Never insert primer in primer cavity unless breechblock assembly is closed and locked. Ignition of the propelling charge with breechblock assembly not fully closed presents a critical hazard to the crew.

h. Insert primer and move firing mechanism block assembly to firing position and fire on command of the chief of section.

## 5-14 AFTER FIRING.

a. Make sure breechblock assembly is in the fully open position.

b. Wipe face of obturator spindle assembly after each round and swab the powder chamber, making sure that all burning fragments of powder charge are removed from powder chamber. Look through the cannon tube. If the cannon tube is clear, announce “BORE CLEAR”.

c. All ammunition fired must be recorded by charge number, type, and total number of each fired, and entered on DA Form 2408-4.

## 5-15 AMMUNITION PREPARED FOR FIRING BUT NOT FIRED.

**WARNING**

The projectiles and fuzes that have been rammed and then removed from the tube will not be reloaded or fired, with the exception of M712 Copperhead extracted from a cold tube. Put these aside for turn-in. See para 5-26.

a. Using applicable fuze setter and procedure (para 5-11), reset the fuzes of the projectiles prepared for firing but not rammed. Reset time fuzes to safe; reset VT fuzes to initial setting at which they were shipped; reset superquick and delay fuzes to SQ. Replace safety wires on those fuzes so furnished. M762/M767 ET fuzes that have been activated and not fired should be reset to ◀ 88.8, and segregated, and used first in subsequent firings. When the battery runs down on an activated M762/M767 fuze, the LCD goes blank. These fuzes are unserviceable, and should be packed separately, marked unserviceable, and turned in to the ammunition supply point (ASP). To determine if an M762/M767 fuzes has been activated and run down, gently attempt to turn the ogive clockwise by hand without depressing the selector button. If the ogive turns easily, the fuze has been activated; a fuze that has not been activated should resist the applied torque. Replace safety wires on those fuzes furnished with them.

**NOTE**

Be sure the correct type of lifting plug is used (e.g., energy-absorbing or shock attenuating lifting plugs for M549 series projectiles, yellow fusible lifting plugs for M483A1 projectiles, and standard eyebolt lifting plugs for other projectiles).

b. Disassemble fuze from projectile and repack in original packing. When a long intrusion proximity fuze is removed from projectile, replace supplementary charge in projectile before assembling spacer and the correct type of lifting plug.

c. Replace grommet or flexible rotating band cover (M795 projectile) over rotating band.

d. Restore propelling charges to original condition. Make sure all zones (increments) are present, tied, in proper order, in good condition, of the proper lot number, and that igniter caps are replaced.

e. Replace fuzes, primers, and flash reducers in original packing.

f. Make sure the lot number of the ammunition corresponds with the lot number of the container.

## 5-15 AMMUNITION PREPARED FOR FIRING BUT NOT FIRED - CONTINUED

g. If rocket cap was removed from the M549/M549A1 HERA projectile, replace cap and tighten handtight.

h. Return all projectiles to shaded and protected storage, regardless of weather.

i. Special instructions for the M712 copperhead projectile are found in para 5-25.

j. Special instructions for the M483A1 and M864 ICM projectiles are as follows:

**WARNING**

Use no other lifting plug except the fusible or universal plug removed from this projectile, because it is designed for safe release of pressure inside the projectile in case of a fire during storage or shipping actions.

(1) Wind the pull-wire (1) under four tabs (2) on the cover of the expulsion charge assembly (3) (1-1/2 turns for proper engagement).

(2) Place bagged expulsion charge assembly (3) or cylindrical plastic expulsion charge assembly (para 5-9.4) into projectile fuze well (4).

(3) Reinstall fusible or universal lifting plug and gasket (5).

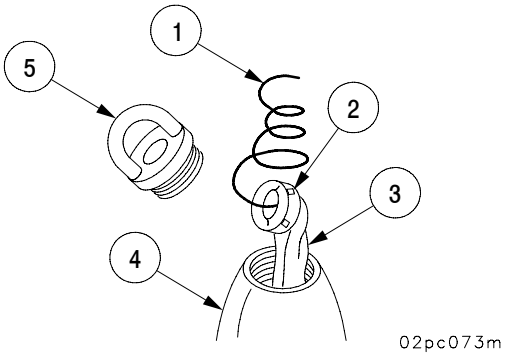

## Section III. MAINTENANCE

### 5-16 HANDLING.

**WARNING**

- Keep fire and flammable materials out of the ammunition areas. There will be no smoking in the vicinity of ammunition.
- Shield all ammunition from high temperatures (e.g., direct rays of the sun). When outside temperature is expected to reach +100°F (+38°C), failure to shade could result in damage to material and the loss of life.

a. Do not expose ammunition and components containing explosives to extreme temperatures. Do not expose to direct sunlight, flame, or other sources of heat.

b. Do not expose unpacked propelling charges and fuzes to rain, excessive humidity, or ground moisture.

b.1 Protect the rotating band and the obturator band by keeping the grommet or flexible rotating band cover (M795 projectile) on the projectile while it is being handled and transported.

c. Prevent rough handling of projectiles and fuzes. Do not strike projectiles together and do not offload ammunition by dropping projectile on top of projectile.

d. Protect fuzes, primers, and flash reducers at all times from foreign matter and impact. A drop of 4 feet (1.20 m) may cause the electrolyte vial in a VT fuze battery to break, thus causing a dud.

e. Do not disassemble fuzes.

### 5-17 CARE.

a. Ammunition is packed to withstand conditions ordinarily encountered in the field. Keep packing boxes from becoming broken or damaged.

b. Since ammunition is impaired by moisture, frost, extreme temperatures, and foreign matter (mud, oil, etc.), observe the following:

(1) Do not break the moisture-resistant seal on the container until ammunition is to be used.

(2) Shield all ammunition from high temperatures (e.g., the direct rays of the sun). When covering projectiles to provide this shield, cover with tarpaulin keeping 18 in. (45.7 cm) air space over and 6 in. (15.2 cm) of air space on sides. This will ensure free air flow necessary to keep the projectiles cooler in hot weather.

(3) Refer to para 5-29 for information regarding maintenance of the M712 Copperhead (HEAT) projectile.

## 5-18 MAINTENANCE.

### 5-18.1 General.

**WARNING**

Alteration of loaded ammunition or components is prohibited. Unauthorized modification of ammunition could cause critical malfunction.

**NOTE**

Proper performance of ammunition maintenance procedures when ammunition is received by using units assures that ammunition on hand is kept ready for use.

a. Inspect ammunition packaging daily. Open boxes or containers that show evidence of contamination or deterioration, and inspect ammunition. DO NOT OPEN SEALED BOXES OR CONTAINERS UNLESS DEFECTIVE AMMUNITION IS SUSPECTED.

b. Duties of cannoneers in preparing M712 (Copperhead) for firing are found in section IV of this chapter, as well as care, maintenance, inspection, unpackaging, and repackaging of this projectile.

c. Inspect unpackaged ammunition and explosive components daily.

d. Wipe off wet or dirty ammunition at once. Remove light corrosion. Do not polish ammunition to make it look better.

e. Consider ammunition unserviceable if it has severe rust or propellant contamination, particularly moisture. Do not use except in emergency.

f. When repackaging ammunition, put it back in original container. If other packing material must be used, the old marking should be transferred to the new containers.

g. Refer to para 5-19.4 for the LPRS, an optional system for securing loose, unfuzed projectiles for transportation.

### 5-18.2 Projectiles.

a. Visually inspect projectiles for the following defects:

(1) Distorted, out of round, or damaged body.

(1.1) Protect the rotating band and the obturator band by keeping the grommet or flexible rotating band cover (M795 projectile) on the projectile while it is being handled and transported.

(2) Dirt or other foreign material.

(3) Seepage of explosive filler.

(4) Rust through projectile baseplate.

b. Clean dirt or foreign material from projectile by wiping with a damp wiping rag (item 34, Appx D).

c. Return defective projectiles to ASP.

## 5-18 MAINTENANCE - CONTINUED

### 5-18.2 Projectiles - Continued

d. Inspect the M549/M549A1 projectile for the following:

(1) Missing or broken obturating bands. The projectile cannot be used if the obturating band is broken or missing. Return projectile to ASP.

(2) Broken energy-absorbing or shock attenuating lifting plugs. When the lifting plug is broken, the threaded area will remain in the projectile. Do not attempt to extract any portion of the broken plug. Return projectile to ASP.

e. The M483A1 projectile can be used if the obturating band is missing or broken. Remove and discard broken obturating bands.

f. Inspect the M864 projectile for the following:

(1) Missing or broken obturating bands. The projectile cannot be used if the obturating band is broken or missing. Return projectile to the supply point.

(2) Damaged (torn, punctured, or peeling) weather seal. The projectile cannot be used if the weather seal is damaged. Return projectile to the supply point.

g. Inspect specially marked M864 projectiles (three solid white circles located on the ogive) for the following:

(1) Projectiles that have not been palletized. Projectiles that have been transported as loose cargo. These conditions can cause gaps or separation at the base to body joint resulting in a hazard. Return the projectile to the supply point.

(2) Projectiles showing denting, flattening, or gouging to the lifting plug, grommet, rotating band, or boatail area. These conditions can cause gaps or separation at the base to body joint resulting in a hazard. Return the projectile to the supply point.

h. Inspect the M825/M825A1 projectiles for missing or broken obturators. The projectile cannot be used if the obturator is broken or missing. Return projectile to ASP.

### 5-18.3 Propelling Charges M3A1 and M4A2.

a. Visually inspect propelling charges M3A1 and M4A2 for the following defects:

(1) Loose tie straps, allowing separation of the charge into increments.

(2) Missing increment, extra increment, or incorrect sequencing (order) of increments.

(3) Increment bags torn or damaged to the extent that black powder or propellant spills out.

(4) Wet propelling charge.

(5) Missing or damaged red igniter pad on base of charge.

b. Charges requiring retying may be retied as follows:

(1) Assemble increments in correct order.

(2) Tie the four tie straps over top of charge.

c. Return all defective charges to ASP.

## 5-18 MAINTENANCE - CONTINUED

### 5-18.4 Propelling Charges M119, M119A1, M119A2, M203, M203A1, M231 and M232/M232A1.

a. Visually inspect propelling charges M119, M119A1, M119A2, M203, M203A1, M231, and M232/M232A1 for the following defects:

**NOTE**

Flash reducer is sewn into sides of charge bag on M119A2 charge.

(1) Missing flash reducer.

(2) Charge bag ripped or damaged or combustible cases broken to the extent that propellant can escape.

(3) Black powder leaking from base igniter pad.

(4) Base igniter pad not centered with respect to outer diameter of charge, both ends for the M231 and M232/M232A1 charges.

(5) Evidence of broken or damaged central igniter tube or case core tube (M119, M119A1, M203, M231, and M232/M232A1 only).

(6) Combustible case for M231 and M232/M232A1 charges with cut or puncture through case well.

(7) Combustible case for M231 and M232/M232A1 charges with uneven cap (crooked, tilted, or slanted).

(8) Combustible case for M231 and M232/M232A1 charges that cannot be replaced into its extraction sleeve due to exterior damage.

(9) Tie straps not tight over forward end of charge.

(10) Lacing jacket not secure on charge (M119A1 and M203 only).

(11) Cord missing or broken on lacing jacket (M119A1 and M203 only).

(12) M203/M203A1 charges with crushed or distorted cases or with missing or broken propellant. These are not to be fired.

b. If tie straps are loose, retighten the straps at the forward end of the charge.

c. Return all defective charges to ASP.

### 5-18.5 Fuzes.

a. Inspect fuzes for the following defects:

(1) Damage to body or threads.

(2) Loose components.

b. Return defective fuzes to ASP.

### 5-18.6 Ammunition or Components of Ammunition Prepared for Firing, but not Rammed.

a. Return such ammunition to the original condition and packing. Mark appropriately, and use first in subsequent firings to keep stocks of open packings to a minimum.

b. Reassemble the supplementary charge and the correct type of lifting plug (with gasket and spacer) to the projectile to restore to its original condition. Return fuzes to original condition. Return fuzes to original packing. In reassembling the components, make certain the supplementary charge is properly inserted (felt pad end innermost).

c. Remove the projectile spotting charge from the M577 series fuze or M62 fuze and replace the expulsion charge assembly and fusible or universal lifting plug with gasket to the M483A1 or M864 projectiles. Replace rocket cap on M549 and M549A1 projectiles.

## 5-18 MAINTENANCE - CONTINUED

### 5-18.6 Ammunition or Components of Ammunition Prepared for Firing, but not Rammed - Continued

d. Reassemble propelling charges prepared for firing but not used. Replace in original containers as follows:

(1) If increment was removed, reinstall and retie.

(2) Replace igniter protective cap.

(3) Replace charge in container (igniter end first). Close and secure container.

(4) Mark container appropriately and use charge first in subsequent firings.

### 5-18.7 Unserviceable Ammunition.

a. Conspicuously mark unserviceable ammunition or explosive components UNSERVICEABLE, and return to ammunition supply personnel for disposition.

b. Repackage ammunition components in original containers. If original container is unsuitable, use available package material and transfer all markings. All layers of packing must be conspicuously marked UNSERVICEABLE.

### 5-18.8 Excess Explosive Components.

**WARNING**

Put excess powder increments back in powder cans and properly close and lock lid. Severe burns to personnel may result from accidental ignition of excess powder increments.

a. Pack supplementary charges removed from projectiles prior to assembling long intrusion proximity fuzes in containers from which these proximity fuzes were removed.

b. Properly mark containers and return to ASP for disposition.

c. Destroy any unused powder increments or expelling charges left over after round has been fired by performing the following steps:

**NOTE**

Notify Range Control prior to burning powder.

(1) Locate proper burning area. Area should be164 ft (50 m) from any combustible material.

(2) Ensure proper firefighting equipment and personnel are present.

(3) Lay out powder increments parallel to wind direction in 12 in. (30.48 cm) wide column.

(4) Lay out an igniter trail at the downwind end of the line of increments by opening one powder bag and making a trail of powder at 90 degrees to the powder increments. The igniter trail should be approximately 16.40 ft (5 m) long and 2 in. (5.08 cm) wide. See diagram.

# 5-18 MAINTENANCE - CONTINUED

## 5-18.8 Excess Explosive Components - Continued

(5) Light the end of the igniter trail, then move away from the powder increments.

(6) During high winds over 25 knots, no more than 10 powder increments can be burned at a time.

(7) While powder is burning, be alert for sparks or burning fragments caught by the wind.

(8) When powder is through burning, be sure all flames are extinguished and no smouldering ashes remain. BE SURE ASHES ARE COMPLETELY BURNED.

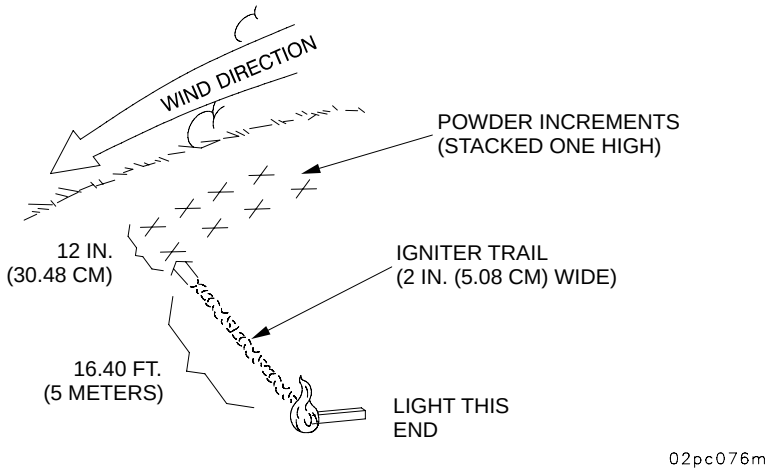


## 5-18.9 Destroying MACS Charge Increments.

a. Locate proper burning area. Area should be 164 feet (50 meters) from any combustible material.

b. Ensure proper firefighting equipment and personnel are present.

c. Prepare MACS propelling charge increments for field destruction:

(1) Peel off both red end seals, exposing end igniter bags.

(2) Remove end igniter bags from charge increment (locate ribbon tying bags together and cut, taking care not to cut into bags).

(3) Use one charge increment to make igniter trail. If one increment is cracked, break it open and use propellant to make igniter trail.

(4) If no charge increments are cracked, roll one charge increment on the ground exerting a downward pressure on the joint of the case base and case body to break the joint. The exposed propellant can be poured out and used to make the igniter trail.

d. Lay out MACS propelling charge increments parallel to wind direction in 12 inch (30.48 centimeter) wide column (columns of two increments) and lay the removed end igniter bag and combustible case components among the increments.

e. Lay out an igniter trail at the downwind end of the line of increments by either breaking open one increment or by using a cracked or broken increment and making a trail of propellent at 90 degrees to the increments. The igniter trail should be approximately 16.40 feet (5 meters) long and 2 inches (5.08 centimeters) wide. See diagram.

f. Light the end of the igniter trail, then move away from the MACS propelling charge increments.

g. While increments are burning, be alert for sparks or burning fragments caught by the wind.

h. When increments are through burning, be sure all flames are extinguished and no smoldering ashes remain. BE SURE ASHES ARE COMPLETELY BURNED.

## 5-19 STORAGE.

**WARNING**

Ammunition exposed directly to sunlight, or in unventilated containers, enclosures, shelters, freight cars, closed vehicles, and similar structures exposed to direct sunlight may reach temperatures exceeding upper storage limits. Avoid exposure of ammunition components to direct sunlight. Do not store ammunition assembled with tetrytol-loaded bursters (i.e., projectiles, 155mm: smoke, WP, M110; gas H, and HD, persistent M110) at temperatures exceeding +125°F (+52°C).

### 5-19.1 Temperature Limits.

a. Except as otherwise specified, observe the following limits:

(1) Lower limit is -80°F (-62°C) for a period of not more than 3 days.

(2) Upper limit is +160°F (+71°C) for a period of not more than 4 hours per day.

### 5-19.1 Temperature Limits - Continued

b. Store or transport M110 projectiles containing WP at a temperature below the melting point (+111.4°F (+44°C)) of the WP filler. If this is not practicable, store or transport such projectiles on their bases so that, should the WP filler melt, it will resolidify with the void in the nose of the projectile. This restriction does not apply to the M825/M825A1 WP projectile.

c. Protect proximity fuzes and proximity rounds from long exposure to high humidity. Store M728 and M732 fuzes in temperatures between -65°F to +145°F (-54°C to +63°C) and 0°F to 120°F (-18°C to +49°C) for the M514 series.

### 5-19.2 Sites.

**WARNING**

Do not store ammunition under trees or near tall buildings that attract lightning. When ammunition must be stored in the open, select a storage site free of power lines, electric cables, and flammable materials. Sites should not be adjacent to reservoirs, water mains, etc. Do not store ammunition near a large concentration of personnel.

Store ammunition in the firing area so that it is protected against accidental explosions. Sites should be level and well drained.

## 5-19 STORAGE - CONTINUED

### 5-19.3 Provisions.

a. Use heavy, well-supported dunnage to keep bottom tier of stacks off the ground and to prevent it from sinking into the ground.

**NOTE**

A hardstand of blacktop or gravel and sand is preferable to excessive use of dunnage.

b. Allow at least 6 inches (15.24 cm) of space beneath the pile for air circulation. Dig trenches to prevent water from flowing under pile.

c. Provide nonflammable covers (e.g., tarpaulin) for all ammunition. Maintain air space of approximately 18 inches (45.72 cm) between cover and ammunition. Keep cover at least 6 inches (15.24 cm) from pile on ends and sides to permit circulation of air.

d. Store WP M110 projectile nose up. This restriction does not apply to the new M825/M825A1 WP projectile.

e. Store ammunition and primer containers with top side up. Labels or marking on boxes and containers indicate which side should be up.

#### 5-19.3.1 Flexible Rotating Band Cover (FRBC)

a. General. The FRBC, as well as the grommet, is used to protect the rotating band of artillery projectiles from corrosion, dirt, and damage during transportation, handling, and storage. The FRBC can be discarded or replaced in the event of NBC contamination. The FRBC consists of a cloth band with hook and loop attachable ends. Once the FRBC is wrapped around the projectile rotating band, it has to be pulled on the two ends until is tight against the rotating band. The FRBC is then closed by pressing the loop end against the hook end of the fastener and the word “REMOVABLE BEFORE FIRING” visible in the upright position.

b. Replacement. The FRBC should be replaced if any of the following occurs:

(1) The FRBC doesn’t stay firmly on with sufficient resistance to opening.

(2) The FRBC exhibits cuts that expose the rotating band.

(3) The FRBC marking is unreadable due to age and wear.

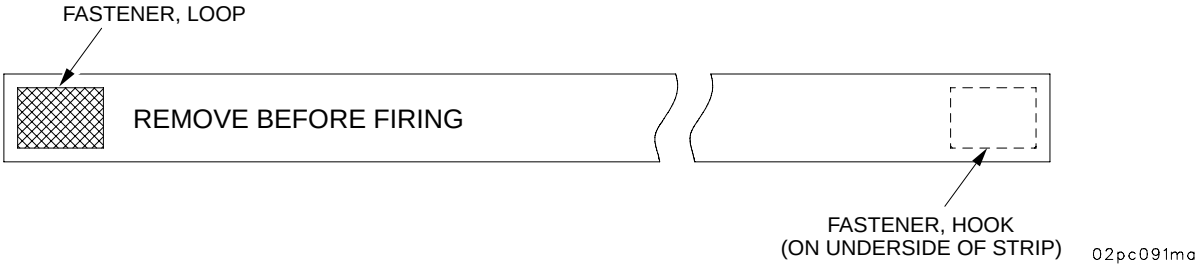


#### 5-19.3.2 Field Artillery Projectile Pallet (FAPP)

a. General. The FAPP is a NBC decontaminable, non-flammable, reusable metal pallet. It allows for easy repalletization in the field with no special tools required. The FAPP consists of a steel pallet base, steel pallet cover and two adjustable rods that hold the cover to the base. The two adjustable rods hold securely the FAPP without any banding needed. There are plastic spacers under the base of the projectile and on top of the lifting plug to prevent abrasion. The FAPP holds up to eight 155MM projectiles with a minimum of two projectiles and it accommodates both the plastic grommet and the flexible rotating band cover (FRBC) for rotating band protection. Before loading the FAPP with projectiles, the latch rods must be assembled to the pallet base. The center of the pallet is loaded first to avoid tipping over. Once the FAPP is loaded, the pallet cover with the handles in open position is placed over the projectiles. The pallet cover is then closed by pushing handles down into the lock position.

# 5-19 STORAGE - CONTINUED

## 5-19.3.2 Field Artillery Projectile Pallet (FAPP) - Continued

b. Instructions. Complete instructions for assembling loading, and unloading the FAPP are found in TM 9-1300-251-20&P, UNIT MAINTENANCE, ARTILLERY AMMUNITION FOR GUNS, HOWITZERS, MORTARS, RECOILLESS RIFLES, AND 40-MM GRENADE LAUNCHERS, and TM 9-1300-251-34&P, DIRECT SUPPORT AND GENERAL SUPPORT MAINTENANCE MANUAL, ARTILLERY AMMUNITION FOR GUNS, HOWITZERS, MORTARS, RECOILLESS RIFLES AND 40MM GRENADE LAUNCHERS.

| PROJECTILE | ROD LENGTH | BASE SPACERS |
|---|---|---|
| M107, M110 SERIES, M448 SERIES, M485A1, M804 SERIES | 24.5 INCH | 5.5 INCH WIDE - GREEN |
| M795 | 30 INCH | 5.9 INCH WIDE - BLACK |
| M549 SERIES | 31.5 INCH | 5.5 INCH WIDE - GREEN |
| M483A1, M692, M718, M731, M741, M864, M898 | 32 INCH | 5.9 INCH WIDE - BLACK |

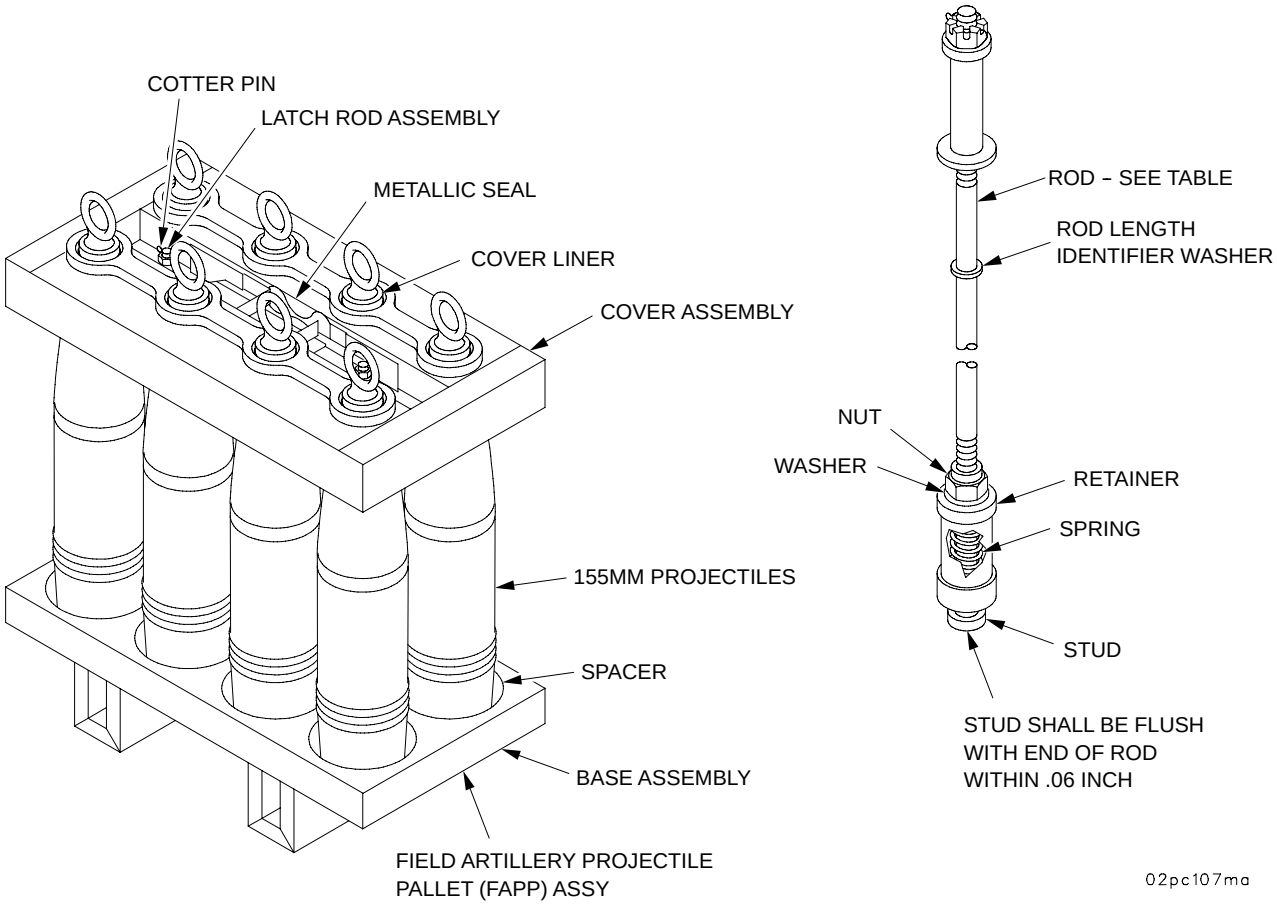

## 5-19 STORAGE - CONTINUED

### 5-19.4 Loose Projectile Restraint System (LPRS).

5-19.4.1 General. The LPRS is a divider rack that provides a fast, simple method of securing “loose” unfuzed projectiles for transportation with field artillery companion vehicles. The rack restrains projectiles from excessive movement and from contact with other projectiles. The rack is easily assembled, using a quantity of short and/or long plastic dividers that fit together. Projectiles are placed vertically in the rack, with the base of each projectile resting on the floor of the vehicle. The assembly is then secured to the sidewall of the vehicle by means of cargo tiedown straps. After use, the rack may be disassembled and stored for reuse.

5-19.4.2 Use of LPRS. Use of the LPRS is optional, and the components are listed in Appendix D, Expendable Supplies and Materials List.

5-19.4.3 Instructions. Complete instructions for use of the LPRS are found in TM 9-2590-210-10, Loose Projectile Restraint System (LPRS) for Use with Field Artillery Companion Vehicles.

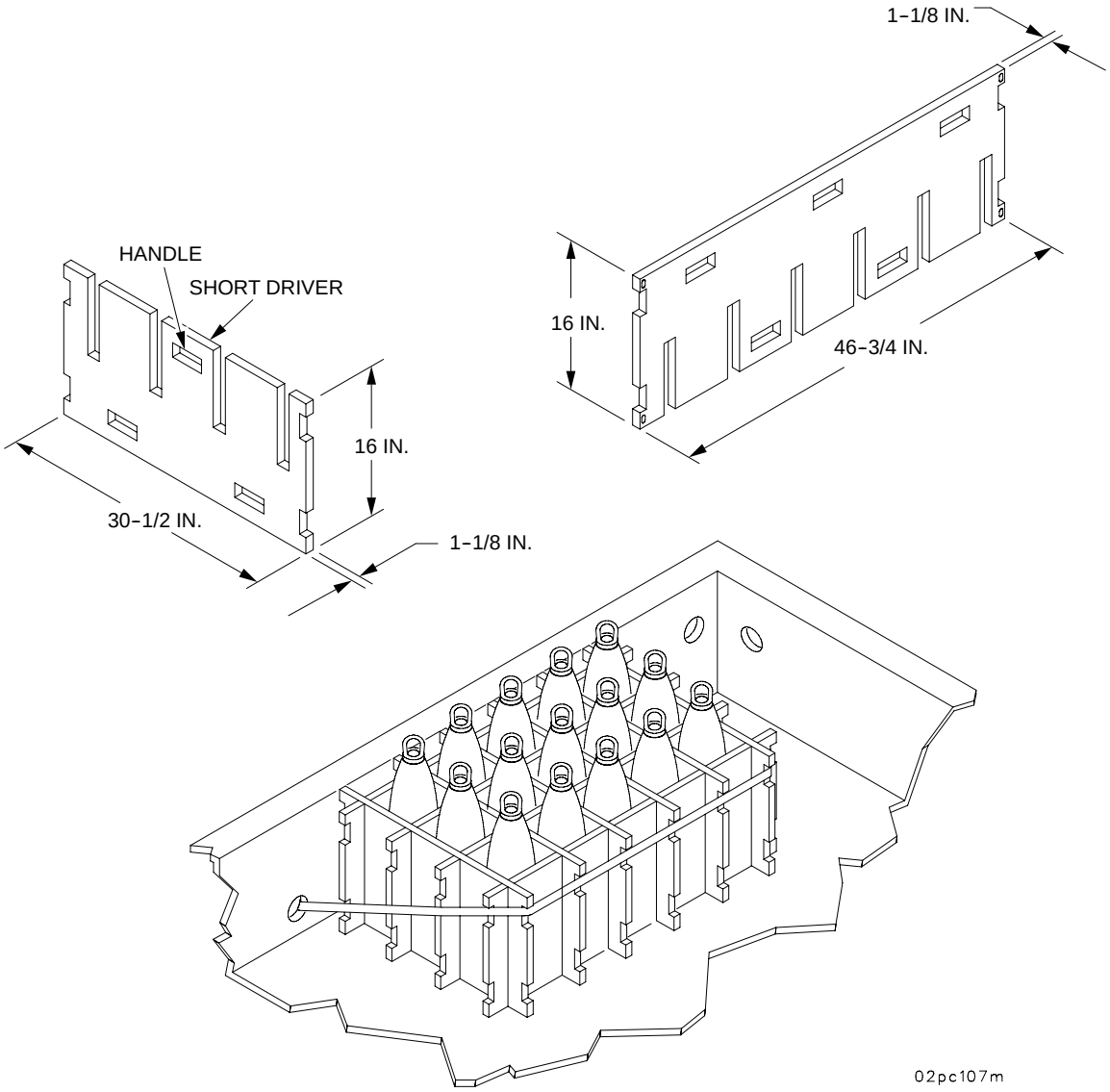

# Section IV. CANNON-LAUNCHED GUIDED M712 PROJECTILE, HEAT (COPPERHEAD) AND M823 PROJECTILE (TRAINING)

## 5-20 DESCRIPTION.

Cannon-launched, guided M712 projectile is a terminally guided system launched from the M109A6 howitzer into a ballistic trajectory. During flight, the target is illuminated by a laser beam from a laser designator. An onboard computer continuously refines the terminal trajectory and provides guidance to the control surfaces, causing the round to home in on stationary or moving hard-point targets. The M712 projectile is fired in the same manner as conventional projectiles.

**WARNING**

The M823 training projectile must not be fired. Such firing could be a hazard to personnel forward of the weapon.

The training round for the M712 projectile is the M823 projectile. The M823 training projectile is designed to train 155MM howitzer weapon crews in the handling and setting of the M712 projectile. It simulates the M712 in weight, center of gravity, and external appearance. It contains code and time switches which are set to simulate prefiring activity by the crew; however, it does not have the wings or fins. It is shipped and stored in the same type of container as the M712 and is color coded bronze for easy identification. The containers for both the M712 and M823 projectiles are forest green. Marking for the M712 is yellow; the M823 is white. Bronze patches at container ends also identify the M823 projectile inside.

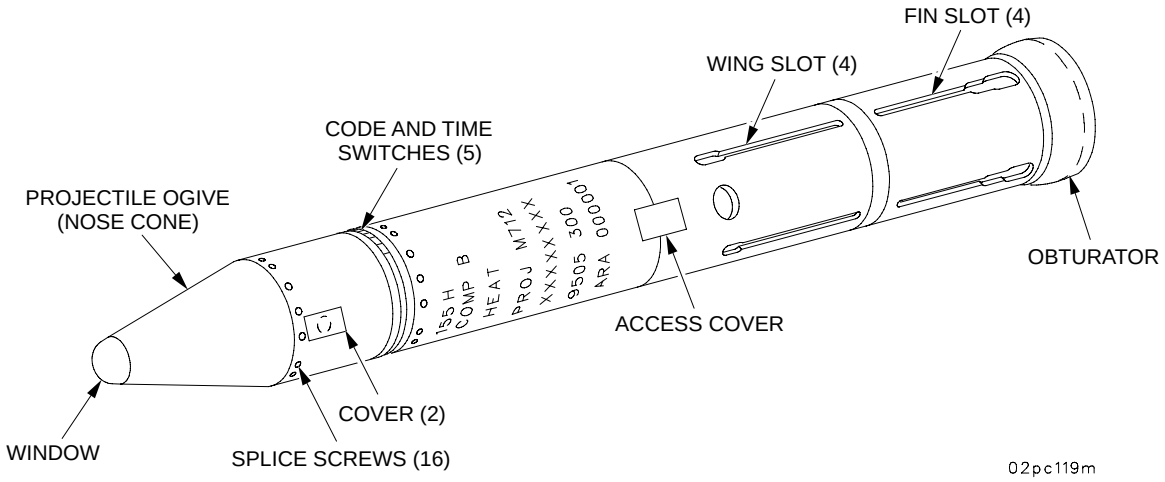

## 5-21 UNPACKAGING AND INSPECTION.

**WARNING**

If exuded composition B is observed on the projectile or in the container during the unpackaging and inspection operations, move the projectile to a safe area and notify EOD for disposal.

**NOTE**

Unless the unpackaged projectile is to be fired immediately, it must be protected from the elements (by means of protective bag). Do not let an unpackaged M712 projectile sit out unprotected.

### 5-21.1 Unpackaging.

A humidity indicator is located in aft end of the container. This indicator is the pie-sector type. The M823 training round has an indicator card that resembles the card for the M712, but says “DUMMY CARD” on its face. These procedures apply only to the M712 projectile.

**CAUTION**

Before removing the round from container, make a quick visual inspection of the projectile for obvious damage or other condition that would prevent use. If projectile appears not usable, replace lid and return to battalion maintenance.

Open only those containers whose humidity indicator card shows under 40 percent relative humidity (40 percent spot must be colored blue, 30 percent spot may be blue or pink), and only when a fire mission is planned or anticipated. If the 40 percent humidity spot is pink, turn complete item in to battalion ammunition section. Keep all packaging materials in the container. A protective bag is provided inside each container. When mission requirements dictate a need, the M712 projectile may be removed from the shipping and storage container and placed in the protective bag. The protective bag will protect the round against direct effects of water, sunlight, dirt, and debris. However, it will not protect the round from the elements for more than 30 days at a time. Repackage unfired projectiles within 30 days and turn in to battalion ammunition section. The howitzer may be driven with two M712 projectiles in protective bags stowed in the crew compartment on the right side sponson (para 5-27). All other M712s to be moved must be repackaged in their containers and transported in ammunition carrier vehicles. Unpackage the M712 projectile from its container as follows:

## 5-21 UNPACKAGING AND INSPECTION - CONTINUED

### 5-21.1 Unpackaging - Continued

a. Break metallic seal wire (if still present) located on center latch assembly, using screwdriver or equivalent tool. (One wire on center latch assembly of each side of the container).

b. Depress manual relief valve (1).

c. Release all ten latches (2). Start at one end and open corresponding left and right side latches. Pull latch all the way up to release T-bolts (3). Then push latch with T-bolts all the way down.

d. Separate cover (4) from container body and place upside down on ground, alongside the body.

e. Partially pull torquing rod (5) from rear end of tension mechanism.

f. Use rod to release the tension by turning counterclockwise, then spin tension mechanism by hand until it stops.

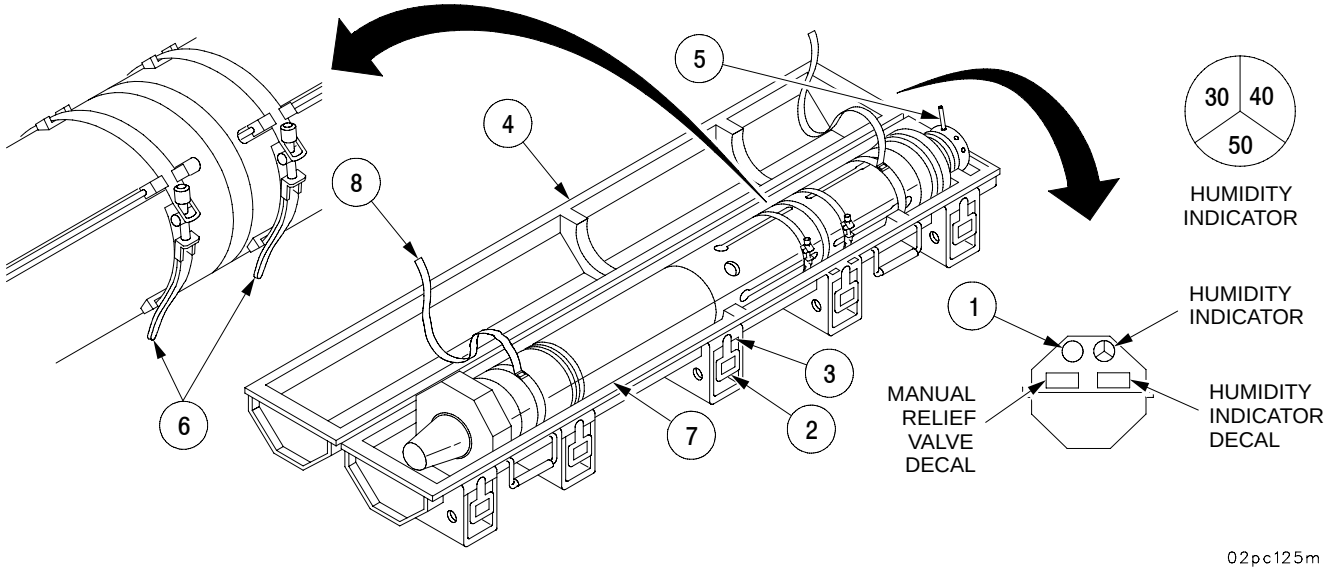


**CAUTION**

Do not let the projectile touch the ground or lay in water. Water, dirt, or other materials entering projectile through wing/fin slots may cause projectile to fail during flight. Do not touch or grasp ogive when handling and loading projectile.

g. Open stainless steel fin and wing preload bands (6). (Omit this step if projectile (7) is to be stored inside the howitzer). Remove and place in container cover.

h. Carefully remove projectile (7) from container by lifting it up and to the rear using lifting straps (8) provided on the projectile.

i. Place the projectile on a clean surface free of dirt or water. Projectile may be placed on a tarpaulin or may be put down across the top of the open container. The projectile should be shielded from direct sunlight, rain, dirt, and other debris.

j. Remove lifting straps (8) and place them in the container.

## 5-21 UNPACKAGING AND INSPECTION - CONTINUED

### 5-21.1 Unpackaging - Continued

k. Spin tension mechanism several turns clockwise by hand to avoid interference of torquing rod with cover when container is closed.

l. Replace cover on container body.

m. Starting on the end opposite the humidity indicator, straddle container, place T-bolts in cover recesses and close corresponding left and right side latches at the same time, in pairs, until all ten latches are closed.

n. Keep the container and all packing materials for reuse or return complete container to battalion ammunition section. Covers and bodies of containers form a set. Do not separate or mix covers and bodies.

### 5-21.2 Inspection (M712 projectile).

Perform the following inspections immediately after the projectile is unpackaged from its container. If a projectile is found to be unserviceable as a result of damage or other defects as described below, repackage the projectile in its original container and return to battalion ammunition section. Attach a tag describing the defects.

a. Inspect the window area of the nose cone to make sure that it is clean and that there are no cracks, fogging, indication of moisture on the inside of the window, or other damage. Clean a dirty window using lens paper (item 34, Appx D) or tissue. Reject a projectile as unserviceable for any of the following reasons:

   (1) Window cannot be properly cleaned.

   (2) Window shows signs of fogging or has moisture on the inside.

   (3) Window is cracked, broken, or badly gouged.

b. Inspect code and time switches for dirt. Numbers and index marks must be legible. Remove dirt using lens paper (item 34, Appx D). Reject a projectile as unserviceable for any of the following reasons:

   (1) Missing or broken switch dials.

   (2) Switch dials cannot be properly cleaned to make numbers and index marks legible.

   (3) Switches cannot be rotated freely when the firing codes are being set into the projectile. Turn switches, using a screwdriver or the tang end of the M18 fuze setter wrench, to check that switches turn. A click should occur at each number.

c. Reject a projectile as unserviceable if the obturator has a crack or large gouge.

d. Inspect wing and fin slots to make sure there is no dirt, debris, or other foreign matter in the slots. If debris is found, attempt to clean out the slots. Reject as unserviceable if foreign material cannot be removed.

## 5-21 UNPACKAGING AND INSPECTION - CONTINUED

### 5-21.2 Inspection (M712 projectile) - Continued

e. Inspect fins to make sure that they are not in extended position. If they are, perform either (1) or (2) below to relatch fins. Reject projectile as unserviceable if fins cannot be relatched.

(1) If fin is only part way out, gently push fin back into its slot until it locks in place.

(2) If fin is locked in extended position, insert a small screwdriver, knife blade, or similar tool into fin slot as shown below. Depress locking pin with the tool and push fin forward at the same time to lock fin in retracted position.

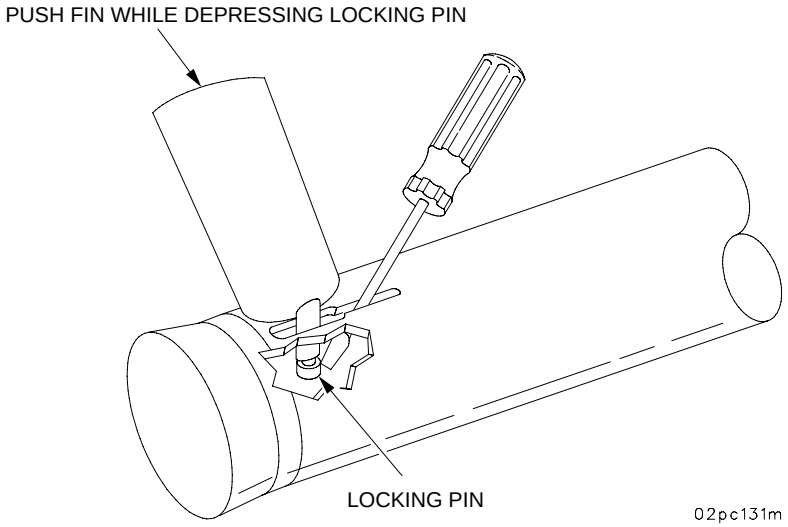


f. Inspect the overall projectile to make sure that there is no caked-on dirt, excessive corrosion, loose or missing items such as screws or access covers, or other damage. Remove dirt, minor corrosion, and foreign matter using lens paper (item 34, Appx D) or tissue. Inspect for loose or missing screws (see illustration in para 5-20). If any splice screw or access cover screw is loose, attempt to make finger tight by turning. Reject a projectile as unserviceable if there is excessive corrosion or screw missing on access cover. Minor corrosion, minor gouges, burrs on metal projectile body, and/or missing splice screw(s) are acceptable. Screws slightly above flush are acceptable after tightening.

### 5-21.3 Inspection (M823 projectile).

Since the M823 projectile will be reused many times, it will be rejected only for the following reasons:

a. Nose cone is cracked or broken.

b. One or more switches cannot be rotated or will not stay set to a number.

c. Severe damage to projectile body which could prevent it from being rammed or extracted, and cause damage to the interior of the tube.

d. Badly damaged or worn obturator which results in fallback.

e. Damaged base which prevents proper extraction.

## 5-22 PREPARATION FOR FIRING.

**WARNING**

- Forcing cone in the tube must be free of oil and grease before ramming. Oil or grease may permit projectile fallback.
- After extracting an M712 projectile from a hot tube, clean the forcing cone of melted plastic. Failure to do so may result in projectile fallback. Cleaning may be accomplished by firing another type projectile, if mission requirements permit, or firing a propelling charge alone.

**NOTE**

For training purposes, the M823 training projectile will be used instead of the M712 projectile. All operational procedures which apply to the M712 also apply to the M823 projectile. However, no live propelling charges are to be used with the M823 training projectile.

a. Unpackage and inspect M712 projectile or M823 projectile (para 5-21.1).

b. Makes sure that the extractor is set up and ready for use as described in para 5-24.2.

c. After unpackaging the projectile, cannoneer will set the code and time switches using a screwdriver or the tang end of the M18 fuze-setter wrench. The fire direction center will announce this setting in the fire command in the same place as they usually send “time” for time or VT fuzes. This switch setting will always have five numbers. Switches will be set from left to right as seen when facing the nose of the projectile from the base of the round. Switches are circular dials that can be rotated clockwise or counterclockwise as many times as required without damaging the switches. The appropriate number on the switch must be aligned with the scribe line.

## 5-22 PREPARATION FOR FIRING - CONTINUED

### NOTE

- Be sure to set switches in correct sequence. Always set first switch on left (looking from base of projectile toward nose) first, then the next switch to the right, etc., until all five switches have been set.
- A noticeable click should occur at each number on the switch. This click may be heard and/or felt.

(1) Rotate switch at least one complete turn, either clockwise or counterclockwise.

(2) Continue turning switch past correct number and toward the next adjacent number (but stop before reaching next number).

(3) Turn switch back the other way and set on correct number. Be sure that number on switch is centered on scribe line.

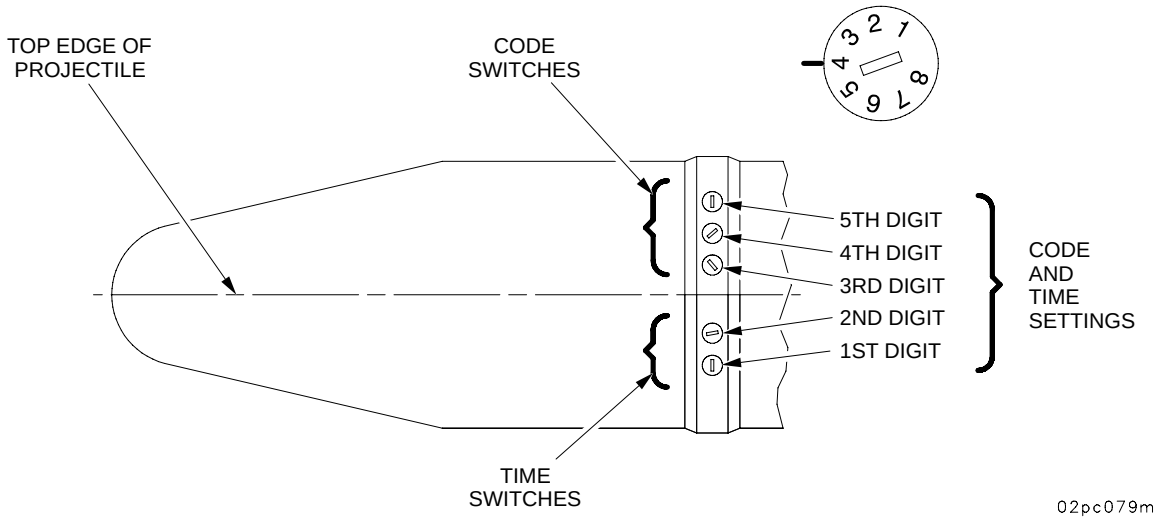

## 5-22 PREPARATION FOR FIRING - CONTINUED

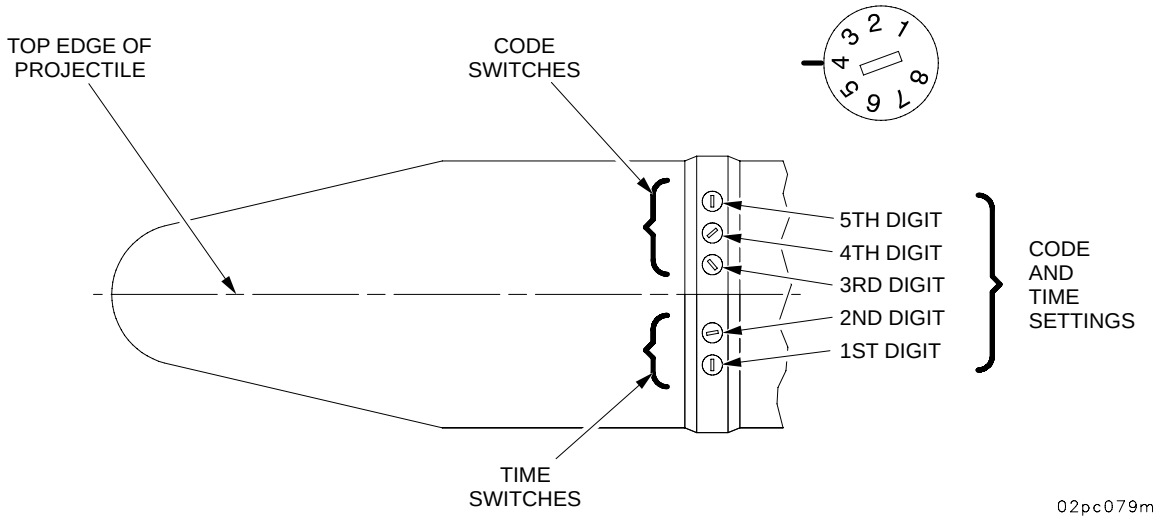


d. Set the elevation of the tube to approximately 300 mils. Place loading tray in loading position.

e. Pass the projectile through the rear of the howitzer.

f. Place the projectile on the loading tray with the nose cone window approximately 3 in. (7.62 cm) from the breech ring. Support the rear end of the projectile at all times until it is loaded into the tube. Recheck the nose cone window and obturator for cleanliness. If necessary, they are wiped clean using lens paper (item 34, Appx D) or tissue.

g. Rotate the projectile until code and time switches are up and then push projectile forward until switches are directly under overhead light (approximately 10 in. (25.40 cm) from breech ring).

h. Visually recheck code and time switches. If numbers are not centered on scribe lines or correct numbers have not been set, set them now, following procedures in step c. Verify that the steel fin and wing retainer clamps have been removed. If the clamps have not been removed, remove before ramming the round.

i. The projectile is now ready to load for firing. Loading, ramming, and firing the M712 projectile is the same as for all other ammunition in this manual.

## 5-23 MISFIRE AND CHECKFIRE PROCEDURES.

The precautions and actions associated with misfire and checkfire are the same for the M712 projectile as for other projectiles in this manual. Refer to para 2-19.

## 5-24 OPERATION OF EXTRACTOR ASSEMBLY.

### 5-24.1 General.

The extractor assembly is used to remove the M712 and M823 projectile from the weapon breech. The following procedures include setting up the extractor in preparation for use, and the breakdown procedures for stowage by cannoneer.

## 5-24 OPERATION OF EXTRACTOR ASSEMBLY - CONTINUED

### 5-24.2 Setup For Use.

a. Get extractor assembly from stowage brackets on right wall of the crew compartment.

b. Inspect to make sure that the five guide inserts (1) on the extractor assembly are not extended.

c. While standing at the rear, loosen drive nut (2) (clockwise) to farthest white marks (forward mark).

d. Move brace (3) back.

e. Loosen two straps (4 and 5).

f. Remove ratchet (6).

g. Disengage locking pin (7).

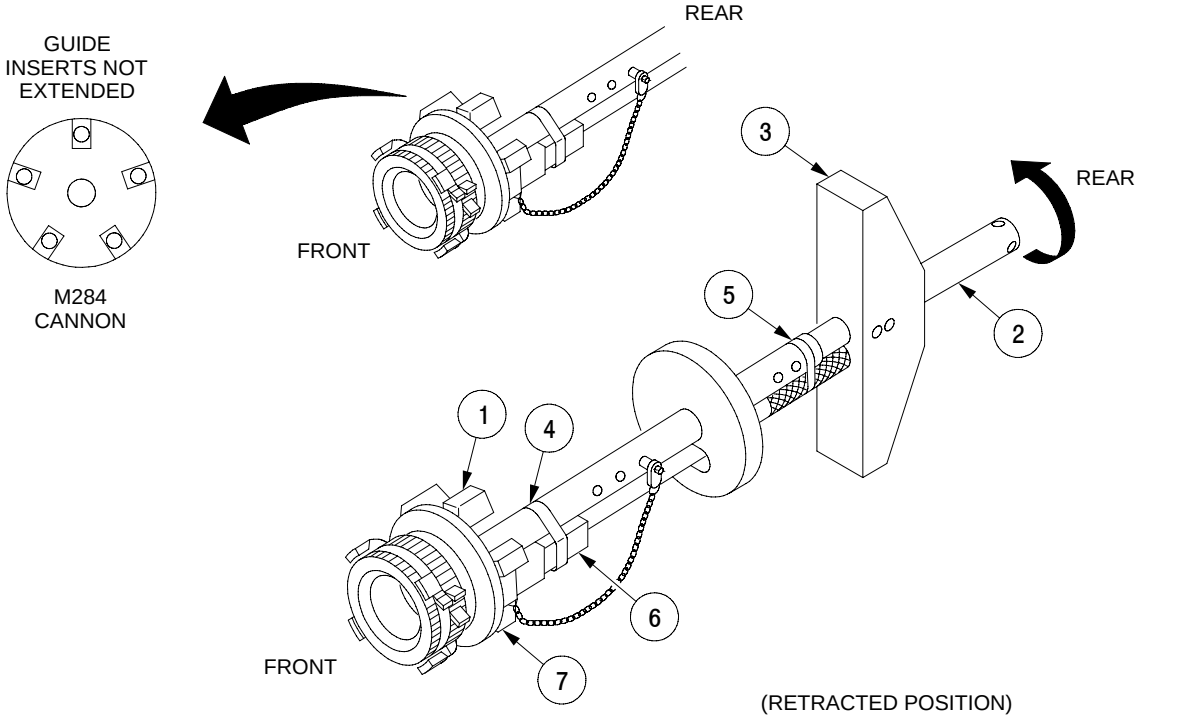

# 5-24 OPERATION OF EXTRACTOR ASSEMBLY - CONTINUED

## 5-24.2 Setup For Use - Continued

h. Extend telescoping shafts until hole in solid shaft (8) aligns with the nearest hole (9) in the hollow shaft (10).

i. Move alignment support (11) forward midway between locking pin chain screw (12) and the two holes (9 and 13) at end of the hollow shaft (10).

j. Guide the locking pin (7) through the slot in alignment support (11).

k. Insert locking pin (7) completely through both shafts (8 and 10) into hole (9).

l. Turn drive nut (2) counterclockwise until forward end of drive nut aligns with guide mark (white) on solid shaft (8) of extractor. Use rear mark (M198) for the M109A6 howitzer.

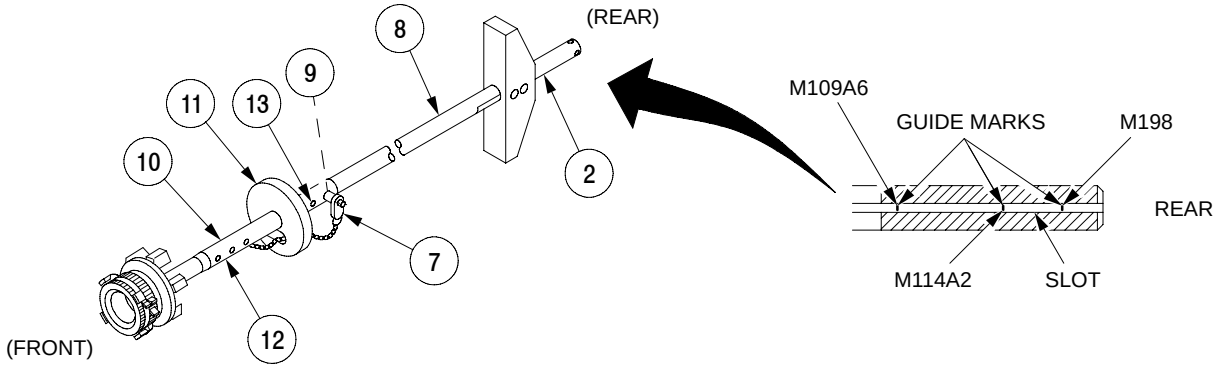


m. Cock extractor as follows:

(1) Compress expansion ring (14) by squeezing tabs (15) together.

(2) Align cutout in retaining ring (16) with tabs (15) on expansion ring (14) and slide retaining ring (16) forward over expansion ring (14).

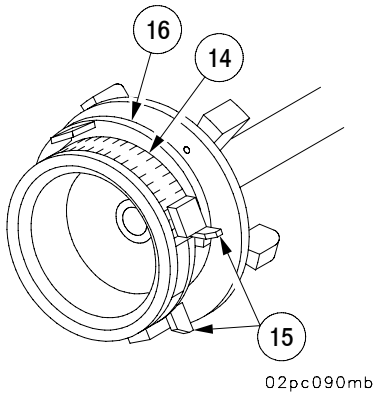

## 5-24 OPERATION OF EXTRACTOR ASSEMBLY - CONTINUED

### 5-24.3 Setup for Use Under Conditions of Poor Visibility.

If the extractor is being expanded under conditions of poor visibility, the alignment hole and shaft detent may be used as described below.

a. Disengage locking pin (7) and pull solid shaft (8) from hollow shaft (10).

b. Move alignment support (11) forward to the two holes (9 and 13) in hollow shaft (10).

c. Guide locking pin (7) through the slot in the alignment support (11).

d. Insert locking pin (7) in the alignment hole (13) (second hole from end of hollow shaft) (10).

e. Insert solid shaft (8) in hollow shaft (10) and rotate until alignment detent in end of solid shaft (8) rests against locking pin (7).

f. While holding both shafts, to prevent them from turning or sliding, remove locking pin (7) from alignment hole (13) and insert pin completely through farthest hole (9) to lock both shafts in extended position.

g. Turn drive nut (2) counterclockwise until forward end of drive nut aligns with guide mark (white) on solid shaft (8) of extractor. Use rear mark (M198) for the M109A6 howitzer.

h. Cock extractor as follows:

(1) Compress expansion ring (14) by squeezing tabs (15) together.

(2) Align cutout in retaining ring (16) with tabs (15) on expansion ring (14) and slide retaining ring (16) forward over expansion ring (14).

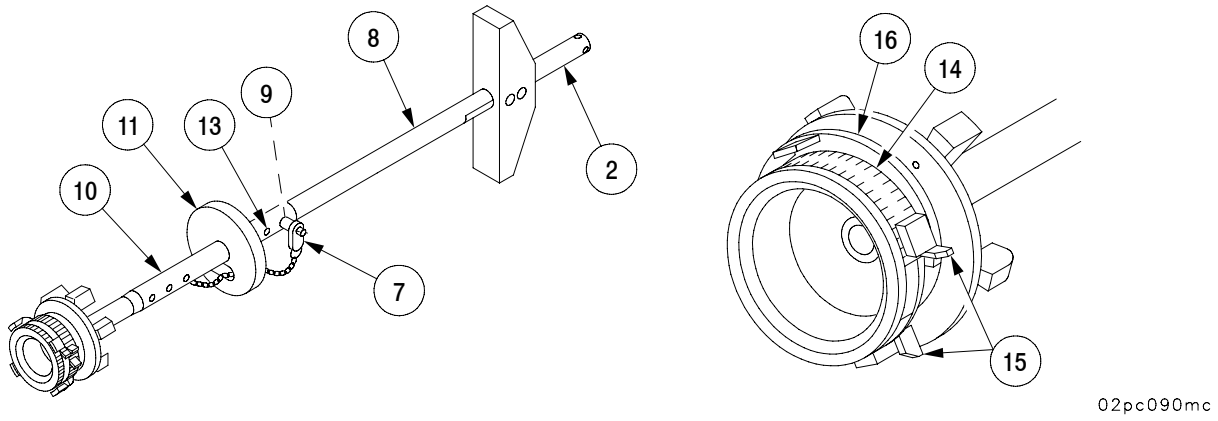

## 5-24 OPERATION OF EXTRACTOR ASSEMBLY - CONTINUED

### 5-24.4 Breakdown for Stowage.

a. Disengage locking pin (7) and compress telescoping shafts to retracted position.

b. Guide locking pin (7) through slot in alignment support (11).

c. Insert locking pin (7) completely through solid shaft (8) and hollow shaft (10).

d. Remove ratchet (6) and guide ratchet handle through the slot in alignment support (11).

e. Strap ratchet (6) to hollow shaft (10), using the straps (4 and 5) provided.

f. Slide brace (3) forward until it touches end of ratchet handle. Turn drive nut (2) counterclockwise until brace (3) is held firmly against ratchet handle.

g. Check to see if extractor is cocked. If it is not cocked, perform the following:

(1) Compress expansion ring (14) by squeezing tabs (15) together.

(2) Align cutout in retaining ring (16) with tabs (15) on expansion ring (14) and slide retaining ring (16) forward over expansion ring (14).

h. Stow extractor in stowage brackets on right sponson (see Appendix E).

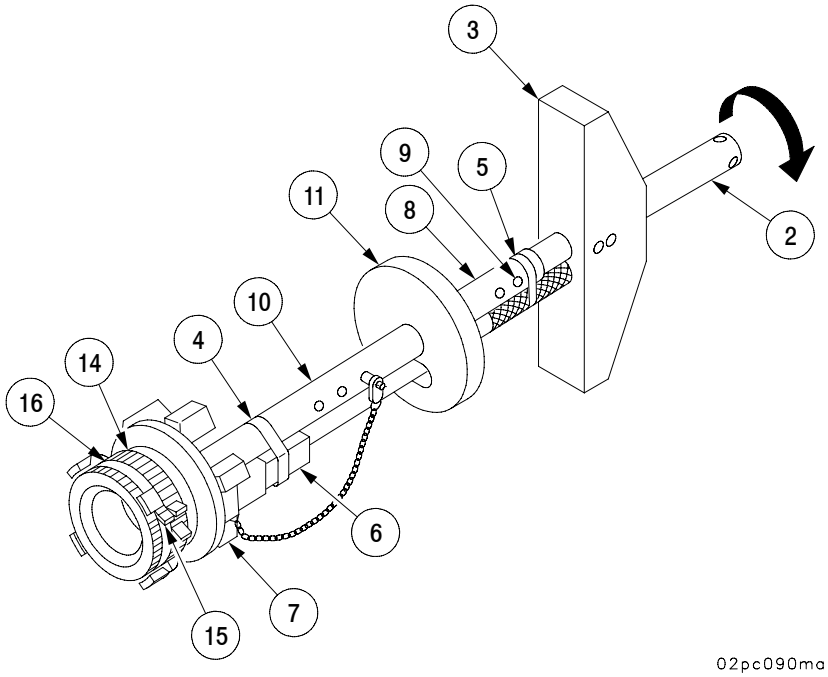


## 5-25 UNLOADING AN M712 PROJECTILE.

### 5-25.1 Removal of Primer and Propelling Charge.

a. Gunner removes primer and propelling charge as performed for other ammunition in this manual.

b. Chief of section elevates/depresses tube to approximately 300 mils.

c. Cannoneer positions loading tray in loading position.

## 5-25 UNLOADING AN M712 PROJECTILE - CONTINUED

### 5-25.2 Unloading Projectile M712.

Cannoneer unloads the M712 projectile as follows:

**CAUTION**

- Do not use bell rammer to unload the M712 projectile.
- Ensure rammer loading tray is in the loading position.

a. Obtain extractor.

b. Check to see if extractor is cocked. If ring is cocked, proceed to step c; otherwise, cock extractor as follows:

(1) Compress expansion ring by squeezing tabs together.

(2) Align cutout in ring retainer with tabs on expansion ring and slide ring retainer forward over expansion ring.

c. Insert extractor through breech ring until forward end makes contact with base of projectile. Push extractor firmly against projectile until expansion ring is seated in the base of the projectile. If extractor did not engage, remove it from tube, repeat step b and this step.

d. Turn extractor drive nut counterclockwise by hand until brace touches and is centered across face of breech ring.

e. Connect ratchet to end of extractor drive nut. Set ratchet to OFF and turn ratchet counterclockwise until projectile is pulled free of forcing cone. Remove ratchet from drive nut.

f. Let the projectile and extractor slide slowly out of tube until base of projectile passes through breech ring. Projectile will have to be raised a little to pass obturator over Swiss groove.

g. Release extractor by squeezing tabs on expansion ring.

h. Chief of section and the cannoneer pass the projectile out of the howitzer to driver and gunner. Driver and gunner repackage the projectile. If the projectile is loaded in a hot tube, follow the procedures in para 2-18.

## 5-26 M712 AMMUNITION PREPARED FOR FIRING, BUT NOT FIRED.

### 5-26.1 General.

M712 projectiles that have been unpackaged but not fired will be repackaged within 30 days and returned to battalion ammunition section for further disposition. Long exposure of the projectile to sunlight and other elements may cause it to fail. Code and time switch settings made during preparation need not be reset. A projectile that has been unloaded from a weapon as result of a misfire or checkfire will be repackaged as described below.

## 5-26 M712 AMMUNITION PREPARED FOR FIRING BUT, NOT FIRED - CONTINUED

### 5-26.2 Repackage Projectile.

Repackage the M712 projectile as follows:

**NOTE**

An M712 projectile which has been rammed and extracted from a cold tube may be reused.

a. Wipe all loose dirt and moisture from projectile.

b. Locate original container. If container has become unserviceable, replace container. If original container cannot be found or has been replaced for unserviceability, make sure that markings on replacement container match markings on projectile. If markings do not match, return to battalion ammunition section for remarking.

c. Install projectile into container as follows:

(1) Check red decals, stencilling, or stamping (if present) at nose end of container halves to assure cover body match. Switch container halves, if required.

(2) Open container, following procedure in para 5-21.1. Remove lifting straps. Also remove fin and wing preload bands.

**CAUTION**

Make sure that all four fin/wing retainer blocks securely engage fins/wings.

(3) Install fin and wing preload bands on projectile.

(4) Install lifting straps on projectile.

(5) Spin tension mechanism counterclockwise by hand until it stops.

(6) Lift projectile and position over opened container.

(7) Carefully lower projectile, guiding nose cone into retainer ring in the container.

(8) Using torquing rod, turn tension mechanism clockwise, as far as possible, to snug projectile into the retainer ring. Position torquing rod in holes so that rod is horizontal (or as close to it as possible). This is required to avoid interference with the cover stops inside the cover.

(9) Be sure that desiccant and protective bags are placed inside container.

(10) Place container cover on lower container half in a manner that aligns the inside cradles and places both the relief valve and humidity indicator to the rear of the container.

(11) Starting on the end opposite the humidity indicator, straddle container, place T-bolts in cover recesses and close corresponding left and right side latches at the same time in pairs.

## 5-27 STOWAGE OF M712 PROJECTILES IN M109A6 HOWITZER.

### 5-27.1 General.

Stowage facilities are provided for two M712 projectiles in the crew compartment of the M109A6 howitzer. Use of these projectiles is reserved for the time when the howitzer is operating in a buttoned-up mode or when M712 projectiles are not available from the external ammunition carrier.

### 5-27.2 Stowage.

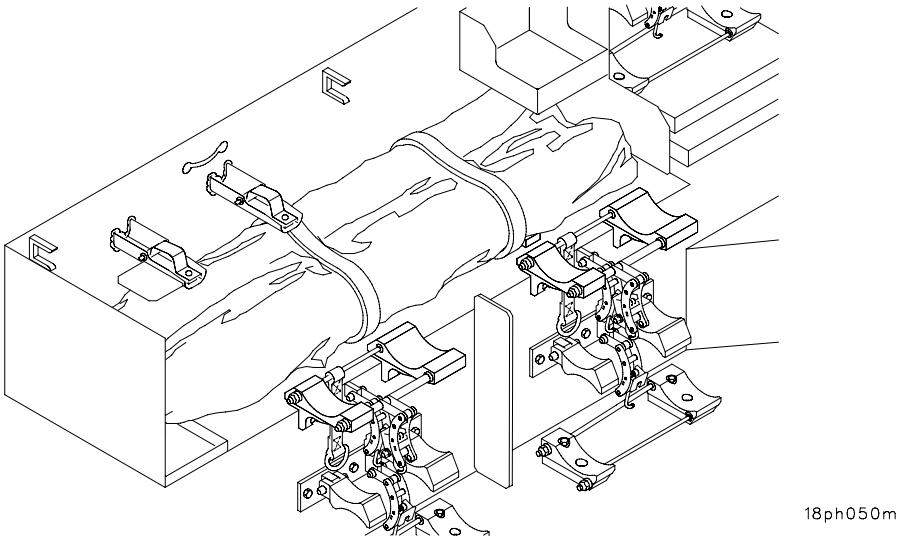


The chief of section assisted by cannoneer will place two uncontainerized projectiles on the right-side sponson, with nose cone facing forward. Install protective bag as follows:

a. Obtain protective bag from container and remove tie-wraps.

b. Remove lifting straps from projectile and place straps in container. Raise front of projectile. Second man slides protective bag over projectile as far as possible.

c. Lower projectile into cradle.

d. Raise base of projectile and slide bag over remainder of projectile.

e. Lower projectile into cradle.

f. Secure open end of protective bag with tie-wrap provided.

g. Securely fasten projectile to sponson with two straps provided on sponson, tightening ratchets on straps.

h. Repeat steps a thru g for second projectile.

## 5-28 STOWAGE OF EXTRACTOR ASSEMBLY IN HOWITZER.

Stow the extractor in the holding brackets provided (see Appendix E). Due to space limitations, the extractor must be stowed in the retracted position. See para 5-24.4 on how to break extractor down for stowage.

## 5-29 M712 PROJECTILE MAINTENANCE.

Humidity indicators on containerized M712 projectiles must be monitored for humidity every 90 days, as a minimum. If relative humidity in the container is 40 percent or greater (40 percent section of humidity indicator card is not blue), turn containerized projectile in to battalion ammunition section.

# CHAPTER 6
# FOREIGN AMMUNITION (NATO)

## Section I. GENERAL

### 6-1. GENERAL

**NOTE**

The Automatic Fire Control System's fire mission system menu does not support the use of NATO ammunition in the M109A6 howitzer. The platoon operation center will have to provide the chief of section with data for a manual fire mission.

a. Agreements between the United States and NATO allies have established the interoperability of weapon systems and ammunition of the nations. The agreements enable the safe and effective firing of major types of ammunition of the same size from the same compatible size and type weapon of the NATO armies.

b. The following pages cover only authorized German (GE), United Kingdom (UK), Canadian (CA), Netherlands (NL), French (FR), Norwegian (NO), Italian (IT), Danish (DA), Greek (GR), or Belgian (BE) 155MM components. If a munitions item has not been authorized, it is because (1) it has not yet been determined to be safe to fire or (2) it has been determined that the munitions item cannot be safely fired from the U.S. weapon system.

**WARNING**

Failure to comply with the following warning could result in serious injury or death.

- Only under emergency combat conditions will zone 1 of M3A1 and DM62 propelling charge be fired from the M284 tube on the M109A6 howitzer weapon system. Zone 1 will be restricted when firing the M107 projectiles or equivalents, zone 1 and 2 will be restricted with the L15 series, DM105, DM106, or HEAT FRAG projectiles.

- Do not mix US, GE, UK, CA, NL, FR, NO, IT, DA, GR or BE components (i.e., projectile, propelling charge, flash reducer, fuze). Fire only all components from one nation except GE primer DM191A1 and projectile DM702/DM702A1. GE must use DM191A1 primer when firing US, GE, UK, CA, NL, NO, IT, DA, GR, or BE 155MM munitions. US must use US fuze, charge and primer when firing the GE DM 702/DM702A1 projectile.

**NOTE**

At the conclusion of any training exercise, ammunition drawn from NATO nation and not fired should be returned to the troops of the NATO nation from whom it was obtained.

## Section II. PROJECTILES

### 6-2 AUTHORIZED PROJECTILES.

**WARNING**

The L8A1 (Z7) and L10A1 can only be fired with the projectiles L15 series, DM105, DM106, all HEAT FRAG, HERA and DPICM projectiles listed. Failure to comply with this warning could result in serious injury or death.

a. The following GE munitions are authorized for use in M109A6 howitzers:

| | |
|---|---|
| Projectile | 155MM, HE, DM21 (TNT-loaded only); HE, L15A1, L15A2, SMK, HC, DM105; Illum, DM106; HEAT FRAG, DM602 DM612, DM632, DM642; HEAT FRAG BB, DM652, DM702/DM702A1 SMArt |
| Charge, Propelling | Green bag, DM62 (Zones 2-5) |
| Charge, Propelling | White bag, DM42B1 (Zones 3-7); L8A1 (Zones 2-7); L10A1 (Zone 8) |
| Fuze | Point detonating, DM211, DM241; MTSQ, DM143, DM153, DM163; PPD DM34; ETSQ, DM52 |
| Primer | Use only U.S. M82 primer. Do not use GE DM191A1 primer. |

b. The following UK munitions are authorized for use in M109A6 howitzer:

| | |
|---|---|
| Projectile | 155MM, HE, M107 (TNT-loaded only); HE, L15A1, L15A2; SMK, HC, DM105; Illum, DM106 |
| Charge, Propelling | Green bag, M3A1 (Zones 2-5) |
| Charge, Propelling | White bag, M4A2 (Zone 3-7); L8A1 (Zones 2-7); L10A1 (Zone 8) |
| Fuze | Point detonating, M557, L85A2, L106A1, L106A2, L112A1; MTSQ L92A2 |
| Primer | M82<br>Do not use DM191A1 primer |

## 6-2 AUTHORIZED PROJECTILES - CONTINUED

c. The following CA munitions are authorized for use in M109A6 howitzers:

| | |
|---|---|
| Projectile | 155MM, HE, M107 |
| Charge, Propelling | Green bag, M3[1]; M3A1 (Zones 2-5);<br>White bag, M4A1[1]; M4A2 (Zones 3-7) |
| Fuze | Point detonating, M557, M739; MTQS, M564,<br>Proximity, M514A1[2] |
| Primer | M82 |

d. The following NL munitions are authorized for use in M109A6 howitzers:

| | |
|---|---|
| Projectile | 155MM, HE, M107, M107C1[3], M107B3[4] (TNT-loaded only) |
| Charge, Propelling | Green bag, M3C1[3] (Zone 2-5), M4A1, M4C3[3]<br>White bag (Zones 3-7) |
| Fuze | Point detonating, M557, M557C1[3] |
| Primer | M82, M82C1[3] |

**NOTE**

FR troops must use MK2A4 primer in FR F3 AMSP weapon.

e. The following FR munitions are authorized for use in M109A6 howitzers:

| | |
|---|---|
| Projectile | 155MM, HE, M107 |
| Charge, Propelling | Green bag, M3[1] (Zones 1-5) |
| Charge, Propelling | White bag, M4A1[1] (Zones 5-7) |
| Fuze | Point detonating, M557 |
| Primer | Use US M82 only.<br>Do not use MK2A4 primer |

1 These charges do not have flash reducers.

2 VT fuze M514A1 is now used by the U.S. for emergency combat use only, not to be fired in training.

3 NL manufacture.

4 U. S. modified M101.

## 6-2 AUTHORIZED PROJECTILES - CONTINUED

**WARNING**

Failure to comply with the following warning could result in serious injury or death.

- Do not fire M107 projectiles when lot number starts with RA.
- Interchange firings will be with TNT-loaded M107 projectiles.

f. The following NO munitions are authorized for use in M109A6 howitzers:

| | |
|---|---|
| Projectile | 155MM, HE, M107 (TNT-loaded only) |
| Charge, Propelling | Green bag (None) |
| Charge, Propelling | White bag, NM23 (Same as US M4A2) (Zone 3-7) |
| Fuze | Point detonating, M557 |
| Primer | M82 Do not use DM191A1 primer |

g. The following IT munitions are authorized for use in M109A6 howitzers:

| | |
|---|---|
| Projectile | 155MM, HE, M107 (TNT-loaded only); HE, L15A1, L15A2; SMK, HC, DM105, DM105A1; Illum, DM106 |
| Charge, Propelling | Green bag, M3A1 (Zones 3-5) |
| Charge, Propelling | White bag, M4A2, DM42 (Zones 3-7); L8A1 (Zones 3-7); L10A1 (Zone 8) |
| Fuze | Point detonating, M557, MTSQ, M564; VT, FB375B |
| Primer | M82 Do not use DM191A1 primer |

h. The following DA munitions are authorized for use in M109A6 howitzers:

| | |
|---|---|
| Projectile | 155MM, HE, M107 (TNT-loaded only) |
| Charge, Propelling | Green bag, M31[1], M3A1 (Zones 2-5) |
| Charge, Propelling | White bag, M4A1[1], M4A2 (Zones 3-7) |

[1] These charges do not have flash reducers.

## 6-2 AUTHORIZED PROJECTILES - CONTINUED

Fuze ..... Point detonating, M557C1[3], MTSQ, M564

Primer ..... M82

i. The following GR munitions are authorized for use in M109A6 howitzers:

Projectile ..... 155MM, HE, M107, M107B2

Charge, Propelling ..... Green bag, M3[1], M3A1 (Zones 2-5)

Charge, Propelling ..... White bag, M4A1[1]; M4A2 (Zones 3-7)

Fuze ..... Point detonating, M557; MTQS, M564

Primer ..... M82

j. The following BE munitions are authorized for use in M109A6 howitzers:

Projectile ..... 155MM, HE, M107, M107B2 (TNT-loaded only)

Charge, Propelling ..... Green bag, M3[1] (Zones 2-5)

Charge, Propelling ..... White bag, M4A1[1] (Zones 3-7)

Fuze ..... Point detonating, M557, MTSQ, M564

Primer ..... M82

**NOTE**

Except as noted above, preparations for firing GE, UK, CA, NL, FR, NO, IT, DA, GR, or BE munitions in U.S. weapons system (preparation for firing, precautions during firing, misfire procedures, etc.) are contained in Chapter 2 and Chapter 5 of this manual.

k. The following U.S. munitions are authorized for use in GE M109A3GEA1, UK M109A2/A3, FH70, AS-90, CA M109A2/A3, NL M109A2/A3, FR F34AM and NO M109A3GN, IT M109G or M109L, DA M109A3, GR M109A1B, M198, and BE M109A2/A3.

**NOTE**

- During training exercises, give either TNT or Comp B loaded 155MM, HE, M107 projectiles to NL and FR troops. All other nations should be given TNT-loaded projectiles only.
- In the FH70, M109A3GEA1, AS-90, M109L use all those listed plus propelling charge, red bag M203 and M203A1.
- The M82 primer can not be used in the FH 70 or M109A3GEA1. Use the DM191A1 primer only in those weapons.

1 These charges do not have flash reducers.
3 NL manufacture.

## 6-2 AUTHORIZED PROJECTILES - CONTINUED

| | |
|---|---|
| Projectile | HERA M549A1<br>DPICM M483A1<br>DPICM-BB M864 |
| Charge, Propelling | Red bag M119A2 |
| Primer | M82 |

l. The authorized projectiles and their characteristics are as follows:

**NOTE**

- Do not fire below Charge (Zone) 2, DM62 with this projectile in the M284 cannon.
- Do not fire above Charge (Zone) 6, L8A1 with this projectile in the M284 cannon.

(1) Projectile, 155MM: HE, DM21(GE). This projectile if fired from 155mm howitzers and is used for blast effect, fragmentation, and mining.

The projectile is a hollow steel shell filled with TNT. The shape is ogival with a boatail for aerodynamic efficiency. A supplementary charge of 0.3 lb (0.136 kg) TNT is sealed in an aluminum container placed in the fuze cavity of the projectile. The projectile weighs approximately 92.3 lbs (41.9 kg). A threaded lifting plug closes the fuze cavity at the nose of the projectile for handling. A point detonating fuze is used with this projectile. A rotating band encircles the shell casing near the base and is protected by a grommet before loading. A steel plate (base cover) is welded over the base to prevent entry of hot propellant gases into the projectile interior.

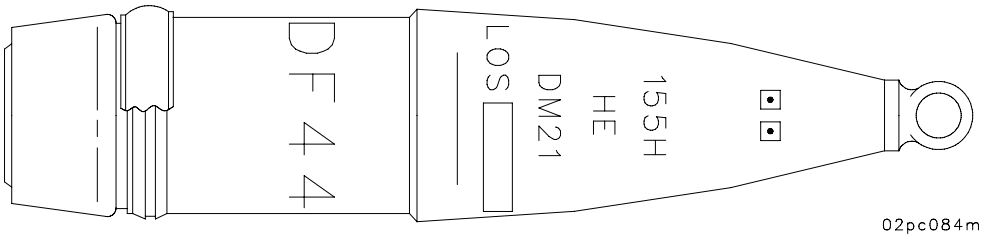


DM21 PROJECTILE

## 6-2 AUTHORIZED PROJECTILES - CONTINUED

**NOTE**

With the exception of a yellow hazard band around the body of renovated projectiles, these UK munitions are identical to U.S. munitions.

(2) Projectile, 155MM, HE, M107 (Normal and Deep Cavity (UK, CA, FR, NO, IT, DA, GR, and BE)). The high projectile is used for blast effect, fragmentation, and mining. The projectile is a hollow steel shell, filled with TNT. Point detonating fuze is used with this projectile. A supplementary charge of 0.3 lb (0.136 kg) TNT is sealed in an aluminum container placed in the fuze cavity of the projectile. The projectile weighs approximately 92.3 lb (41.9 kg).

M107 PROJECTILE

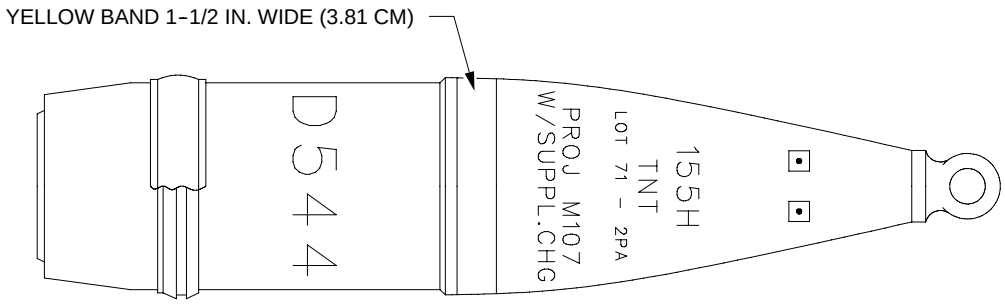


PROJECTILES, AS MANUFACTURED, DO NOT HAVE THIS BAND.
IT IS ADDED ONLY WHEN PROJECTILE IS RENOVATED (UK ONLY).

02pc085m

(3) Projectile, 155MM, HE M107C1 (NL). This high explosive projectile is used for blast effect, fragmentation, and mining. The projectile is a hollow steel shell, filled with TNT. Point detonating, time or proximity (deep cavity only) fuzes may be used. The projectile weighs approximately 92.3 lbs (41.9 kg).

M107C1 PROJECTILE

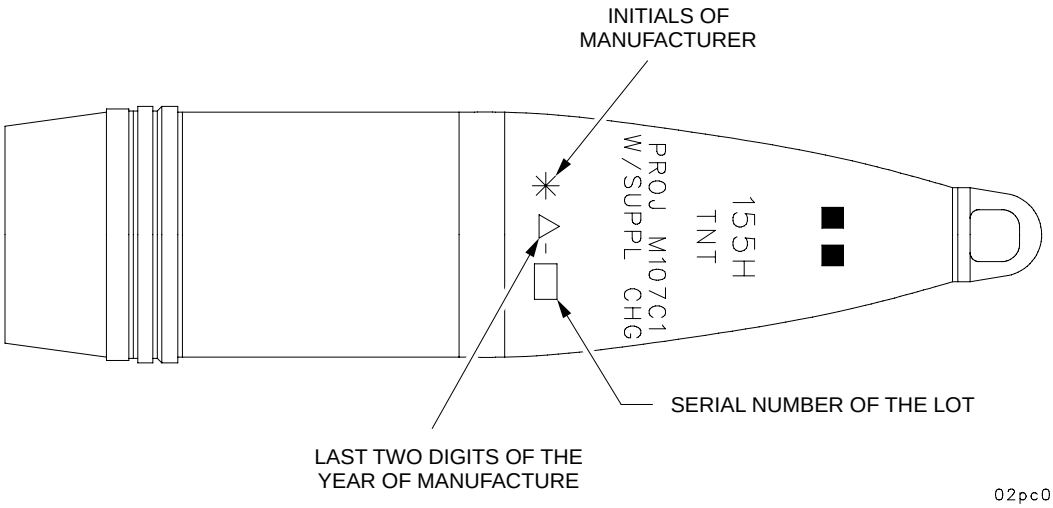


02pc086m

## 6-2 AUTHORIZED PROJECTILES - CONTINUED

**WARNING**

The L15A2 is not to be fired if the obturator is missing or broken as rotating band failure and short rounds may result. If the band is displaced and can be repositioned to remain in the groove, the projectile can be fired. Failure to comply with this warning could result in serious injury or death.

(4) Projectile, HE, 155MM L15A1/L15A2 (GE, IT, UK). The projectile is a high fragmenting steel shell with a swaged guided metal rotating band encircling the case near the base of the shell. The base is protected by a carbon steel base plate to ensure hot gases generated by the burning propelling charge cannot come in contact with the explosive charge. The main explosive charge is an RDX-TNT mixture and the supplemental charge is an RDX-WX8 composition. The A2 designation adds an obturator band behind the rotating band for improved performance in worn tubes.

L15A1/L15A2 PROJECTILE

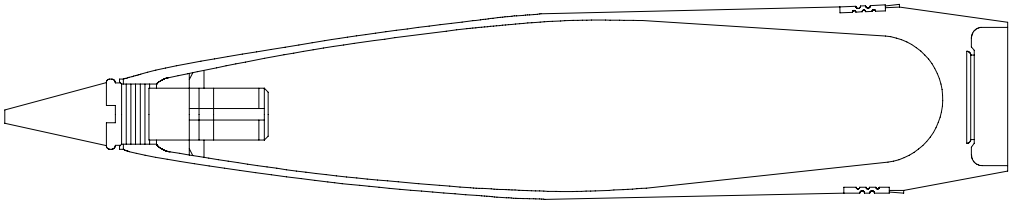

02pc087m

**WARNING**

Projectiles DM105 and DM106 are not to be fired in 4th Qtr guns at Charge 7 (L8A12) or Charge 8 (L10A1). Failure to comply with this warning could result in serious injury or death.

(5) Projectile, Smoke, 155MM, DM105 (GE, IT, UK). The projectile DM105 is a base eject projectile of hollow steel construction containing four canisters of HC (white) smoke composition. The canisters are stacked in the projectile and are ignited by hot gases from the black powder explosion charges which eject the canisters from the shell. Ignition occurs approximately 4.5 seconds after explosion and the resulting smoke has a minimum duration of 3 minutes.

DM105 PROJECTILE

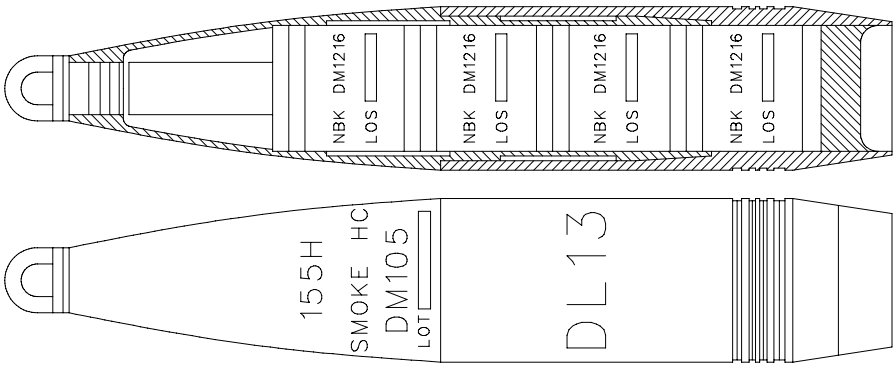


02pc088m

## 6-2 AUTHORIZED PROJECTILES - CONTINUED

**NOTE**

THE DM106 might not operate reliably when set to function at remaining velocities in excess of 1148 ft/sec (350 m/sec).

(6) Projectile, Illuminating, 155MM, DM106 (GE, IT, UK). A hollow steel shell containing a canister with a primary expulsion charge. As this charge expels the canister it ignites a delay element on the canister and upon expulsion, a braking parachute and anti-rotation brake are deployed. After three seconds, the delay element in the canister ignites a secondary expulsion charge. This charge ignites the illuminating element causing the main parachute and secondary anti-rotation brake to be deployed while also expelling the illuminate from the canister. The illuminate burns for a minimum of 60 seconds and produces 1,800,000 candle power of light intensity.

DM106 PROJECTILE

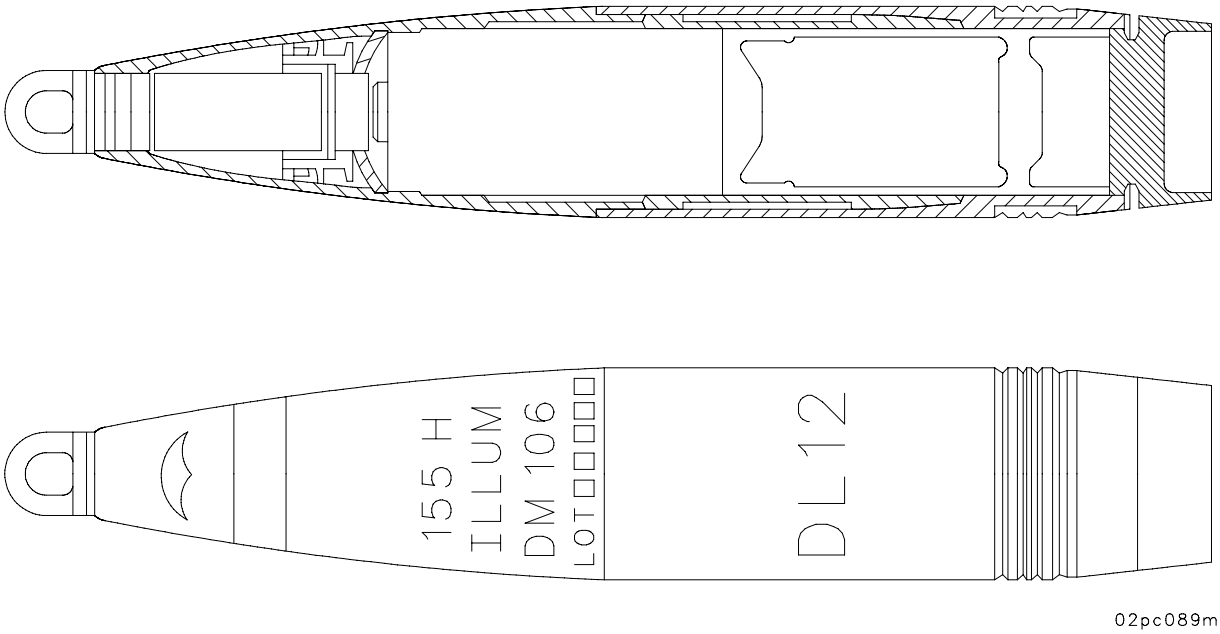

## 6-2 AUTHORIZED PROJECTILES - CONTINUED

**NOTE**

All projectiles DM602, DM612, DM632, and DM642 have the same physical appearance. The cross section shown is common for all.

(7) Projectile, 155MM, Heat-Frag, DM602 (GE). This projectile is used to deliver a cargo of submissile dual purpose munitions to defeat semi-hard and soft-hard and soft targets. The DM602 is an ICM projectile containing 63 grenades, DM1348. Each grenade consists of a pre-fragmented steel case, liner, explosive, lead charge, fuze with drag ribbon stabilized and anti-rotational brake. The grenade has a high penetration capacity and provides good fragmentation effects. There are only minor differences in the layout of the projectile body and the expulsion assembly, between the DM602 and DM612. This projectile has not been fired in U.S. weapons.

(8) Projectile, 155MM, Heat-Frag, DM612 (GE). The DM612 is a DPICM projectile containing 63 DM1348 grenades. Each grenade consists of a pre-fragmented steel case, liner, explosive, lead charge, fuze with drag ribbon stabilizer, and anti-rotational brake. The grenade has a high penetration capacity and provides good fragmentation effects. The dual fuzes DM163 or M577 (U.S.) are used as projectile fuzes initiating the expulsion charge (contained in a cavity in the ogive of the projectile) deploying the grenades above the target area after a set time delay. The gas pressure expanding in the ogive acts upon the pusher plate and is transmitted through the grenades to the base plug, shearing the threads securing the plug in the steel and expelling the grenades from the rear end of the projectile. The rotating projectile transfers centrifugal forces to the grenades, which disperse in a circular pattern relative to the trajectory of the projectile. They rotate round their longitudinal axes and are oriented by the drag ribbon stabilizer to drop with the shaped charge facing downward. The drag ribbon stabilizer attached to the firing pin pulls the pin loose, releasing the slide holding the detonator. The anti-rotational brakes will open, the slide will move into firing position through spring and centrifugal forces. Negative acceleration on impact causes the firing pin to stab the detonator which initiates the explosive train, A shaped-charge jet is directed downward to penetrate armor plate while the grenade body bursts into a large number of small fragments effective against soft targets. For storage and transportation safety, the projectile is provided with a fusible lifting plug in the fuze cavity. The difference between the DM642 ICM projectile and the DM612 is that the DM612 does not contain the self-destruct feature grenades, DM1383.

(9) Projectile, 155MM, Heat-Frag, DM632 (GE). The DM632 is a DPICM projectile containing 63 DM1383 grenades. Each grenade consists of pre-fragmented steel body, liner, explosive, lead charge, fuze with self-destruction, drag ribbon stabilizer, and anti-rotational brake. The grenade has a high penetration capacity and provides good fragmentation effects. The projectile DM632 is identical with projectile DM602 except for the modified expulsion charge and grenade fuzes with pyrotechnical self-destruction.

## 6-2 AUTHORIZED PROJECTILES - CONTINUED

(10) Projectile, 155MM, Heat-Frag, DM642 (GE). This projectile is used to deliver a cargo of submissile dual purpose armor defeating and anti-personnel grenades. The DM642 is a DPICM projectile containing 63 DM1383 grenades. Each grenade consists of pre-fragmented steel body, liner, explosive, lead charge, fuze with self-destruction, drag ribbon stabilizer, and anti-rotational brake. The grenade has a high penetration capacity and provides good fragmentation effects. The difference between the DM612 and DM642 is that the DM642 grenades contain a self-destruct feature.

PROJECTILE 155MM DM602, DM612, DM632, DM642

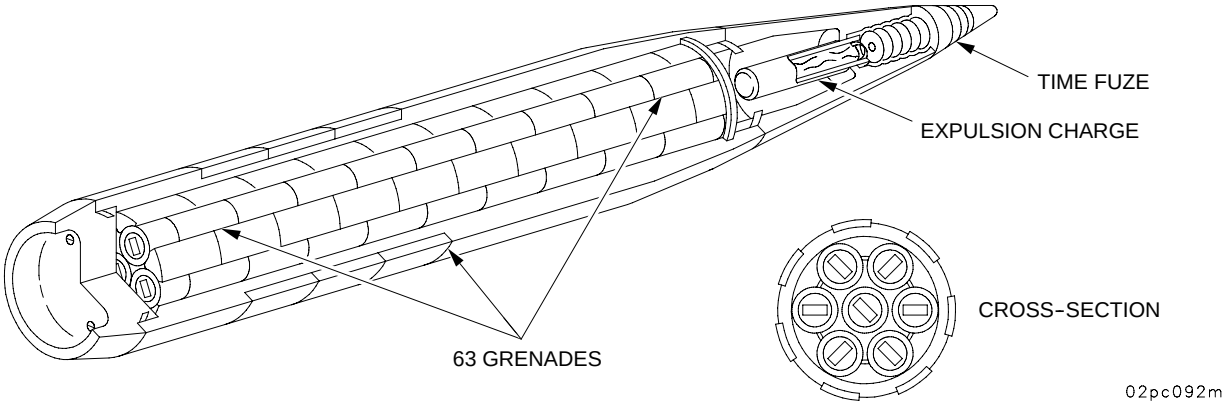


(11) Projectile, 155MM, Heat-Frag, Base Burn, DM652 (GE). This projectile is used to deliver a cargo of submissile dual purpose munitions to defeat semi-hard and soft targets over long ranges. The DM652 is a DPICM projectile containing 49 DM1383 grenades, and has extended range capabilities. The range of this projectile is extended by means of a base bleed motor which discharges gases compensating for the low pressure at the projectile base and thus helps reduce the drag coefficient. Projectile body and base bleed motor are identical with that of U.S. Projectile M864. Each DM1383 grenade consists of prefragmented steel body, liner, explosive, lead charge, fuze with self-destruction, drag ribbon stabilizer, and anti-rotational brake. The grenade has a high penetration capacity and provides good fragmentation effects.

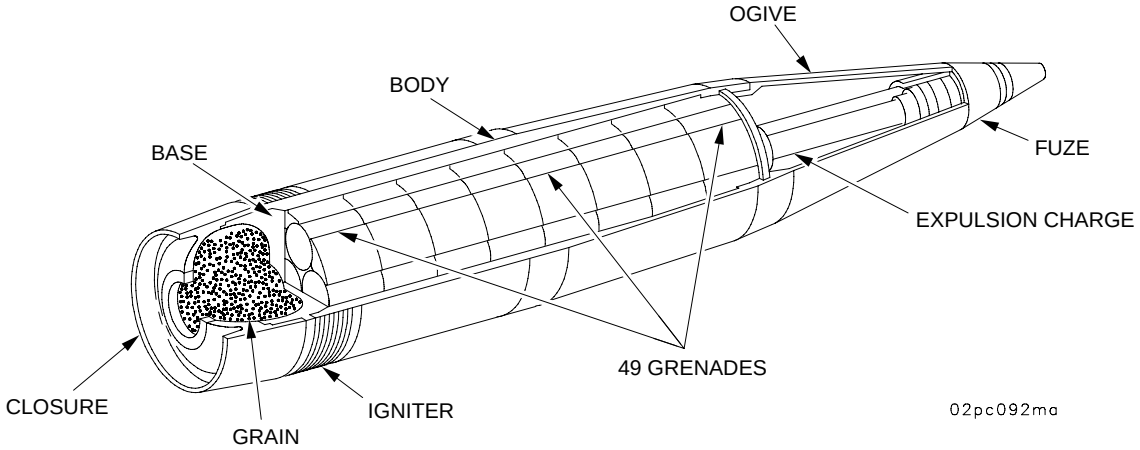

## 6-2 AUTHORIZED PROJECTILES - CONTINUED

(12) Projectile, 155-mm, SMArt, DM702/DM702A1 (GE). This projectile is a 155-mm fire-and-forget, top attack, counter-fire munition. There are two sensor fuzed munitions (SFM) packaged in the projectile. The SFM are ejected out of the base of the projectile using a fuze initiated expulsion charge located in the forward end of the round. Millimeter-wave radar and infrared sensors locate targets and provide counter-measure resistance. The warhead is an explosively formed penetrator designed for top-attack of the self-propelled howitzers and armored combat vehicles. Firing solution for the DM702/DM702A1 exist in AFATAD.

**NOTE**

- The SMArt, DM702/DM702A1 projectile comes pre-fuzed with the DM52 fuze. The DM52 fuze must be replaced with the M762A1 fuze prior to firing. It must also be fired with charge M232 MACS-Zone 3-5 and the M82 primer when fired from a US weapon. The DM52 fuze removed from the DM702/DM702A1 should be packed in a M2A1 container and sent back to the ASP for destruction.
- The SMArt DM702/DM702A1 is not safety certified to be transported in the M109A6 weapon prefuzed. Therefore, the projectile should not be unpacked or fuzed with the M762A1 fuze and loaded onto the weapon until a fire mission is called to fire the DM702/DM702A1 projectile. In the event a M762A1 fuze is placed on a DM702/DM702A1 projectile and not fired, the projectile should be refuzed with the DM52 fuze prior to repacking the projectile in its container.

Characteristics: Number of Submunitions: 2

Submunitions Footrprint radius: DM702 70m, DM702A1 105m

Optimal altitude: DM702 100m, DM702A1 150m

02pc422m

## SECTION III. FUZES

### 6-3 AUTHORIZED FUZES.

**WARNING**

Premature functioning can occur when DM211, DM241, and M557C1 fuzes are fired in heavy rainfall resulting in serious injury or death.

a. Fuze, Point-Detonating, DM211 (GE, NO). The DM211 has a superquick (SQ) element in the head consisting of a firing pin, firing pin support, and detonator. The fuze body contains a delay plunger assembly and a selective setting device for superquick or delay action. The DM211 is similar to the U.S. fuze M557.

DM211 FUZE

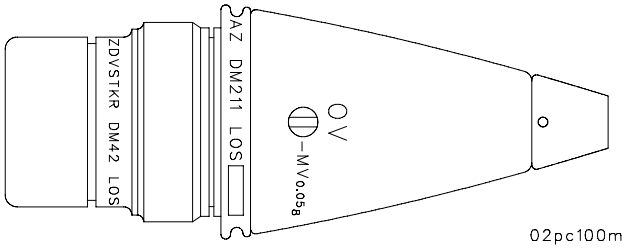


b. Fuze, Point-Detonating, DM241 (GE). Fuze DM241 consists essentially of Fuze DM211 modified with an epoxy filler in the ogive cavity for reinforcement. A superquick (SQ) element in the head consists of a firing pin, firing pin support, and detonator. The body of the fuze is epoxy-filled within the thin-walled ogive. The fuze body contains a delay plunger assembly and a selective setting device for superquick or delay action. The delay plunger assembly includes a firing pin and delay element consisting of a primer, black powder delay charge, and a relay. The DM42 booster consists of a brass booster body having external threads to fit projectiles having 2 in. (51 mm) diameter, 12 threads per inch cavities, and internal threads to receive fuzes having 1.7 in. (43 mm), 14 threads per inch. An aluminum booster cup containing a tetryl booster pellet is threaded to the booster body. The DM42 booster internal configuration is that of an eccentric rotor containing a detonator help in an unarmed (out of line) position by centrifugal detentes and a gear train mechanism which provides a delayed arming of the booster assembly until the projectile is approximately 72.6 yd (66 m) from the muzzle, depending upon the weapons and charge being fired.

DM241

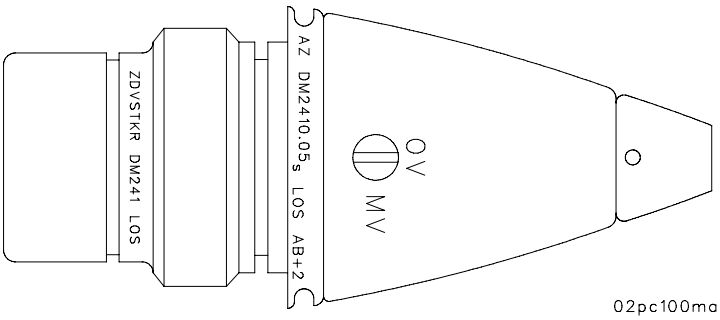

## 6-3 AUTHORIZED FUZES - CONTINUED

### NOTE

The fuze M557C1 is a U.S. M557 fuze with booster M125C1 of Italian manufacture. This booster is the same design as the U.S. M125A1 except it is fitted with a setback pin which locks one of the spin locks.

c. Fuze, Point-Detonating, M557C1 (NL). The M557C1 fuze is a selective superquick or 0.05-second delay impact fuze. The M557C1 fuze is a U.S. M557 fuze with booster M125C1 of Italian manufacture. This booster is the same design as the U.S. M125A1 except that it is fitted with a setback pin which locks one of the spin locks.

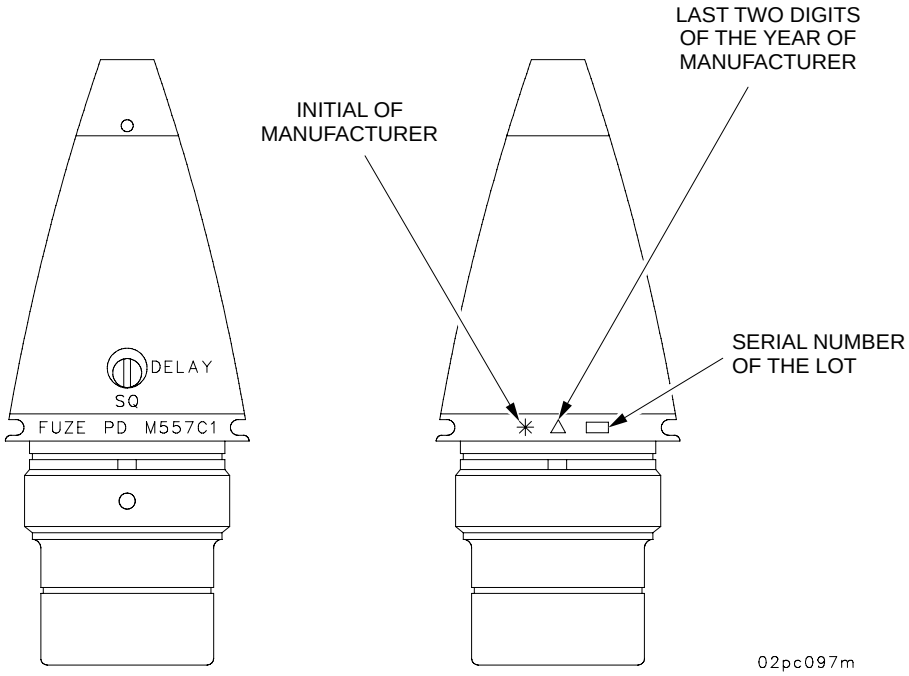


M557C1 FUZE

## 6-3 AUTHORIZED FUZES - CONTINUED

**WARNING**

L85A2, L106 series, and L112A fuzes should not be power rammed. Failure to comply with this warning could result in serious injury or death.

d. Fuze, Point-Detonating, Nose Percussion L85A1 and L85A2 (UK). The fuze L85 is identical to the M557, except that it is fitted with a Gaine* L7 in place of the booster M125 and there is CE stemming over a diaphragm in place of the closing cup lead charge used in the booster. The optional delay is between 0.02 and 0.03 seconds. Some of the components associated with the initiating train are made of aluminum or are nickel plated, while others are of brass. Model No. L85A2 has a steel body with the detonator consisting of 1.05 gr primer mixture (potassium chlorate)/0.285 gr lead azide. The Gaine used is the L7A2 with a detonator containing 1.25 gr CE and 3.55 gr lead azide and a magazine filling of CE. The Gaine L7A2 has an anti-roll setback detonate to prevent arming if the Gaine is rolled.

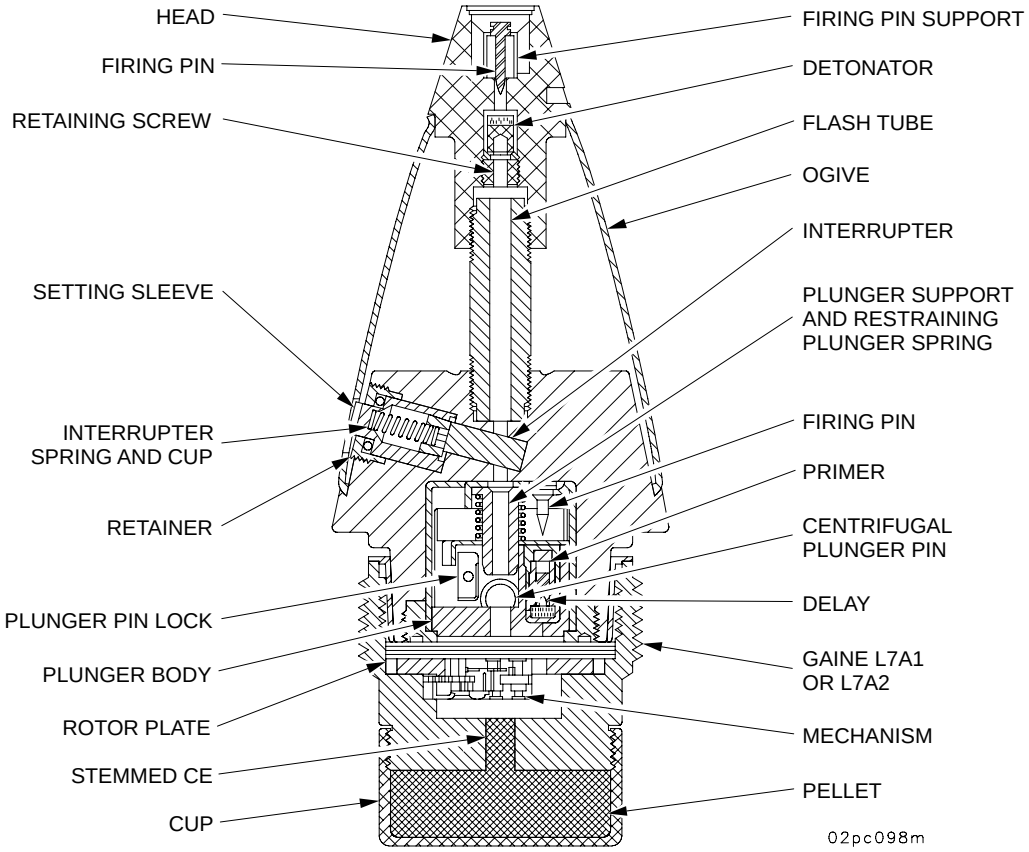


(1) The fuze L85A2 differs from the fuze L85A1 in the following respects:

(a) The burning time of the delay is reduced from 0.05 seconds to 0.025 seconds.

(b) The ogive cone is approximately 50 percent thicker.

(c) Components of the head assembly have been subjected to change of material to minimize corrosion.

(d) Components of the body assembly have been nickel plated to minimize corrosion.

*Gaine-An explosive train arranged to achieve, maintain, or enhance detonation.

## 6-3 AUTHORIZED FUZES - CONTINUED

(e) Gaine L7A2 replaces booster M125.

(2) Gaine L7A2 differs from Gaine L7A1 in the following respects:

(a) To remove the risk of arming by rolling, the Gaine L7A2 has a spring loaded axial detent fitted which engages a hole in one of the two rotor detentes.

(b) The Gaine L7A2 has the top surface of its rotor fitted with a spring-loaded rotor lock pin which engages a hole in the cover plate when the rotor rotates to the armed position.

**NOTE**

Fuzes L106A1/A2 are not to be fired at charge temperature > 125°F (52°C).

e. Fuze, Point-Detonating, L106A1 and L106A2 (UK). The fuze L106A1/A2 is a direct action and graze fuze which can be set for delay or superquick action. It consists of a nose cap, body assembly, hammer and guide, percussion and graze mechanisms inertia pellet, delay holder, No. 2/3 delayed arming unit and magazine assembly with adapter and cap.

The L106A2 differs from the L106A1 by the incorporation of a strengthened nose, revised number, and an improved hammer guide setting of “D” differs from “SQ” only in that the flash from the detonator in the inertia pellet is diverted through two side channels leading to the delay compositions in the delay holders.

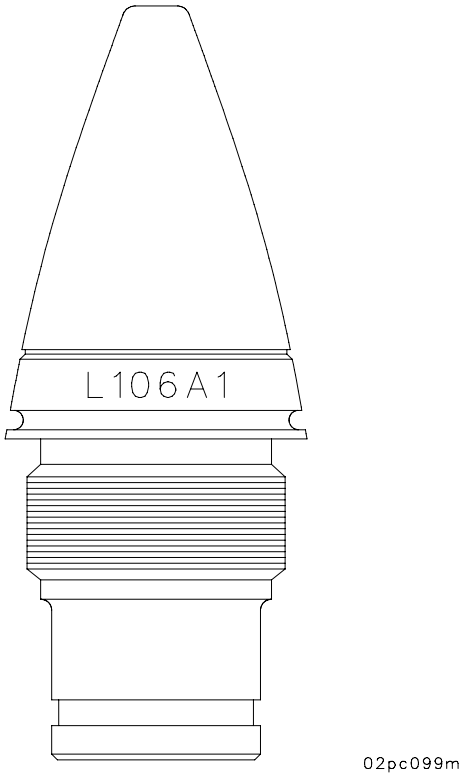


**NOTE**

The fuse could be L106A1 or L106A2. L106A1 is shown.

## 6-3 AUTHORIZED FUZES - CONTINUED

### NOTE

Fuze L112A1 is not to be fired outside of temperature limits -23.8°F (-31°C) and 133°F (56°C). Not to be stored or transported between -24°F (-31°C) and 115°F (46°C).

Fuze L112A1 is not to be fired in projectile M107 filled comp B. Not to be left in hot gases 240°F (115°C).

f. Fuze, Point-Detonating, Nose Percussion, L112A1 (UK). The fuze L112A1 is similar to the fuze nose percussion PD L85A2. They differ mainly in that the L112A1 is structurally reinforced by filling the ogive cavity with epoxy to withstand increased ballistic stresses encountered at high charges. The L112A1 has a steel body and a detonator containing 1.05 gr primer mixture (potassium chlorate) and 0.285 gr lead azide. The charge used in the L112A1 is L7A2 with a detonator containing 1.25 gr CE and 3.55 gr lead azide and magazine filling GE.

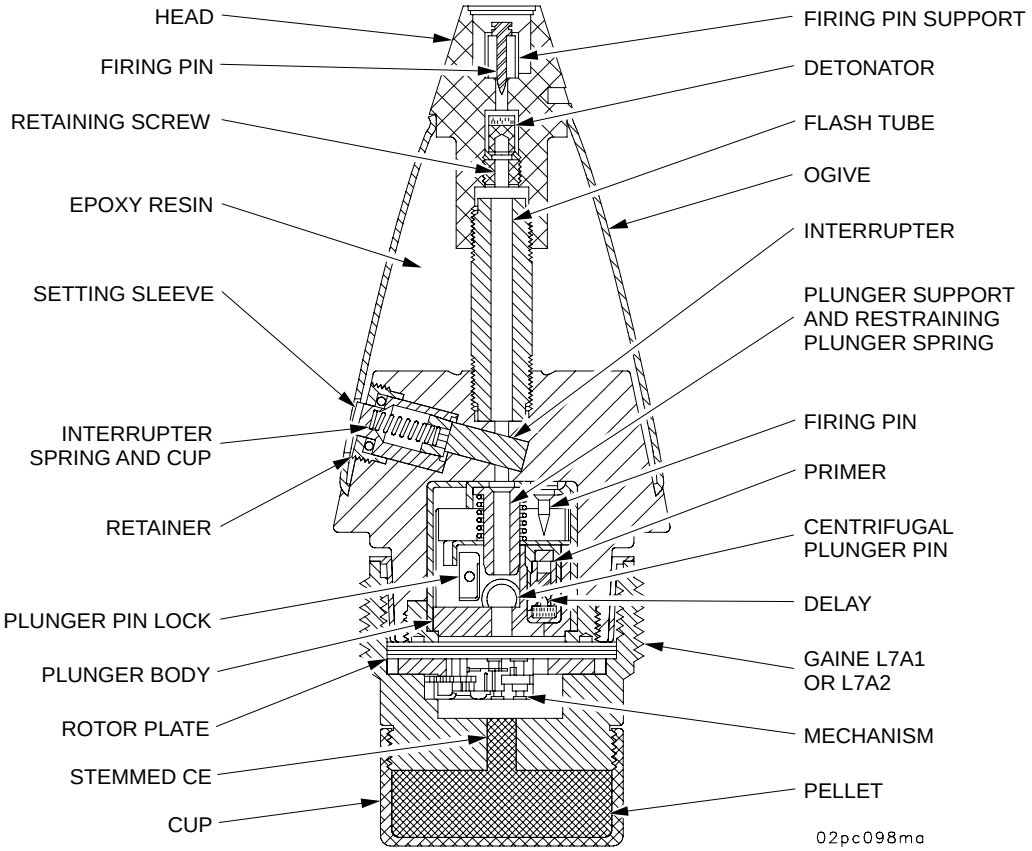

## 6-3 AUTHORIZED FUZES - CONTINUED

g. Fuze, MTSQ: DM143 (GE). The artillery MTSQ-fuze is a mechanical clockwork fuze. Connecting dimensions of this fuze are the same as MTSQ M501. Range application: Time mode with running times between 2 and 150 seconds or PD-mode. Time setting is performed by turning the central section of the fuze with the special fuze setting tool. If the fuze hits a hard target before the set time has elapsed, the PD-mode will override the time mode. No setting will be required for firing the fuze in the PD-mode since it is set to PD prior to delivery. The DM143 uses the DM42A1 booster.

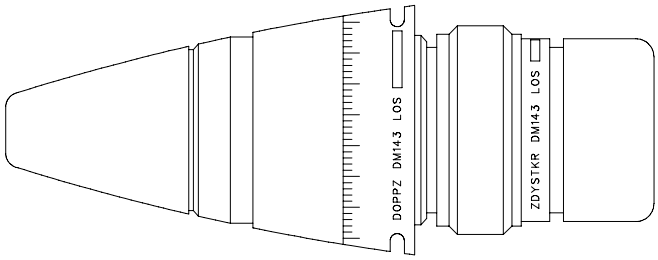


02pc093m

h. Fuze, MTSQ: DM153 (GE). The artillery MTSQ-fuze is a mechanical clockwork fuze. Connecting dimensions of this fuze are the same as the MTSQ M577 and M564. The 1.7 in. (4.3 cm) UNS-1A connecting thread is accessible when removing the threaded adapter. Range of application: Time mode with running times between 2 and 150 seconds or PD-mode. Time setting is performed by turning the central section of the fuze with the special fuze setting tool.

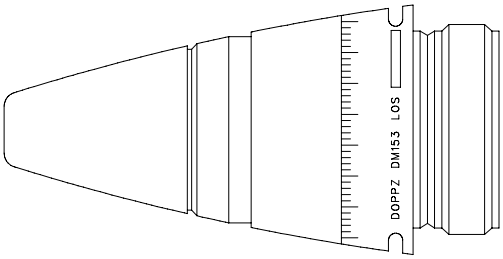


02pc093ma

i. Fuze, MTSQ: DM163 (GE). The artillery MTSQ-fuze is a mechanical clockwork fuze. Connecting dimensions of this fuze are the same as MTSQ M577 and M564. The 1.7 in. (4.3 cm) UNS-1A connecting thread is accessible when removing the threaded adapter. Range of application: Time mode with running times between 2 and 150 seconds or PD-mode. Time setting is performed by turning the central section of the fuze with the special fuze setting tools.

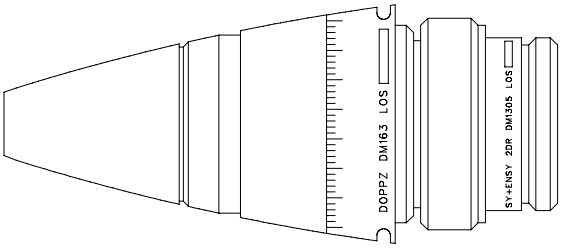


02pc094m

## 6-3 AUTHORIZED FUZES - CONTINUED

j. Fuze Proximity: FS375B (IT). The FB375B proximity fuze is authorized for use on all IT 155mm HE projectiles including “Base Burn”. It has an intrusion of 2.2 in. A setting sleeve, manually operated, allows the selection of one of the two operating modes: Proximity + PD backup or PD only. Proximity operating is based on RF Doppler techniques. Special design techniques take care of different soil reflectivity as well as different angles of approach in order to keep burst height independent of the above parameters. It is used against ground personnel and material targets.

k. Fuze, Proximity: DM34 (GE). This fuze is a proximity fuze with a PD backup. The fuze can be mechanically switched to provide a PD function with or without a delay of 10 ms.

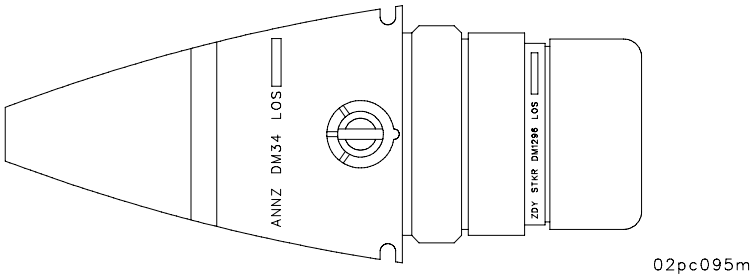


l. Fuze, ETSQ: DM52 (GE). The artillery ETSQ fuze is an inductive electronic time fuze. Connecting dimensions of this fuze are the same as the MTSQ DM163 on the M762 fuzes and is an alternative to any of their applications. It is not only capable of hand setting with a special fuze setter, but can also be set by a programmable inductive fuze setter. It has a digital display and is operated by a lithium primary battery.

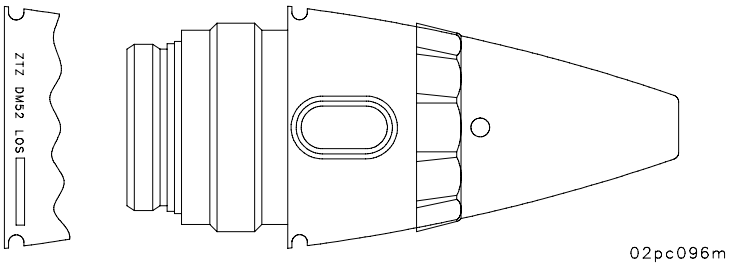

## Section IV. PROPELLING CHARGES

### 6-4 PROPELLING CHARGES.

a. Propelling Charge, DM62 (GE). This is a green bag charge consisting of a base charge and four unequal increments loaded in cloth bags for firing in zones 1 through 5. The bags are fastened together with four cloth straps sewn to the base and tied on top of Increment No. 5. The clean-burning igniter in a red or brown cloth bag is sewn to the rear of the base charge.

DM62 CHARGE

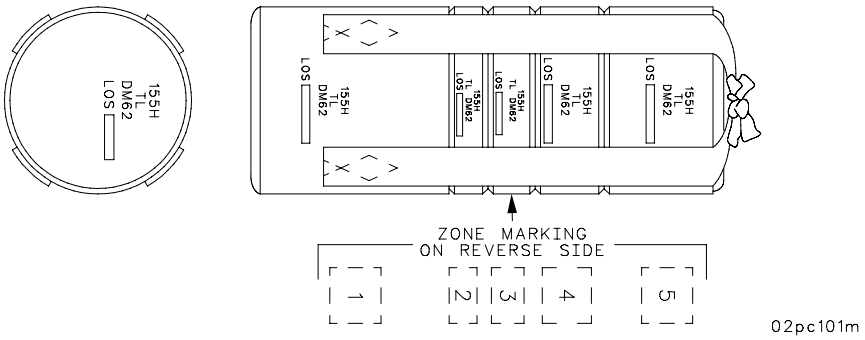


b. Propelling Charge, DM42B1 (GE). This is a white bag charge consisting of a base charge and four unequal increments loaded in cloth bags for firing in zones 3, 4, 5, 6, and 7. The increments are connected by four cloth tapes sewn to the base and tied on top of increment No. 7. The clean burning igniter in a red or brown cloth pad is sewn to the bottom of the base charge. A flash reducer pad is assembled at the front end of the base charge.

DM42B1 CHARGE

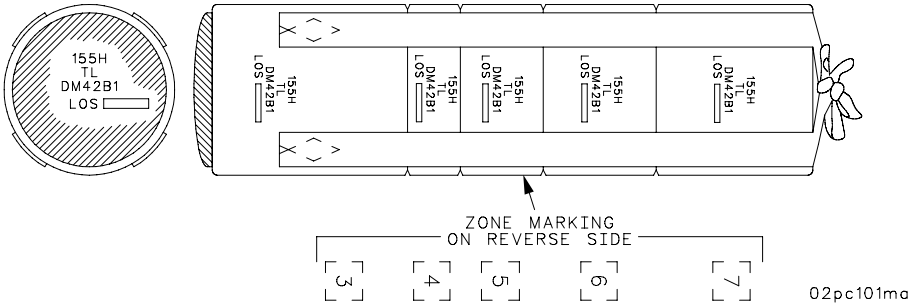

## 6-4 PROPELLING CHARGES - CONTINUED

c. Propelling Charge, M3C1 (NL). This is a green charge consisting of a base charge and four unequal increments loaded in cloth bags for firing in zones 1 through 5. The bags are fastened together with four cloth straps sewn to the base and ties on top of Increment No. 5. It has a flash reducer pad forward the base charge and two flash reducer pads forward Increments 4 and 5. The clean-burning igniter, in a red cloth bag, is sewn to the rear of the base charge.

M3C1 CHARGE

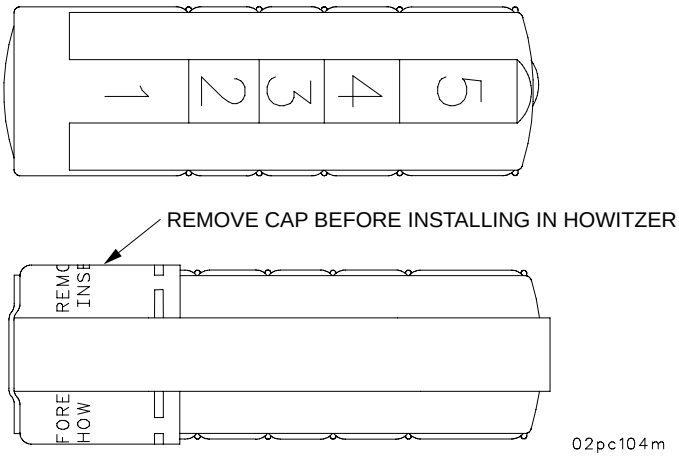


**NOTE**

Lot number of assembled propellant charge is shown on the ground charge and all supplement charges.

d. Propelling Charge, M4C3 (NL). This is a white bag charge consisting of a base charge and four unequal increments loaded into cloth bags for firing in zones 3, 4, 5, 6, and 7. The increments are connected by four cloth tapes sewn to the base and ties on top of Increment 7. The clean-burning igniter in a red cloth pad is sewn to the bottom of the base charge (Increment 3). A flash reducer pad is assembled at the front end of the base charge (Increment 3).

M4C3 CHARGE

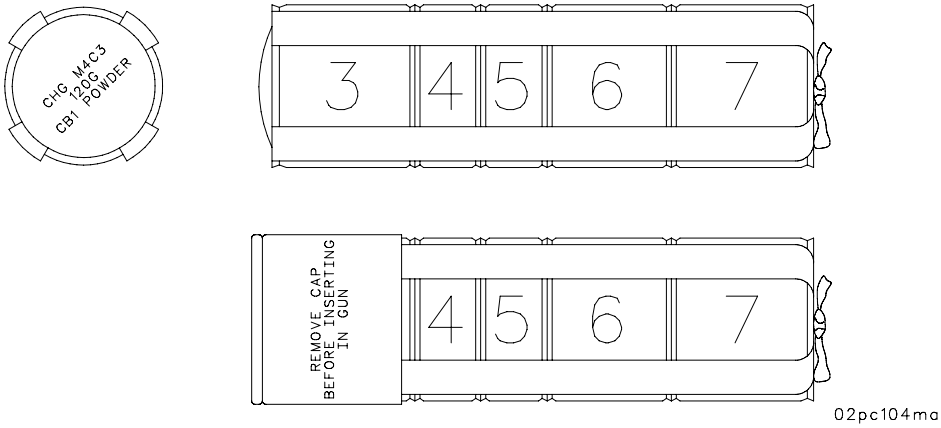

## 6-4 PROPELLING CHARGES - CONTINUED

**WARNING**

- L8A1 can only be fired above charge 7 with U.S. M549A1 HERA and M825, Smk, WP and M864 HEDPICM-BB projectiles. Failure to comply with this warning could result in serious injury or death.
- Charge, propelling L8A1, (Zone 7), L10A1 (Zone 8) not to be fired in the M109A2/A3/A4 howitzer. Failure to comply with this warning could result in serious injury or death.

**NOTE**

Charges, propelling L8A1 and L10A1 use DM191A1 primer

## 6-4 PROPELLING CHARGES - CONTINUED

e. Charge, Propelling, 155mm, L8A1, Cartridge 2 (GE, IT, and UK). Cartridge 2 contains approximately 17.2 lb (7.8 kg) of propellant in five increments. All increments are encased in a light blue combustible cloth sack that is held closed by a velcro strap. This outer bag has a bright red igniter pad sewn into it that contains 2.8 oz (80 g) of NC/200 propellant and 0.6 oz (17 g) of G20 powder. All five increments, labeled charge 3 through 7 are individually wrapped and color coded.

Charge 3 consists of approximately 3.1 lb (1.4 kg) of K06 stick propellant divided into two equal bundles and sealed in a gray cloth bag.

Charge 4 contains approximately 1.3 lb (0.6 kg) of NO6 stick propellant sealed in an orange colored cloth bag.

Charge 5 is approximately 1.3 lb (0.6 kg) of N/S 33-10 propellant wrapped in lead foil and sealed in a green cloth bag. In the center of this charge is a cotton bag filled with inhibitor containing 25.4 oz (720 g) of potassium sulfate with calcium phosphate added.

Charge 6 consists approximately 3.3 lb (1.5 kg) of N/S 33-10 stick propellant divided into three equal bundles, each of which is rapped in lead foil and sealed in a beige colored cloth bag.

The lead foil wrapping is used in charges 6, 6 and 7 to prevent copper build-up in the tube of the weapon. The flash inhibitor in charge 5 limits breach flareback as well as muzzle flash and blast overpressure.

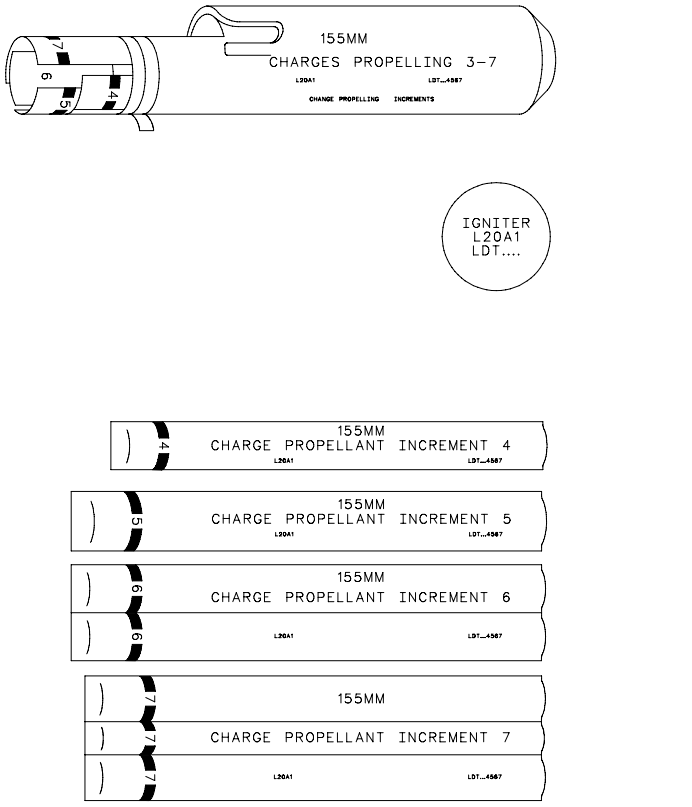


02pc105m

## 6-4 PROPELLING CHARGES - CONTINUED

**WARNING**

L10A1 can only be fired in the M284 cannon with the M549A1, HERA and M825, SmK, WP projectiles. Failure to comply with this warning could result in serious injury or death.

f. Charge, Propelling, 155mm L10A1, Cartridge. Cartridge 3 consists of a single increment, rigid combustible case charge, containing approximately 27.9 lb (12.7 kg) of NBQ/sP/S stick propellant. The rear section (cap end) contains a bright red igniter bag with 2.4 oz (68 g) of NC/200 propellant and 0.6 oz (17 g) of G20 powder. In the forward end, the propellant is sheathed in lead foil to reduce coppering in the gun tube.

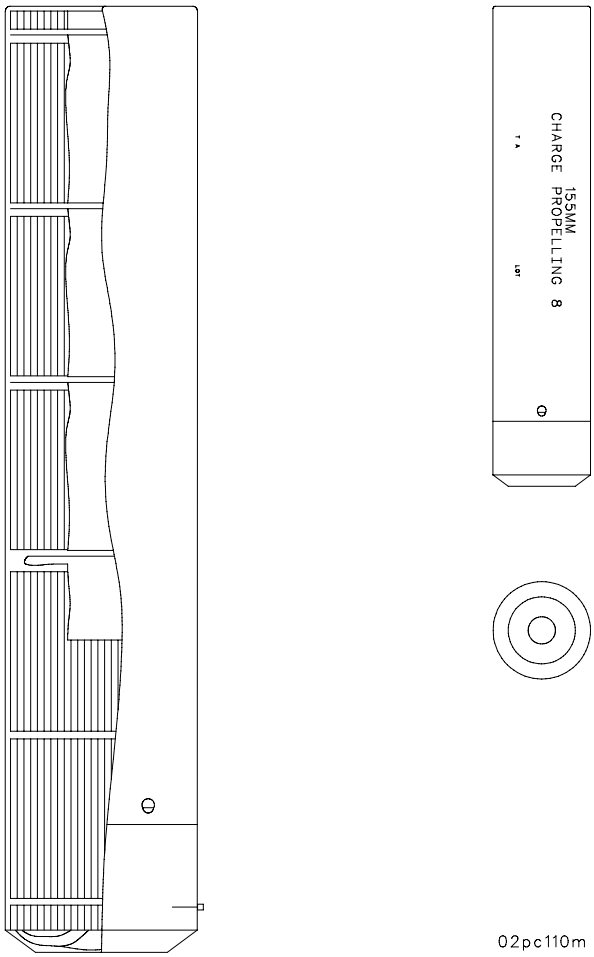

# APPENDIX A
# REFERENCES

## A-1 SCOPE.

This appendix lists all forms, field manuals, technical bulletins, and technical manuals referenced in this manual.

## A-2 FORMS.

Recommended Changes to Publications and Blank Forms . . . . . DA Form 2028
Hand Receipt . . . . . DA Form 2062
Equipment Inspection and Maintenance Worksheet . . . . . DA Form 2404
Maintenance Request . . . . . DA Form 2407
Weapons Record Data . . . . . DA Form 2408-4
Equipment Inspection and Maintenance Worksheet . . . . . DA Form 5988-E
Product Quality Deficiency Report . . . . . SF Form 368

## A-3 FIELD MANUALS.

NBC Contamination Avoidance . . . . . FM 3-3 (Superseded by FM 3-11.3)
NBC Protection . . . . . FM 3-4 (Superseded by FM 3-11.4)
NBC Decontamination . . . . . FM 3-5 (Superseded by FM 3-11.5)
Field Artillery Gunnery (Cannon) . . . . . FM 6-40
Field Artillery Cannon Battery . . . . . FM 6-50
Operations and Maintenance of Ordnance Materiel in Cold Weather . . . . . FM 9-207
First Aid for Soldiers . . . . . FM 4-25.11
Driver Selection, Training, and Supervision, Tracked Combat Vehicles . . . . . FM 21-17
Manual for Tracked Combat Vehicle Driver . . . . . FM 21-306
Basic Cold Weather Manual . . . . . FM 31-70

## A-4 TECHNICAL BULLETINS.

Occupational and Environmental, Health, Hearing Conservation . . . . . PAM 40-501
Munitions: Suspended or Restricted . . . . . TB 9-1300-385
Additional Vehicle Armor . . . . . TB 9-2350-314-10
Warranty Program for Paladin Digital Fire Control System (PDFCS) . . . . . TB 9-2350-314-20-2-3

## A-5 TECHNICAL MANUALS.

Operator's Manual for Decontamination Kit, Individual Equipment: M295 . . . . . TM 3-4230-235-10
Operator's Manual for Projectile 155MM, GB2, M687 . . . . . TM 3-1320-242-10
Operator's and Organizational Maintenance Manual Including Repair Parts and Special Tools List for Decontaminating Apparatus, Portable, 14 Liter, M13 . . . . . TM 3-4230-214-12&P
Operator's Manual for Decontaminating Kit, Skin: M258A1 (NSN 4230-01-101-3984) and Training Aid Skin Decontaminating: M58A1 (6910-01-101-1768) . . . . . TM 3-4230-216-10
Operator's Manual for Mask, Chemical-Biological: Aircraft, ABC-M24 and Accessories and Mask, Chemical-Biological, Tank, M25A1 and Accessories (Reprinted w/Basic Incl C1-2) . . . . . TM 3-4240-280-10

## A-5 TECHNICAL MANUALS - CONTINUED

Operator's and Direct Support Maintenance Manual Including Repair Parts and Special Tools List, Chemical Agent Monitoring System (CAM) (NSN 6665-01-199-4153) . . . TM 3-6665-327-13&P
Evaluation of Cannon Tubes . . . . . TM 9-1000-202-14
Operator's Manual: Machine Gun, Cal. .50, Browning, M2, Heavy Barrel . . . . . TM 9-1005-213-10
Organizational and Direct Support Maintenance Manual Including Repair Parts and Special Tools List for Extractor Assembly (1025-01-082-3586) . . . . TM 9-1025-212-23&P
Unit, Direct Support and General Support Maintenance Manual Including Repair Parts and Special Tools List Through Depot Level for Muzzle Velocity System, M93 . TM 9-1290-365-24&P
Ammunition and Explosives Standards . . . . . TM 9-1300-206
Operator's Manual: (Hand Receipt), Howitzer, Medium, Self-Propelled 155MM M109A6 . . . . . TM 9-2350-314-10-HR
General Maintenance Procedures for Fire Control Materiel . . . . . TM 9-254
Operator's, Organizational, DS and GS Maintenance Manual for Lead-Acid Storage Batteries . . . . . TM 9-6140-200-14
Unit Maintenance Manual, Artillery Ammunition for Guns, Howitzers, Mortars, Recoilless Rifles, and 40mm Grenade Launchers . . . . . TM 9-1300-251-20&P
Direct Support and General Support, Artillery Ammunition for Guns, Howitzers, Mortars, Recoilless Rifles and 40mm Grenade Launchers . . . . . TM 9-1300-251-34&P
Mounted Water Ration Heater . . . . . TM 10-7310-241-12&P
Interphone Controls C-980/U and C-981/U and Intercommunication Set Controls C-980A/U . . . . . TM 11-206
Maintenance Manual: Radio Set AN/VRC-89 . . . . . TM 11-5820-890-10
Operator's Manual: Radio Set AN/VRC-89 . . . . . TM 11-5820-890-10-1
Operator's Manual: Radio Set AN/VRC-89 (Pocket Size) . . . . . TM 11-5820-890-10-2
Operator's and Maintenance Manual for Defense Advanced GPS Receiver (DAGR) Satellite Signals Navigation Set AN/PSN-13, AN/PSN-13A . . . . . TM 11-5820-1172-13
Satellite Signals Navigation Set AN/PSN-11 . . . . . TM 11-5825-291-13
Operator's and Maintenance Manual for Precision Lightweight GPS Receiver, PLGR + 96 AN/PSN-11(V)1 . . . . . TM 11-5825-291-13-1
Operator's and Unit Maintenance Manual, Vehicular Intercommunications Systems AN/VIC-3(V)-1 (NSN 5830-01-395-4177), AN/VIC-3(V)-2 (NSN 5830-01-395-7448), AN/VIC-3(V)-3 (NSN 5830-01-395-4091), AN/VIC-3(V)-4 (NSN 5830-01-395-4090), AN/VIC-3(V)-5 (NSN 5830-01-395-4092), AN/VIC-3(V)-6 (NSN 5830-01-395-4093), AN/VIC-3(V)-7 (NSN 5830-01-399-1892), AN/VIC-3(V)-8 (NSN 5830-01-399-1893) . . . . . TM 11-5830-263-10
Operator's and Organizational Maintenance Manual: Intercommunications Set AN/VIC-1(V) . . . . . TM 11-5830-340-12
Operator's Manual for Viewers, Driver's Night Vision . . . . . TM 11-5855-249-10
Army Ammunition Data Sheets for Artillery Ammunition: Guns, Howitzers, Mortars, Recoilless Rifles and Grenade Launchers . . . . . TM 43-0001-28
Army Ammunitions: Cartridge/Projectile Fuse and Propelling Charges Combination Charts . . . . . TM 43-0001-28-2
Procedures for Destruction of Equipment to Prevent Enemy Use . . . . . TM 750-244-6
Operator and Field Maintenance Manual (Including Repair Parts and Special Tools Lists) for Fuze Setter Enhanced, Portable, Inductive, Artillery (EPIAFS), M115A1 (NSN 1290-01-536-5650), PN 13015264 . . . . . TM 9-1290-211-13&P

## A-6 MISCELLANEOUS PUBLICATIONS.

Malfunctions Involving Ammunition and Explosives . . . . . AR 75-1
Accident Reporting and Records . . . . . AR 385-40
Regulations for Firing Ammunition for Training, Target Practice, and Combat . . . . . AR 385-63
Army Medical Department Expendable/Durable Items . . . . . CTA 8-100
Expendable Items (Except Medical Class V Repair Parts and Heraldic Items) . . . . . CTA 50-970

## A-6 MISCELLANEOUS PUBLICATIONS - CONTINUED

| | |
|---|---|
| Consolidated Index of Army Publications and Blank Forms | DA PAM 25-30 |
| The Army Maintenance Management System (TAMMS) | DA PAM 750-8 |
| Grease, Automotive and Artillery | MIL-PRF-10924 |
| Grease, Molybdenum Disulfide | MIL-G-21164 |
| Grease, General Purpose | MIL-G-23549 |
| Grease, Aircraft and Instrument | MIL-G-23827 |
| Hydraulic Fluid, Petroleum Base, Aircraft Missile and Ordnance | MIL-H-5606 |
| Hydraulic Fluid, Petroleum Base, Preservative, Hydraulic Equipment | MIL-PRF-6083 |
| Lubricating Oil, ICE, Tactical Service | MIL-PRF-2104 |
| Lubricating Oil, Gear, Multi-Purpose | MIL-PRF-2105 |
| Lubricating Oil, Internal Combustion Engine, Arctic | MIL-L-46167 |
| Cleaner, Lubricant, Preservative | MIL-L-63460 |
| Chemical Conversion Materials for Coating Aluminum and Aluminum Alloys | MIL-DTL-81706 |

# APPENDIX B

# COMPONENTS OF END ITEM (COEI) AND BASIC ISSUE ITEMS (BII) LISTS

## Section I. INTRODUCTION

### B-1 SCOPE.

This appendix lists components of the end item and basic issue items for the M109A6 howitzer to help you inventory the items for safe and efficient operation of the equipment.

### B-2 GENERAL.

The Components of End Item (COEI) and Basic Issue Items (BII) Lists are divided into the following sections:

a. Section II. Components of End Item. This listing is for information purposes only, and is not authority to requisition replacements.These items are part of the M109A6, but they are to be removed and separately packaged for transportation or shipment. As part of the end item, these items must be with the end item whenever it is issued or transferred between property accounts. Illustrations are furnished to help you find and identify the items.

b. Section III. Basic Issue Items. These essential items are required to place the M109A6 in operation, operate it, and to do emergency repairs. Although shipped separately packaged, BII must be with the M109A6 during operation and when it is transferred between property accounts. Listing these items is your authority to request/requisition them for replacement based on authorization of the end item by the TOE/MTOE. Illustrations are furnished to help you find and identify the items.

### B-3 EXPLANATION OF COLUMNS.

a. Illustration Item Number--Column 1. Indicates the callout number used to reference the item in the illustration.

b. National Stock Number--Column 2. Indicates the National Stock Number assigned to the item which will be used for requisitioning.

c. Description--Column 3.

(1) Part Number. Description and Usable On Code, identifies the Federal item name followed by a minimum description when needed. The last line below the description is the CAGEC (Commercial And Government Entity Code) (in parentheses) and the part number.

d. Unit of Issue (U/I)--Column 4. This column indicates how the item is issued for the National Stock Number shown in column 2.

e. Quantity Required (Qty. Req'd.)--Column 5. This column lists the quantity of each item required for a complete major item.

## Section II. COMPONENTS OF THE END ITEM

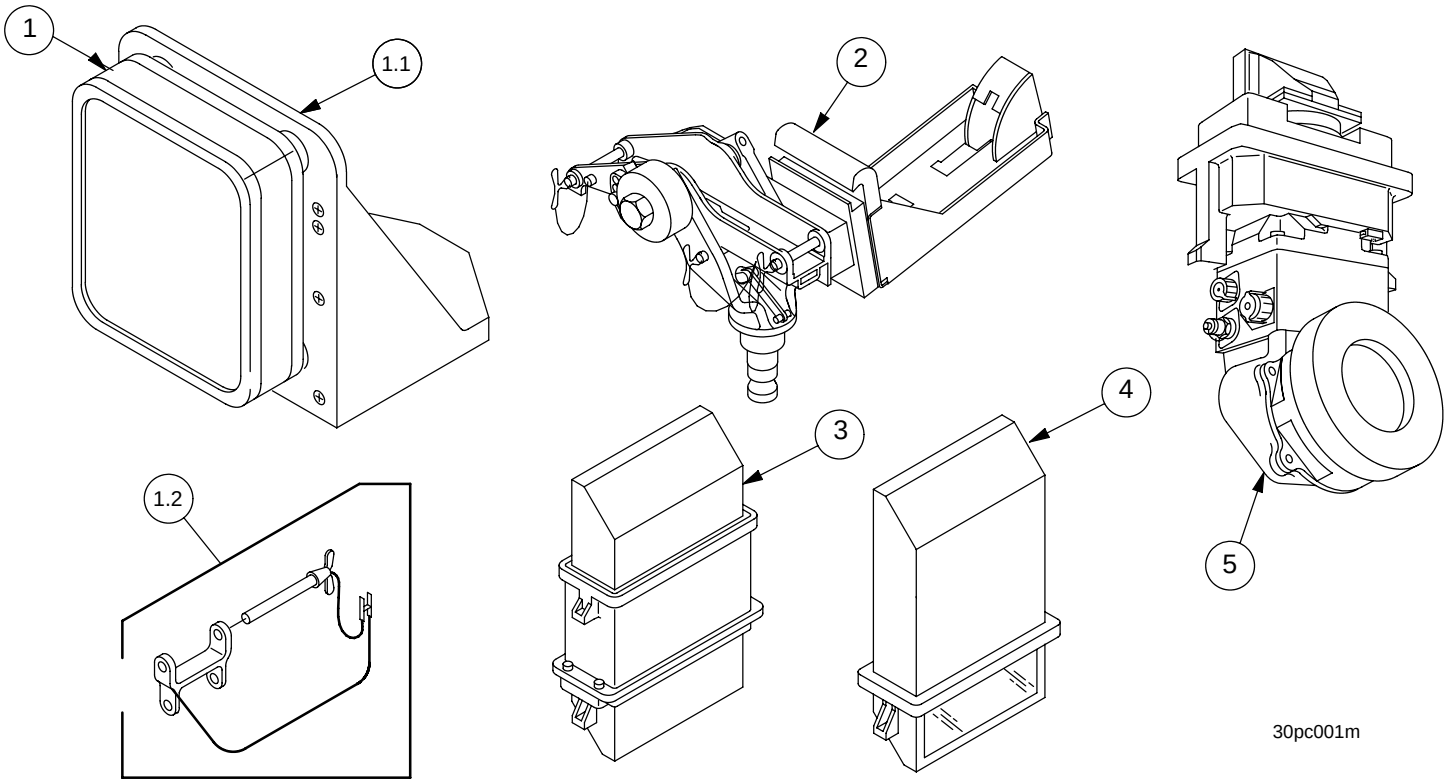


| (1) Illus Number | (2) National Stock Number | (3) Description CAGEC and Part Number | Usable On Code | (4) U/I | (5) Qty Reqd |
|---|---|---|---|---|---|
| 1 | | ANTENNA, PMVS<br>(PDFCS only - right cab wall above PCU-2)<br>(19200) 12999104 | | EA | 1 |
| 1.1 | | BRACKET, ANTENNA, PMVS<br>(PDFCS only - right cab wall above PCU-2)<br>(19200) 12999105 | | EA | 1 |
| 1.2 | 1025-01-202-0418 | ARM, ADAPTER, Machine Gun Mount<br>(in mount on cupola)<br>(19200) 12011777 | | EA | 1 |
| 2 | 1010-01-502-7547 | MOUNT, MACHINE GUN, MK93<br>(in mount on cupola)<br>(19200) 13001175 | | EA | 1 |
| 3 | 6650-01-419-5954 | PERISCOPE, AND SHROUD ASSY<br>(in driver's compartment periscope sleeves)<br>(19200) 12927749 | | EA | 3 |
| 4 | 1240-00-344-4643 | PERISCOPE, M27 (chief of section)<br>(in cupola persicope sleeve)<br>(19200) 7633132 | | EA | 1 |
| 5 | 5855-01-235-5489 | VIEWER, INFRARED, NIGHT DRIVING<br>(in stowage brackets driver's compartment)<br>(54490) 5005820 | | EA | 1 |

## Section II. COMPONENTS OF THE END ITEM - CONTINUED
## ON-BOARD SPARES

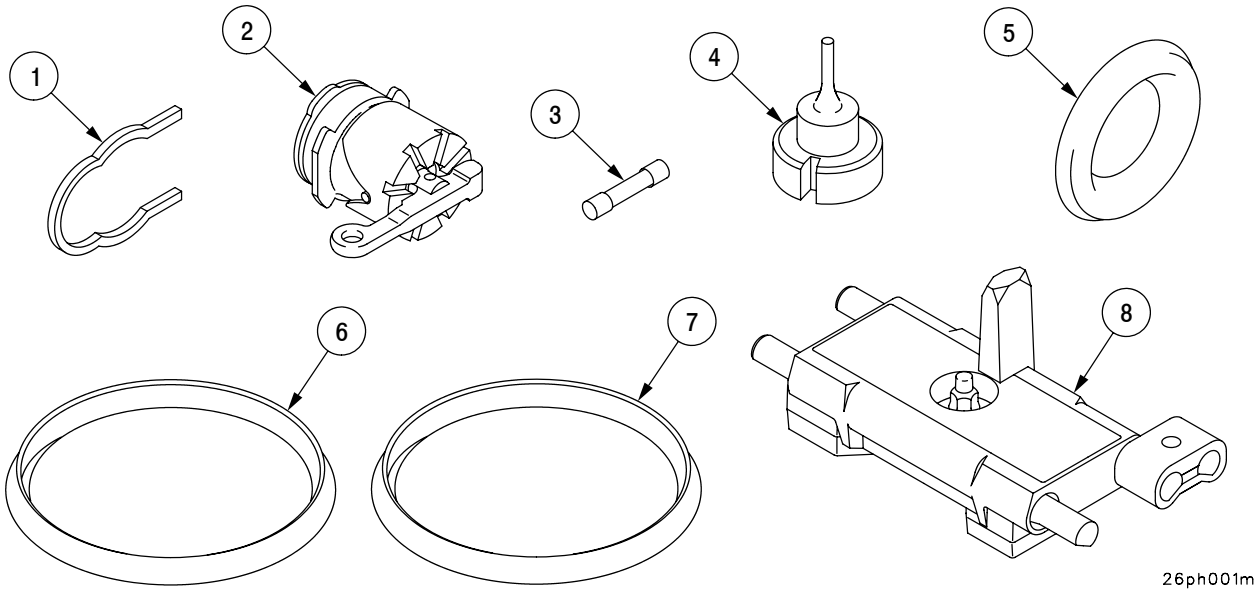


| (1) Illus Number | (2) National Stock Number | (3) Description CAGEC and Part Number | Usable On Code | (4) U/I | (5) Qty Reqd |
|---|---|---|---|---|---|
| *1 | 5340-01-368-9993 | CLIP, RETAINING<br>(cab rear stowage box)<br>(19206) 11580634 | | EA | 5 |
| *2 | 1025-01-292-0960 | FIRING MECHANISM, M49<br>(cab rear stowage box)<br>(19206) 11580122 | | EA | 1 |
| *3 | 5920-00-228-7882 | FUSE, CARTRIDGE<br>(in fuse holder of PLGR mount or DAGR mount<br>(81349) F02B250V2A | | EA | 1 |
| *4 | 1025-00-361-1349 | PIN, FIRING<br>(cab rear stowage box)<br>(19206) 11580504 | | EA | 3 |
| *5 | 1025-01-012-8271 | RING, OBTURATOR, PAD<br>(cab rear stowage box)<br>(19206) 11578862 | | EA | 1 |
| *6 | 5365-00-861-1468 | RING, RETAINING, REAR<br>(cab rear stowage box)<br>(19206) 8767140 | | EA | 1 |
| *7 | 5365-00-861-1467 | RING, RETAINING, FRONT<br>(cab rear stowage box)<br>(19206) 8767139 | | EA | 1 |
| *8 | 2530-01-346-9233 | TRACK SHOE, VEHICULAR<br>(top left front hull, exterior)<br>(19207)12268550-1 | | EA | 4 |

* Designated as on-board spares which must accompany the end item in indicated quantities.

## Section II. COMPONENTS OF THE END ITEM - CONTINUED
## ON-BOARD SPARES - CONTINUED

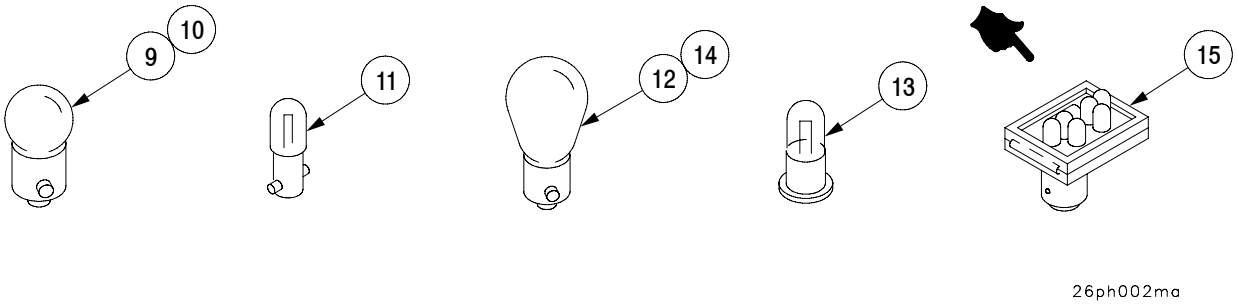


| (1) Illus Number | (2) National Stock Number | (3) Description CAGEC and Part Number | Usable On Code | (4) U/I | (5) Qty Reqd |
|---|---|---|---|---|---|
| *9 | 6240-00-019-0877 | LAMP, INCANDESCENT<br>elec 3cp 24-28V,10<br>No. 1251 (service taillight)<br>(in spare bulb box)<br>(96906) MS15570-1251 | | EA | 2 |
| *10 | 6240-00-019-3093 | LAMP, INCANDESCENT<br>elec 6cp 24-28V, No. 623<br>(in spare bulb box)<br>(dome lights)<br>(96906) MS15570-623 | | EA | 2 |
| *11 | 6240-00-155-8714 | LAMP, INCANDESCENT<br>elec 17 amp 24-28V, No. 313<br>(instrument panel/portable instrument panel/enclosure assembly)<br>(in spare bulb box)<br>(96906) MS25231-313 | | EA | 2 |
| *12 | 6240-00-044-6914 | LAMP, INCANDESCENT No. 1683<br>(in spare bulb box) (service brake light)<br>(96906) MS35478-1683 | | EA | 1 |
| *13 | 6240-00-019-0878 | LAMP, INCANDESCENT elec 3V,<br>No. 323 ( in spare bulb box) (M3 Heater)<br>(81348) W-L-00111/50 | | EA | 2 |
| *14 | 6240-00-295-2668 | LAMP, INCANDESCENT No. 1691<br>(in spare bulb box) (Dome lights)<br>(96906) MS 35478-1691 | | EA | 2 |
| *15 | 6240-01-290-9346 | LIGHT, MARKER, elec 28V<br>(in spare bulb box) (19207) 12360860-2<br>(B.O. marker front) | | EA | 1 |

* Designated as on-board spares which must accompany the end item in indicated quantities.

## Section II. COMPONENTS OF THE END ITEM - CONTINUED
## ON-BOARD SPARES - CONTINUED

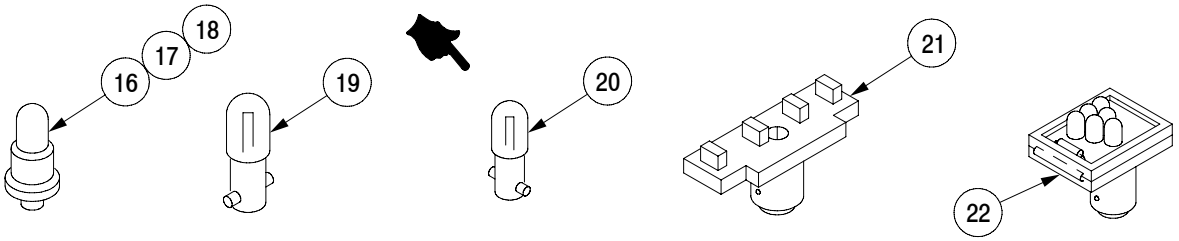


| (1) Illus Number | (2) National Stock Number | (3) Description CAGEC and Part Number | Usable On Code | (4) U/I | (5) Qty Reqd |
|---|---|---|---|---|---|
| *16 | 5980-01-285-6689 | LED, TI-3/4 BASED (red) (in spare bulb box ) (19207) 12360905-1 (voltage regulator control box/hydraulic control box/AFES/ panoramic telescope/accessory control box, brake warning light/gunner's selection switch box) | | EA | 6 |
| *17 | 5980-01-289-5274 | LED, TI-3/4 BASED (yellow) (in spare bulb box) (19207) 12360905-2 (Hydraulic control box/ M145A1 mount/accessory control box) | | EA | 4 |
| *18 | 5980-01-281-5356 | LED, TI-3/4 BASED (green) (in spare bulb box) (19207) 12360905-3 (AFES/travel lock control box) | | EA | 10 |
| *19 | 5980-01-285-6688 | LED, T3-1/4 BASED (red) (in spare bulb box) (19207) 12360890-1 (driver's portable/instrument panel/accessory control box/ crew compartment warning light) | | EA | 4 |
| *20 | 6240-01-284-1925 | LAMP, INCANDESCENT, HALOGEN elec 28V (in spare bulb box) (19207) 12360840-1 (B.O./Drive) | | EA | 1 |
| *21 | 6220-01-284-2709 | LIGHT, MARKER elec 28V (blackout/tail/stop combo) (in spare bulb box (19207) 12360850-1 | | EA | 1 |
| *22 | 6220-01-297-3217 | STOP LIGHT, VEHICULAR (blackout tail and stop combination) (in spare bulb box) (19207) 12360870-2 | | EA | 1 |

* Designated as on-board spares which must accompany the end item in indicated quantities.

## Section III. BASIC ISSUE ITEMS

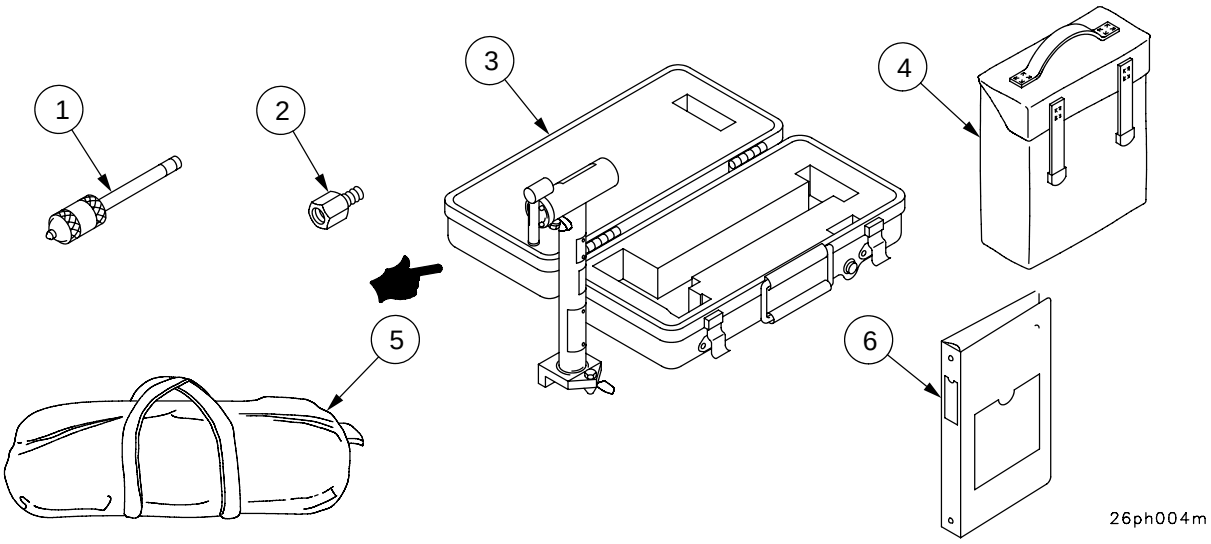


| (1) Illus Number | (2) National Stock Number | (3) Description CAGEC and Part Number | Usable On Code | (4) U/I | (5) Qty Reqd |
|---|---|---|---|---|---|
| 1 | 4930-00-204-2550 | ADAPTER,GREASE GUN, thin stem (in tool bag) (19207)5349744 | | EA | 1 |
| 2 | 4933-00-087-1267 | ADAPTER, GUN, OIL FILLING (in tool bag) (19207) 11635708 | | EA | 1 |
| 3 | 4931-01-472-7329 | ALIGNMENT DEVICE, M140A1 WITH CASE (inside cab side door) (19200) 12984665 | | EA | 1 |
| 4 | 2540-00-670-2459 | BAG ASSEMBLY, PAMPHLET (cab stowage) (19207) 7961712 | | EA | 1 |
| 5 | 5140-00-473-6256 | BAG, TOOL, SATCHEL (in cab rear stowage box) (19207) 11655979 | | EA | 1 |
| 6 | 7510-00-889-3494 | BINDER, LOOSE LEAF (in pamphlet bag) (19207) 11677003 | | EA | 1 |
| | | | | EA | 1 |

## Section III. BASIC ISSUE ITEMS - CONTINUED

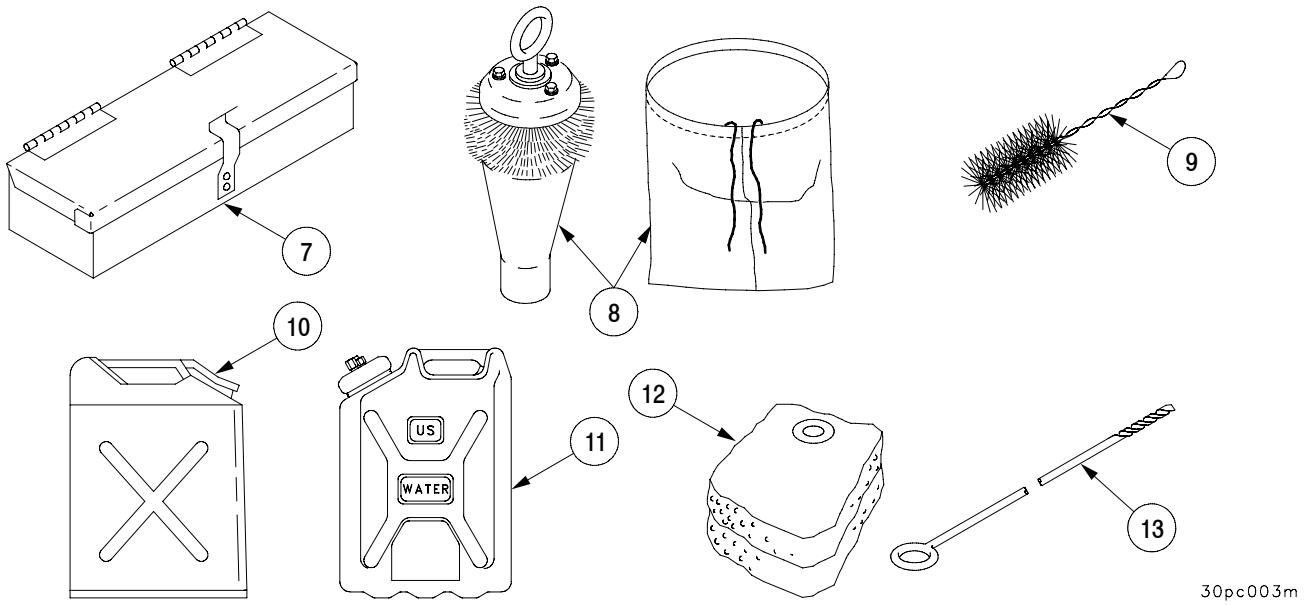


| (1) Illus Number | (2) National Stock Number | (3) Description CAGEC and Part Number | Usable On Code | (4) U/I | (5) Qty Reqd |
|---|---|---|---|---|---|
| 7 | 2540-00-906-4741 | BOX ASSEMBLY, SPARE BULB<br>(in driver's compartment)<br>(19207) 10870949 | | EA | 1 |
| 8 | 1025-01-196-2176 | BRUSH AND BAG ASSEMBLY<br>(in rear stowage box)<br>(27412) 155-110-401 | | EA | 1 |
| 9 | 4933-00-730-7183 | BRUSH, CLEANING, PRIMER<br>(in tool bag)<br>(19206) 7307183 | | PK | 1 |
| 10 | | CAN, FUEL, MIL TYPE 5 GAL.<br>(right front/side cab wall exterior)<br>(81349) (MIL-C-53109) | | EA | 2 |
| | 7240-01-337-5268 | TAN | | | |
| | 7240-01-337-5269 | GREEN | | | |
| 11 | | CAN, WATER MILITARY 5 GAL<br>(on left cab wall exterior )<br>(81349) MIL-C-43613 | | EA | 4 |
| | 7240-00-089-3827 | TAN | | | |
| | 7240-01-365-5317 | GREEN | | | |
| 12 | 1025-01-232-6822 | CHAMBER SWAB, 155 MM<br>(in oddment tray)<br>(27412) 155 CS | | EA | 1 |
| 13 | 4933-00-601-9667 | CLEANING TOOL, VENT<br>(in tool bag)<br>(19206) 6019667 | | EA | 1 |

## Section III. BASIC ISSUE ITEMS - CONTINUED

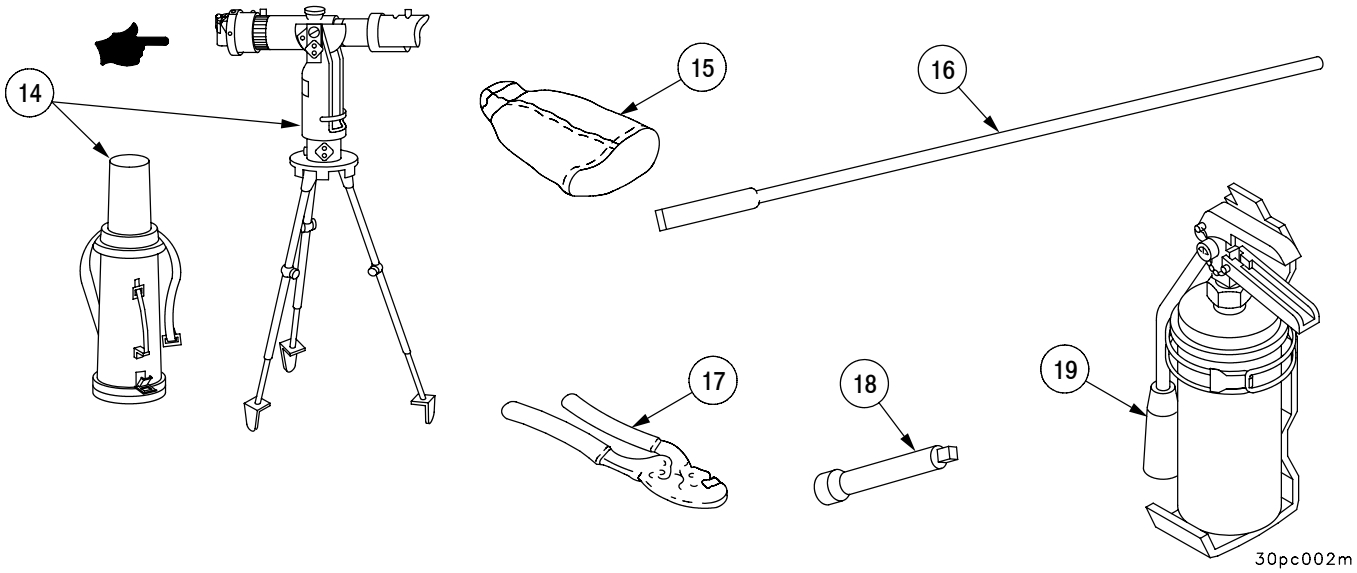


| (1) Illus Number | (2) National Stock Number | (3) Description CAGEC and Part Number | Usable On Code | (4) U/I | (5) Qty Reqd |
|---|---|---|---|---|---|
| 14 | 1240-01-465-5452 | COLLIMATOR, INFINITY AIMING REFERENCE M1A2 (in left exterior stowage basket) (19200) 12984644 | | EA | 1 |
| 15 | 1025-01-054-5781 | COVER, MUZZLE BRAKE, SEWN (on howitzer muzzle brake) (19206) 11579522 | | EA | 1 |
| 16 | 5120-00-224-1390 | CROWBAR, pinch point, 5 ft lg 1-1/4 in. wd (on right cab wall exterior) (80064) 1833244 | | EA | 1 |
| 17 | 5110-00-595-8229 | CUTTER, WIRE ROPE, HAND (in tool bag) (19207) 11655981 | | EA | 1 |
| 18 | 5120-00-243-7326 | EXTENSION, SOCKET WRENCH 1/2 in. dr, 5 in. lg (in tool bag) (80372) 41B311200 | | EA | 1 |
| 19 | 4210-01-388-7854 | EXTINGUISHER, FIRE, PORTABLE, CO2 2.50 lb (hull rear door/front post interior) (58536) A52471-1-S | | EA | 2 |

## Section III. BASIC ISSUE ITEMS - CONTINUED

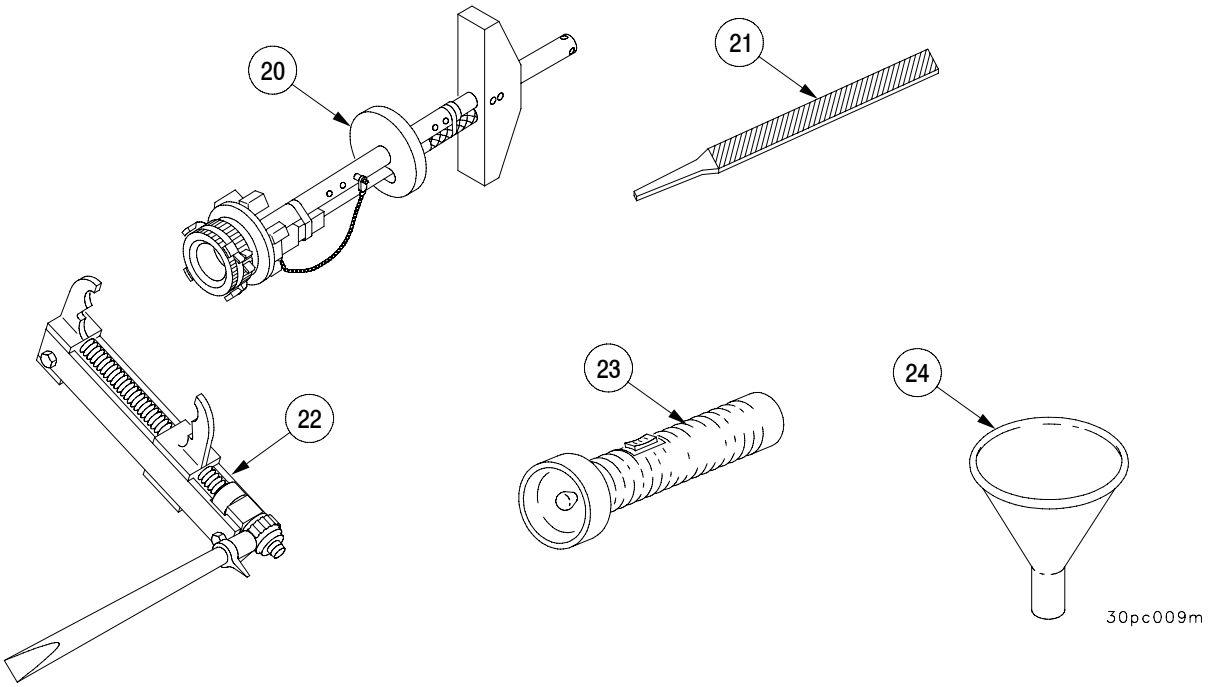


| (1) Illus Number | (2) National Stock Number | (3) Description CAGEC and Part Number | Usable On Code | (4) U/I | (5) Qty Reqd |
|---|---|---|---|---|---|
| 20 | 1025-01-082-3586 | EXTRACTOR, PROJECTILE ASSEMBLY (on right hull wall above sponson interior) (19200) 9305465 | | EA | 1 |
| 21 | 5110-00-156-0059 | FILE, HAND smooth, 10 in. lg (in tool bag) (58536) A-A-2313 | | EA | 1 |
| 22 | 5120-00-605-3926 | FIXTURE, TRACK CONNECTOR (with bar lever) 7077695 (on left front cab wall exterior) (19207) 8741739 | | EA | 2 |
| 23 | 6230-00-264-8261 | FLASHLIGHT (on left cab wall interior and driver's compartment) (21108) MX-991/U | | EA | 4 |
| 24 | 7240-00-527-9868 | FUNNEL, 1 QT CAP., W/STRAINER (in rear cab stowage) (58536) A-A-1066 | | EA | 1 |

## Section III. BASIC ISSUE ITEMS - CONTINUED

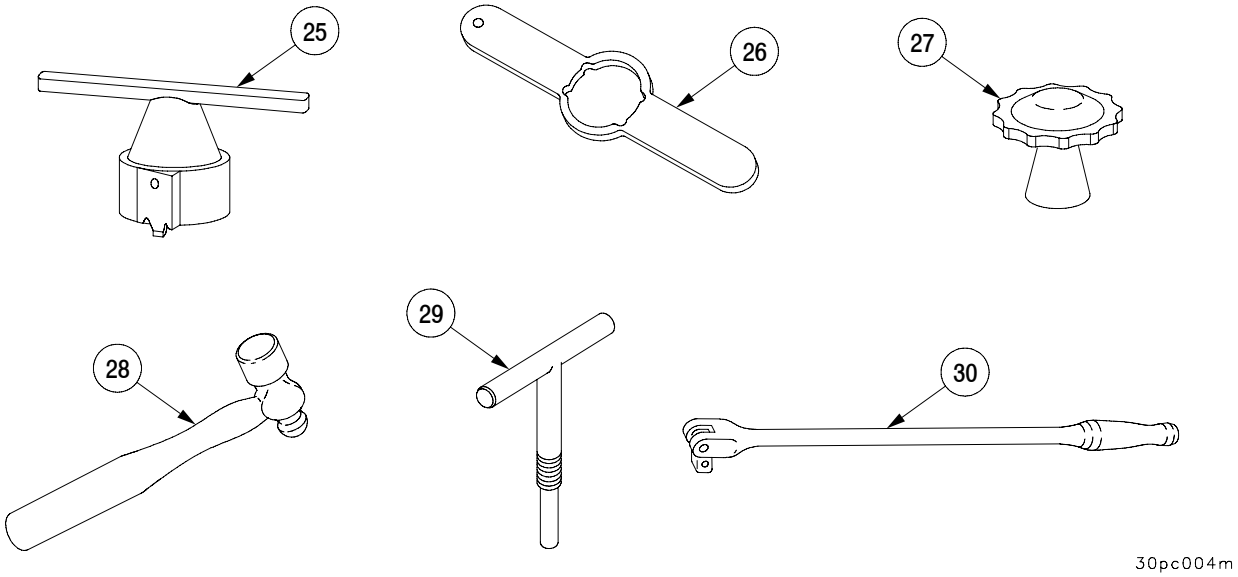


| (1) Illus Number | (2) National Stock Number | (3) Description CAGEC and Part Number | Usable On Code | (4) U/I | (5) Qty Reqd |
|---|---|---|---|---|---|
| 25 | 1290-00-764-7761 | FUZE SETTER, M27<br>(on left cab wall interior)<br>(19200) 7647761 | | EA | 1 |
| 26 | 1290-00-078-4367 | FUZE SETTER, M34<br>(on left cab wall interior)<br>(19200) 11747300 | | EA | 1 |
| 27 | 1290-00-201-3507 | FUZE SETTER, M35<br>(on left cab wall interior)<br>(19200) 11729019 | | EA | 1 |
| 28 | 5120-00-061-8546 | HAMMER, HAND<br>machinist's 2 lb<br>ball peen (in tool bag)<br>(55719) BPN32A | | EA | 1 |
| 29 | 5340-01-318-0197 | HANDLE, MANUAL, T-HANDLE<br>(in tool bag)<br>(19200) 9399097 | | EA | 1 |
| 30 | 5120-00-236-7590 | HANDLE, SOCKET, WRENCH<br>hinged, 1/2 in. dr, 17 in. lg<br>(in tool bag)<br>(19207) 11655786-1 | | EA | 1 |

## Section III. BASIC ISSUE ITEMS - CONTINUED

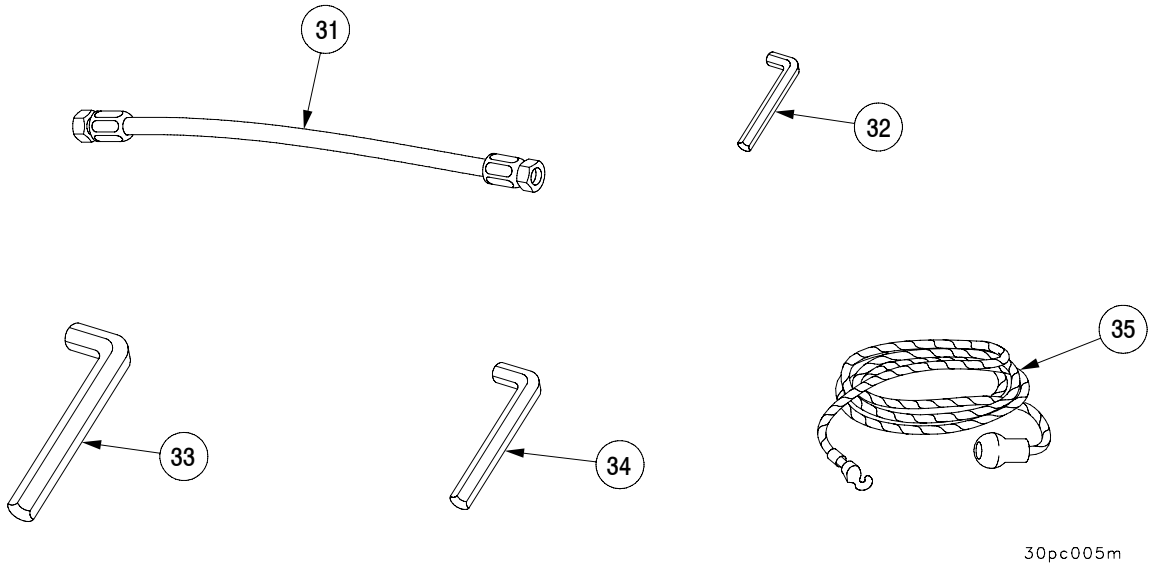


| (1) Illus Number | (2) National Stock Number | (3) Description CAGEC and Part Number | Usable On Code | (4) U/I | (5) Qty Reqd |
|---|---|---|---|---|---|
| 31 | 4720-00-289-6335 | HOSE ASSEMBLY, NONMETALLIC<br>(used w/M3 oil gun)<br>(in cab rear stowage box)<br>(96906) MS28741-4-0160 | | EA | 1 |
| 32 | 5120-00-240-5300 | KEY, SOCKET HEAD SCREW<br>3/16 in.<br>(in tool bag)<br>(64959) 8223516 | | EA | 1 |
| 33 | 5120-00-198-5390 | KEY, SOCKET HEAD SCREW 3/8 in.<br>(in tool bag)<br>(80064) 1940722 | | EA | 1 |
| 34 | 5120-00-240-5274 | KEY, SOCKET HEAD SCREW<br>5/16 in.<br>(in tool bag)<br>(10001) 1112876 | | EA | 1 |
| 35 | 1095-00-600-6780 | LANYARD, 6 ft lg<br>(in oddment box)<br>(19206) 6006780 | | EA | 1 |

## Section III. BASIC ISSUE ITEMS - CONTINUED

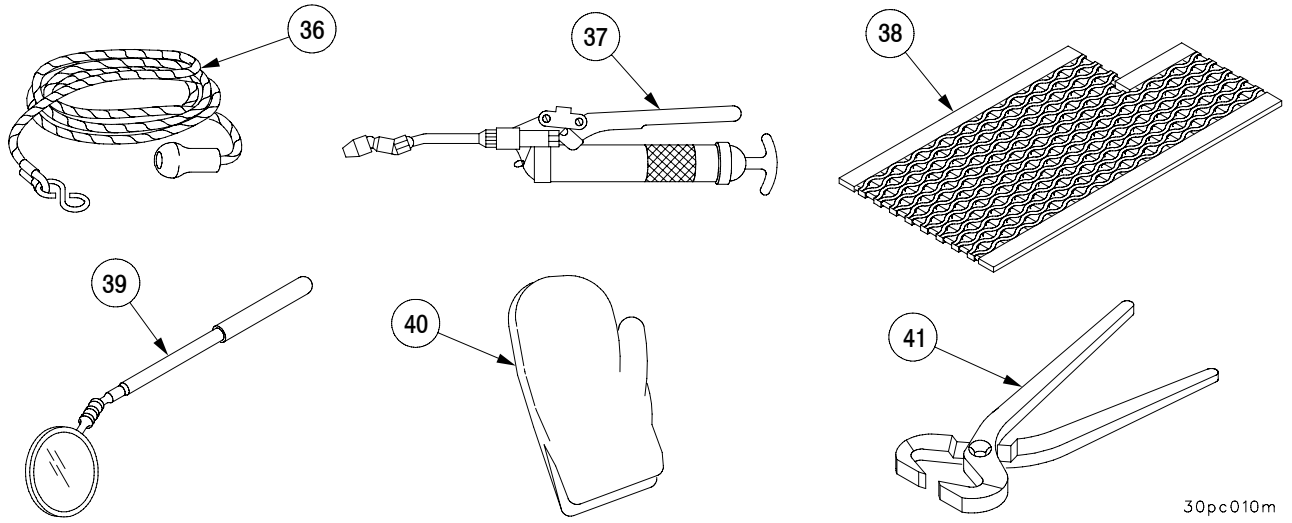


| (1) Illus Number | (2) National Stock Number | (3) Description CAGEC and Part Number | Usable On Code | (4) U/I | (5) Qty Reqd |
|---|---|---|---|---|---|
| 36 | 4020-00-610-9018 | LANYARD, 50 ft lg<br>(in oddment box)<br>(19204) 6109018 | | EA | 1 |
| 37 | 4930-00-766-3545 | LUBRICATING GUN, HAND<br>high pressure<br>(in tool bag)<br>(36251) 102758 | | EA | 1 |
| 38 | 2540-01-298-8449 | MAT, FLOOR<br>(on vehicle floor)<br>(19207) 12352892 | | EA | 2 |
| 39 | 5120-01-278-8257 | MIRROR, INSPECTION<br>(in tool bag)<br>(81348) GGG-M-350 | | EA | 1 |
| 40 | 8415-01-092-0039 | MITTEN, HEAT PROTECTIVE<br>pair M1942<br>(in oddment tray)<br>(81349) MIL-M-11199F | | EA | 2 |
| 41 | 5110-00-221-1499 | NIPPERS, END CUTTING<br>(in tool bag)<br>(81348) GGG-N-350 | | EA | 1 |

## Section III. BASIC ISSUE ITEMS - CONTINUED

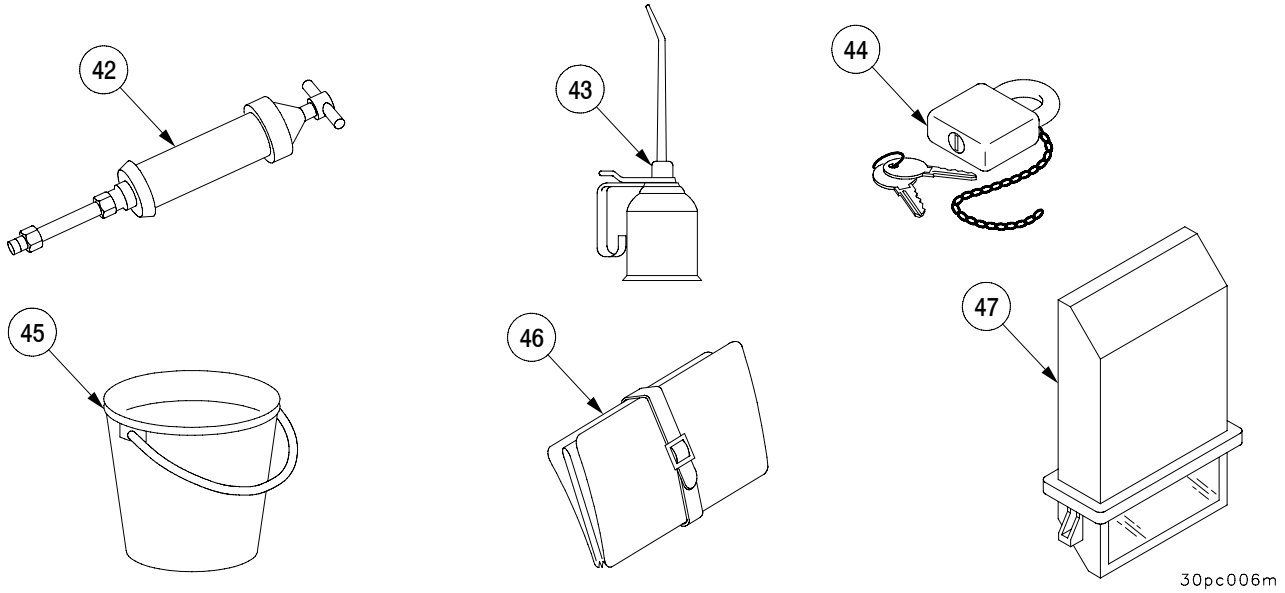


| (1) Illus Number | (2) National Stock Number | (3) Description CAGEC and Part Number | Usable On Code | (4) U/I | (5) Qty Reqd |
|---|---|---|---|---|---|
| 42 | 4930-00-550-6661 | OIL GUN, PNEUMATIC<br>(fluid direct delivery, M3)<br>(in cab rear storage box)<br>(19204) 5506661 | | EA | 1 |
| 43 | 4930-00-262-8868 | OILER, HAND STEEL, PUMP<br>(on rear hull door interior)<br>TYPE, 1 pt, spout, 9 in. lg<br>(72798) 328 | | EA | 1 |
| 44 | 5340-00-158-3805 | PADLOCK SERIES 200<br>(on rear hull door exterior)<br>(81349) MIL-P-17802 | | EA | 1 |
| 45 | 7240-00-160-0455 | PAIL, UTILITY 14 qt<br>(on vehicle floor)<br>(58536) A-A-1273 | | EA | 1 |
| 46 | 8345-00-174-6865 | PANEL MARKER SIGNAL, GROUND TO AIR<br>(in cab rear stowage box)<br>(81349) MIL-P-40061 AMEND 1 | | EA | 2 |
| 47 | 1240-00-344-4643 | PERISCOPE, M27 (chief of section)<br>(stowage box cab wall interior)<br>(19200) 7633132 | | EA | 1 |

## Section III. BASIC ISSUE ITEMS - CONTINUED

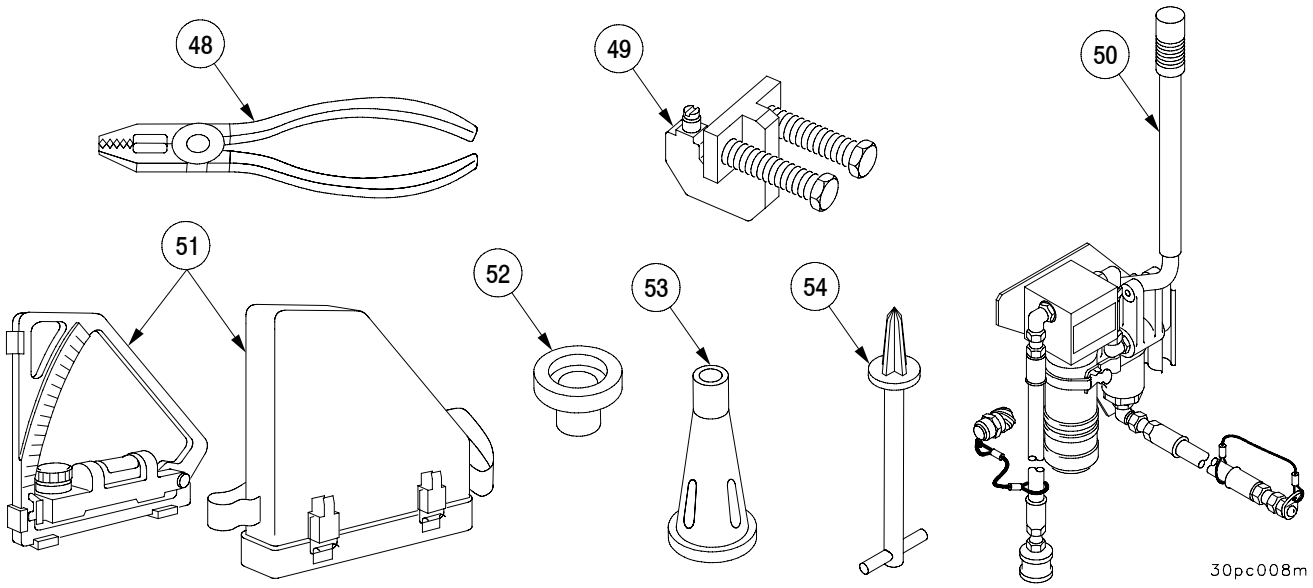


| (1) Illus Number | (2) National Stock Number | (3) Description CAGEC and Part Number | Usable On Code | (4) U/I | (5) Qty Reqd |
|---|---|---|---|---|---|
| 48 | 5120-00-239-8251 | PLIERS, LINEMANS SIDE CUTTING<br>8 in. lg (in tool bag)<br>(95683) 41P1839 | | EA | 1 |
| 49 | 5180-01-477-8120 | PULLER, CONNECTOR, TRACK<br>(in tool bag)<br>(19207) 57K3254 | | EA | 1 |
| 50 | 4320-01-384-9477 | PUMP, HAND<br>(fluid, direct delivery)<br>(19200) 12927638 (Stowage box in left stowage basket) | | EA | 1 |
| 51 | 1290-00-891-9999 | QUADRANT, FIRE CONTROL<br>gunner's M1A1 w/case<br>(in cab side stowage box)<br>(19200) 7197156 | | EA | 1 |
| 52 | 1030-00-730-7416 | RAMMER, LOADING M13<br>(in cab rear stowage box)<br>(19206) 7307416 | | EA | 1 |
| 53 | 1025-00-860-5443 | RAMMER, ARTILLERY, UNLOADING<br>(in cab rear stowage box)<br>(19206) 8767210 | | EA | 1 |
| 54 | 5110-01-026-5253 | REAMER ASSEMBLY<br>(in tool roll 7964537)<br>(19206) 11578743 | | EA | 1 |

## Section III. BASIC ISSUE ITEMS - CONTINUED

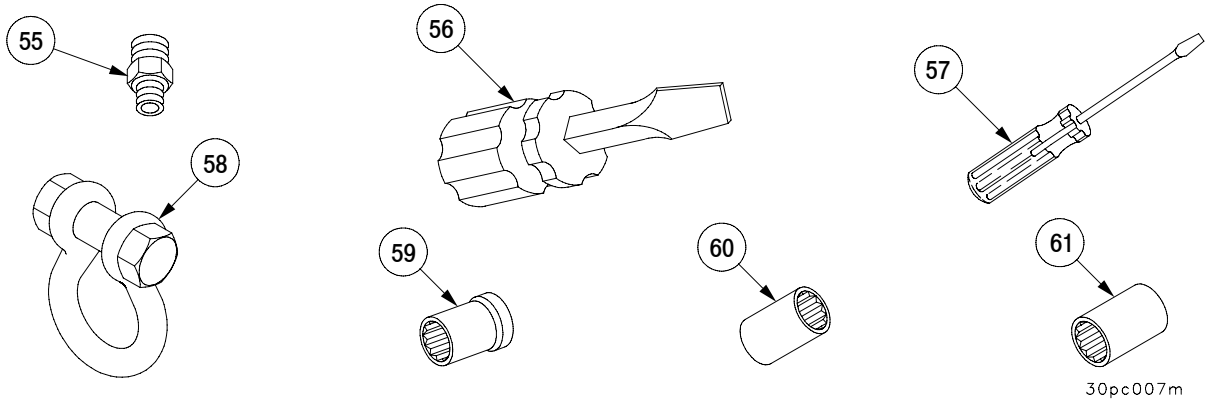


| (1) Illus Number | (2) National Stock Number | (3) Description CAGEC and Part Number | Usable On Code | (4) U/I | (5) Qty Reqd |
|---|---|---|---|---|---|
| 55 | 4730-00-804-1907 | REDUCER, TUBE<br>(use w/M3 oil gun)<br>(in cab rear stowage box)<br>(96906) MS24399-4 | | EA | 1 |
| 56 | 5120-00-596-8502 | SCREWDRIVER, FLAT-TIP<br>Special purpose, 1/4 in. tip<br>w/blade 1-1/2 in. lg<br>(in tool bag)<br>(63653) 45-11465TW | | EA | 1 |
| 57 | 5120-00-236-2140 | SCREWDRIVER, FLAT-TIP<br>special purpose, 1/8 in. tip<br>w/clip blade 2 in. lg (in tool bag)<br>(32242) 49-11630 | | EA | 1 |
| 58 | 4030-01-187-0964 | SHACKLE, SAFETY ANCHOR<br>(in cab rear stowage box)<br>(19207) 12328579 | | EA | 8 |
| 59 | 5120-00-237-0984 | SOCKET, SOCKET WRENCH<br>1/2 in. dr. 12 pt x 1/2 in. opng<br>(in tool bag)<br>(58536) A-A-1399 | | EA | 1 |
| 60 | 5120-00-189-7927 | SOCKET, SOCKET WRENCH<br>1/2 in. dr, 12 pt x 1/2 in. opng (in tool bag)<br>(19207) 11677025-7 | | EA | 1 |
| 61 | 5210-00-189-7932 | SOCKET, SOCKET WRENCH<br>1/2 in. dr, 12 in. pt x 9/16 in. opng<br>(in tool bag)<br>(19207) 11677025-1 | | EA | 1 |

## Section III. BASIC ISSUE ITEMS - CONTINUED

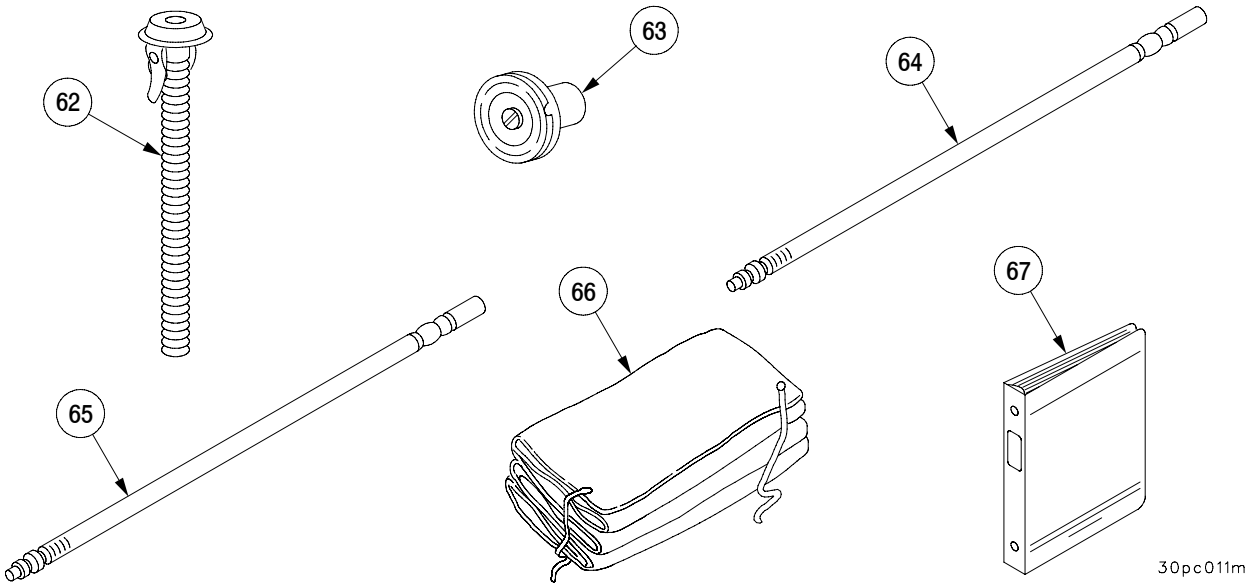


| (1) Illus Number | (2) National Stock Number | (3) Description CAGEC and Part Number | Usable On Code | (4) U/I | (5) Qty Reqd |
|---|---|---|---|---|---|
| 62 | 7240-00-177-6154 | SPOUT, CAN, FLEXIBLE W/FILTER SCREEN 2 1/2 IN. OD, 16 in. lg (in tool bag) (19207) 11677020 | | EA | 1 |
| 63 | 1030-00-859-4511 | STAFF SECTION, CLEANING (holder chamber swab sponge) (oddment tray) (19206) 8765688 | | EA | 1 |
| 64 | 1025-01-044-2587 | STAFF SECTION, CLEANING 24” lg (on right cab wall exterior) (19206) 11579227 | | EA | 1 |
| 65 | 1025-00-563-7232 | STAFF SECTION, CLEANING ARTILLERY M15A1 (on right cab wall exterior) (19206) 7309228 | | EA | 7 |
| 66 | 2540-00-653-7589 | TARPAULIN w/ropes (in cab rear stowage box) (19207) 6537589 | | EA | 1 |
| 67 | | TECHNICAL MANUAL, OPERATOR’S (TM 9-2350-314-10) HOWITZER, MEDIUM, SELF-PROPELLED, 155mm M109A6 ( in pamphlet bag) | | EA | 1 |

## Section III. BASIC ISSUE ITEMS - CONTINUED

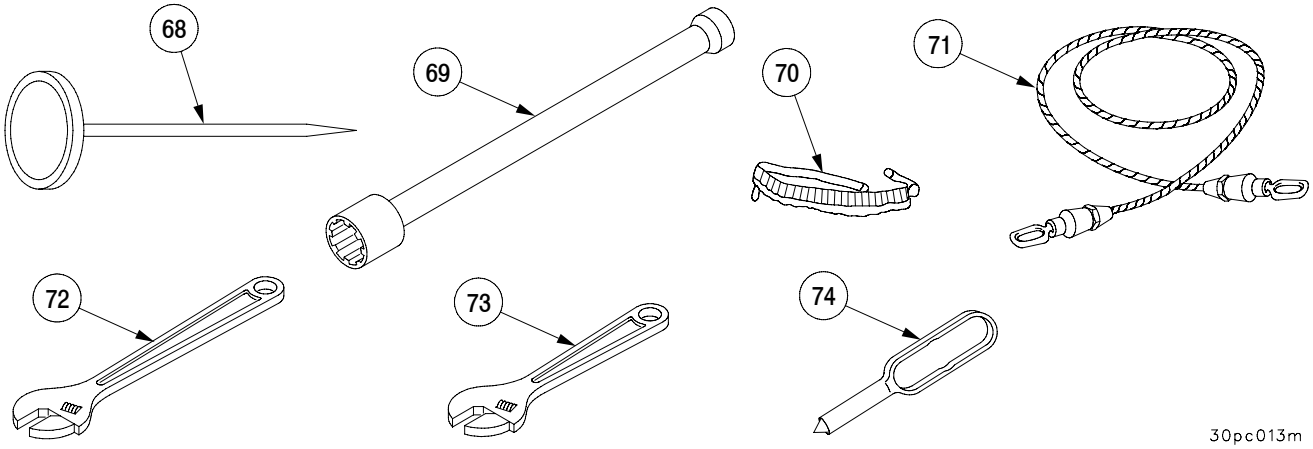


| (1) Illus Number | (2) National Stock Number | (3) Description CAGEC and Part Number | Usable On Code | (4) U/I | (5) Qty Reqd |
|---|---|---|---|---|---|
| 68 | 6685-00-344-4603 | THERMOMETER, SELF-INDICATING BIMETALLIC, concentric dial, -80°F to 160°F (in small oddment tray interior left side cab floor) (81349) MILT3618C | | EA | 1 |
| 69 | 5120-01-352-5676 | TOOL, CANISTER RETAINING (in cab rear stowage box) (19200) 12910438 | | EA | 1 |
| 70 | 5340-00-860-5446 | WEBBING, STRAP, (PRIMER M8) (in right cab stowage box) (19206) 8767215 | | EA | 1 |
| 71 | 4010-01-041-9752 | WIRE ROPE ASSEMBLY towing cable 1-1/8 in. x 15 ft lg (on top of cab) (19207) 7360553-1 | | EA | 1 |
| 72 | 5120-00-264-3796 | WRENCH, ADJUSTABLE single end, 15/16, 12 in. lg (in tool bag) (19207) 11655778-5 | | EA | 1 |
| 73 | 5120-00-240-5328 | WRENCH, ADJUSTABLE single end, 15/16, 8 in. lg (in tool bag) (92878) 1500559 | | EA | 1 |
| 74 | 4933-00-723-1161 | WRENCH, FUZE SETTER M18 (on left cab wall interior) (19206) 7231161 | | EA | 1 |

## Section III. BASIC ISSUE ITEMS - CONTINUED

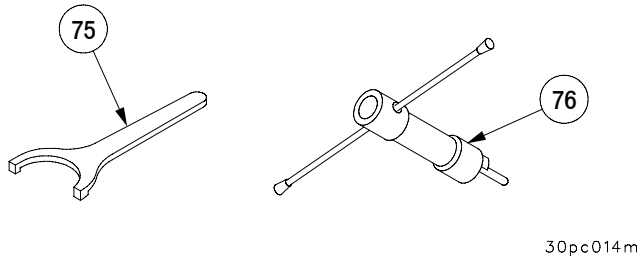


| (1) Illus Number | (2) National Stock Number | (3) Description CAGEC and Part Number | Usable On Code | (4) U/I | (5) Qty Reqd |
|---|---|---|---|---|---|
| 75 | 5120-00-293-0206 | WRENCH, SPANNER<br>(in tool bag)<br>(81348) GGG-W-665 | | EA | 1 |
| 76 | 5120-00-446-3750 | WRENCH, SPANNER obturator nut<br>(in tool roll 7964537)<br>(19206) 8769014 | | EA | 1 |

# APPENDIX C

# ADDITIONAL AUTHORIZATION LIST

## Section I. INTRODUCTION

### C-1 SCOPE.

This appendix lists additional items authorized for the support of the M109A6 howitzer.

### C-2 GENERAL.

This list identifies items that do not have to accompany the M109A6 howitzer and that do not have to be turned in with it. These items are all authorized to you by CTA, MTOE, TDA, or JTA.

### C-3 EXPLANATION OF LISTING.

National Stock Numbers, descriptions, and quantities are provided to help identify and request the additional items required to support this equipment.

## Section II. ADDITIONAL AUTHORIZED ITEMS LIST

| (1) NATIONAL STOCK NUMBER | (2) DESCRIPTION CAGEC & PART NUMBER / USABLE ON CODE | (3) U/I | (4) QTY. RECM. |
|---|---|---|---|
| 4930-00-288-1511 | ADAPTER, GREASE GUN<br>(in tool bag)<br>(81349) MIL-L-4387 | EA | 1 |
| 5120-00-227-8088 | ADAPTER SOCKET WRENCH<br>1/2 in.-3/4 in. (in tool bag)<br>(58536) A-A-2172 | EA | 1 |
| 5110-00-293-2336 | AXE, SINGLE BIT:<br>4-3/4 in. blade,<br>(on left exterior cab wall)<br>(19207) 6150925 | EA | 1 |
| 5120-00-526-6044 | BAR, PINCH<br>1/2 inch x 11-7/8 in. lg<br>(in tool bag)<br>(19204) 5266044 | EA | 1 |
| 6135-01-090-5365 | BATTERY, (NVD) (non-rechargeable)<br>(in left side external stowage basket)<br>(80058) BA-5567/U | EA | 1 |
| 5140-00-261-4994 | CARRIER, TOOL M1938<br>(in tool bag)<br>(19207) 11655787 | EA | 1 |
| 5110-00-236-3272 | CHISEL, COLD, HAND<br>3/4 in. X 8 in. lg<br>(in tool bag)<br>(81348) GGG-C-313 | EA | 1 |
| 1290-00-653-6513 | COVER, AIMING POST<br>(on top of cab)<br>(19200) 6537993 | EA | 1 |
| 1025-00-557-6513 | COVER, BRUSH<br>(19206) 5576513 | EA | 1 |
| 4230-01-133-4124 | DECONTAMINATING APPARATUS<br>- M13 (on right exterior cab wall)<br>(81361) E5-51-527 | EA | 1 |
| 5120-00-227-8074 | EXTENSION, SOCKET WRENCH<br>1/2 in. dr x 10 in. lg (in tool bag)<br>(19207) 11655788-1 | EA | 1 |

## Section II. ADDITIONAL AUTHORIZED ITEMS LIST - CONTINUED

| (1) NATIONAL STOCK NUMBER | (2) DESCRIPTION CAGEC & PART NUMBER USABLE ON CODE | (3) U/I | (4) QTY. RECM. |
|---|---|---|---|
| 5120-00-227-8079 | EXTENSION, SOCKET WRENCH 3/4 in. dr x 16 in. lg (in tool bag) (55719) L122 | EA | 1 |
| 5120-00-273-9208 | EXTENSION, SOCKET WRENCH 3/4 in. dr x 3 in. lg (in tool bag) (55719) L32 | EA | 1 |
| 5110-00-241-9160 | FILE, HAND three square, smooth, 6 in. lg (in tool bag) (81348) GGG-F-325 | EA | 1 |
| 6545-00-922-1200 | FIRST AID KIT, GENERAL (on right cab wall interior) (19207) 11677011 | EA | 1 |
| 5120-00-900-6097 | HAMMER double face with handle, 10 lb (on cab roof) (81348) GGG-H-86 | EA | 1 |
| 5120-00-288-6574 | HANDLE, MATTOCK-PICKEA 2 (on left exterior cab wall) (19207) 11677021 | EA | 2 |
| 5120-00-099-8544 | HANDLE, SOCKET WRENCH T-handle 3/4 in. dr x 12 in. lg (in tool bag) (50024) 2479141 | EA | 1 |
| 5120-00-249-1071 | HANDLE, SOCKET WRENCH 1/2 in. dr nutspeeder (in tool bag) (81348) A-A-2166 | EA | 1 |
| 5120-00-230-6385 | HANDLE, SOCKET WRENCH ratchet 1/2 in. dr x 9-1/2 in. lg (in tool bag) (80064) 14U1502 | EA | 1 |
| 5120-00-241-3142 | HANDLE, SOCKET WRENCH 1/2 in. dr X 7 in. lg (in tool bag) (55719) 510 | EA | 1 |
| 5110-00-222-0457 | HATCHET, CLAW 4-CUT (in rear cab, stowage box) (81348) GGG-H-131 | EA | 1 |

## Section II. ADDITIONAL AUTHORIZED ITEMS LIST - CONTINUED

| (1) NATIONAL STOCK NUMBER | (2) DESCRIPTION CAGEC & PART NUMBER / USABLE ON CODE | (3) U/I | (4) QTY. RECM. |
|---|---|---|---|
| - | HOSE ASSEMBLY<br>(used with hydraulic hand pump assembly)<br>(stowage box in left stowage basket)<br>(19200) 12940905 | EA | 1 |
| 5120-00-224-2510 | KEY, SOCKET HEAD SCREW<br>5/8 in. hex (in tool bag)<br>(81348) GGG-K-275 | EA | 1 |
| 5120-00-224-4659 | KEY, SOCKET HEAD SCREW<br>1/4 in. hex (in tool bag)<br>(80064) 1940720 | EA | 1 |
| 5120-00-240-5292 | KEY, SOCKET HEAD SCREW<br>1/8 in. hex (in tool bag)<br>(56232) 0181-8 | EA | 1 |
| 5120-00-242-7410 | KEY, SOCKET HEAD SCREW<br>3/32 in. hex (in tool bag)<br>(92674) BA27077-4 | EA | 1 |
| 9905-00-534-8376 | KIT, WARNING DEVICE, HIGHWAY<br>(3-fluorescent orange triangles)<br>(in rear cab stowage box)<br>(58536) A-A-2128 | EA | 1 |
| 1290-01-148-4821 | LIGHT, AIMING POST M14EA2<br>(stowage location is at the discretion of the Chief of Section)<br>(19200) 11785401 | EA | 2 |
| 5120-00-243-2395 | MATTOCK head<br>(on cab right front)<br>(19207) 11677022 | EA | 1 |
| 5120-00-194-9458 | PICK, DIGGING head<br>(on cab right front)<br>(58536) A-A-338 | EA | 1 |
| 5120-00-223-7397 | PLIERS, SLIP JOINT<br>(in tool bag)<br>(19207) 11655775-3 | EA | 1 |
| 1290-00-535-7617 | POST, AIMING M1A2EA2<br>(in aiming post cover on top of cab)<br>(19200) 7687114 | EA | 2 |

## Section II. ADDITIONAL AUTHORIZED ITEMS LIST - CONTINUED

| (1) NATIONAL STOCK NUMBER | (2) DESCRIPTION CAGEC & PART NUMBER USABLE ON CODE | (3) U/I | (4) QTY. RECM. |
|---|---|---|---|
| 5120-00-293-0791 | PUNCH, DRIVE PIN straight type 3/16" dia (in tool bag) (81348) GGG-P-831 | EA | 1 |
| 4933-00-796-4537 | ROLL ASSEMBLY, TOOLS AND EQUIPMENT (in cab rear stowage box) (19207) 7964537 | EA | 1 |
| 5210-00-234-5223 | RULE, STEEL machinist 6 inches (in tool bag) (57163) C604R-6 | EA | 1 |
| 5120-00-227-7338 | SCREWDRIVER, FLAT-TIP machinist extra heavy duty, 5 inch blade (in tool bag) (77948) D339 | EA | 1 |
| 5120-00-278-1283 | SCREWDRIVER, FLAT-TIP common normal duty single grip, 6 inch blade (in tool bag) (19207) 41S1104 | EA | 1 |
| 5120-00-236-2127 | SCREWDRIVER, FLAT-TIP 3 inch lg blade, 3/16" tip (in tool bag) (89905) 133690-10 | EA | 1 |
| 5120-00-188-8450 | SHOVEL, HAND genl purpose long handled strap back rd point (on top exterior cab) (81348) GGG-S-326 | EA | 1 |
| 5120-00-293-3336 | SHOVEL, HAND genl purpose rd point D-handle (on left exterior cab wall) (19207) 11655784 | EA | 1 |
| 5120-00-189-7911 | SOCKET, SOCKET WRENCH 1/2 in. dr, 12 in. pt x 3/8 in. opng (in tool bag) (65814) ST812 | EA | 1 |
| 5120-00-189-7913 | SOCKET, SOCKET WRENCH 1/2 in. dr, 12 pt x 1-1/16 in. opng (in tool bag) (19207) 11677025-8 | EA | 1 |

## Section II. ADDITIONAL AUTHORIZED ITEMS LIST - CONTINUED

| (1) NATIONAL STOCK NUMBER | (2) DESCRIPTION CAGEC & PART NUMBER USABLE ON CODE | (3) U/I | (4) QTY. RECM. |
|---|---|---|---|
| 5120-00-189-7914 | SOCKET, SOCKET WRENCH 1/2 in. dr, 12 pt x 1-1/8 in. opng (in tool bag) (19207) 11677025-10 | EA | 1 |
| 5120-00-189-7924 | SOCKET, SOCKET WRENCH 1/2 in. dr, 12 pt x 7/16 in. opng (in tool bag) (95683) 41W3005 | EA | 1 |
| 5120-00-189-7930 | SOCKET, SOCKET WRENCH 3/4 in. dr, 12 pt x 1-3/8 in. opng (in tool bag) (47805) 5544 | EA | 1 |
| 5120-00-189-7931 | SOCKET, SOCKET WRENCH 3/4 in. dr, 12 pt x 1-7/16 in. opng (in tool bag) (47805) 5546 | EA | 1 |
| 5120-00-189-7934 | SOCKET, SOCKET WRENCH 1/2 in. dr, 12 pt x 7/8 in. opng (in tool bag) (19207) 11677025-5 | EA | 1 |
| 5120-00-189-7935 | SOCKET, SOCKET WRENCH 1/2 in. dr, 12 pt x 15/16 in. opng (in tool bag) (19207) 11677025-6 | EA | 1 |
| 5120-00-189-7946 | SOCKET, SOCKET WRENCH 1/2 in. dr, 12 pt x 5/8 in. opng (in tool bag) (19207) 11677025-2 | EA | 1 |
| 5130-00-221-8010 | SOCKET, SOCKET WRENCH 1/2 in. dr, 12 pt x 3/4 in. opng (in tool bag) (80204) B107.2 | EA | 1 |
| 5120-00-232-5681 | SOCKET, SOCKET WRENCH 3/4 in. dr, 12 pt x 1-5/16 in. opng (in tool bag) (58536) A-A-1394 | EA | 1 |
| 5120-00-293-0094 | SOCKET, SOCKET WRENCH 3/4 in. dr, 12 pt x 1-1/2 in. opng (in tool bag) (47805) 5548 | EA | 1 |

## Section II. ADDITIONAL AUTHORIZED ITEMS LIST - CONTINUED

| (1) NATIONAL STOCK NUMBER | (2) DESCRIPTION CAGEC & PART NUMBER USABLE ON CODE | (3) U/I | (4) QTY. RECM. |
|---|---|---|---|
| 5130-00-221-8005 | SOCKET, SOCKET WRENCH 1/2 in. dr, 6 pt x 7/16 in. opng (in tool bag) (55719) 1P140 | EA | 1 |
| 5130-00-221-8007 | SOCKET, SOCKET WRENCH 1/2 in. dr, 6 pt x 9/16 in. opng (in tool bag) (30760) 1P180 | EA | 1 |
| 5120-00-235-5871 | SOCKET, SOCKET WRENCH 3/4 in. dr, 1-1/4 in. (in tool bag) (47805) 5540 | EA | 1 |
| 7310-00-285-6155 | STOVE, GASOLINE BURNER w/case (in cab rear storage box) (81349) MIL-S-10736 | EA | 1 |
| 6675-00-240-1881 | TRIPOD, SURVEYING (use with aiming post for Arctic use only) (81349) MIL-T-11674 | EA | 2 |
| 5120-00-269-7971 | UNIVERSAL JOINT, SOCKET WRENCH 1/2 in. dr (in tool bag) (18702) 5166189 | EA | 1 |
| 8415-01-217-5634 | VEST, MICROCLIMATE (in hull NBC stowage box) (81337) 2-11-1 | EA | 5 |
| 5120-00-187-7123 | WRENCH, OPEN END engr 15 deg angle double head 7/16 in. x 1/2 in. (in tool bag) (55719) S1416 | EA | 1 |
| 5120-00-187-7130 | WRENCH, OPEN END engr 15 deg angle double head 13/16 in. x 7/8 in. (in tool bag) (07971) E2628 | EA | 1 |
| 5120-00-224-3102 | WRENCH, OPEN END engr 15 deg angle double head 5/8 in. x 3/4 in. (in tool bag) (65814) 729 | EA | 1 |

## Section II. ADDITIONAL AUTHORIZED ITEMS LIST - CONTINUED

| (1) NATIONAL STOCK NUMBER | (2) DESCRIPTION CAGEC & PART NUMBER USABLE ON CODE | (3) U/I | (4) QTY. RECM. |
|---|---|---|---|
| 5120-00-277-2307 | WRENCH, OPEN END<br>engr 15 deg angle<br>double head 5/16 in. x 3/8 in.<br>(in tool bag)<br>(55719) S1012 | EA | 1 |
| 5120-00-277-7025 | WRENCH, OPEN END<br>engr 15 deg angle<br>double head 15/16 in. x 1 in.<br>(in tool bag)<br>(19207) 11655789-5 | EA | 1 |
| 5120-00-293-2134 | WRENCH, OPEN END<br>engr 15 deg angle<br>double head 9/16 in. x 11/16 in.<br>(in tool bag)<br>(19207) 5323330 | EA | 1 |
| 5120-00-264-3777 | WRENCH, SPANNER<br>adjustable (in tool bag)<br>(65814) 484 | EA | 1 |
| 5120-00-277-9076 | WRENCH, SPANNER<br>adjustable 2 in. to 4-3/4 in.<br>(in tool bag)<br>(19207) 5218469 | EA | 1 |

# APPENDIX D

# EXPENDABLE/DURABLE SUPPLIES AND MATERIALS LIST

## Section I. INTRODUCTION

### D-1 SCOPE.

This appendix lists expendable/durable supplies and materials needed to operate and maintain the M109A6. This listing is for informational purposes only, and is not authority to requisition the listed items. These items are authorized by CTA 50-970, Expendable Items (Except Medical, Class V, Repair Parts, and Heraldic Items), or CTA 8-100, Army Medical Department Expendable/Durable Items.

### D-2 EXPLANATION OF COLUMNS.

a. Column 1 - Item number. This number is assigned to the entry in the listing and is referenced in the narrative instructions to identify the material (e.g., "Use cleaning compound, Item 8, Appx D").

b. Column 2 - Level. This column identifies the lowest level of maintenance that requires the listed item:

C - Operator/Crew

c. Column 3 - National Stock Number. This is the National Stock Number assigned to the item. Use it to request or requisition the item.

d. Column 4 - Description. Indicates the federal item name and, if required, a description to identify the item. The last line for each item indicates the Commercial and Government Entity Code (CAGEC) and Part Number.

e. Column 5 - Unit of Measure (U/M). Indicates the measure used in performing the actual maintenance function. This measure is expressed by a two-character alphabetical abbreviation (e.g., ea, in., pr). If the unit of measure differs from the unit of issue, requisition the lowest unit of issue that will satisfy your requirements.

## Section II. EXPENDABLE/DURABLE SUPPLIES AND MATERIALS LIST

| (1) ITEM NUMBER | (2) LEVEL | (3) NATIONAL STOCK NUMBER | (4) ITEM NAME, DESCRIPTION CAGEC, PART NUMBER | (5) U/M |
|---|---|---|---|---|
| 1 | C | 6810-01-190-2538 | ALCOHOL, ISOPROPYL TT-I-735 (81348) | CN |
| 2 | C | 6850-01-127-7193 | ANTI-FOGGING KIT: 1 kit (81349) MIL-A-13550 | KT |
| 3 | C | 6850-01-441-3240 | ANTIFREEZE, 5 GAL. CONTAINER (58536) A-A-52624 | GL |
| 4 | C | 6850-00-464-9096 | ANTIFREEZE, ARCTIC TYPE, 55 GAL. DRUM (81349) MIL-A-11755 | GL |
| 5 | C | 8105-00-269-4662 | BAG, PLASTIC: STD PKG 25 (81349) MIL-B-117 | PG |
| 6 | C | 8105-00-299-8532 | BAG, PLASTIC: STD PKG 100 (58536) A-A-1668 | BX |
| 7 | C | 8115-00-190-5020 | BOX, SHIPPING (10 EACH, BDL) (81349) PPP-B-36 | EA |
| 8 | C | 6850-00-598-7328 | CLEANING COMPOUND, 2 CCMP CAN (81349) MIL-C-10597 | KT |
| 9 | C | 6850-00-227-1887 | CLEANING COMPOUND, OPTICAL LENS (81349) MIL-C-43454 | QT |
| 10 | C | 6850-00-224-6665 | CLEANING COMPOUND, 5 GAL. CAN (81349) MIL-C-11090 | GL |
| 11 | C | 9150-01-053-6688 | CLEANER, LUBRICANT AND PRESERVATIVE: Grade 2 (CLP) (81349) MIL-L-63460 | GL |
| 12 | C | 5350-00-221-0872 | CLOTH, ABRASIVE CROCUS 50 SHEETS (81349) P-C-458 | PG |
| 13 | C | 6850-00-753-4827 | DECON AGENT, DS2, 1.3 QT MIL-D-50030 | QT |
| 14 | C | 6850-00-901-0591 | DEICING-DEFROSTING COMPOUND 5 GAL. CAN (81349) MIL-A-8243D | GL |
| 15 | C | 6850-00-285-8011 | DRY-CLEANING SOLVENT, 55 GAL. DRUM (81349) MIL-PRF-680 | GL |
| 16 | C | 9110-00-391-7813 | FUEL, JELLIED, ALCOHOL 2.625 OZ CAN (50616) 4006 | OZ |

## Section II. EXPENDABLE/DURABLE SUPPLIES AND MATERIALS LIST-CONTINUED

| (1) ITEM NUMBER | (2) LEVEL | (3) NATIONAL STOCK NUMBER | (4) ITEM NAME, DESCRIPTION CAGEC, PART NUMBER | (5) U/M |
|---|---|---|---|---|
| 17 | C | | GLOVES, PATIENT, EXAM (PACKAGE OF 100) (89875) | PG |
| | | 6515-01-150-2976 | E-010 SIZE SMALL | |
| | | 6515-01-150-2978 | E-012 SIZE MEDIUM | |
| | | 6515-01-150-2977 | E-011 SIZE LARGE | |
| 18 | C | | GREASE, AUTOMOTIVE AND ARTILLERY (98308) MIL-PRF-10924 | |
| | | 9150-01-197-7693 | 14 OZ. CARTRIDGE (81349) MIL-PRF-10924 | OZ |
| | | 9150-01-197-7690 | 1.75 LB CAN (81349) MIL-PRF-10924 | LB |
| | | 9150-01-197-7689 | 6.5 LB CAN (81349) MIL-PRF-10924 | LB |
| 19 | C | | GREASE, AIRCRAFT AND INSTRUMENT, (81349) MIL-G-23827 | |
| | | 9150-00-985-7246 | 1 LB CAN | LB |
| | | 9150-00-985-7247 | 7 LB CAN | LB |
| | | 9150-00-985-7248 | 35 LB CAN | LB |
| 20 | C | | GREASE, GENERAL PURPOSE (81349) MIL-G-23549 | |
| | | 9150-00-985-7316 | 1-3/4 LB CAN | LB |
| | | 9150-00-823-8047 | 35 LB CAN | LB |
| 21 | C | | GREASE, MOLYBDENUM DISULFIDE (81349) MIL-G-21164 | |
| | | 9150-00-754-2595 | 1-3/4 LB CAN | LB |
| | | 9150-00-223-4004 | 6-1/2 LB CAN | LB |
| | | 9150-00-965-2003 | 35 LB CAN | LB |
| 22 | C | | HYDRAULIC FLUID, PET., OHT, (81349) MIL-PRF-6083 | |
| | | 9150-00-935-9808 | 1 GAL. CAN | GL |
| | | 9150-00-935-9807 | 1 QT CAN | QT |
| 23 | C | 6850-00-664-7123 | INHIBITOR, CORROSION, 5 OZ CAN (81349) 014905OZ. | OZ |
| 24 | C | 1025-01-196-2172 | KIT, ARTILLERY, CLEANING AND PRESERVATIVE (59678) SK1-84JS | KT |

## Section II. EXPENDABLE/DURABLE SUPPLIES AND MATERIALS LIST-CONTINUED

| (1) ITEM NUMBER | (2) LEVEL | (3) NATIONAL STOCK NUMBER | (4) ITEM NAME, DESCRIPTION CAGEC, PART NUMBER | (5) U/M |
|---|---|---|---|---|
| 25 | C | | LUBRICATING OIL, GEAR | |
| | | | (use below O°F) | |
| | | | (81349) MIL-PRF-2105 | QT |
| | | 9150-01-035-5392 | 1 QT CAN | GL |
| | | 9150-01-035-5393 | 5 GAL. CAN | |
| 26 | C | | LUBRICATING OIL, OE/HDO 10 | |
| | | | (81349) MIL-PRF-2104 | |
| | | 9150-00-189-6727 | 1 QT CAN | QT |
| | | 9150-00-186-6668 | 5 GAL. CAN | GL |
| 27 | C | | LUBRICATING OIL, OE/HDO 30 | |
| | | | (81349) MIL-PRF-2104 | |
| | | 9150-00-186-6681 | 1 QT CAN | QT |
| | | 9150-00-188-9858 | 5 GAL. CAN | GL |
| 28 | C | | LUBRICATING OIL, GEN | |
| | | | (81349) MIL-L-3150 | |
| | | 9150-00-231-2361 | 1 QT CAN | QT |
| | | 9150-00-231-2356 | 5 GAL. CAN | GL |
| 29 | C | 9150-00-402-2372 | LUBRICATING OIL, OES, 5 GAL. CAN | GL |
| | | | (15445) CONOCODN600FLUIDTYPE1 | |
| 30 | C | 9150-00-823-7860 | LUBRICATING COMPOUND, 1 PT CAN | CN |
| | | | (OT7G9) 7327 | |
| 31 | C | 9150-00-402-4478 | LUBRICATING OIL, OES, 1 QT CAN | QT |
| | | | (15445) CONOCODN600FLUIDTYPE1 | |
| 32 | C | 9150-00-543-7220 | LUBRICATING OIL, MOLYBDENUM AND | |
| | | | DISULFIDE, SILICONE, 1 LB CAN | LB |
| | | | (81349) DOD-L-25681 | |
| 33 | C | 7920-00-753-5242 | PAD, SCOURING (27293) SCOTCHBRITE96 | BD |
| 34 | C | 6640-00-285-4694 | PAPER, LENS | HD |
| | | | (81348) NNN-P-40 | |
| 35 | C | | PETROLATUM, TECHNICAL | |
| | | | (81348) VV-P-236 | |
| | | 9150-00-250-0926 | 1 LB CAN | LB |
| | | 9150-00-250-0933 | 5 LB CAN | LB |

## Section II. EXPENDABLE/DURABLE SUPPLIES AND MATERIALS LIST-CONTINUED

| (1) ITEM NUMBER | (2) LEVEL | (3) NATIONAL STOCK NUMBER | (4) ITEM NAME, DESCRIPTION CAGEC, PART NUMBER | (5) U/M |
|---|---|---|---|---|
| 36 | C | 4720-00-964-1433 | PLASTIC HOSE, TUBE, NONMETALLIC 1000 FT ROLL (34629) 46-66440 | FT |
| 37 | C | 7920-00-205-1711 | RAG, WIPING, 50 LB BALE (58536) A-A-2522 | LB |
| 38 | C | 6850-00-177-5094 | SILICONE COMPOUND (81343) SAE AS8660 | TU |
| 39 | C | 7510-01-146-7767 | TAPE, PRESSURE SENSITIVE 2-IN. WIDE (81348) PPP-T-60 | RO |
| 40 | C | 7420-00-753-5342 | TOWEL, PAPER, PAPERWIPING, 12 IN. WIDE (14731) | BD |
| 41 | C | 4020-00-241-8875 | TWINE, FIBROUS (58536) A-A228 | FT |
| | | | **NOTE** Items 42 through 47 are applicable to the Loose Projectile Restraint System (LPRS) only. | |
| 42 | C | 2590-01-223-2944 | DIVIDER, AMMUNITION (LONG; (LPRS)), 155mm (28620) AC200000403 | EA |
| 43 | C | 2590-01-223-2945 | DIVIDER, AMMUNITION (SHORT; (LPRS)), 155mm (28620) AC200000402 | EA |
| 44 | C | 2590-01-223-2949 | RACK, AMMUNITION, STOWAGE 15 ROUND, (LPRS), 155mm (28620) AC200000402 | EA |
| 45 | C | 5340-00-980-9277 | STRAP, WEBBING, 1.75 IN. WIDE (19207) 10900880 | EA |
| 46 | C | 5340-01-089-4997 | STRAP, WEBBING (19207) 11669588 | EA |
| 47 | C | 1670-00-725-1437 | TIE DOWN, CARGO, AIRCRAFT; nylon, 1.719 IN. WIDE, (81349) MIL-T-27260TYPECGU1B | EA |
| 48 | C | 6850-01-357-8456 | WIPE, DECONTAMINATION KIT, INDIVIDUAL EQUIPMENT (81361) 5-77-3201 | KT |

# APPENDIX E

# STOWAGE AND SIGN GUIDE FOR COMPONENTS OF END ITEM, BASIC ISSUE ITEMS, AND APPLICABLE ADDITIONAL AUTHORIZATION LIST ITEMS

## Section I. INTRODUCTION

### E-1 SCOPE.

This appendix shows the locations for stowage of equipment and materiel required to be carried on the self-propelled howitzers.

### E-2 GENERAL.

The following illustrations show the location of stencils, both interior and exterior, used on the howitzer. These signs mark the place where equipment should be stowed. In addition to the location of signs, these guides detail the physical installation and stowage of all Components of End Item (COEI) List, Basic Issue Item List (BIIL), and Additional Authorization List (AAL) items required to be carried on-board the howitzer. These guides also show how to load and stow propellant canisters and how to load and stow projectiles.

## Section II. STENCIL LOCATIONS (CAB AND HULL EXTERIOR)

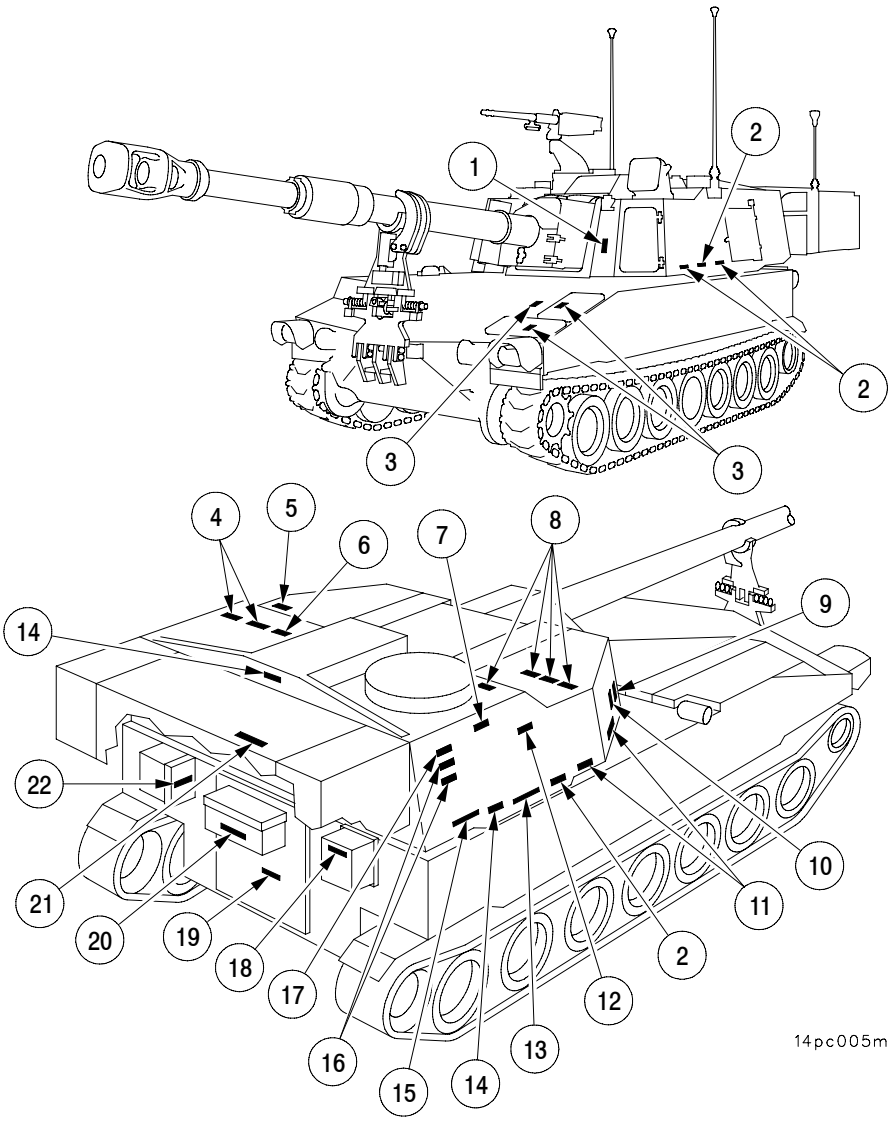


1. Track Fixtures
2. Water Can
3. Track Shoes
4. M16 Ammo
5. Sledge
6. Signal Flares
7. Crowbar
8. .50 Cal. Ammo
9. Pick
10. Mattock
11. Oil Can
12. Cal. .50 Barrel
13. M13 Decontamination Kit
14. Shovel
15. Rammer Shafts
16. Handle
17. Axe
18. Intercom (Hull)
19. Telephone Reel
20. Grenade 40 MM (Hull)
21. Tow Cable
22. Grenade (Hull)

## Section III. STENCIL AND LABEL LOCATIONS (CAB AND HULL INTERIOR)

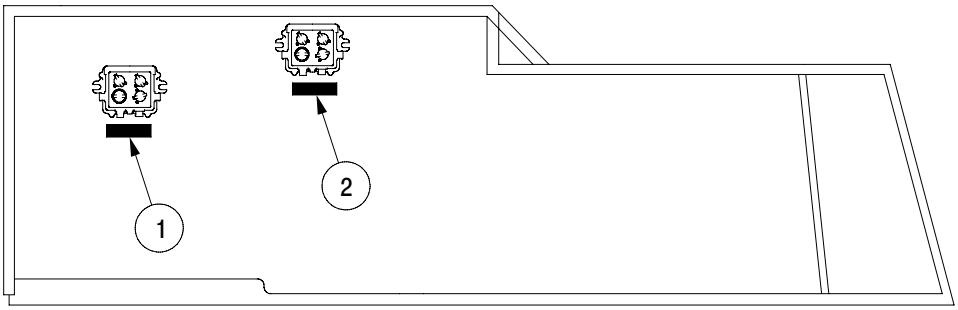


LEFT SIDE

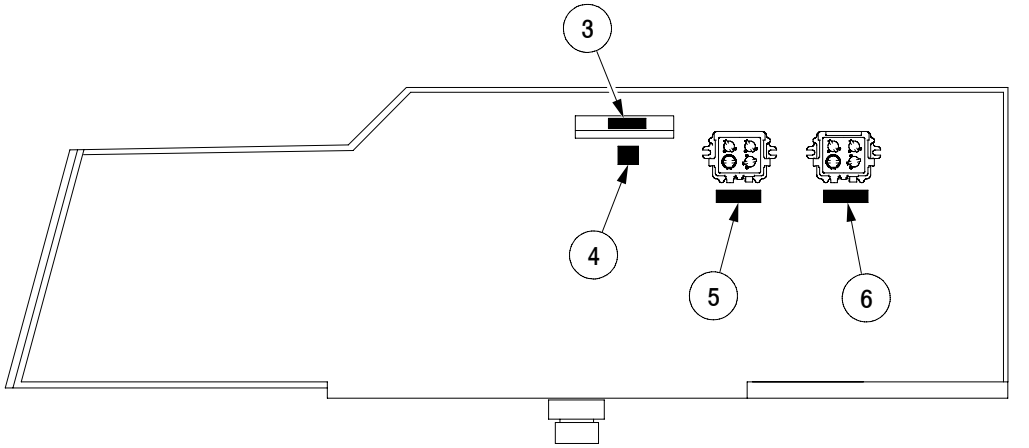


RIGHT SIDE

1. Cannoneer Station
2. Commander Station
3. Caution Communication Label
4. VIS Reference Placard
5. Auxiliary Station
6. Gunner Station

## Section III. STENCIL AND LABEL LOCATIONS (CAB AND HULL INTERIOR) - CONTINUED

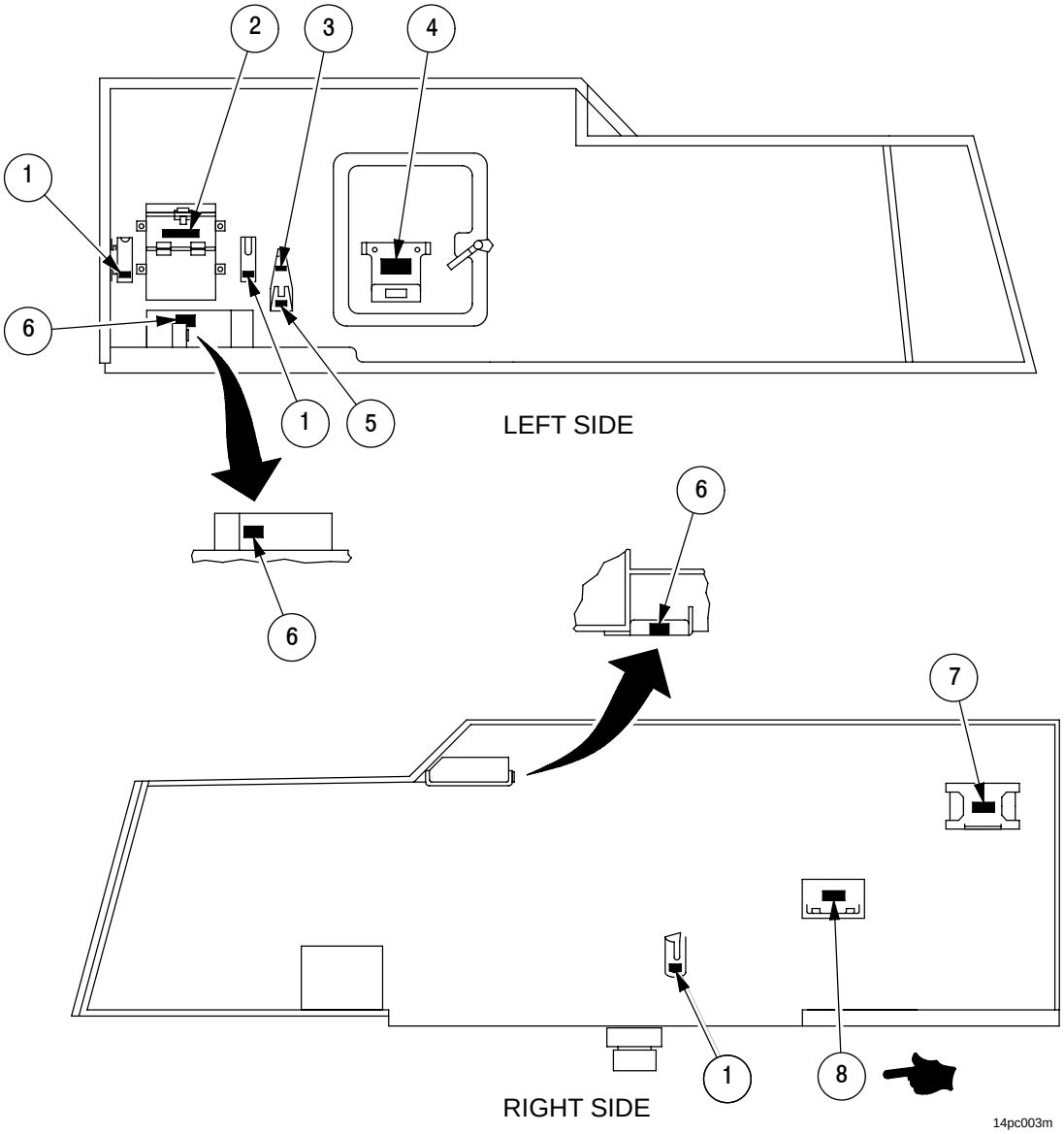


1. Flashlight
2. M27 Periscope
3. M18 Wrench
4. M140A1 Aiming Device and Case
5. M35 Fuze Setter
6. Oddment (Label)
7. First Aid
8. PMVS Stowage (When equipped with PDFCS)

## Section III. STENCIL AND LABEL LOCATIONS (CAB AND HULL INTERIOR) - CONTINUED

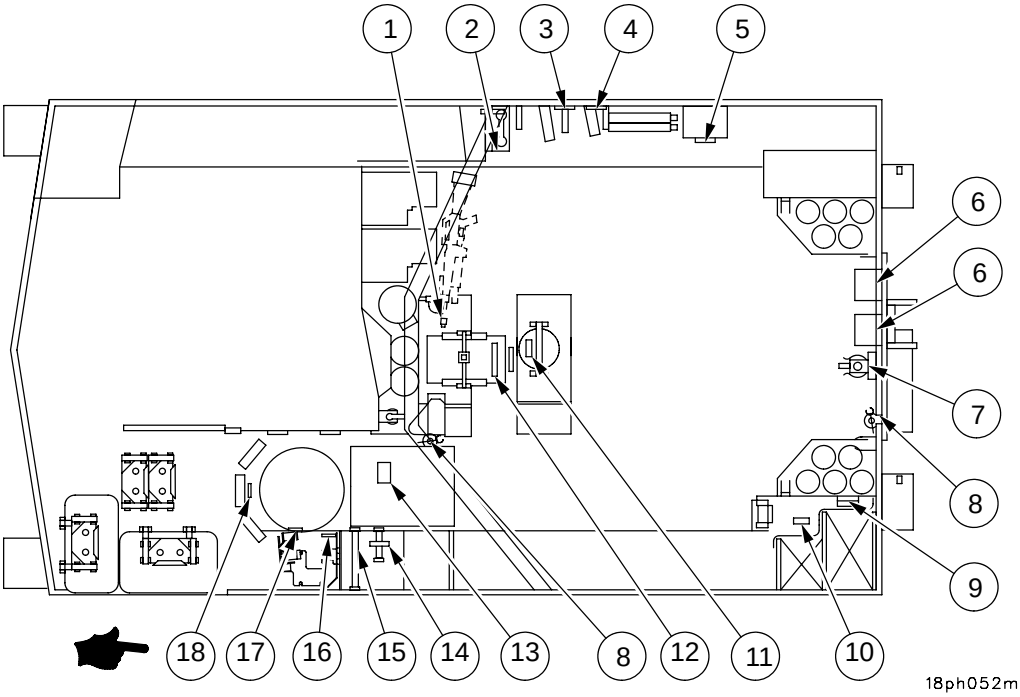


1. M16 Rifles
2. Telephone
3. CLGP Extractors
4. Bore Staff
5. Oddment Tray
6. Fuzes
7. Oil Can
8. Fire Extinguisher
9. NBC Protection
10. Rations
11. Bucket
12. Night Vision Sight
13. Flashlight
14. M256 Detector Kit
15. M280 Decontamination Kit
16. M45 Periscope
17. Night Vision Viewer
18. Night Viewer Installation

## Section IV. STOWED ITEMS - LOCATION INDEX (CAB EXTERIOR)

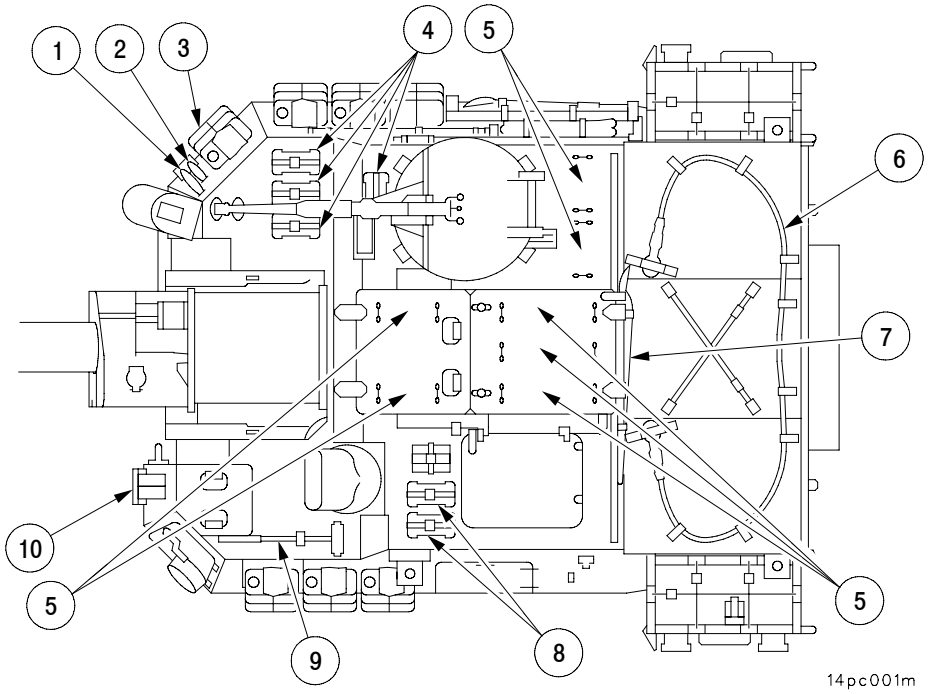


1. Pick
2. Mattock
3. Oil Can
4. .50 Cal. Ammo
5. SPH Crew Personal Gear
6. Tow Cable
7. Shovel
8. M16 Ammo
9. Sledge
10. Track Fixtures

## Section IV. STOWED ITEMS - LOCATION INDEX (CAB EXTERIOR) - CONTINUED

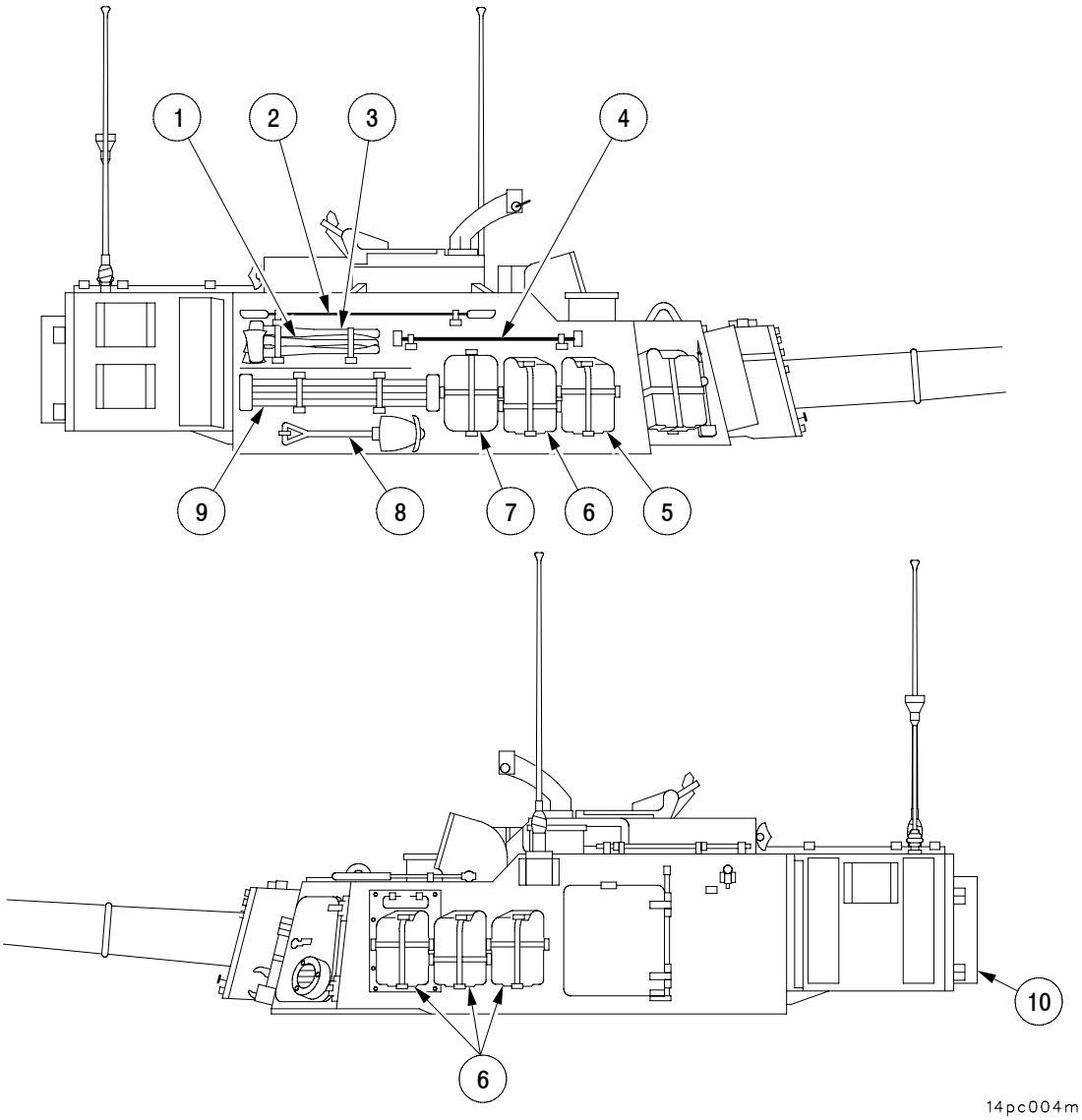


1. Handle
2. Crowbar
3. Axe
4. .50 Cal. Barrel
5. Oil Can
6. Water Can
7. M13 Decontamination Kit
8. Shovel
9. Rammer Staffs
10. AT4 Rocket Launchers (3)

## Section V. STOWED ITEMS - LOCATION INDEX (CAB INTERIOR)

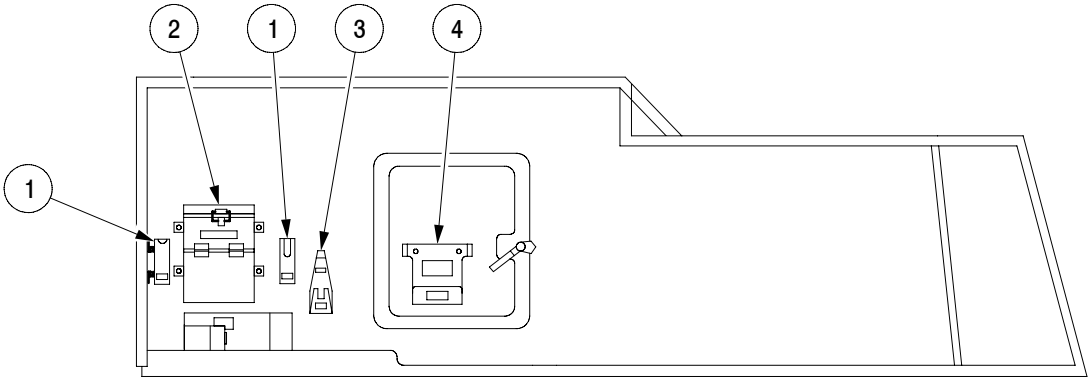


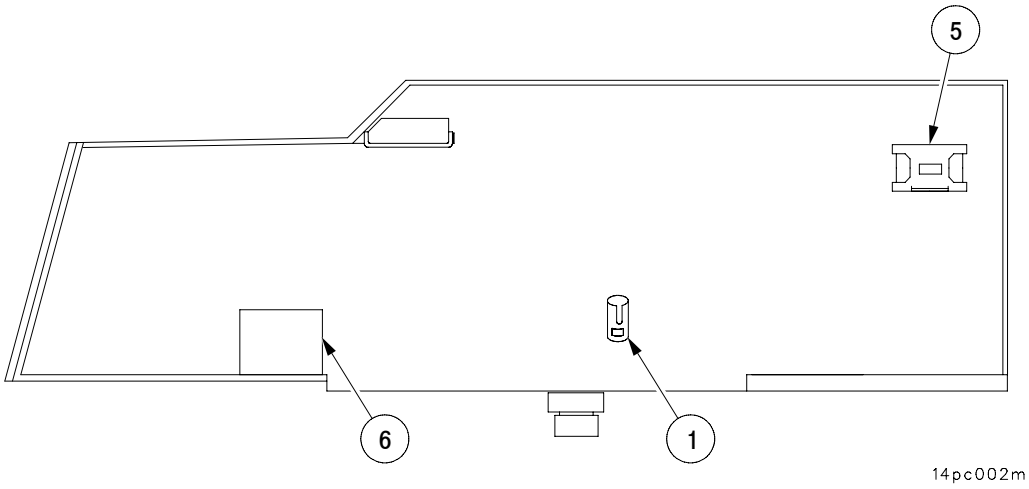


1. Flashlight
2. M27 Periscope
3. M35 Fuze Setter and M18 Fuze Wrench
4. M140/M140A1 Aiming Device
5. First Aid Kit
6. Mounted Water Ration Heater

## Section VI. STOWED ITEMS - LOCATION INDEX (HULL)

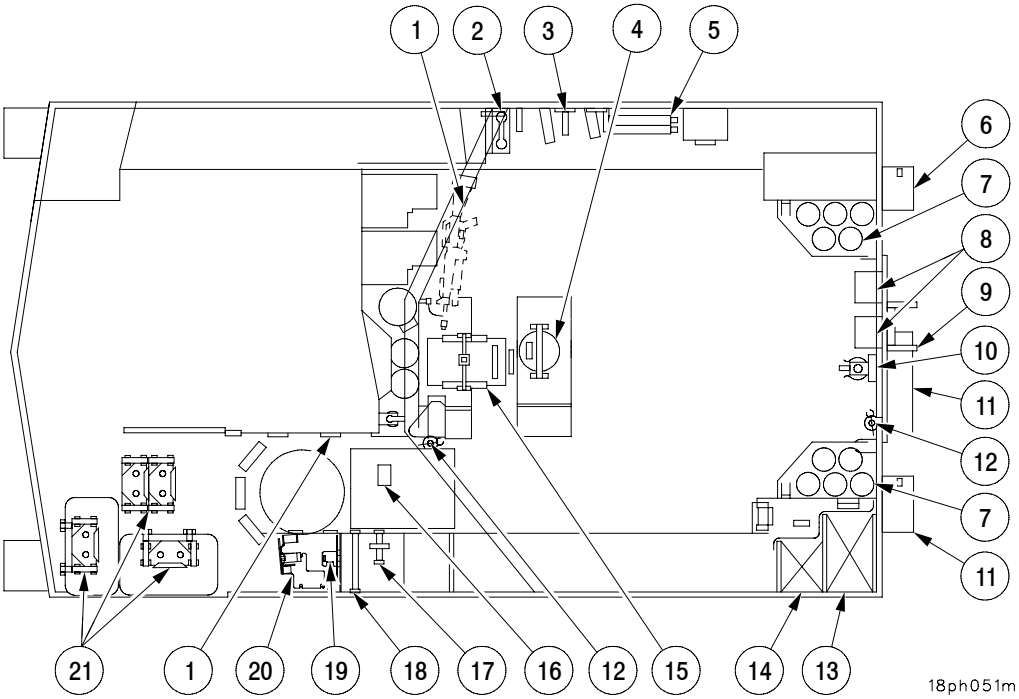


1. M16 Rifles
2. Telephone
3. CLGP Extractors
4. Bucket
5. Bore Staffs
6. Intercom Box
7. Projectile Stowage
8. Fuzes
9. Telephone Reel
10. Oil Can, Hand Pump
11. Grenade Stowage
12. Fire Extinguisher
13. NBC Protection
14. Rations
15. Night Vision Sight
16. Flashlight
17. M256 Detector Kit
18. M280 Decontamination Kit
19. Periscopes (M45)
20. Night Vision Periscope
21. Track Shoes

## Section VII. UPLOADING AND STOWING PROPELLANT CHARGE CANISTERS

## E-3 BUSTLE UPLOADING AND STOWAGE.

a. With all cargo restraining straps removed, stow propelling charge canisters in the sequence and pattern illustrated.

**NOTE**

This stow configuration is based on ammunition mix information that maximizes the number of propelling charges for a given ratio. Many other combinations are possible.

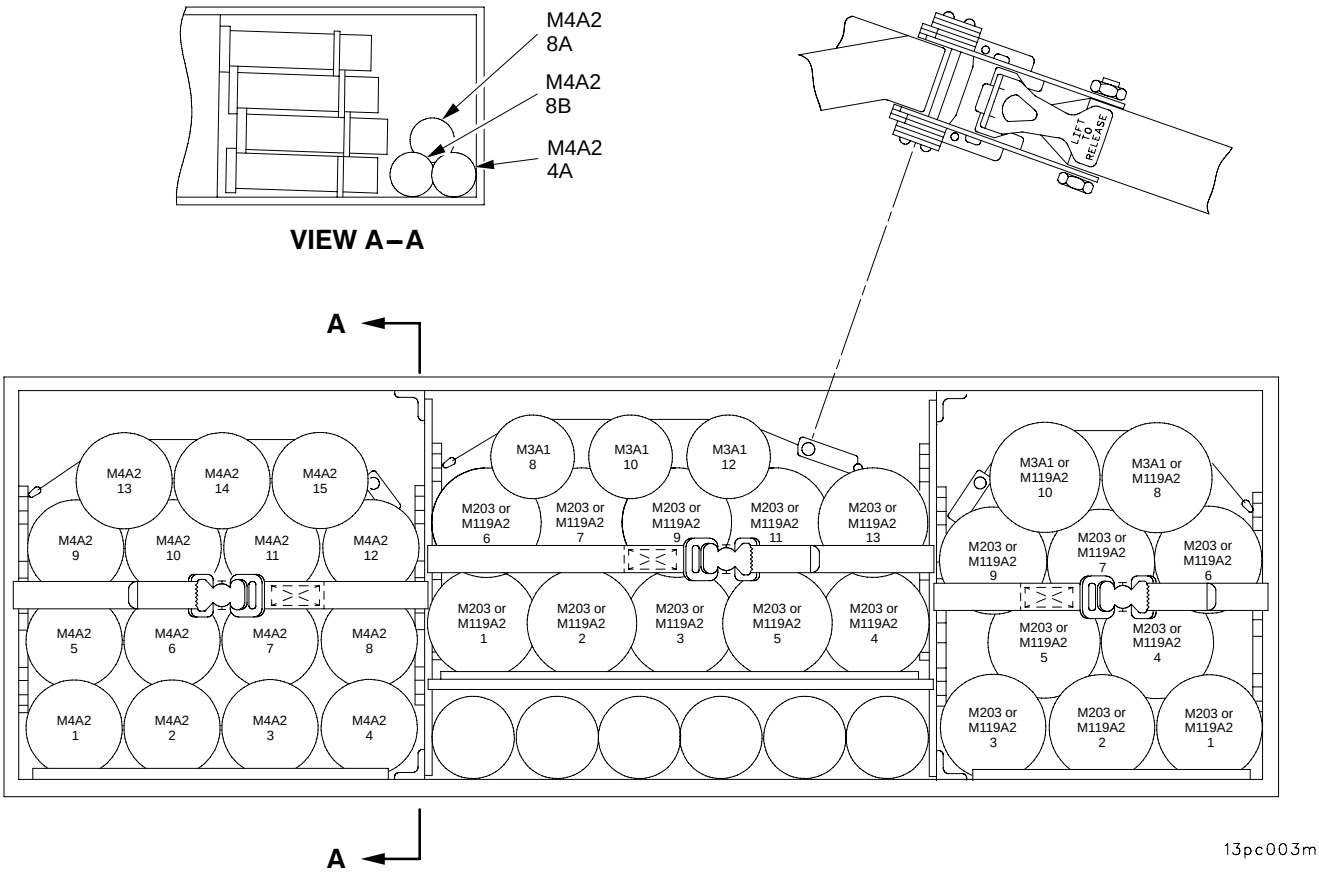

## E-3 BUSTLE UPLOADING AND STOWAGE - CONTINUED

b. Use the following configuration for all M203 or M119 propelling charge stowage.

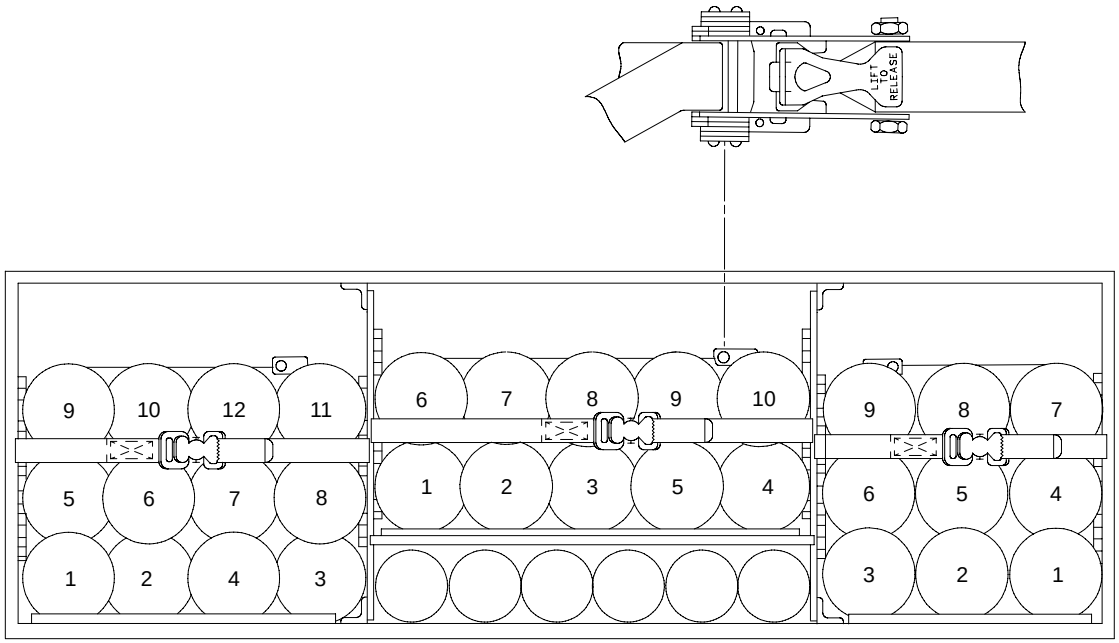


13pc004m

c. Use the following configuration for M203 “square” canister stowage.

**NOTE**

For any other canister stowage configuration, take advantage of the container shape, bustle dividers, and its locking features. Make sure you can unlock the canister caps and remove the propelling charge without having to rearrange/adjust the configuration.

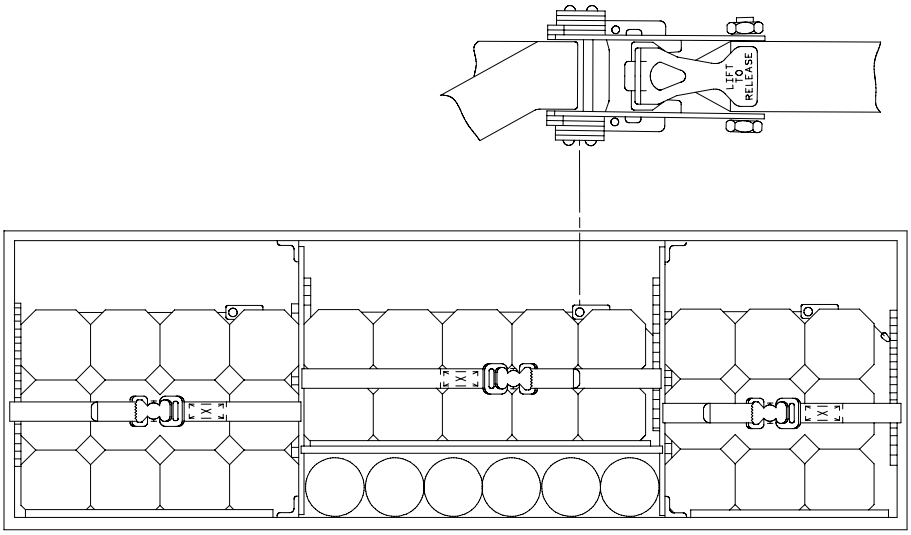


13pc004ma

## E-3 BUSTLE UPLOADING AND STOWAGE - CONTINUED

d. Use the following configuration for all M231 and M232/M232A1 MACS propelling charges stowage.

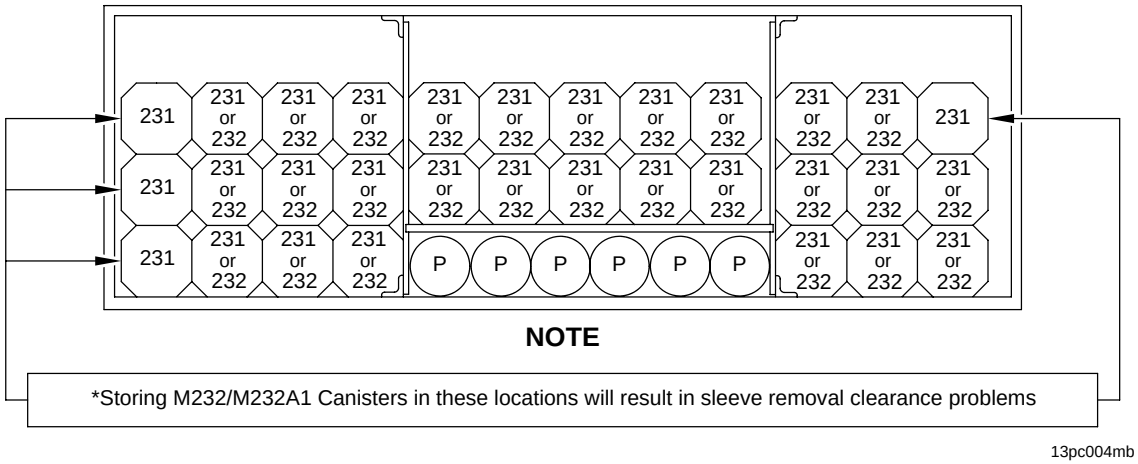


**AMMUNITION KEY** **31 CANISTER CONFIGURATION**

P READY-RACK PROJECTILES
232 - M232/M232A1 MACS
231 - M231 MACS*

d.1 Use the following MACS stowage configuration for M203 and M199A1 square canisters and M4A2 and M3A1 charges.

### NOTE

- Do not attempt to store M203 or M119A1 round-end canisters in vehicles with MACS configuration. Round-end canisters must be stowed on ammunition carrier (PA 37A1 and PA98).
- Only M203 or M119A1 square-end canisters will be stowed in MACS bustle configuration.
- M203 or M119A1 propellant bags may be stored in empty M203 or M119A1 square canisters in MACS bustle configuration.

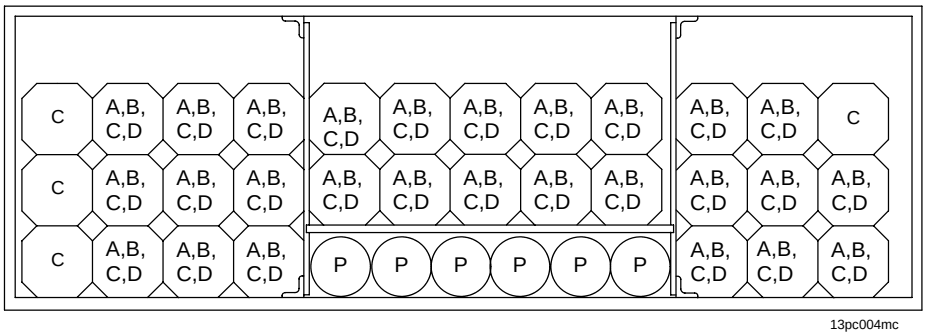


**AMMUNITION KEY** **31 CANISTER CONFIGURATION**

P READY-RACK PROJECTILES
A - M203 SQUARE CANISTER
B - M119A1 SQUARE CANISTER
C - M4A2 WHITE BAG
D - M3A1 GREEN BAG

## E-3 BUSTLE UPLOADING AND STOWAGE - CONTINUED

e. Ensure canisters are properly seated and positioned in compartment, and that their rim stacking will not come loose.

**WARNING**

- Ensure canisters are properly secured before moving the vehicle. Loose canisters in a moving vehicle may result in personnel injury.
- The strap assemblies should be installed after a bustle compartment has been fully uploaded. The straps are interchangeable and their length is adequate for any partial or total load configuration. Ratchetting is possible from either right or left turnbuckle side.

f. Before installing strap assembly (1), lift ratchet release tab and uncoil any residual web from ratchet drum.

**WARNING**

- Check expiration date on straps. Inspect straps for damage and wear (e.g., fraying, cuts). Failure of strap may result in personnel injury.
- Ensure canisters are secured with two restraining straps per compartment. Loss of retention capability may result in personnel injury.

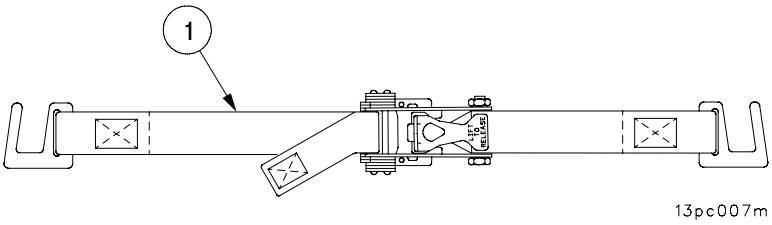


g. Install straps (rear straps first) by hooking slat hook to lowest accessible hole on wall rack. This assures proper web wrap around on corner canisters and effectively transmits web tension. Position ratchet buckle with release tab facing upwards so it is accessible for later use.

## E-3 BUSTLE UPLOADING AND STOWAGE - CONTINUED

h. Pull web handhold end to remove excess length of strap web.

i. Inspect and ensure that both slat hooks at strap ends are fully engaged in bustle wall rack holes.

j. Tighten all cargo restraining strap turnbuckles using canister retaining tool (item 69, Appx. B).

k. Reinspect and ensure that both slat hooks at strap ends are fully engaged in bustle wall rack holes.

l. Before installing strap assembly (1), ensure buckle, spring, and/or retaining pin are not missing or damaged. Check for frays or cuts in webbing that would cause straps to break when tension is applied.

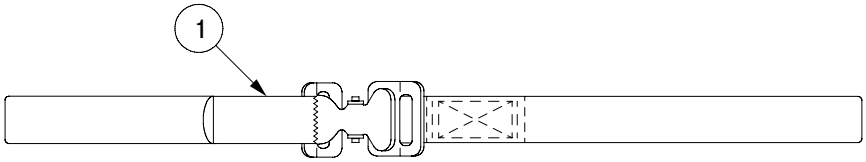


13pc005m

(1) Install straps by squeezing buckle open and sliding strap through buckle.

(2) Slide straps through loops on bustle walls and through buckle.

(3) Pull strap end until all slack is removed and straps are tight.

(4) Ensure buckle holds straps secure.

## Section VIII. UPLOADING AND STOWING PROJECTILES

### E-4 VERTICAL AND HORIZONTAL PROJECTILES STOWAGE.

The maximum on-board stored projectiles is thirty-seven regular and two M712 (Copperheads) for a total of thirty-nine projectiles. The howitzer uses a cab projectile rack, which holds six projectiles, and two hull floor projectile racks each holding five projectiles. Also, in the hull the left and right sponsons are used for stowage of twenty-one projectiles.

**WARNING**

- Ensure projectiles are properly secured before moving vehicle. Loose projectiles in a moving vehicle may result in personnel injury.
- Inspect latches, webbing straps, cradles, and attaching hardware for damage or wear which could result in a projectile becoming loose after being secured.
- M110 series WP projectiles must be stored base down position (vertically) using floor projectile racks. Firing of such projectiles could contribute to inbore explosions or close-in premature malfunctions.
- Stow short based projectile rounds ONLY in floor projectile racks. Do not store long projectile rounds vertically because they would interfere with movement of the cab.
- 155mm projectiles weigh almost 100 lbs (45.4 kg). Be careful when placing ammunition in the hull and bustle to prevent damage to rotating band. Stand projectile up on base.

## E-4 VERTICAL AND HORIZONTAL PROJECTILES STOWAGE - CONTINUED

a. Cab Projectile Rack

**NOTE**

- The cab projectile rack has six retainer assemblies. The projectile storage procedures are identical for all six retainer assemblies.
- Each retainer assembly is held in place by two locking caps.

(1) With retainer assembly (1) removed, ensure cushioning pad (2) is in place.

(2) Place projectile in rack (3).

(3) Position retainer assembly (1) inner ring to projectile being stowed.

(4) Secure retainer assembly (1).

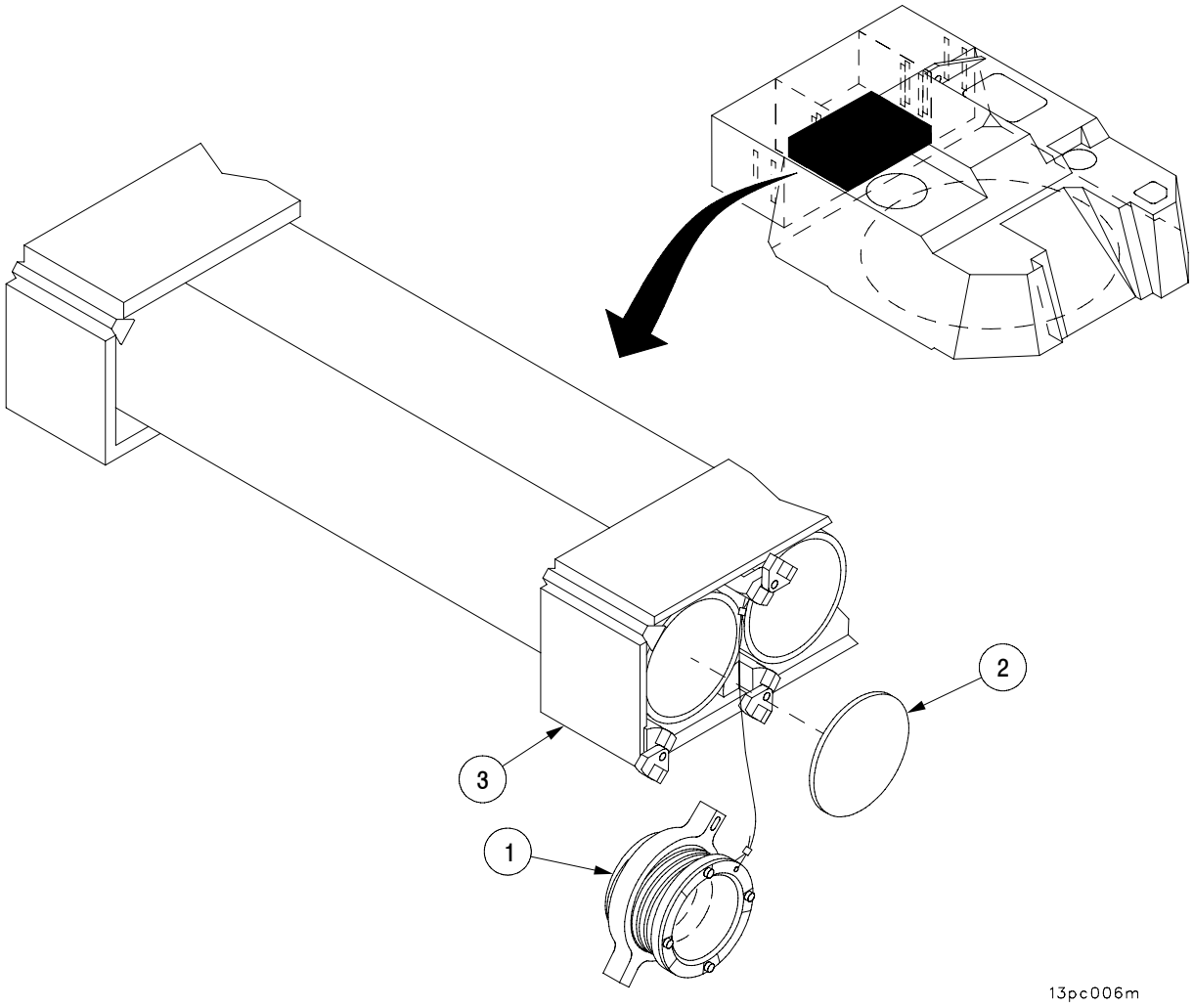

## E-4 VERTICAL AND HORIZONTAL PROJECTILES STOWAGE - CONTINUED

b. Hull Floor Projectile Racks

**WARNING**

Store short based projectile rounds ONLY in floor projectile racks. Do not store long projectile rounds vertically because they would interfere with movement of the cab.

(1) Ensure cushioning pads (1) and bumpers (2) are in place.

(2) Position three projectiles against inner rack (3) and close outer rack (4).

(3) Secure with rack lock assembly (5).

(4) Position two projectiles against outer rack (4).

(5) Weave strap webbing (6) around two projectiles and secure.

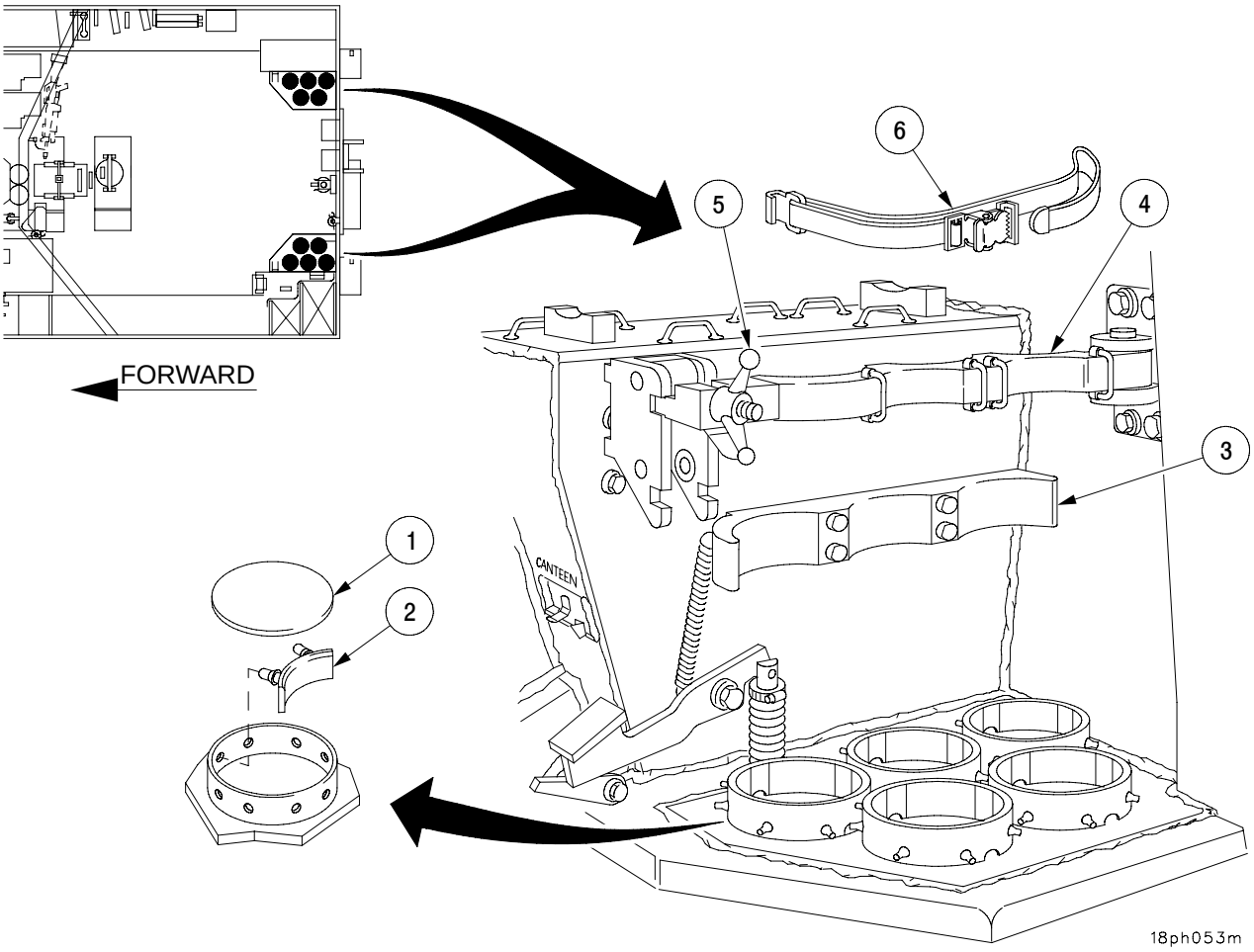

## E-4 VERTICAL AND HORIZONTAL PROJECTILES STOWAGE - CONTINUED

c. Left and Right Sponson Racks

The left and right sponsons uses single and triple cradles, cantilever cradles, strap webbing and latch brackets to store projectiles. For stowage of M712 projectile (copperhead) and extractor assembly see para 5-27.

**NOTE**

The projectile storage procedures are identical for all sponson rack assemblies.

Due to Excalibur projectile size and weight, the vehicle right rear stowage location may be used for smaller projectiles in vehicles with Excalibur configuration.

(1) Place projectile on lower cradle(s) (1).

(2) Position strap webbing (2) across projectile.

(3) Tighten or loosen latch assembly(s) (3) by rotating hook bolts (4).

(4) Secure projectile with strap webbing (2) and latch assembly (3).

(5) Lower upper cradle (5).

(6) Place projectile on upper cradle (5) and secure with strap webbing (2) and latch assembly (3).

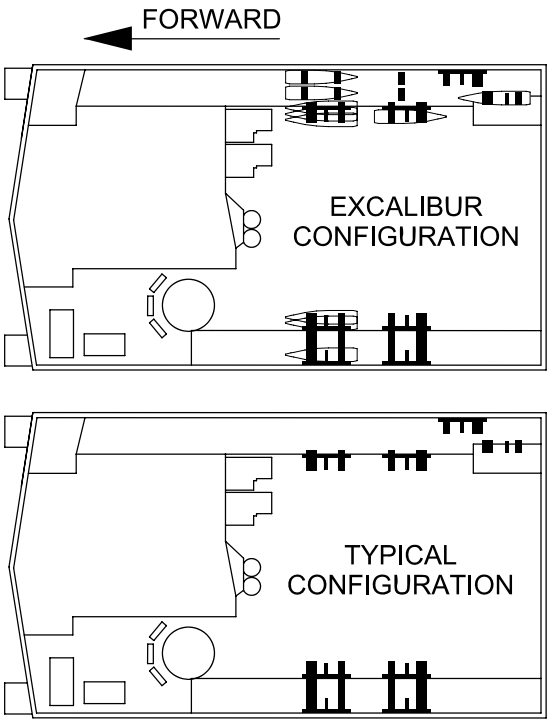


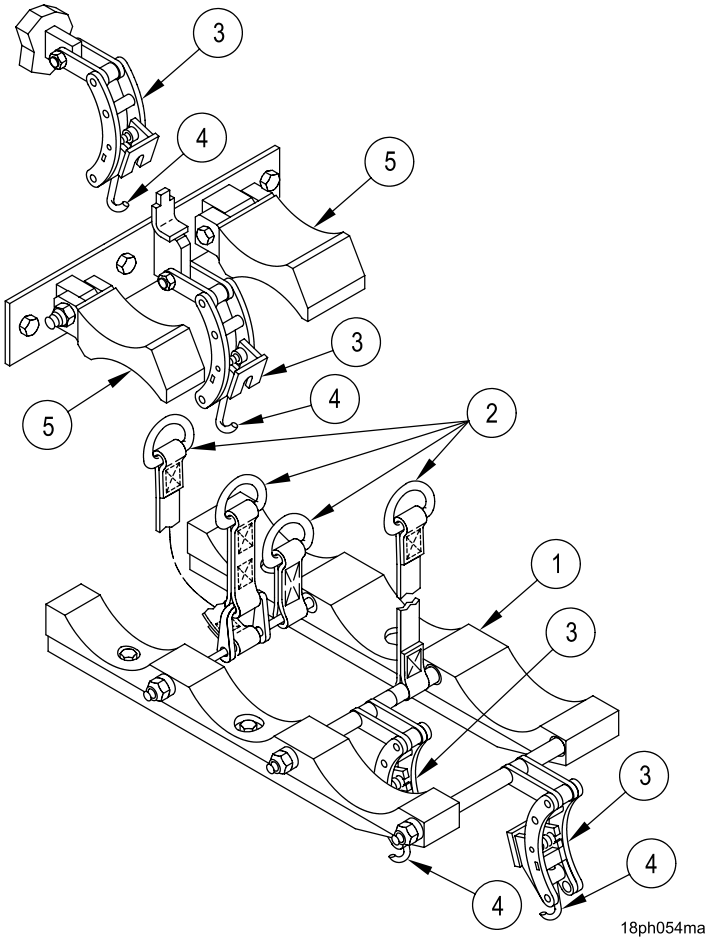

# APPENDIX F

# EMBEDDED TRAINER

## F-1 GENERAL.

The AFCS/PDFCS Embedded Trainer is a built-in training device which uses a specially designed computer program. The program allows the AFCS/PDFCS to operate as a training device. The embedded trainer is designed to improve and maintain the proficiency of operators and crews. The embedded training function provides the capability to train howitzer crews using levels from initial tutorial programs on the operation of the AFCS/PDFCS controls to running a full-scale simulated mission. It is also possible for the instructor to create scenarios for the crew to respond to and to use the embedded trainer to monitor and evaluate their performance.

A specific sequence of actions by the operator is required to enter the embedded training mode. This feature ensures that the training mode cannot be entered accidentally during a mission.

## F-2 LEVELS OF TRAINING.

Five levels of training are available to the user. The Initialize Training option is also available.

### F-2.1 Level 1 Training.

Level 1 is a tutorial program that lists AFCS/PDFCS operating modes and functions, describes keys available on the DU/PDU, general layout of menus, how menus are used, and menu editing. It is designed to lead the user through the step-by-step operation of the AFCS/PDFCS controls. The operation of the various switches and pushbuttons is explained, and then the operator is required to use them to perform tasks called out by the tutorial scenario. The operator reads and follows the instructions that are presented via the display panel of the DU/PDU. The presence of an instructor is not required. After mastery of the controls is obtained, the operator may select a more difficult level. No performance measurement is available at this level.

### F-2.2 Level 2 Training.

Level 2 is also a tutorial program designed to lead the user through the step-by-step operation of the AFCS/PDFCS. The operator uses the skills mastered in Level 1 as a base and applies them to the actual system operation. The program allows an operator who is not familiar with the AFCS/PDFCS to learn the system operation on their own, at their own pace, without the need for an instructor to be present.

# F-2 LEVELS OF TRAINING - CONTINUED

## F-2.2 Level 2 Training - Continued

Level 2 Tutorial provides step-by-step drills. A menu will allow either selection of a specific function for drill or a complete (but simplified) sequence of functions which represent normal AFCS/PDFCS Operation. You may repeat this training level or proceed to next higher (or lower) level. Any data required for input to AFCS/PDFCS (initialization point data, ammo inventory, etc.) will be provided. Performance measurement is not available at this level.

## F-2.3 Level 3 Training.

Unlike Levels 1 and 2, Level 3 is not a tutorial. This level is designed to maintain or improve the performance of a trained operator. The program will run a typical mission scenario. The performance data will be displayed on the display panel of the DU/PDU. This provides a means of scoring individuals who use the embedded training device at this level.

## F-2.4 Level 4 Training.

In Level 4, it is possible for the instructor to modify the scenario by altering destination and target location. The operator is given the opportunity to choose a “move-heavy,” a “shoot heavy,” or a “balanced” scenario. If an instructor is present, the option to introduce simulated system faults is also available. Among the faults that may be introduced are hydraulic system failure, communications failure, navigational system failure, and electrical systems failure.

### F-2.4.1 Level 5 Training

When using the simulated navigation feature during level 5 training all devices (BCS and observers) participating in the training must use the same simulated map area.

## F-2.5 Initialize Training.

This option is not a training level.

Initialize Training allows the operator to make several choices in setting up the training scenario. If there is no instructor present it is possible to select whether or not the weapon will move and to download a scenario or offload data. If an instructor is present, then the scenario may be edited and failures may be introduced, in addition to the items mentioned previously.

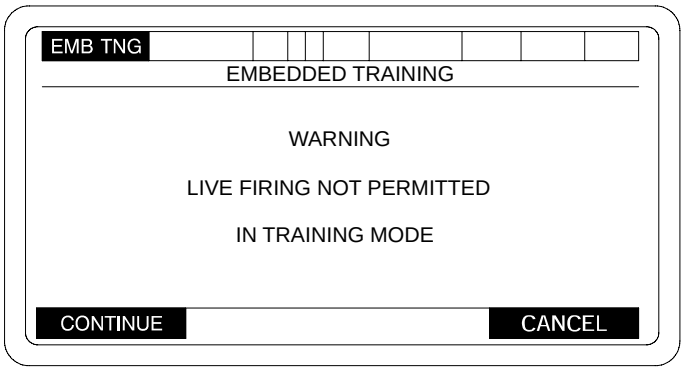


06pc236ma

## F-3 ENTERING TRAINING MODE.

To begin training, proceed as follows:

a. Enter the training mode of operation.

(1) If the AFCS/PDFCS is OFF, ensure vehicle MASTER switch is ON, the PCU/PCU - 2 circuit breakers are in the ON position, then turn the DU/PDFCS power switch ON. Refer to System Power Up, para 2-12.1 for AFCS or 2-15B.1 for PDFCS.

(2) If the AFCS/PDFCS is ON, go to the SETUP AND INFORMATION menu and select SYSTEM RESTART.

First a POWER UP STATUS menu, then a SELECT OPERATIONAL MODE menu, will be displayed.

b. Set DU/PDU training switch to ON (up).

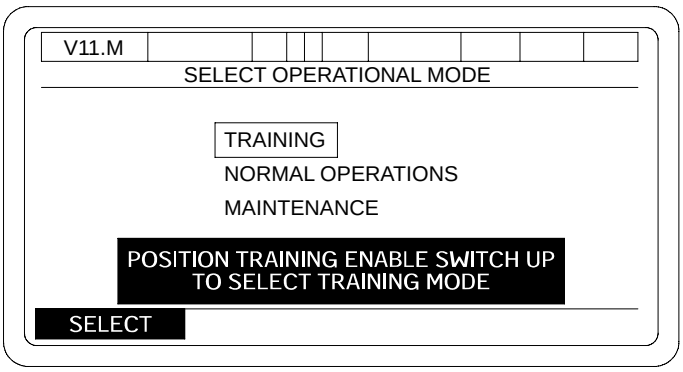


06pc215m

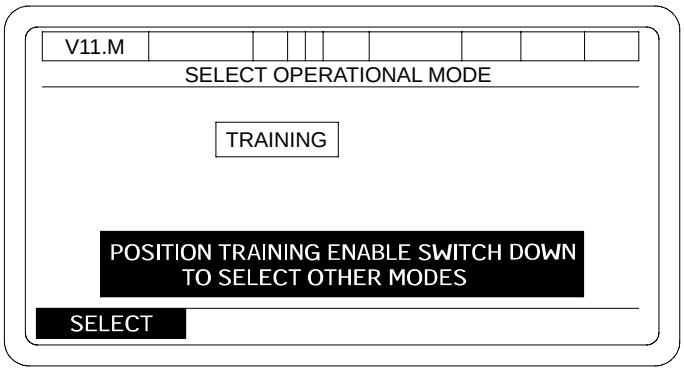


06pc216m

c. Press SELECT key. The EMBEDDED TRAINING MAIN MENU will be displayed.

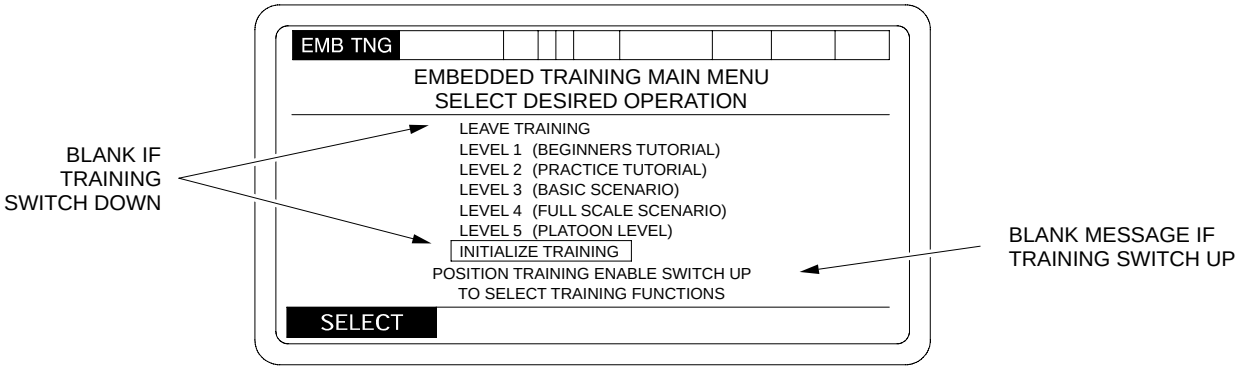


06pc217m

**NOTE**

If ET, BCWC or NAV is not operational, then the following will not be displayed.

LEVEL 3 (BASIC SCENARIO)
LEVEL 4 (FULL SCALE SCENARIO) and
INITIALIZE TRAINING

## F-3 ENTERING TRAINING MODE - CONTINUED

d. Select desired training level or Initialize Training.

(1) Use the arrow keys to box the desired selection.

(2) Press SELECT key.

## F-4 LEVEL OF OPERATION.

Sections F-4 thru F 5.5 explain the operation of Level 1, Level 2, Level 3, Level 4, and Initialize Training.

### F-4.1 Level 1.

Selection of training Level 1 will provide the operator with information concerning the DU/PDU keys, menu, layout, use of menus, and menu editing.

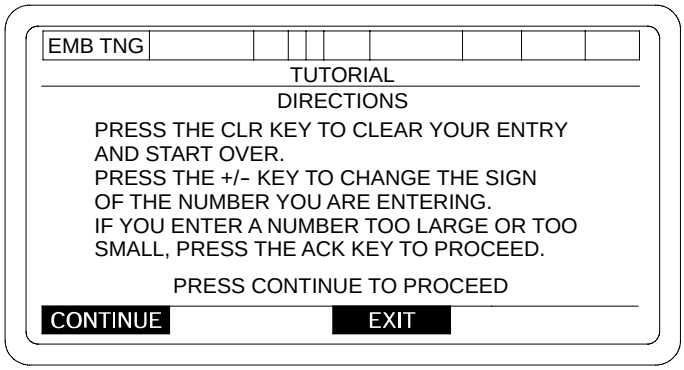


06pc218m

**Example of Level 1 Training**

### F-4.2 Level 2.

Selection of Level 2 will provide the operator with step-by-step drills. A menu will allow either selection of a specific function or drill or a complete (but simplified) sequence of instructions which represent normal AFCS/PDFCS Operation. You will have the option to repeat this training level or proceed to next higher (or lower) level. Any data required for input to AFCS/PDFCS (initialization point data, ammo inventory, etc.) will be provided. Performance measurement is not available at this level.

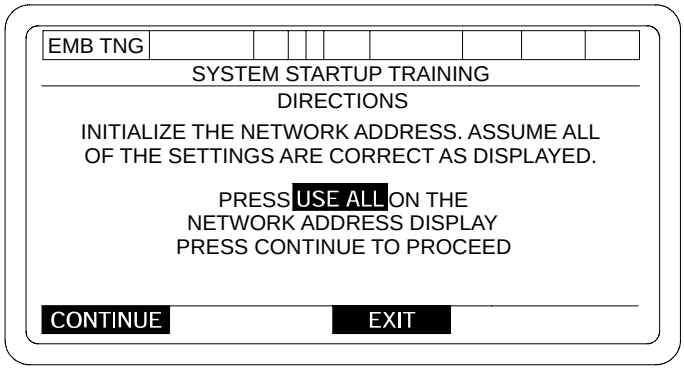


06pc219m

## F-4 LEVEL OF OPERATION - CONTINUED

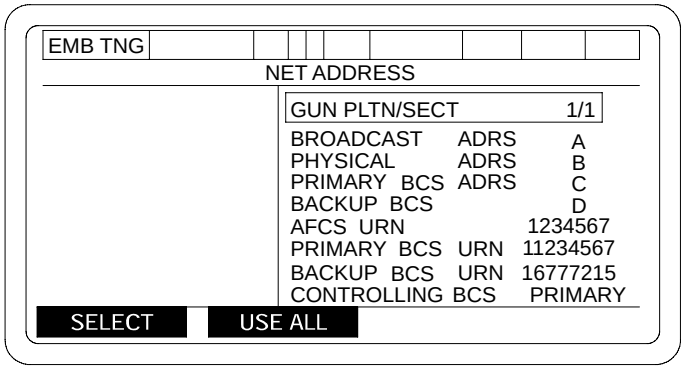


06pc165t

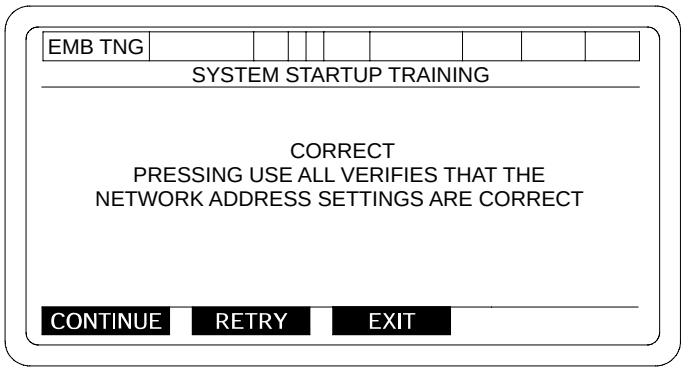


06pc220m

**Example of Level 2 Training**

## F-4 LEVEL OF OPERATION - CONTINUED

### F-4.3 Levels 3 and 4.

If Level 3 is selected you will receive Scenario Training by Event. Each scenario event will be presented to you one at a time with each event completing before next event is presented. Initialization entries will allow selection of scenario type, enable or disable state for faults, and provide a default ammunition inventory. When faults are allowed, each fault will be a separate scenario event. Performance measurement will be provided for this level of training.

To perform Level 3 or Level 4 Training use the following procedure:

a. Use arrow keys on DU/PDU to move box to Level 3 (Basic Scenario) or Level 4 (Full Scale Scenario) on the EMBEDDED TRAINING MAIN MENU.

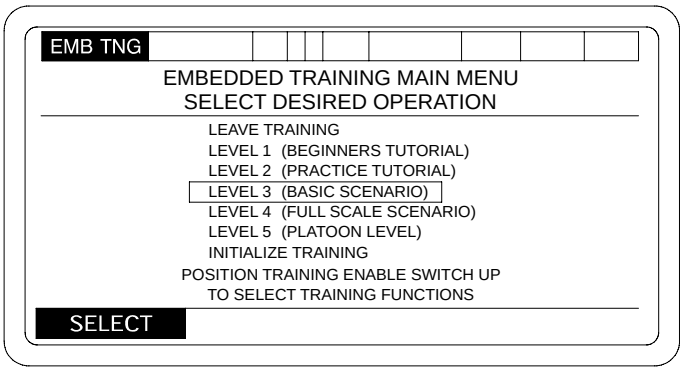


06pc222m

**NOTE**

If ET, BCWC or NAV is not operational, then the following will not be displayed.

LEVEL 3 (BASIC SCENARIO)
LEVEL 4 (FULL SCALE SCENARIO) and
INITIALIZE TRAINING

b. Press key beneath SELECT. This will cause the SELECT METHOD OF SAVING PERFORMANCE DATA menu to appear.

c. Using arrow keys, move box to desired selection.

# F-4 LEVEL OF OPERATION - CONTINUED

## F-4.3 Levels 3 and 4 - Continued

### NOTE

Pressing the key under CANCEL will cause EMBEDDED TRAINING main menu to be displayed

(1) Selection of ADD PERFORMANCE DATA TO EXISTING line will cause data collected during next scenario to be added to data in the file.

(2) Selection of CREATE NEW PERFORMANCE DATA RECORD line will cause data previously collected to be lost.

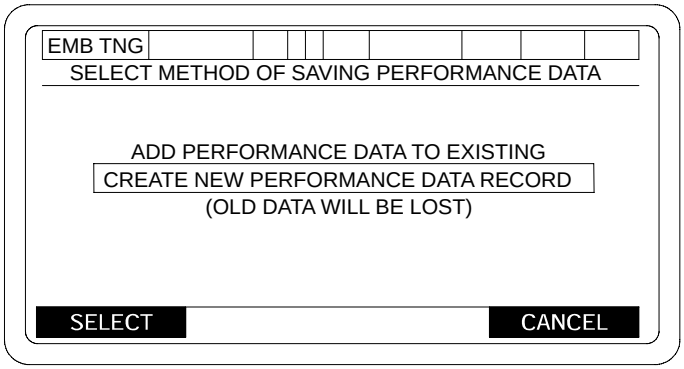


06pc223m

# F-4 LEVEL OF OPERATION - CONTINUED

## F-4.3 Levels 3 and 4 - Continued

d. Press the key under SELECT for desired method of saving performance data. A SELECT SCENARIO TO RUN menu will be displayed.

e. Using arrow keys, move box to desired selection.

**NOTE**

Pressing the key under CANCEL will return the SELECT METHOD OF SAVING PERFORMANCE DATA menu to the display.

(1) A “BALANCED” scenario has a ratio of Fire Missions to Moves of 4/1.

(2) A “SHOOT HEAVY” scenario has a ratio of Fire Missions to Moves of 8/1.

(3) A “MOVE HEAVY” scenario has a ratio of Fire Missions to Moves of 2/1.

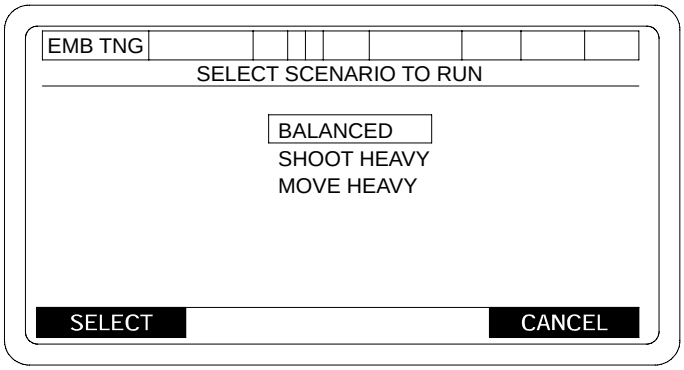


06pc224m

# F-4 LEVEL OF OPERATION - CONTINUED

## F-4.3 Levels 3 and 4 - Continued

f. Press the key under SELECT for desired scenario. After a scenario has been selected, the DEFINE SCENARIO AREAS menu (Grid Zone) will appear.

**NOTE**

Data entered in the DEFINE SCENARIO AREAS menu must indicate the howitzer's current location. It must be the "True Life" location of the howitzer. Enter data prior to changing + or - sign.

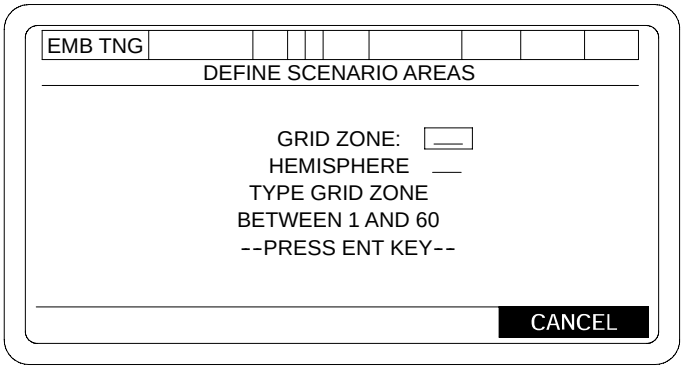


06pc225m

g. Enter desired grid zone and press ENT key on the DU panel/keypad. Select proper HEMISPHERE. Press USE ALL key to display the DEFINE SCENARIO AREAS menu. ■

# F-4 LEVEL OF OPERATION - CONTINUED

## F-4.3 Levels 3 and 4 - Continued

The following prompts will appear on the DEFINE SCENARIO AREAS menu in the block marked “1”:

(1) TYPE EASTING OF SW CORNER BETWEEN 1 AND 999999 -PRESS ENT-

(2) TYPE EASTING OF NE CORNER BETWEEN 1 AND 999999 -PRESS ENT-

(3) TYPE NORTHING OF SW CORNER BETWEEN 0 AND 999999 -PRESS ENT-

(4) TYPE NORTHING OF NE CORNER BETWEEN 0 AND 999999 -PRESS ENT-

Prompts for Grid Zones in Northern Hemisphere

(5) TYPE NORTHING OF SW CORNER BETWEEN 1 AND 10999999 -PRESS ENT-

(6) TYPE NORTHING OF NE CORNER BETWEEN 1 AND l0999999 -PRESS ENT-

Prompts for Grid Zones in Southern Hemisphere

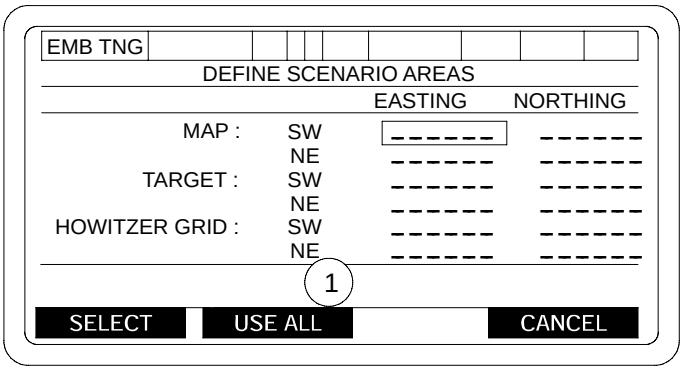


06pc226m

# F-4 LEVEL OF OPERATION - CONTINUED

## F-4.3 Levels 3 and 4 - Continued

h. Enter information for MAP on DEFINE SCENARIO AREAS menu. This is the area in which all geographic references during scenario must lie. It consists of a Grid Zone, Northing and Easting of southwest corner and Northing and Easting of northeast corner. The Spheroid is defaulted to Clark 1866 or Spheroid I.

(1) Using the arrow keys, move box to MAP SW field under Easting on the DEFINE SCENARIO Areas Menu.

(2) Press the key under SELECT, then type in grid coordinates of the easting of the southwest corner of desired operational area and press ENT key on DU/keypad.

(3) Using arrow keys, move box to MAP SW under Northing and press the key under SELECT. Type in Northing grid coordinates of the southwest corner of operational area and press ENT key on DU/keypad.

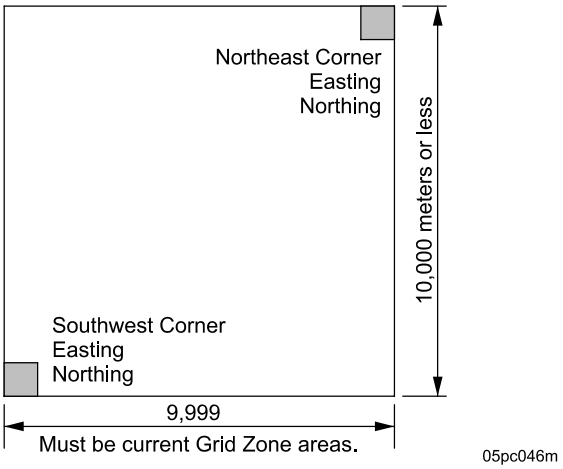


(4) Using the arrow keys, move the box to MAP NE under the Easting on the DEFINE SCENARIO AREAS and press the key under SELECT. Type in the Easting grid coordinates of the Northwest corner of the operational area and press the ENT key on the DU/keypad.

(5) Using the arrow keys on the DU move the cursor to MAP NE under Northing and press the key under SELECT of the DEFINE SCENARIO AREAS menu. Type in Northing of Northeast corner of the operational area and press ENT key on DU/keypad.

## F-4 LEVEL OF OPERATION - CONTINUED

### F-4.3 Levels 3 and 4 - Continued

i. Enter information for TARGET on DEFINE SCENARIO AREAS menu. This the area in which all target locations must lie (within a 10,000 square meter area). The target grid consists of Northing and Easting of southwest corner and Northing and Easting of northeast corner. To enter this data, use same procedures as described for MAP.

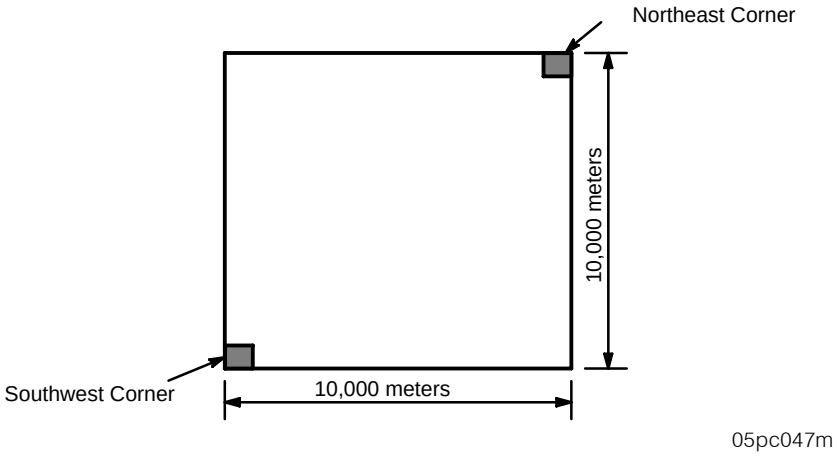


Target Grid

j. Enter information for HOWITZER GRID on DEFINE SCENARIO AREAS menu. This is the area to which all howitzer movements must be confined (10 km or less). It consists of Northing and Easting of southwest corner and Northing and Easting of northeast corner. If howitzer is to remain stationary refer to note below.

**NOTE**

If vehicle is to remain stationary during Level 3 and 4 Training define howitzer area map 1 meter by 1 meter (this will prevent difficulties during a Move Order mission).

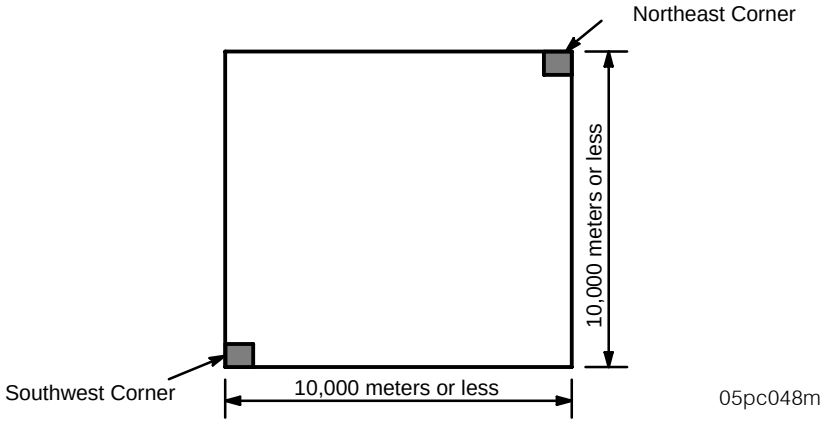


Howitzer Grid

## F-4 LEVEL OF OPERATION - CONTINUED

### F-4.3 Levels 3 and 4 - Continued

**NOTE**

The maximum distance between the farmost corners of the Target Grid and Howitzer Grid must be less than 20 km to develop simulated fire missions (required for real ballistic computation).

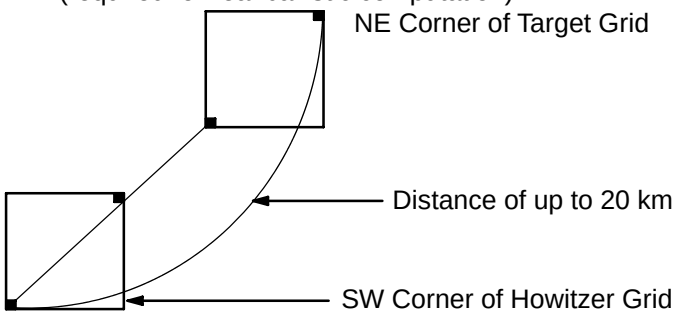


05pc049m

To enter Howitzer grid data use the same procedures described for MAP.

**NOTE**

- If a map value which is not consistent with other values is entered, an Operator Alert, “MAP VALUES INCONSISTENT”, will be displayed.
- If a target or howitzer coordinate which is outside map grid or is inconsistent with other values is entered, an Alert of either “ILLEGAL TARGET AREA” or “ILLEGAL HOWITZER AREA” will be displayed. Press the CONFIRM key for the operator Alert and enter correct/proper data.

k. When all the desired data has been entered on the DEFINE SCENARIO AREAS menus, press the USE ALL key. This will force the AFCS/PDFCS into initialization as in Normal Operations.

l. Initialize AFCS/PDFCS. Initialization of the AFCS/PDFCS is done according to initialization described in Normal Operations with the following exceptions:

- The Gun must be in PLAT/SECT 1/1 (in the NET ADDRESS menu).
- “True Life” data required for NAV RESTART (initialization point, grid and grid zone).
- AZIMUTH OF FIRE data in SECTOR OF FIRE menu must be the rough azimuth from Howitzer Grid Southwest Corner to Target Grid Southwest Corner as shown in illustration.

## F-4 LEVEL OF OPERATION - CONTINUED

### F-4.3 Levels 3 and 4 - Continued

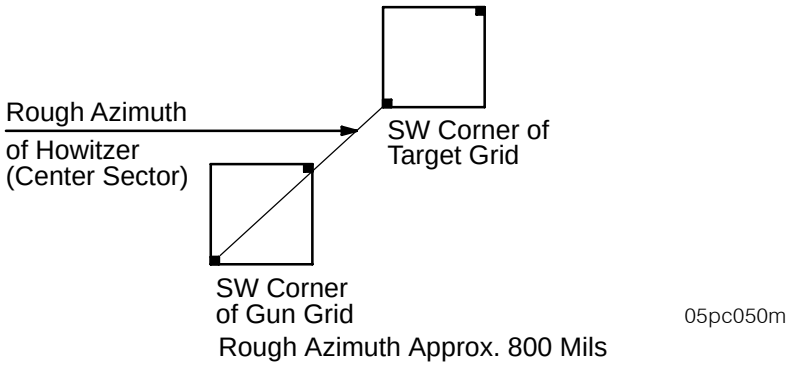


Other initialization data to be provided by the instructor.

m. Enter Embedded Trainer Ammunition Inventory information.

To use the default ammunition inventory, perform the following procedure while doing the AFCS/PDFCS initialization:

Embedded Trainer Ammunition Inventory - Basic Load

PROJECTILES

| | | |
|---|---|---|
| M483A1 (DPICM) | 20 | Total of 39 |
| M107 (HE) | 10 | |
| M825 (SMOKE) | 03 | |
| M549A1 (RAP) | 02 | |
| M485 (ILLUM) | 02 | |
| M712 (CPH) | 02 | |

PROPELLANTS

| | | |
|---|---|---|
| M4A2 | 15 | Total of 56 |
| M119A2 | 15 | |
| M203 | 08 | |
| M3A1 | 18 | |

FUZES

| | | |
|---|---|---|
| M577 (MT) | 28 | Total of 50 |
| M582 (MTSQ) | 06 | |
| M78 (CP) | 04 | |
| M557 (PD) | 12 | |

# F-4 LEVEL OF OPERATION - CONTINUED

## F-4.3 Levels 3 and 4 - Continued

(1) On the SETUP AND INFORMATION menu box AMMO INVENTORY; then press the key under SELECT. An INVENTORY MANAGEMENT menu will be displayed.

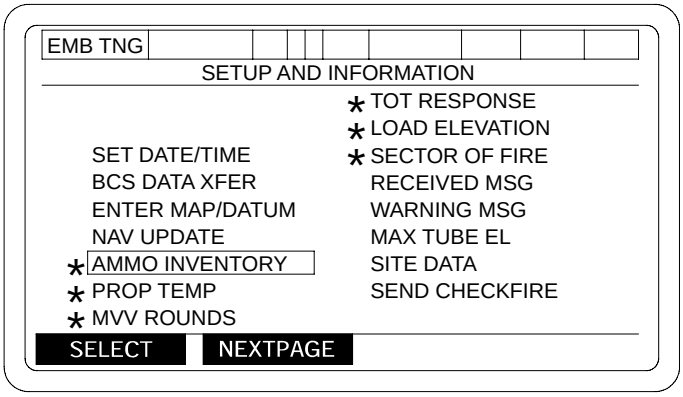


06pc227m

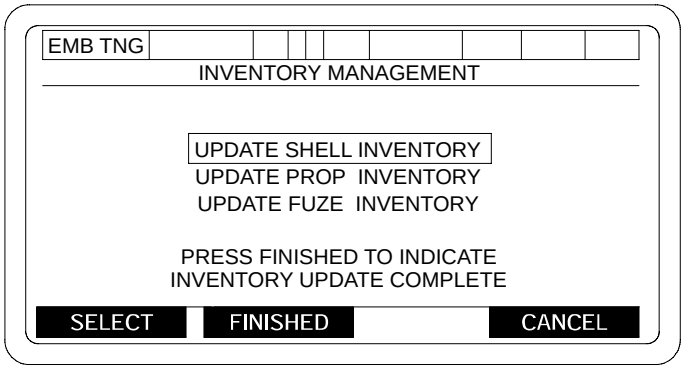


06pc228m

(2) Press the key under FINISHED. The SETUP AND INFORMATION menu will be displayed. This action will complete the AFCS/PDFCS initialization process (all asterisked items must be initialized).

# F-4 LEVEL OF OPERATION - CONTINUED

## F-4.3 Levels 3 and 4 - Continued

n. Store default ammo inventory. When Initialization is complete (alignment countdown finished), press CANCEL key in the SETUP AND INFORMATION menu to display a MOVE ORDER in level 3 or SECTION IN ORDER at INITIALIZATION POINT in level 4.

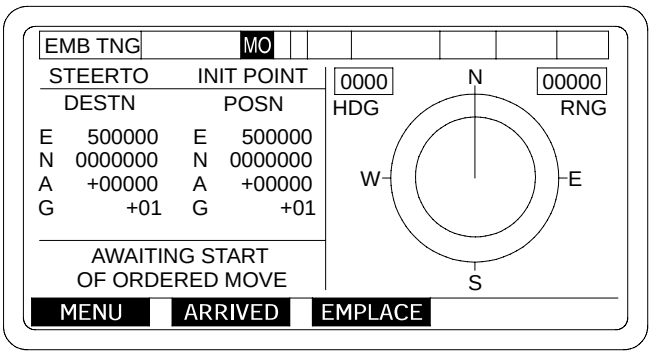


06pc229m

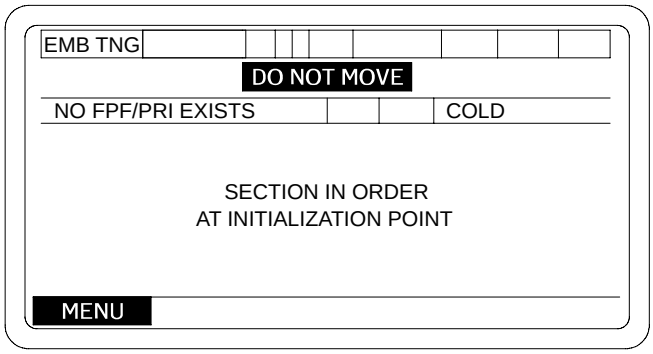


06pc230m

(1) To store the default Ammo Inventory, press the menu key to display SETUP AND INFORMATION menu.

# F-4 LEVEL OF OPERATION - CONTINUED

## F-4.3 Levels 3 and 4 - Continued

(2) Move the box to AMMO INVENTORY and press the key under SELECT. An INVENTORY MANAGEMENT menu will be displayed.

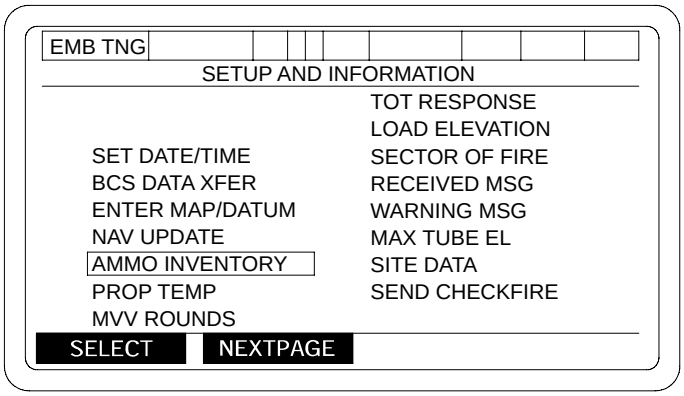


06pc231m

(3) Using the arrow keys, move box to EDIT BCS PROVIDED on the INVENTORY MANAGEMENT menu; then press the key under SELECT. Another INVENTORY MANAGEMENT menu will be displayed.

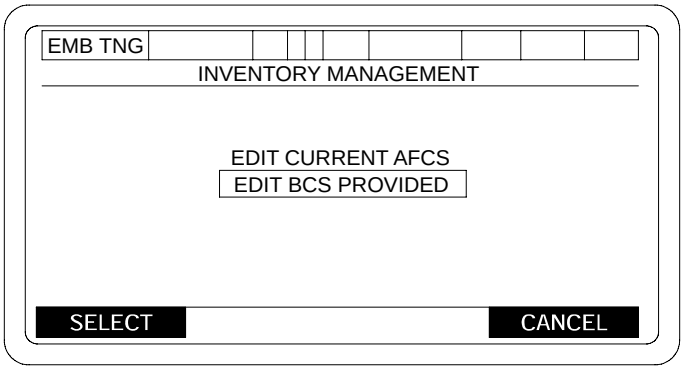


06pc232m

## F-4 LEVEL OF OPERATION - CONTINUED

### F-4.3 Levels 3 and 4 - Continued

(4) Press the key under FINISHED on this INVENTORY MANAGEMENT menu to store the default Ammo Inventory into the trainer.

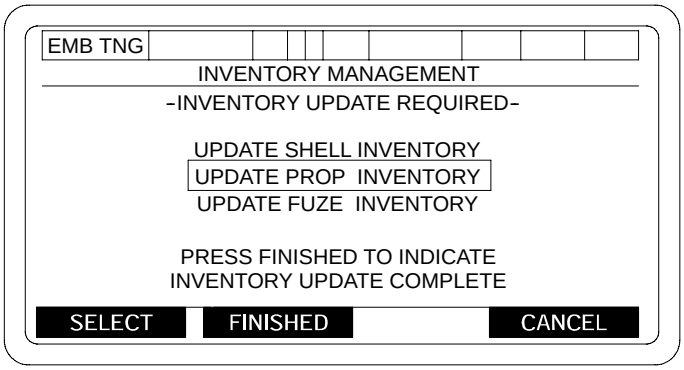


06pc233m

o. To exit the training mode while in a scenario, switch the trainer switch on the DU panel/keypad to the off position. The EMBEDDED TRAINING MAIN MENU will be displayed.

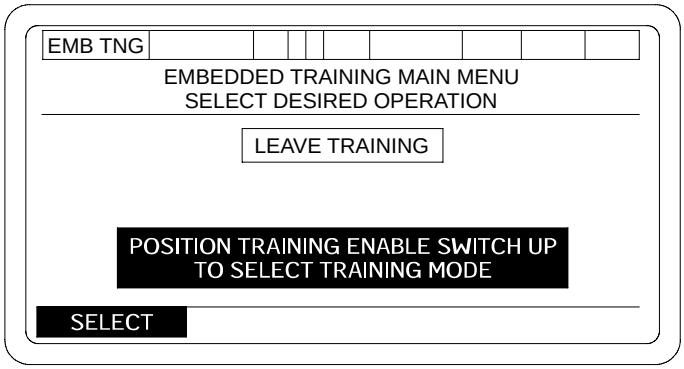


06pc234m

p. Press the key under SELECT. The system will automatically do a restart and return to the SELECT OPERATIONAL MODE menu.

## F-5 INITIALIZE TRAINING OPTION

Initialize Training will allow selection of scenario type, enable/disable state for faults, and provide a default Ammunition Inventory. If faults are allowed, faults will be inserted into the scenario sequence to emulate degraded system operation. This will allow you to respond to faults as you would in a “Real World” situation. Additional events will be enabled in scenarios to emulate interruption of normal function/task flow. Performance measurement will be provided for this level of training. To use the Initialize Training option perform the following procedures:

a. Use the arrow keys to move box to INITIALIZE TRAINING on the EMBEDDED TRAINING MAIN Menu.

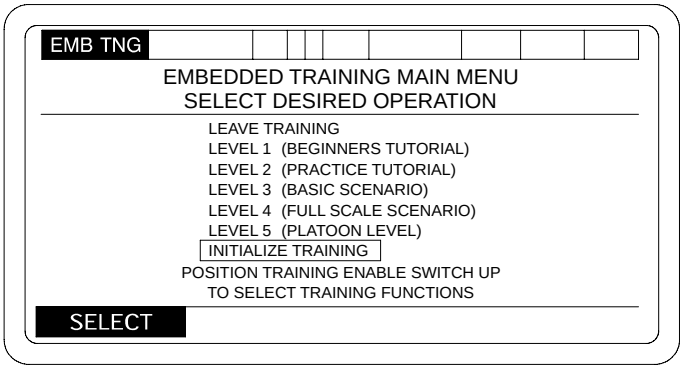


06pc235m

**NOTE**

If ET, BCWC or NAV is not operational, then the following will not be displayed.

LEVEL 3 (BASIC SCENARIO)
LEVEL 4 (FULL SCALE SCENARIO) and
INITIALIZE TRAINING

b. Press key under SELECT. An INSTRUCTOR ENTRY menu will be displayed.

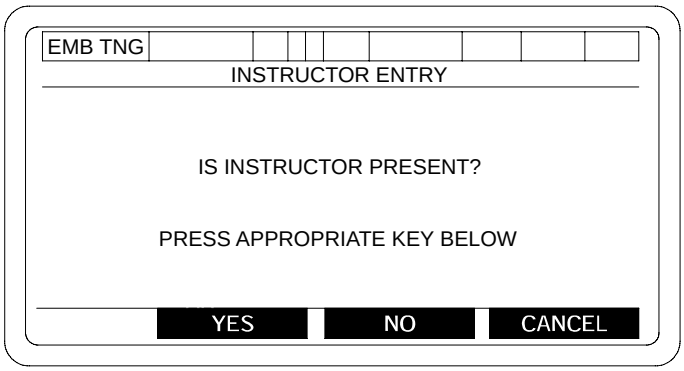


06pc236m

c. Press either the YES or NO key. This will cause a WEAPON MOVEMENT ENTRY menu to be displayed.

## F-5 INITIALIZE TRAINING OPTION - CONTINUED

d. The WEAPON MOVEMENT ENTRY menu allows you to select whether the weapon will move during the training scenario or remain stationary. One of the 2 menus shown will appear, depending upon whether the weapon is in the enable or disable mode.

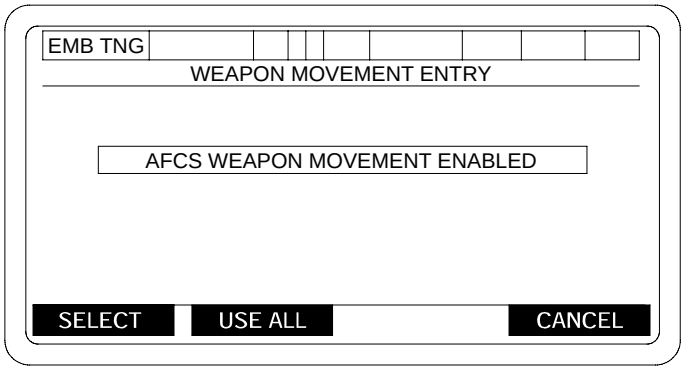


06pc237m

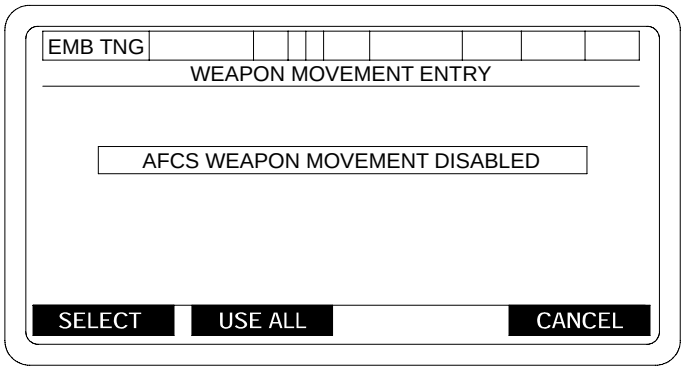


06pc238m

## F-5 INITIALIZE TRAINING OPTION - CONTINUED

e. To change from enabled to disabled or from disabled to enabled, press the key under SELECT. One of the following menus will be displayed. To change the Weapon Movement, press the key under YES. If a change is not desired at this time press the key under NO.

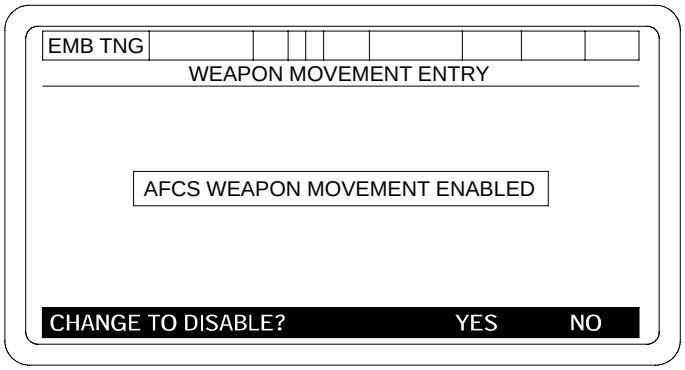


06pc239m

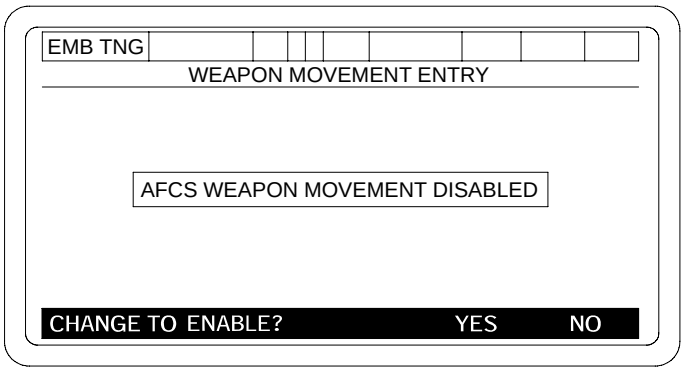


06pc240m

## F-5 INITIALIZE TRAINING OPTION - CONTINUED

f. To enter the Weapon Movement Entry, press key under USE ALL. A SELECT TRAINING FUNCTION menu will be displayed.

**NOTE**

The following options on the SELECT TRAINING FUNCTION menu will not be available if NO was pressed on the INSTRUCTOR ENTRY menu.

ALTER EXISTING SCENARIO
SELECT SCENARIO OPTIONS
EDIT FAILURES

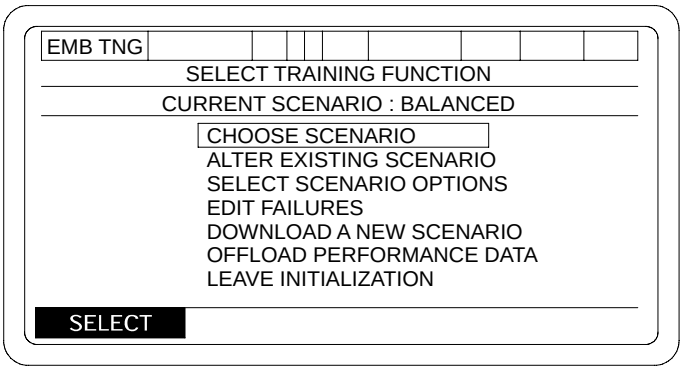


06pc241m

### F-5.1 Scenario.

F-5.1.1 Choose Scenario.

This option allows the operator to choose the scenario that he wants to alter/change.

a. Using the arrow keys, move box to CHOOSE SCENARIO on the SELECT TRAINING FUNCTION menu and press the key under SELECT. A SELECT SCENARIO TO RUN menu will be displayed.

# F-5 INITIALIZE TRAINING OPTION - CONTINUED

## F-5.1 Scenario - Continued

b. Move box using arrow keys on DU/keypad to the desired scenario to be changed, then press SELECT key. This will cause the SELECT TRAINING FUNCTION menu to be redisplayed.

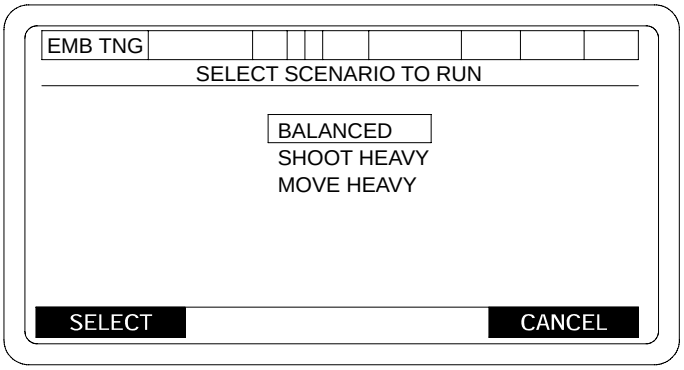


hipc4106

F-5.1.2 Alter Existing Scenario.

This option allows modification of the current scenario. The CURRENT SCENARIO shown in the SELECT TRAINING FUNCTION menu is the one to be modified.

a. Using the arrow keys on the DU/keypad, move the box to ALTER EXISTING SCENARIO, then press the key under SELECT. A SCENARIO SUMMARY menu will be displayed.

SCENARIO SUMMARY Menu

b. The SCENARIO SUMMARY menu allows a single step in the scenario to be changed. To accomplish this, use the arrow keys to move the cursor to the desired step to be changed and press the key under SELECT. An ALTER SCENARIO LOCATION menu will be displayed.

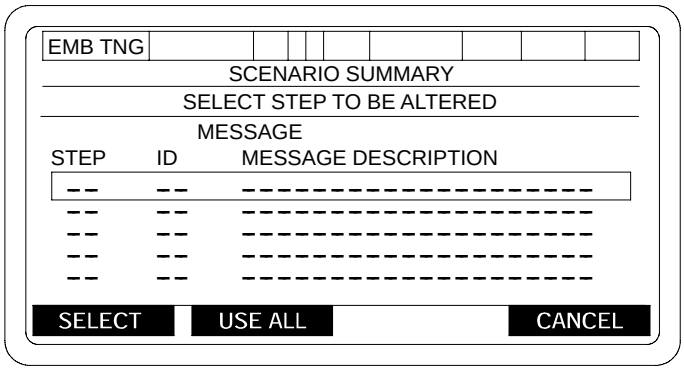


06pc242m

# F-5 INITIALIZE TRAINING OPTION - CONTINUED

## F-5.1 Scenario - Continued

ALTER SCENARIO LOCATION Menu

**NOTE**

The LOCATION OFFSET will be Easting and Northing in meters, measured from southwest corner of appropriate area; Target grid or Howitzer grid depending on whether Message ID is for Fire Mission or Move Mission. If Message ID is for neither, then LOCATION OFFSET will have no meaning for that step.

c. To alter a location, move cursor to EASTING or NORTHING and press the key under SELECT, type in desired offset (0 - 9999 meters) and press ENT key on DU/keypad. When both desired offsets have been entered, press key under USE ALL. The SCENARIO SUMMARY menu is then displayed. When all desired steps of the SCENARIO SUMMARY menu have been changed/altered, press the USE ALL key. This will cause the SELECT TRAINING FUNCTION menu to be redisplayed.

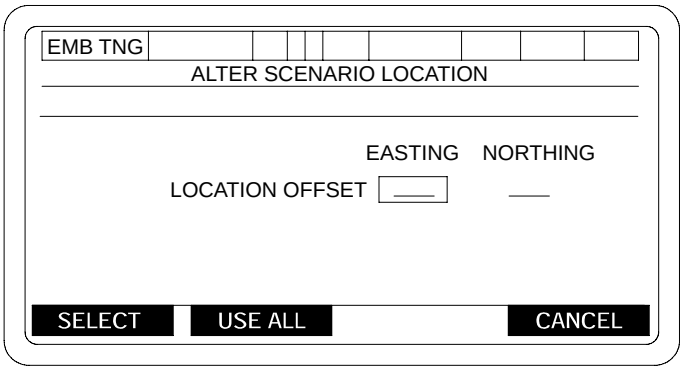


06pc243m

# F-5 INITIALIZE TRAINING OPTION - CONTINUED

## F-5.1 Scenario - Continued

F-5.1.3 Select Scenario Options.

This menu allows the operator to select options in a scenario. Use the following steps.

a. Move box to SELECT SCENARIO OPTIONS on the SELECT TRAINING FUNCTION menu and press the key under SELECT to display the SELECT SCENARIO OPTIONS menu.

b. The Scenario Options will be listed as “YES” or “NO” when the menu appears on the display. To make a change, use the arrow keys to move box to the desired line and press the SELECT key.

   A prompt will appear (change to YES - YES/NO or change to NO - YES/NO). Make the desired choice. That choice will then appear on the menu.

c. When desired options have been changed, press the key under USE ALL. USE ALL will enter any changes and return you to the SELECT TRAINING FUNCTION menu.

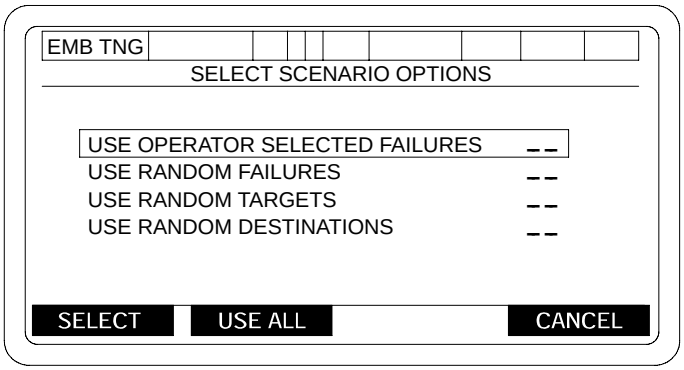


06pc244m

F-5.1.4 Edit Failures.

This option permits the operator to change or define a failure operation in a scenario. Perform the following steps to accomplish failure changes.

a. Using the arrow keys move the box to EDIT FAILURES on the Select Training Function menu and press the key under SELECT. A FAILURE OPERATIONS menu will be displayed.

# F-5 INITIALIZE TRAINING OPTION - CONTINUED

## F-5.1 Scenario - Continued

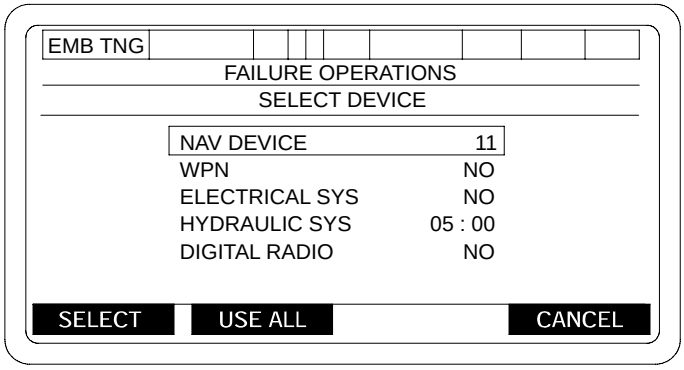


06pc082m

**NOTE**

To the right of each device shown in the menu there may appear the word “NO” if no failure for the device is desired, a time if a time failure has been selected or a number between 1 and 99 if a step failure has been selected.

b. FAILURE OPERATIONS menu allows the operator to program the failures that will occur during the training scenario. To select a device/system, use the arrow keys to move box to selection, then press the key under SELECT. The SELECT TIME OR STEP ACTIVATION menu will be displayed. USE OPERATOR SELECTED FAILURES (YES) on the SELECT SCENARIO OPTIONS menu must have been selected or this step will not work.

# F-5 INITIALIZE TRAINING OPTION - CONTINUED

## F-5.1 Scenario - Continued

c. The SELECT TIME OR STEP ACTIVATION menu allows the operator to have the selected device fail at a particular time in the scenario or have the device fail at a particular step in the scenario.

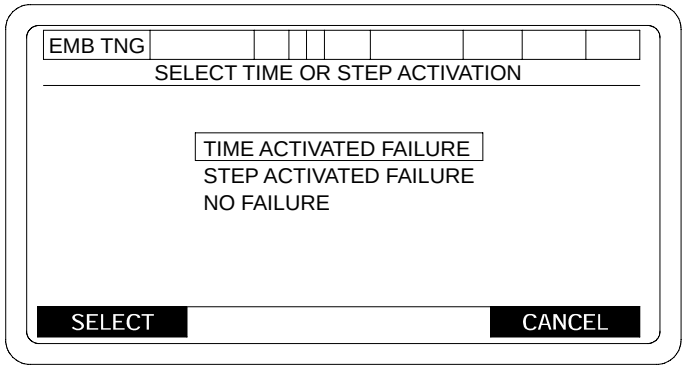


06pc245m

For a time failure, use the arrow keys to move the cursor to TIME ACTIVATED FAILURE on the SELECT TIME OR STEP ACTIVATION menu and press the key under SELECT. A TIME OF FAILURE menu will appear on the display.

Type in the time for the failure to occur and press the ENT key. This will return the FAILURE OPERATIONS menu to the display and the time entered will appear to the right of the device previously selected.

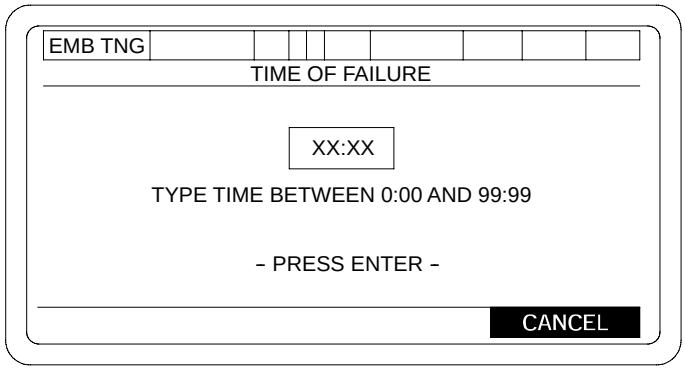


06pc246m

d. For a Step Failure move the cursor to STEP ACTIVATED FAILURE on the SELECT TIME OR STEP ACTIVATION menu and press the key under SELECT. A STEP OF FAILURE menu will be displayed.

# F-5 INITIALIZE TRAINING OPTION - CONTINUED

## F-5.1 Scenario - Continued

Type in the step where the failure is to occur and press the ENTER key. This will return the display to the FAILURE OPERATIONS menu and the step number you entered will appear to the right of the device you previously selected.

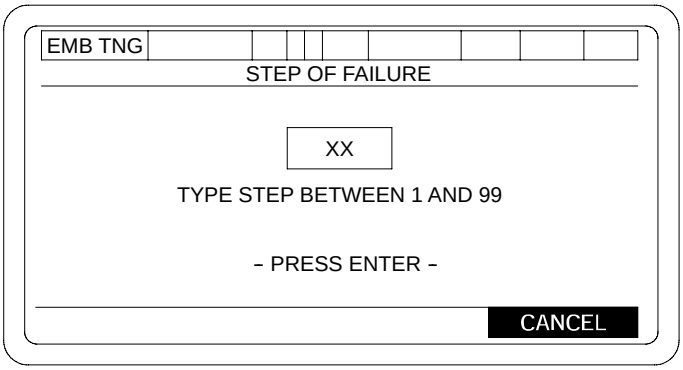


06pc247m

e. If NO FAILURE is selected from the SELECT TIME OR STEP ACTIVATION menu, the FAILURE OPERATIONS menu will be returned to the display and the word “NO” will appear next to the device previously selected.

**NOTE**

The above operation must be performed for each device/system selected for failures.

## F-5.2 Leave Initialization.

When all desired changes to the Scenario have been completed, move the cursor to LEAVE INITIALIZATION on the SELECT TRAINING FUNCTION menu and press key under SELECT. This will return the EMBEDDED TRAINING MAIN MENU to the display.

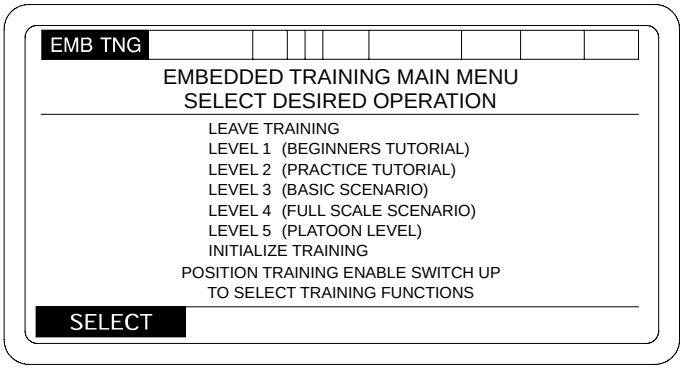


06pc248m

**NOTE**

If ET, BCWC or NAV is not operational, then the following will not be displayed.

LEVEL 3 (BASIC SCENARIO)
LEVEL 4 (FULL SCALE SCENARIO) and
INITIALIZE TRAINING

# F-5 INITIALIZE TRAINING OPTION - CONTINUED

## F-5.3 Running a Modified Scenario.

a. Select Level 3 (Basic Scenario) or Level 4 (Full Scale Scenario) from the MAIN MENU. This will cause a SELECT METHOD OF SAVING PERFORMANCE DATA menu to be displayed.

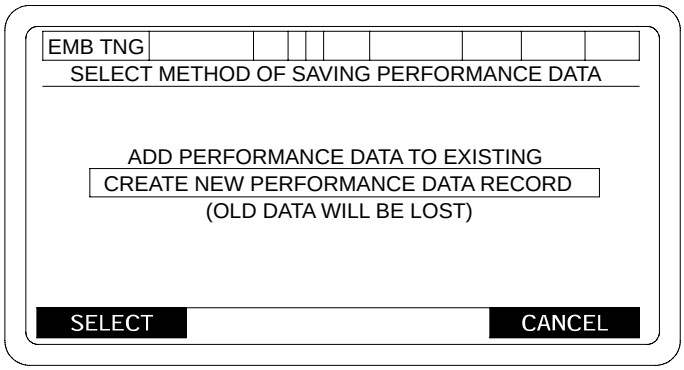


06pc249m

b. Selection of either method will cause a SELECT SCENARIO TO RUN menu to appear on the display.

c. Move the cursor to MODIFIED on the SELECT SCENARIO TO RUN and press the key under SELECT.

**NOTE**

A Modified scenario will be available only if an existing scenario has been changed by using the options available under INITIALIZE TRAINING or a scenario has been put into the trainer using the serial port. If no Modified scenario is available, the line Modified will not appear on the menu.

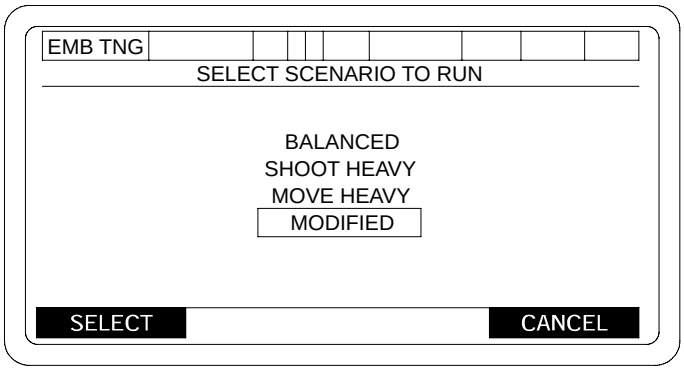


06pc250m

d. Steps to DEFINE SCENARIO AREAS are same as previously discussed. Initialization for training steps are also the same.

# F-5 INITIALIZE TRAINING OPTION - CONTINUED

## F-5.4 Download a Scenario.

This option will allow the user to install a customized training scenario which has been developed on an external source into the embedded trainer. This feature will allow the design of a training scenario to meet a specific need.

## F-5.5 Offload Performance Data.

This option permits the user to look at the data collected in the performance file of the embedded trainer. The performance file contains data on the following areas:

- Time to Perform Emplacement
- Time to Perform Ammunition Inventory
- Time to Initialize AFCS/PDFCS After Power Up
- Time to Perform Fire Mission
- Crew Precision in Location and Orientation of the Howitzer
- Records unauthorized operator activity during an Embedded Training Scenario
- Any UTE (Unable to execute) or BAT (Be advised that) messages that are sent

a. To look at the performance data on the display, move the box to OFFLOAD PERFORMANCE DATA on the SELECT TRAINING FUNCTION menu and press the key under SELECT. A SELECT OFFLOAD DEVICE menu will be displayed.

**NOTE**

Menus are available to use an external device; however, the device to use is TBD.

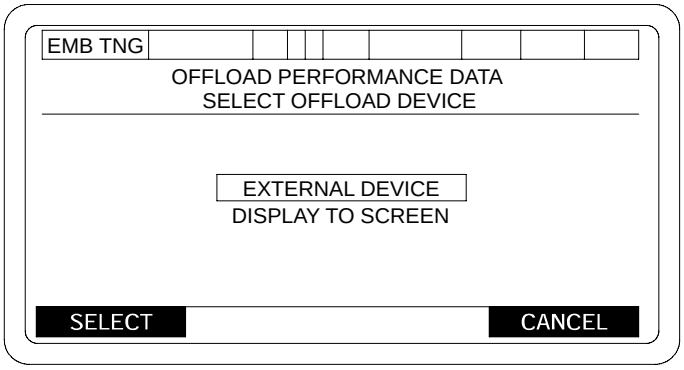


06pc251m

# F-5 INITIALIZE TRAINING OPTION - CONTINUED

## F-5.5 Offload Performance Data - Continued

b. To display the data to the DU/PDU display use the arrow keys to move the box to DISPLAY TO SCREEN and press the key under SELECT. A PERFORMANCE DATA DISPLAY menu will be displayed.

c. To view all data, press key under NEXT PAGE. Use the CANCEL key to exit this menu.

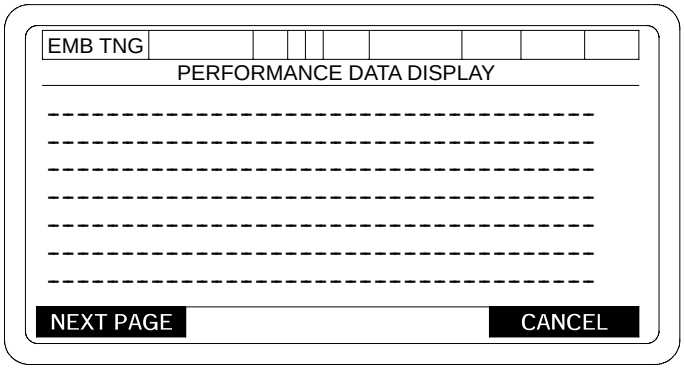


06pc252m

## F.1-3 ENTERING TRAINING MODE.

To begin training, proceed as follows:

a. Enter the training mode of operation.

(1) If the AFCS/PDFCS is OFF, ensure vehicle MASTER switch is ON, the PCU/PCU - 2 circuit breakers are in the ON position, then turn the DU/PDFCS power switch ON. Refer to System Power Up, para 2-12.1 for AFCS or 2-15B.1 for PDFCS.

(2) If the AFCS/PDFCS is ON, go to the SETUP AND INFORMATION menu and select SYSTEM RESTART.

First a POWER UP STATUS menu, then a SELECT OPERATIONAL MODE menu, will be displayed.

b. Set DU/PDU training switch to ON (up).

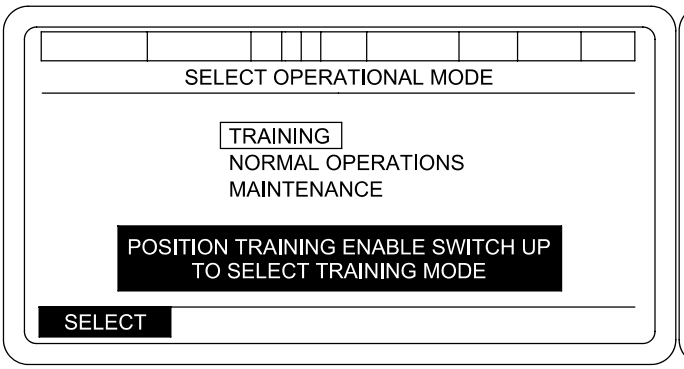


06pc215ma

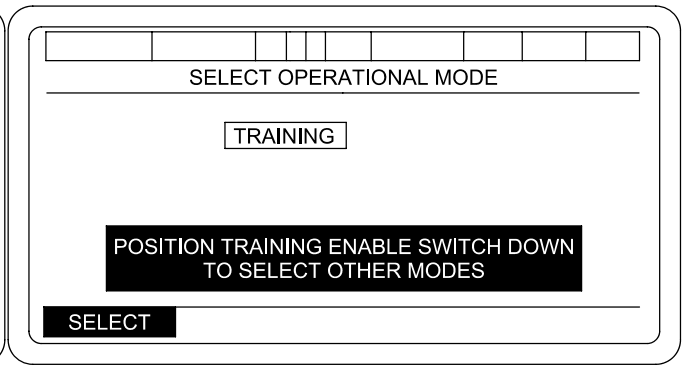


06pc216ma

c. Press SELECT key. The EMBEDDED TRAINING MAIN MENU will be displayed.

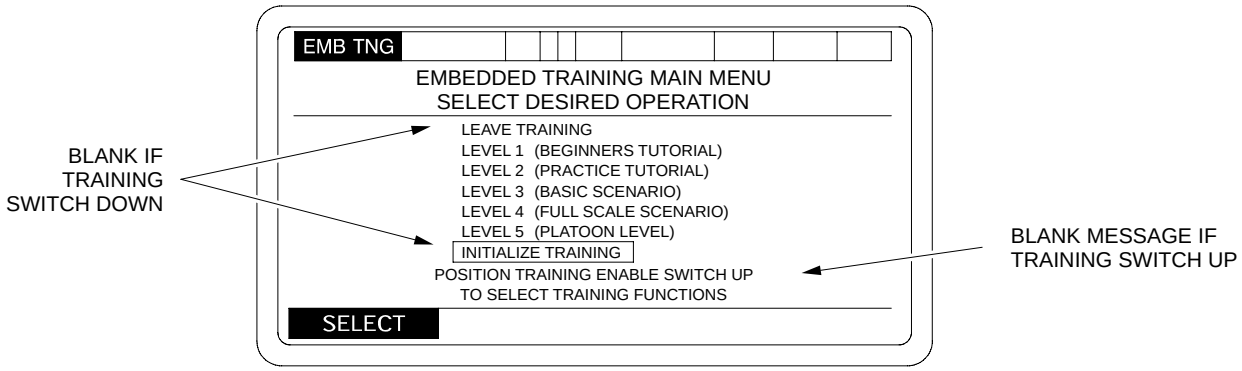


06pc217m

**NOTE**

If ET, BCWC or NAV is not operational, then the following will not be displayed.

LEVEL 3 (BASIC SCENARIO)
LEVEL 4 (FULL SCALE SCENARIO) and
INITIALIZE TRAINING

## F.1-3 ENTERING TRAINING MODE - CONTINUED

d. Select desired training level or Initialize Training.

(1) Use the arrow keys to box the desired selection.

(2) Press SELECT key.

## F.1-4 LEVEL OF OPERATION.

Sections F-4 thru F-5.5 explain the operation of Level 1, Level 2, Level 3, Level 4, and Initialize Training.

### F.1-4.1 Level 1.

Selection of training Level 1 will provide the operator with information concerning the DU/PDU keys, menu, layout, use of menus, and menu editing.

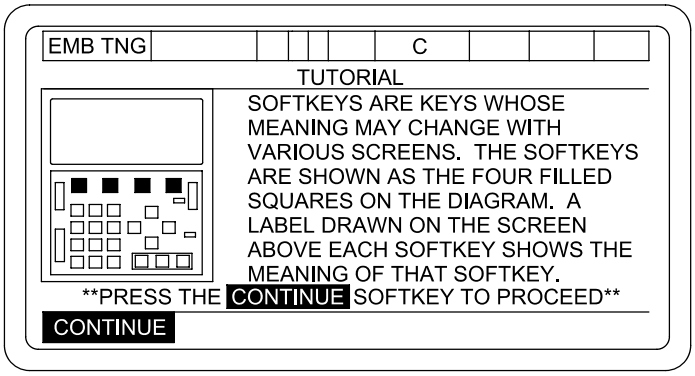


06pc287t

**Example of Level 1 Training**

### F.1-4.2 Level 2.

Selection of Level 2 will provide the operator with step-by-step drills. A menu will allow either selection of a specific function or drill or a complete (but simplified) sequence of instructions which represent normal AFCS/PDFCS Operation. You will have the option to repeat this training level or proceed to next higher (or lower) level. Any data required for input to AFCS/PDFCS (initialization point data, ammo inventory, etc.) will be provided. Performance measurement is not available at this level.

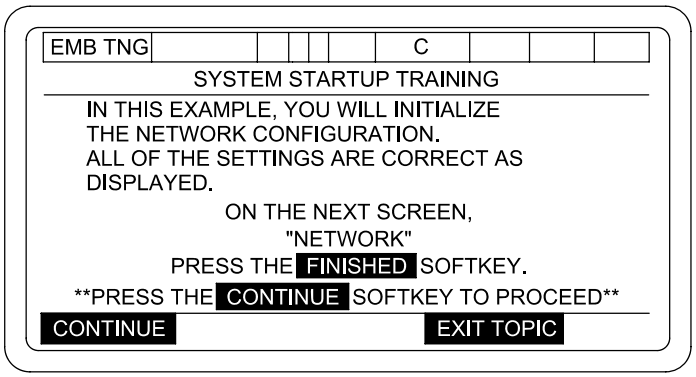


06pc288t

## F.1-4 LEVEL OF OPERATION - CONTINUED

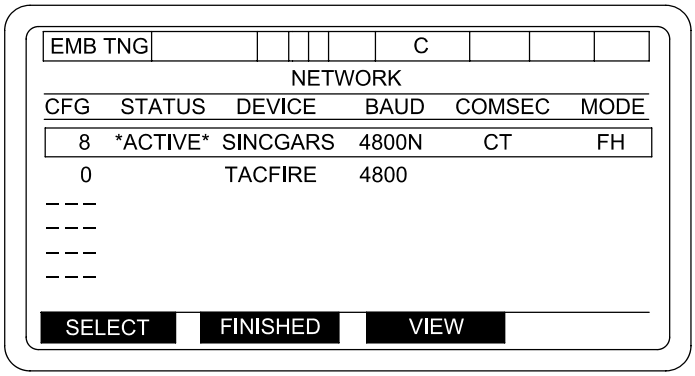


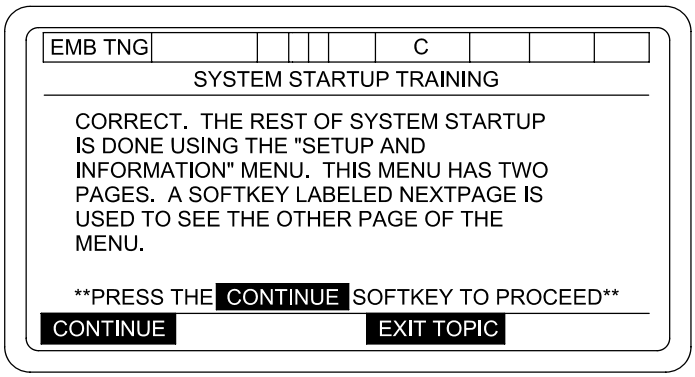


06pc289t

**Example of Level 2 Training**

## F.1-4 LEVEL OF OPERATION - CONTINUED

### F.1-4.3 Levels 3 and 4.

If Level 3 is selected you will receive Scenario Training by Event. Each scenario event will be presented to you one at a time with each event completing before next event is presented. Initialization entries will allow selection of scenario type, enable or disable state for faults, and provide a default ammunition inventory. When faults are allowed, each fault will be a separate scenario event. Performance measurement will be provided for this level of training.

To perform Level 3 or Level 4 Training use the following procedure:

a. Use arrow keys on DU/PDU to move box to Level 3 (Basic Scenario) or Level 4 (Full Scale Scenario) on the EMBEDDED TRAINING MAIN MENU.

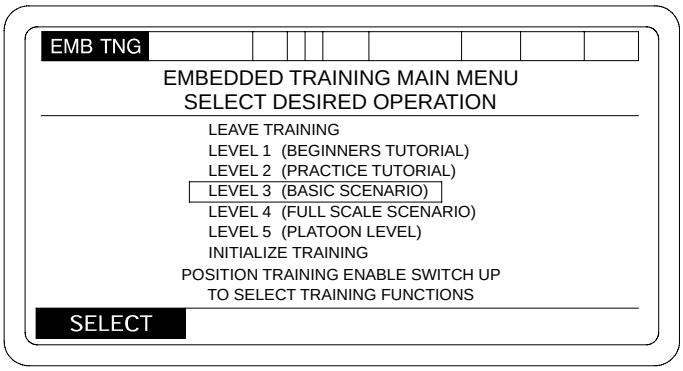


06pc222m

**NOTE**

If ET, BCWC or NAV is not operational, then the following will not be displayed.

LEVEL 3 (BASIC SCENARIO)
LEVEL 4 (FULL SCALE SCENARIO) and
INITIALIZE TRAINING

b. Press key beneath SELECT. This will cause the SELECT METHOD OF SAVING PERFORMANCE DATA menu to appear.

c. Using arrow keys, move box to desired selection.

## F.1-4 LEVEL OF OPERATION - CONTINUED

### F.1-4.3 Levels 3 and 4 - Continued

**NOTE**

Pressing the key under CANCEL will cause EMBEDDED TRAINING main menu to be displayed

(1) Selection of ADD PERFORMANCE DATA TO EXISTING line will cause data collected during next scenario to be added to data in the file.

(2) Selection of CREATE NEW PERFORMANCE DATA RECORD line will cause data previously collected to be lost.

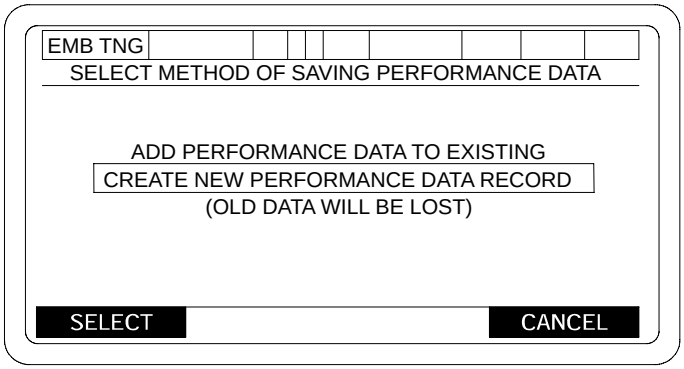


06pc223m

# F.1-4 LEVEL OF OPERATION - CONTINUED

## F.1-4.3 Levels 3 and 4 - Continued

d. Press the key under SELECT for desired method of saving performance data. A SELECT SCENARIO TO RUN menu will be displayed.

e. Using arrow keys, move box to desired selection.

**NOTE**

Pressing the key under CANCEL will return the SELECT METHOD OF SAVING PERFORMANCE DATA menu to the display.

(1) A “BALANCED” scenario has a ratio of Fire Missions to Moves of 4/1.

(2) A “SHOOT HEAVY” scenario has a ratio of Fire Missions to Moves of 8/1.

(3) A “MOVE HEAVY” scenario has a ratio of Fire Missions to Moves of 2/1.

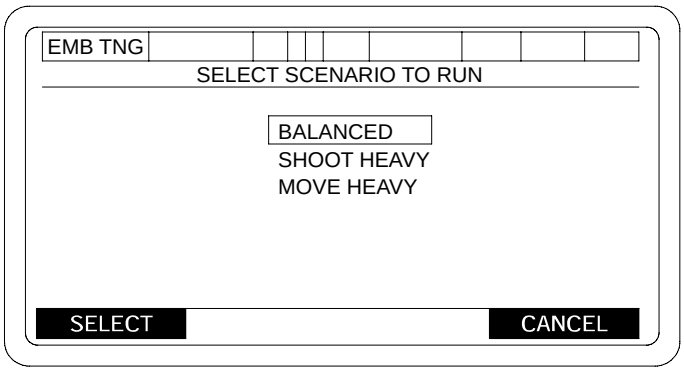


06pc224m

## F.1-4 LEVEL OF OPERATION - CONTINUED

### F.1-4.3 Levels 3 and 4 - Continued

f. Press the key under SELECT for desired scenario. After a scenario has been selected, the DEFINE SCENARIO AREAS menu (Grid Zone) will appear.

**NOTE**

Data entered in the DEFINE SCENARIO AREAS menu must indicate the howitzer's current location. It must be the "True Life" location of the howitzer. Enter data prior to changing + or - sign.

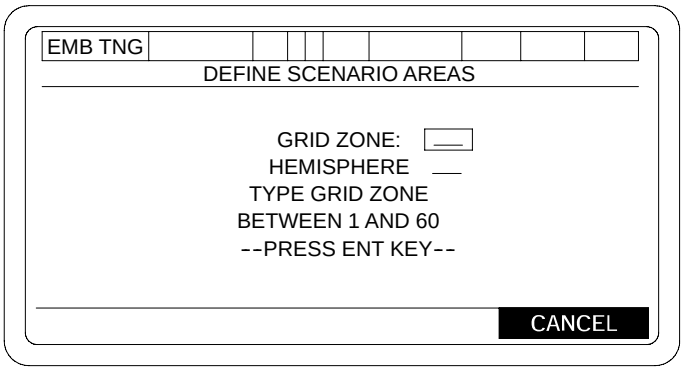


06pc225m

g. Enter desired grid zone and press ENT key on the DU panel/keypad. Select proper HEMISPHERE. Press USE ALL key to display the DEFINE SCENARIO AREAS menu.

# F.1-4 LEVEL OF OPERATION - CONTINUED

## F.1-4.3 Levels 3 and 4 - Continued

(1) The following prompts will appear on the DEFINE SCENARIO AREAS menu:

- TYPE EASTING OF SW CORNER BETWEEN 0 AND 999999 -PRESS ENT-
- TYPE EASTING OF NE CORNER BETWEEN 0 AND 999999 -PRESS ENT-
- TYPE NORTHING OF SW CORNER BETWEEN 0 AND 9999999 -PRESS ENT-
- TYPE NORTHING OF NE CORNER BETWEEN 0 AND 9999999 -PRESS ENT-

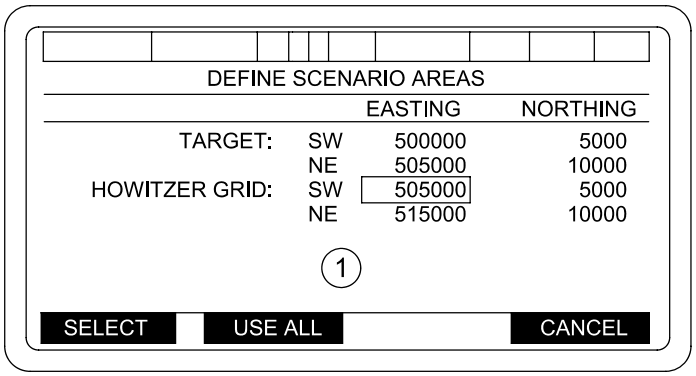


06pc290t

# F.1-4 LEVEL OF OPERATION - CONTINUED

## F.1-4.3 Levels 3 and 4 - Continued

h. Enter information for TARGET on DEFINE SCENARIO AREAS menu. This the area in which all target locations must lie (within a 10,000 square meter area). The target grid consists of Northing and Easting of southwest corner and Northing and Easting of northeast corner.

(1) Using the arrow keys, move box to TARGET SW field under Easting on the DEFINE SCENARIO AREAS menu.

(2) Press the key under SELECT, then type in grid coordinates of the easting of the southwest corner of desired operational area and press ENT key on DU/keypad.

(3) Using arrow keys, move box to TARGET SW under Northing and press the key under SELECT. Type in Northing grid coorinates of the southwest corner of operational area and press ENT key on DU/keypad.

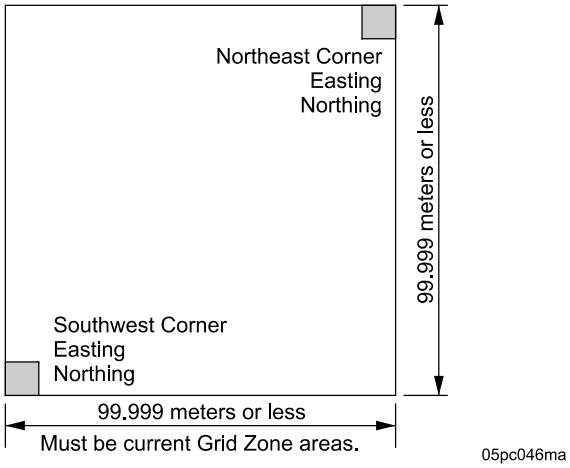


Target Grid

(4) Using the arrow keys, move the box to TARGET NE under the Easting on the DEFINE SCENARIO AREAS menu and press the key under SELECT. Type in the Easting grid coordinates of the Northwest corner of the operational area and press the ENT key on the DU/keypad.

(5) Using the arrow keys on the DU, move the cursor to TARGET NE under the Northing and press the key under SELECT of the DEFINE SCENARIO AREAS menu. Type in Northing of Northeast corner of the operational area and press ENT key on DU/keypad.

i. Enter information for HOWITZER GRID on DEFINE SCENARIO AREAS menu. This is the area to which all howitzer movements must be confined (10 km or less). It consists of Northing and Easting of southwest corner and Northing and Easting of northeast corner. If howitzer is to remain stationary, refer to note below.

## F.1-4 LEVEL OF OPERATION - CONTINUED

### F.1-4.3 Levels 3 and 4 - Continued

**NOTE**

If vehicle is to remain stationary during Level 3 and 4 Training define howitzer area map 1 meter by 1 meter (this will prevent difficulties during a Move Order mission).

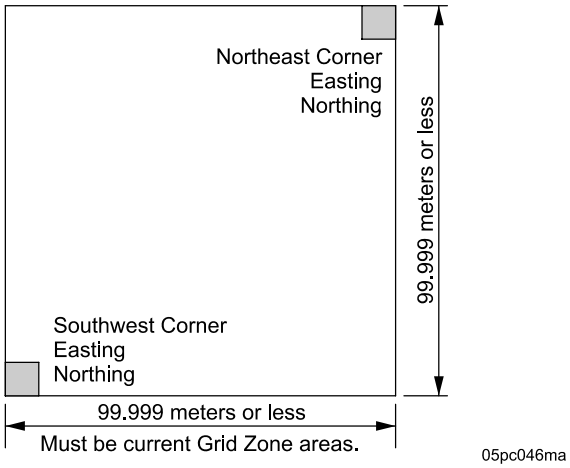


Howitzer Grid

**NOTE**

The maximum distance between the farmost corners of the Target Grid and Howitzer Grid must be less than 20 km to develop simulated fire missions (required for real ballistic computation).

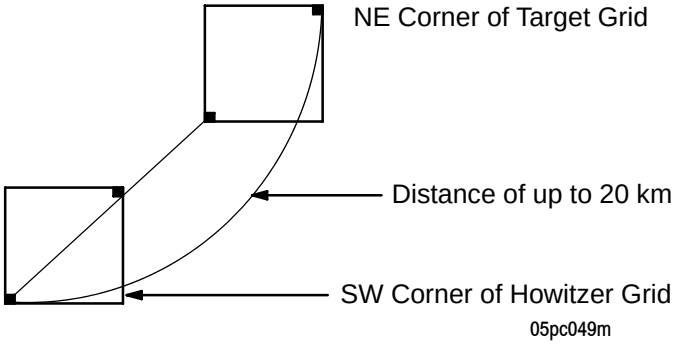


To enter Howitzer grid data use the same procedures described for TARGET.

**NOTE**

If a target or howitzer coordinate which is outside map grid or is inconsistent with other values is entered, an Alert of either “ILLEGAL TARGET AREA” or “ILLEGAL HOWITZER AREA” will be displayed. Press the CONFIRM key for the operator Alert and enter correct/proper data.

j. When all the desired data has been entered on the DEFINE SCENARIO AREAS menus, press the USE ALL key. This will force the AFCS/PDFCS into initialization as in Normal Operations.

## F.1-4 LEVEL OF OPERATION - CONTINUED

### F.1-4.3 Levels 3 and 4 - Continued

k. Initialize AFCS/PDFCS. Initialization of the AFCS/PDFCS is done according to initialization described in Normal Operations with the following exceptions:

- "True Life" data required for NAV RESTART (initialization point, grid and grid zone).
- AZIMUTH OF FIRE data in SECTOR OF FIRE menu must be the rough azimuth from Howitzer Grid Southwest Corner to Target Grid Southwest Corner as shown in illustration.

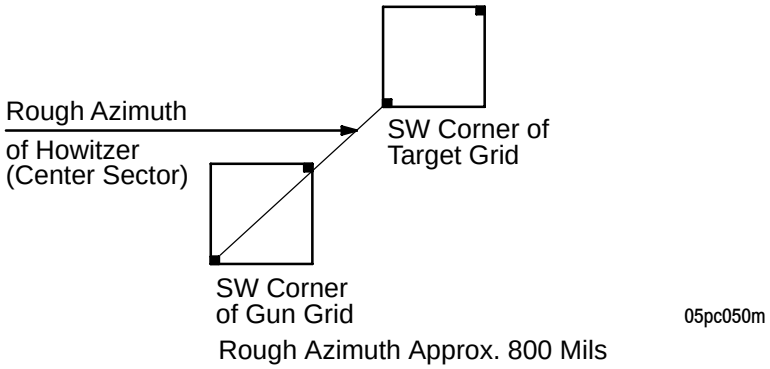


Other initialization data to be provided by the instructor.

l. Enter Embedded Trainer Ammunition Inventory information.

To use the default ammunition inventory, perform the following procedure while doing the AFCS/PDFCS initialization:

Embedded Trainer Ammunition Inventory - Basic Load

PROJECTILES

| | | |
|---|---|---|
| M483A1 (DPICM) | 20 | Total of 39 |
| M107 (HE) | 10 | |
| M825 (SMOKE) | 03 | |
| M549A1 (RAP) | 02 | |
| M485 (ILLUM) | 02 | |
| M712 (CPH) | 02 | |

PROPELLANTS

| | | |
|---|---|---|
| M4A2 | 15 | Total of 56 |
| M119A2 | 15 | |
| M203 | 08 | |
| M3A1 | 18 | |

FUZES

| | | |
|---|---|---|
| M577 (MT) | 28 | Total of 50 |
| M582 (MTSQ) | 06 | |
| M78 (CP) | 04 | |
| M557 (PD) | 12 | |

# F.1-4 LEVEL OF OPERATION - CONTINUED

## F.1-4.3 Levels 3 and 4 - Continued

(1) On the SETUP AND INFORMATION menu box AMMO INVENTORY; then press the key under SELECT. An INVENTORY MANAGEMENT menu will be displayed.

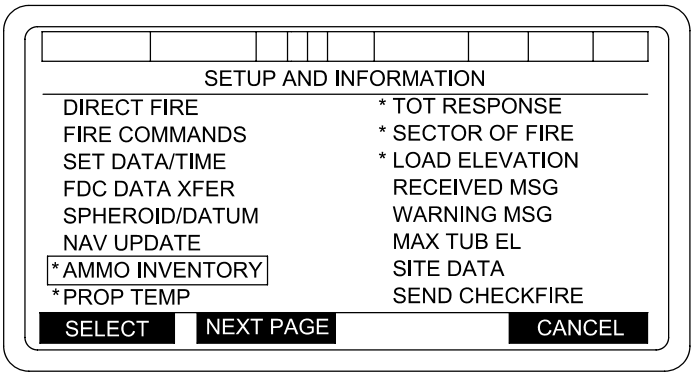


06pc291t

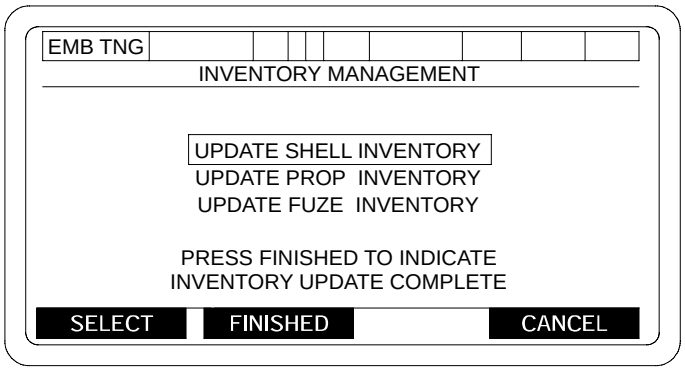


06pc228m

(2) Press the key under FINISHED. The SETUP AND INFORMATION menu will be displayed. This action will complete the AFCS/PDFCS initialization process (all asterisked items must be initialized).

# F.1-4 LEVEL OF OPERATION - CONTINUED

## F.1-4.3 Levels 3 and 4 - Continued

m. Store default ammo inventory. When Initialization is complete (alignment countdown finished), press CANCEL key in the SETUP AND INFORMATION menu to display a MOVE ORDER in level 3 or SECTION IN ORDER at INITIALIZATION POINT in level 4.

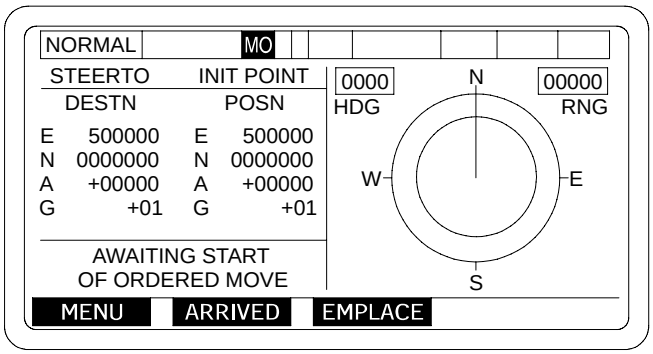


06pc229m

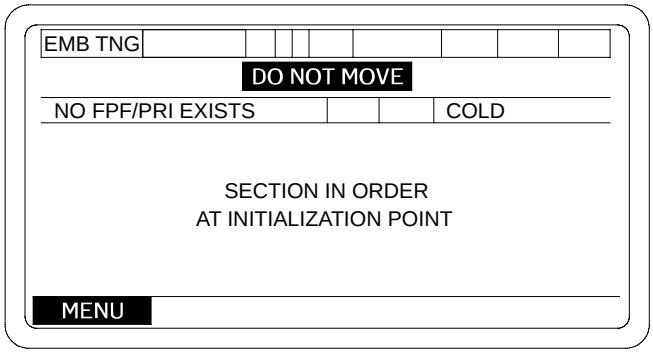


06pc230m

(1) To store the default Ammo Inventory, press the menu key to display SETUP AND INFORMATION menu.

# F.1-4 LEVEL OF OPERATION - CONTINUED

## F.1-4.3 Levels 3 and 4 - Continued

(2) Move the box to AMMO INVENTORY and press the key under SELECT. An INVENTORY MANAGEMENT menu will be displayed.

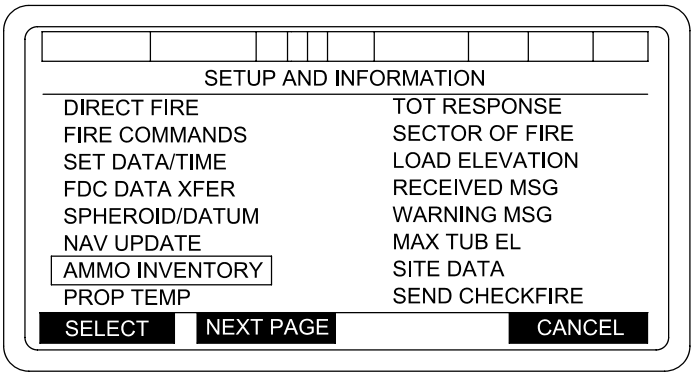


06pc291t

(3) Using the arrow keys, move box to EDIT FDC PROVIDED on the INVENTORY MANAGEMENT menu; then press the key under SELECT. Another INVENTORY MANAGEMENT menu will be displayed.

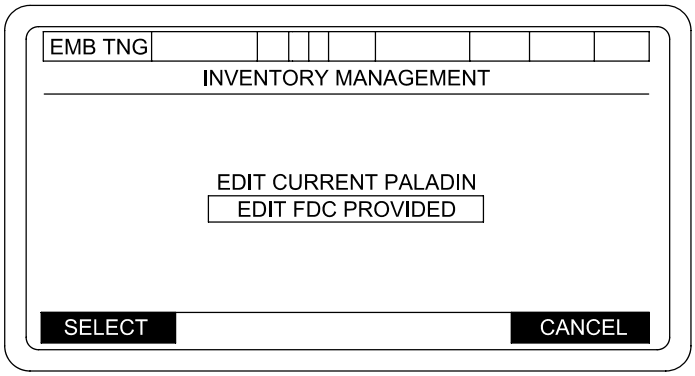


06pc292t

## F.1-4 LEVEL OF OPERATION - CONTINUED

### F.1-4.3 Levels 3 and 4 - Continued

(4) Press the key under FINISHED on this INVENTORY MANAGEMENT menu to store the default Ammo Inventory into the trainer.

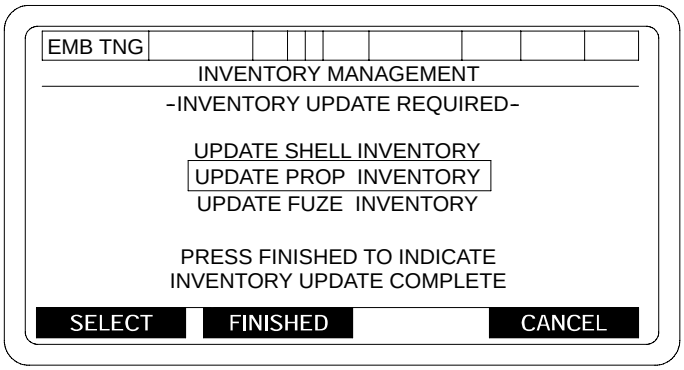


06pc233m

n. To exit the training mode while in a scenario, switch the trainer switch on the DU panel/keypad to the OFF position. The EMBEDDED TRAINING MAIN MENU will be displayed.

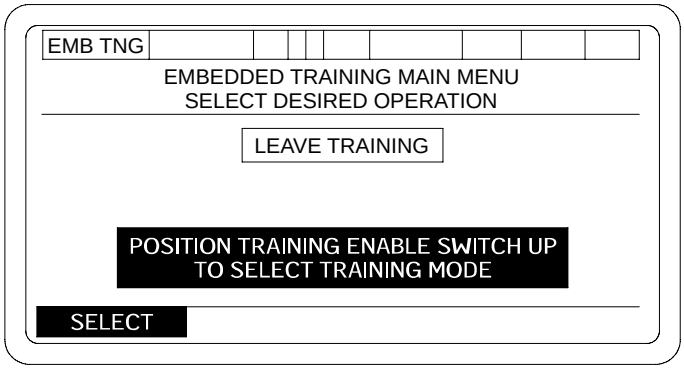


06pc234m

o. Press the key under SELECT. The system will automatically do a restart and return to the SELECT OPERATIONAL MODE menu.

## F.1-5 INITIALIZE TRAINING OPTION

Initialize Training will allow selection of scenario type, enable/disable state for faults, and provide a default Ammunition Inventory. If faults are allowed, faults will be inserted into the scenario sequence to emulate degraded system operation. This will allow you to respond to faults as you would in a “Real World” situation. Additional events will be enabled in scenarios to emulate interruption of normal function/task flow. Performance measurement will be provided for this level of training. To use the Initialize Training option perform the following procedures:

a. Use the arrow keys to move box to INITIALIZE TRAINING on the EMBEDDED TRAINING MAIN Menu.

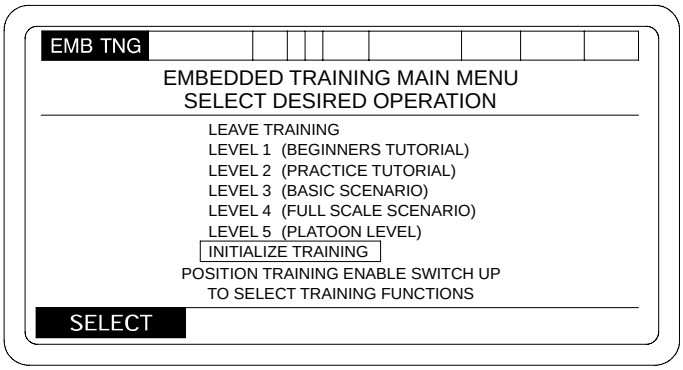


06pc235m

**NOTE**

If ET, BCWC or NAV is not operational, then the following will not be displayed.

LEVEL 3 (BASIC SCENARIO)
LEVEL 4 (FULL SCALE SCENARIO) and
INITIALIZE TRAINING

b. Press key under SELECT. An INSTRUCTOR ENTRY menu will be displayed.

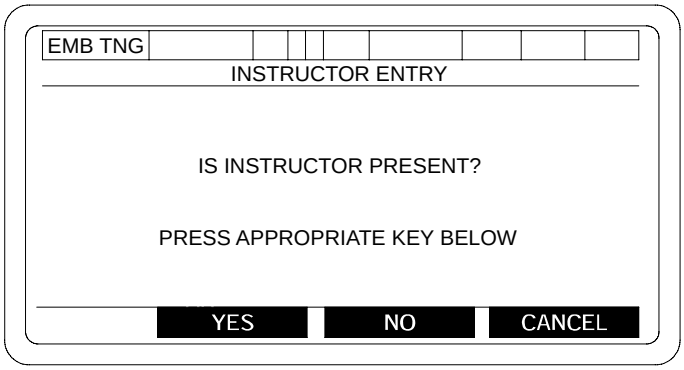


06pc236m

c. Press either the YES or NO key. This will cause a WEAPON MOVEMENT ENTRY menu to be displayed.

## F.1-5 INITIALIZE TRAINING OPTION - CONTINUED

d. The WEAPON MOVEMENT ENTRY menu allows you to select whether the weapon will move during the training scenario or remain stationary. One of the 2 menus shown will appear, depending upon whether the weapon is in the enable or disable mode.

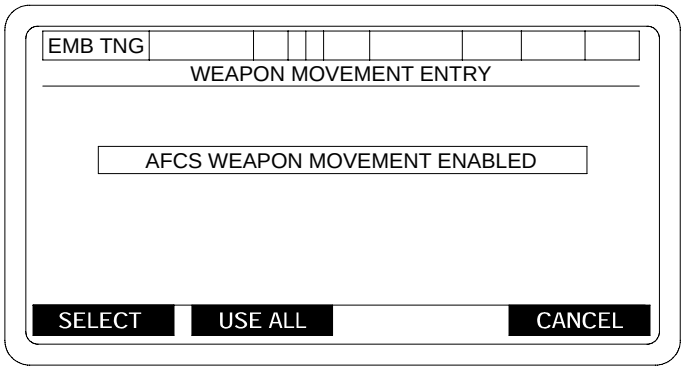


06pc237m

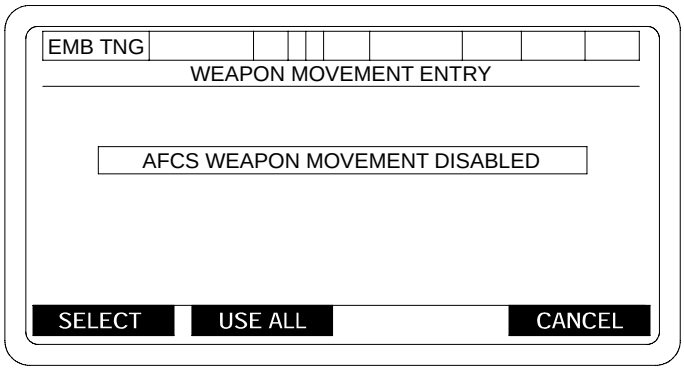


06pc238m

## F.1-5 INITIALIZE TRAINING OPTION - CONTINUED

e. To change from enabled to disabled or from disabled to enabled, press the key under SELECT. One of the following menus will be displayed. To change the Weapon Movement, press the key under YES. If a change is not desired at this time press the key under NO.

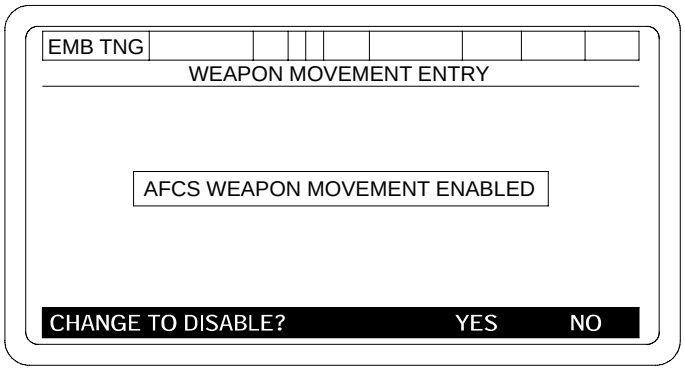


06pc239m

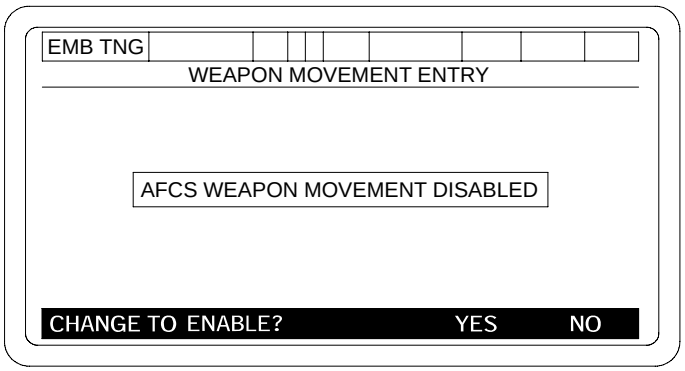


06pc240m

## F.1-5 INITIALIZE TRAINING OPTION - CONTINUED

f. To enter the Weapon Movement Entry, press key under USE ALL. A SELECT TRAINING FUNCTION menu will be displayed.

**NOTE**

The following options on the SELECT TRAINING FUNCTION menu will not be available if NO was pressed on the INSTRUCTOR ENTRY menu.

ALTER EXISTING SCENARIO
SELECT SCENARIO OPTIONS
EDIT FAILURES

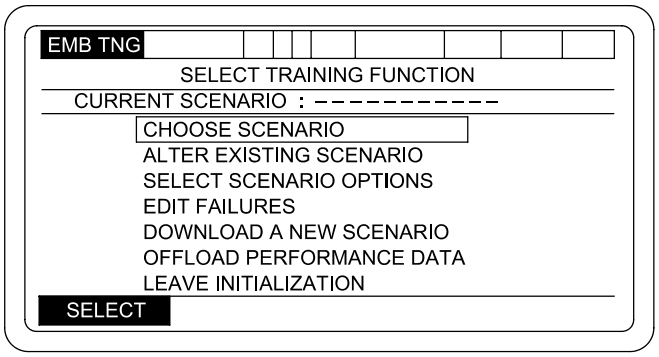


V7.00 SOFTWARE

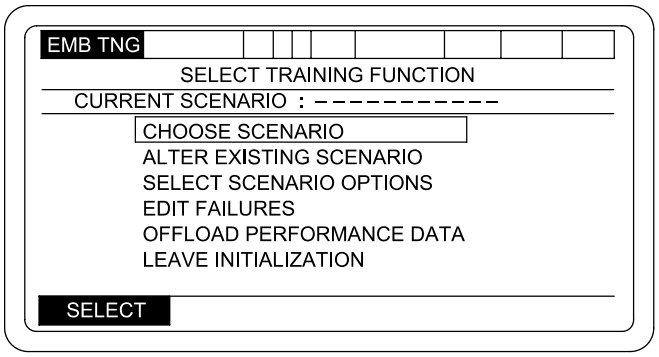


V7P.00 SOFTWARE

06pc297t

### F.1-5.1 Scenario.

F.1-5.1.1 Choose Scenario.

This option allows the operator to choose the scenario that he wants to alter/change.

a. Using the arrow keys, move box to CHOOSE SCENARIO on the SELECT TRAINING FUNCTION menu and press the key under SELECT. A SELECT SCENARIO TO RUN menu will be displayed.

# F.1-5 INITIALIZE TRAINING OPTION - CONTINUED

## F.1-5.1 Scenario - Continued

b. Move box using arrow keys on DU/keypad to the desired scenario to be changed, then press SELECT key. This will cause the SELECT TRAINING FUNCTION menu to be redisplayed.

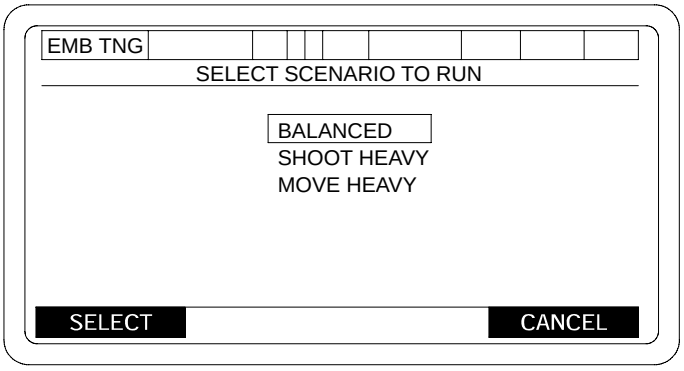


hipc4106

F.1-5.1.2 Alter Existing Scenario.

This option allows modification of the current scenario. The CURRENT SCENARIO shown in the SELECT TRAINING FUNCTION menu is the one to be modified.

a. Using the arrow keys on the DU/keypad, move the box to ALTER EXISTING SCENARIO, then press the key under SELECT. A SCENARIO SUMMARY menu will be displayed.

SCENARIO SUMMARY Menu

b. The SCENARIO SUMMARY menu allows a single step in the scenario to be changed. To accomplish this, use the arrow keys to move the cursor to the desired step to be changed and press the key under SELECT. An ALTER SCENARIO LOCATION menu will be displayed.

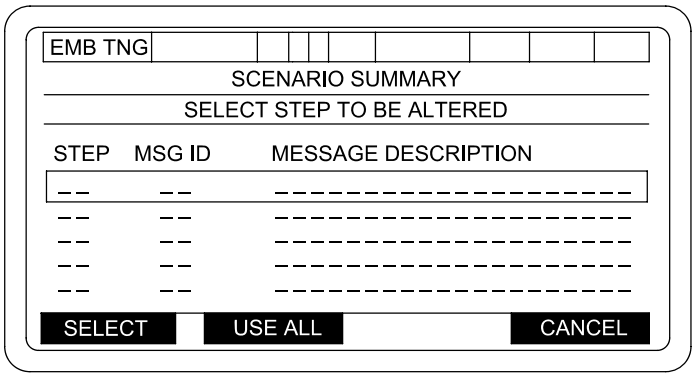


06pc293t

# F.1-5 INITIALIZE TRAINING OPTION - CONTINUED

## F.1-5.1 Scenario - Continued

ALTER SCENARIO LOCATION Menu

**NOTE**

The LOCATION OFFSET will be Easting and Northing in meters, measured from southwest corner of appropriate area; Target grid or Howitzer grid depending on whether Message ID is for Fire Mission or Move Mission. If Message ID is for neither, then LOCATION OFFSET will have no meaning for that step.

c. To alter a location, move cursor to EASTING or NORTHING and press the key under SELECT, type in desired offset (0 - 9999 meters) and press ENT key on DU/keypad. When both desired offsets have been entered, press key under USE ALL. The SCENARIO SUMMARY menu is then displayed. When all desired steps of the SCENARIO SUMMARY menu have been changed/altered, press the USE ALL key. This will cause the SELECT TRAINING FUNCTION menu to be redisplayed.

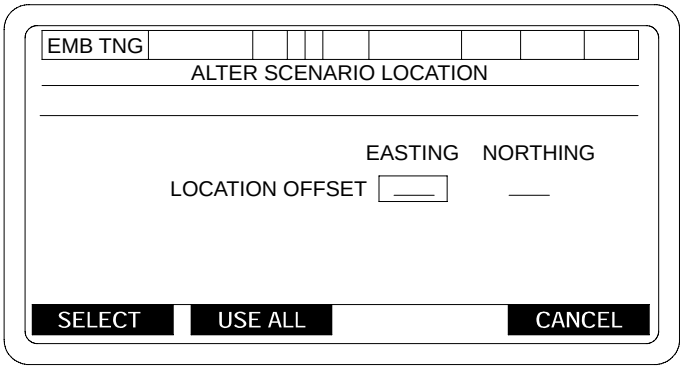


06pc243m

# F.1-5 INITIALIZE TRAINING OPTION - CONTINUED

## F.1-5.1 Scenario - Continued

F.1-5.1.3 Select Scenario Options.

This menu allows the operator to select options in a scenario. Use the following steps.

a. Move box to SELECT SCENARIO OPTIONS on the SELECT TRAINING FUNCTION menu and press the key under SELECT to display the SELECT SCENARIO OPTIONS menu.

b. The Scenario Options will be listed as “YES” or “NO” when the menu appears on the display. To make a change, use the arrow keys to move box to the desired line and press the SELECT key.

   A prompt will appear (change to YES - YES/NO or change to NO - YES/NO). Make the desired choice. That choice will then appear on the menu.

c. When desired options have been changed, press the key under USE ALL. USE ALL will enter any changes and return you to the SELECT TRAINING FUNCTION menu.

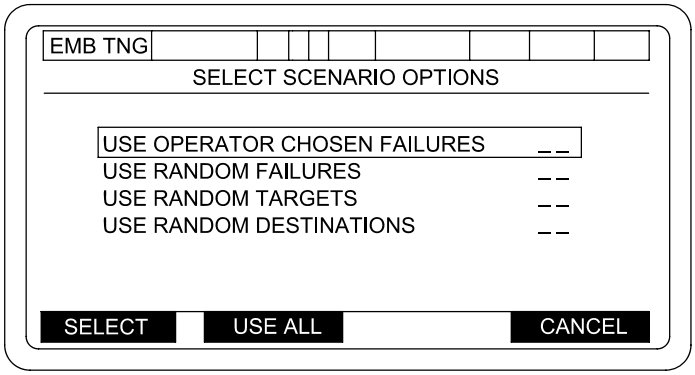


06pc294t

F.1-5.1.4 Edit Failures.

This option permits the operator to change or define a failure operation in a scenario. Perform the following steps to accomplish failure changes.

a. Using the arrow keys move the box to EDIT FAILURES on the Select Training Function menu and press the key under SELECT. A FAILURE OPERATIONS menu will be displayed.

## F.1-5 INITIALIZE TRAINING OPTION - CONTINUED

### F.1-5.1 Scenario - Continued

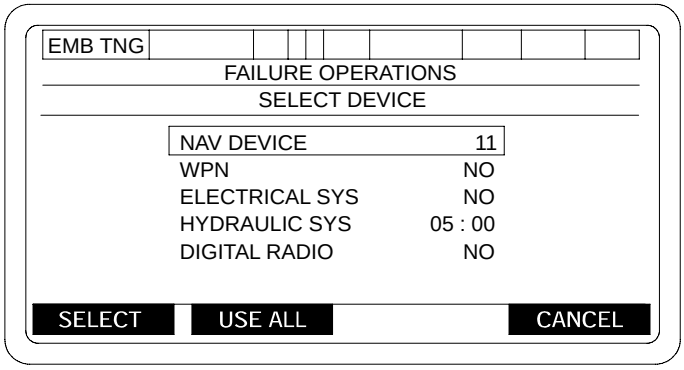


06pc082m

**NOTE**

To the right of each device shown in the menu there may appear the word “NO” if no failure for the device is desired, a time if a time failure has been selected or a number between 1 and 99 if a step failure has been selected.

b. FAILURE OPERATIONS menu allows the operator to program the failures that will occur during the training scenario. To select a device/system, use the arrow keys to move box to selection, then press the key under SELECT. The SELECT TIME OR STEP ACTIVATION menu will be displayed. USE OPERATOR SELECTED FAILURES (YES) on the SELECT SCENARIO OPTIONS menu must have been selected or this step will not work.

# F.1-5 INITIALIZE TRAINING OPTION - CONTINUED

## F.1-5.1 Scenario - Continued

c. The SELECT TIME OR STEP ACTIVATION menu allows the operator to have the selected device fail at a particular time in the scenario or have the device fail at a particular step in the scenario.

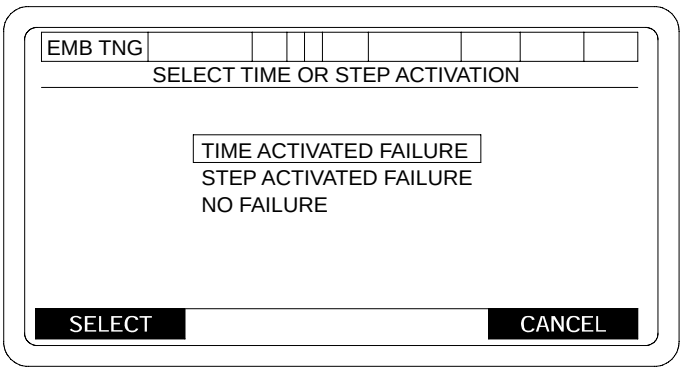


06pc245m

(1) For a time failure, use the arrow keys to move the cursor to TIME ACTIVATED FAILURE on the SELECT TIME OR STEP ACTIVATION menu and press the key under SELECT. A TIME OF FAILURE menu will appear on the display.

(2) Type in the time for the failure to occur and press the ENT key. This will return the FAILURE OPERATIONS menu to the display and the time entered will appear to the right of the device previously selected.

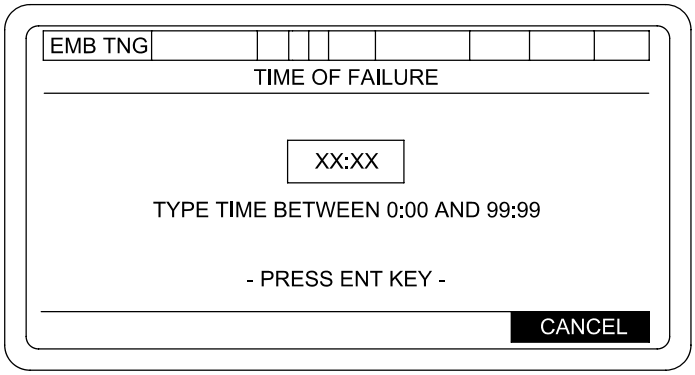


06pc295t

d. For a Step Failure move the cursor to STEP ACTIVATED FAILURE on the SELECT TIME OR STEP ACTIVATION menu and press the key under SELECT. A STEP OF FAILURE menu will be displayed.

## F.1-5 INITIALIZE TRAINING OPTION - CONTINUED

### F.1-5.1 Scenario - Continued

Type in the step where the failure is to occur and press the ENT key. This will return the display to the FAILURE OPERATIONS menu and the step number you entered will appear to the right of the device you previously selected.

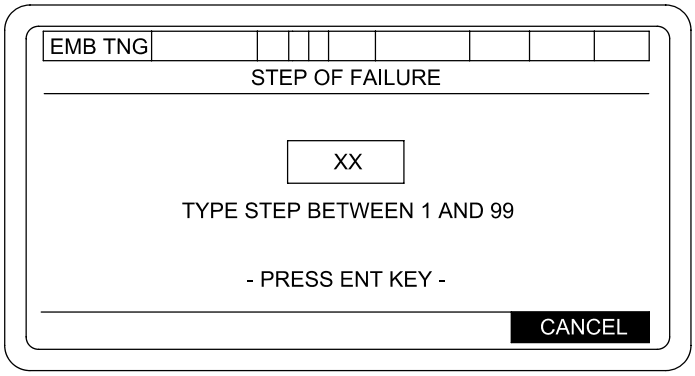


06pc296t

e. If NO FAILURE is selected from the SELECT TIME OR STEP ACTIVATION menu, the FAILURE OPERATIONS menu will be returned to the display and the word “NO” will appear next to the device previously selected.

**NOTE**

The above operation must be performed for each device/system selected for failures.

### F.1-5.2 Leave Initialization.

When all desired changes to the Scenario have been completed, move the cursor to LEAVE INITIALIZATION on the SELECT TRAINING FUNCTION menu and press key under SELECT. This will return the EMBEDDED TRAINING MAIN MENU to the display.

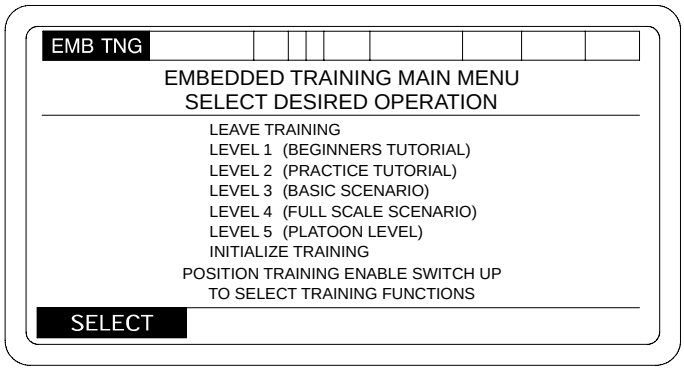


06pc248m

**NOTE**

If ET, BCWC or NAV is not operational, then the following will not be displayed.

LEVEL 3 (BASIC SCENARIO)
LEVEL 4 (FULL SCALE SCENARIO) and
INITIALIZE TRAINING

## F.1-5 INITIALIZE TRAINING OPTION - CONTINUED

### F.1-5.3 Running a Modified Scenario.

a. Select Level 3 (Basic Scenario) or Level 4 (Full Scale Scenario) from the MAIN MENU. This will cause a SELECT METHOD OF SAVING PERFORMANCE DATA menu to be displayed.

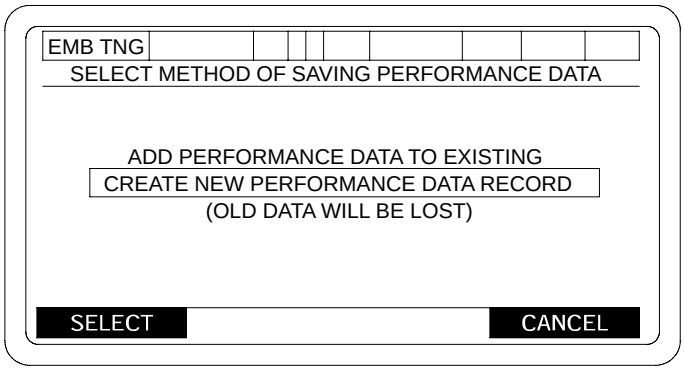


06pc249m

b. Selection of either method will cause a SELECT SCENARIO TO RUN menu to appear on the display.

c. Move the cursor to MODIFIED on the SELECT SCENARIO TO RUN and press the key under SELECT.

**NOTE**

A Modified scenario will be available only if an existing scenario has been changed by using the options available under INITIALIZE TRAINING or a scenario has been put into the trainer using the serial port. If no Modified scenario is available, the line Modified will not appear on the menu.

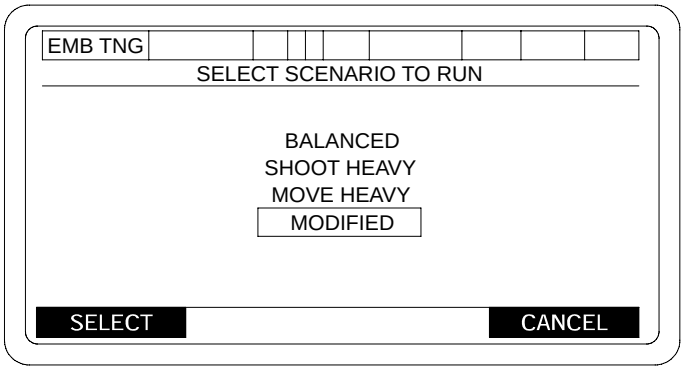


06pc250m

d. Steps to DEFINE SCENARIO AREAS are same as previously discussed. Initialization for training steps are also the same.

## F.1-5 INITIALIZE TRAINING OPTION - CONTINUED

### F.1-5.4 Download a Scenario.

Deleted.

### F.1-5.5 Offload Performance Data.

This option permits the user to look at the data collected in the performance file of the embedded trainer. The performance file contains data on the following areas:

- Time to Perform Emplacement
- Time to Perform Ammunition Inventory
- Time to Initialize AFCS/PDFCS After Power Up
- Time to Perform Fire Mission
- Crew Precision in Location and Orientation of the Howitzer
- Records unauthorized operator activity during an Embedded Training Scenario
- Any UTE (Unable to execute) or BAT (Be advised that) messages that are sent

a. To look at the performance data on the display, move the box to OFFLOAD PERFORMANCE DATA on the SELECT TRAINING FUNCTION menu and press the key under SELECT. A SELECT OFFLOAD DEVICE menu will be displayed.

**NOTE**

Menus are available to use an external device (V7.00 Software only); however, the device is not currently available.

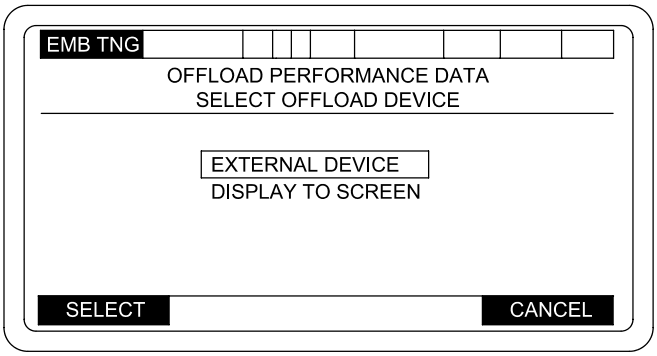


V7.00 SOFTWARE

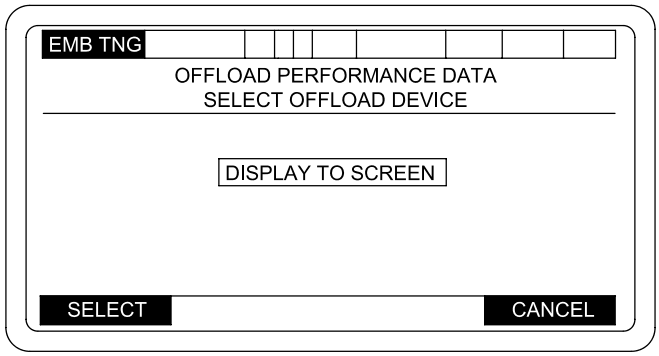


V7P.00 SOFTWARE

06pc298t

# F.1-5 INITIALIZE TRAINING OPTION - CONTINUED

## F.1-5.5 Offload Performance Data - Continued

b. To display the data to the DU/PDU display use the arrow keys to move the box to DISPLAY TO SCREEN and press the key under SELECT. A PERFORMANCE DATA DISPLAY menu will be displayed.

c. To view all data, press key under NEXT PAGE. Use the CANCEL key to exit this menu.

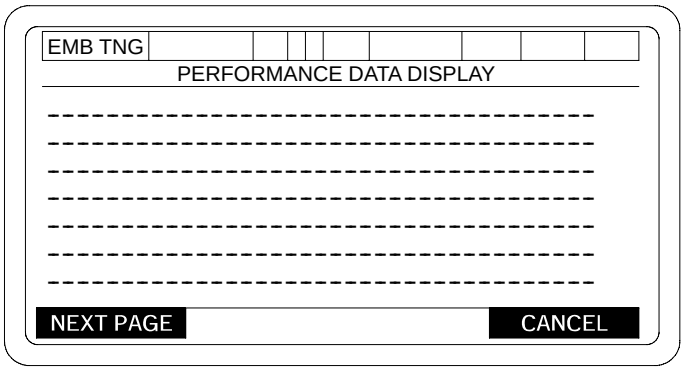


06pc252m

# APPENDIX F.2

# EMBEDDED TRAINER (VERSION 2.0 AND 2.0P SOFTWARE)

## F.2-1 GENERAL.

The AFCS/PDFCS Embedded Trainer is a built-in training device which uses a specially designed computer program. The program allows the AFCS/PDFCS to operate as a training device. The embedded trainer is designed to improve and maintain the proficiency of operators and crews. The embedded training function provides the capability to train howitzer crews using levels from initial tutorial programs on the operation of the AFCS/PDFCS controls to running a full-scale simulated mission.It is also possible for the instructor to create scenarios for the crew to respond to and to use the embedded trainer to monitor and evaluate their performance.

A specific sequence of actions by the operator is required to enter the embedded training mode. This feature ensures that the training mode cannot be entered accidentally during a mission.

## F.2-2 LEVELS OF TRAINING.

Five levels of training are available to the user. The Initialize Training option is also available.

### F.2-2.1 Level 1 Training.

Level 1 is a tutorial program that lists AFCS/PDFCS operating modes and functions, describes keys available on the DU/PDU, general layout of menus, how menus are used, and menu editing. It is designed to lead the user through the step-by-step operation of the AFCS/PDFCS controls. The operation of the various switches and pushbuttons is explained, and then the operator is required to use them to perform tasks called out by the tutorial scenario. The operator reads and follows the instructions that are presented via the display panel of the DU/PDU. The presence of an instructor is not required. After mastery of the controls is obtained, the operator may select a more difficult level. No performance measurement is available at this level.

### F.2-2.2 Level 2 Training.

Level 2 is also a tutorial program designed to lead the user through the step-by-step operation of the AFCS/PDFCS. The operator uses the skills mastered in Level 1 as a base and applies them to the actual system operation. The program allows an operator who is not familiar with the AFCS/PDFCS to learn the system operation on their own, at their own pace, without the need for an instructor to be present.

## F.2-2 LEVELS OF TRAINING - CONTINUED

### F.2-2.2 Level 2 Training - Continued

Level 2 Tutorial provides step-by-step drills. A menu will allow either selection of a specific function for drill or a complete (but simplified) sequence of functions which represent normal AFCS/PDFCS Operation. You may repeat this training level or proceed to next higher (or lower) level. Any data required for input to AFCS/PDFCS (initialization point data, ammo inventory, etc.) will be provided. Performance measurement is not available at this level.

### F.2-2.3 Level 3 Training.

Unlike Levels 1 and 2, Level 3 is not a tutorial. This level is designed to maintain or improve the performance of a trained operator. The program will run a typical mission scenario. The performance data will be displayed on the display panel of the DU/PDU. This provides a means of scoring individuals who use the embedded training device at this level.

### F.2-2.4 Level 4 Training.

In Level 4, it is possible for the instructor to modify the scenario by altering destination and target location. The operator is given the opportunity to choose a “move-heavy,” a “shoot heavy,” or a “balanced” scenario. If an instructor is present, the option to introduce simulated system faults is also available. Among the faults that may be introduced are hydraulic system failure, communications failure, navigational system failure, and electrical systems failure.

### F.2-2.5 Level 5 Training.

When using the simulated navigation feature during level 5 training all devices (BCS and observers) participating in the training must use the same simulated map area.

### F.2-2.6 Initialize Training.

This option is not a training level.

Initialize Training allows the operator to make several choices in setting up the training scenario. If there is no instructor present it is possible to select whether or not the weapon will move and to download a scenario or offload data. If an instructor is present, then the scenario may be edited and failures may be introduced, in addition to the items mentioned previously.

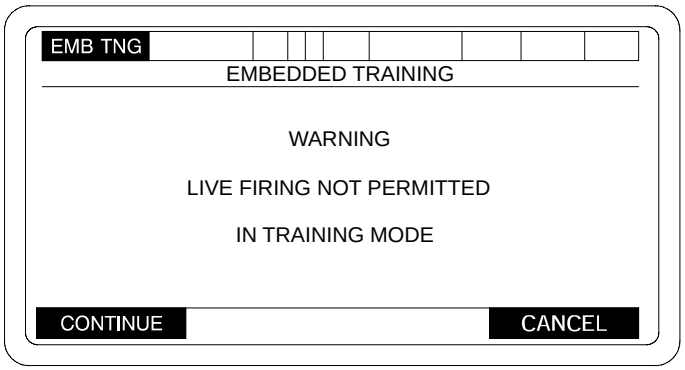


06pc236ma

## F.2-3 ENTERING TRAINING MODE.

To begin training, proceed as follows:

a. Enter the training mode of operation.

(1) If the AFCS/PDFCS is OFF, ensure vehicle MASTER switch is ON, the PCU/PCU - 2 circuit breakers are in the ON position, then turn the DU/PDFCS power switch ON. Refer to System Power-Up, para N-6.1 for AFCS or O-6.1 for PDFCS.

(2) If the AFCS/PDFCS is ON, go to the SETUP AND INFORMATION menu and select SYSTEM RESTART.

First a POWER UP STATUS menu, then a SELECT OPERATIONAL MODE menu, will be displayed.

b. Set DU/PDU training switch to ON (up).

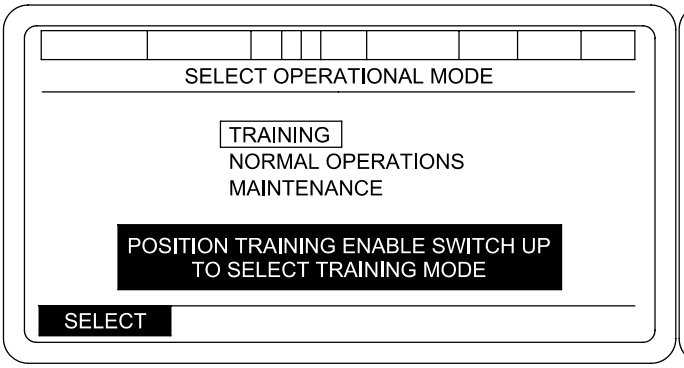


06pc215ma

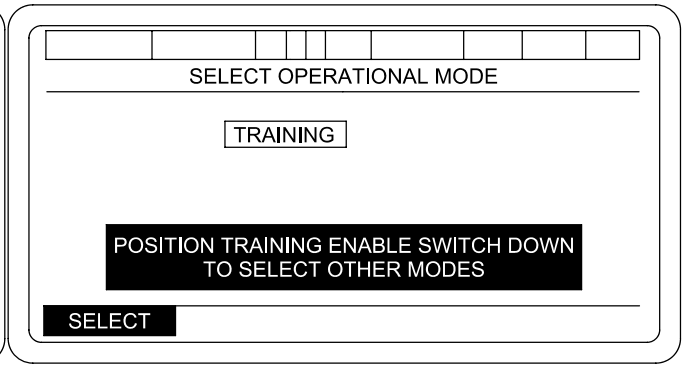


06pc216ma

c. Press SELECT key. The EMBEDDED TRAINING MAIN MENU will be displayed.

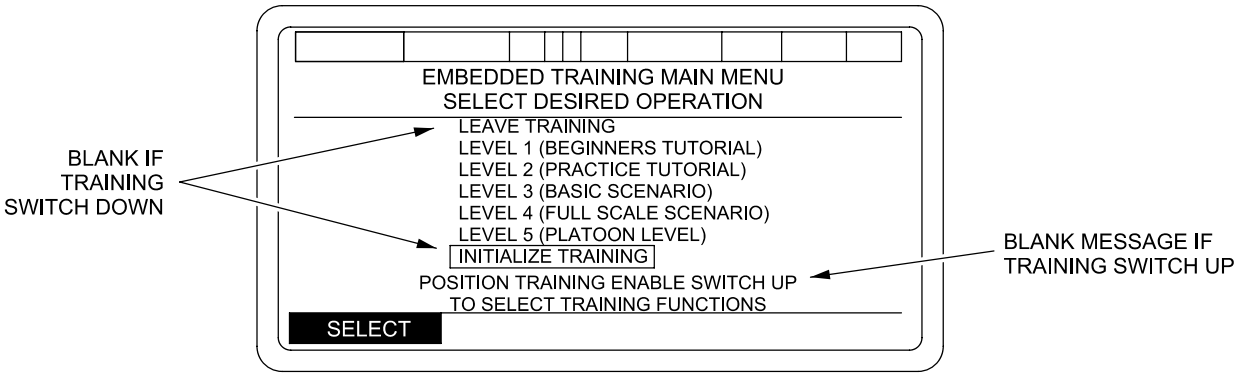


06pc217ma

**NOTE**

If BCWC or NAV is not operational, then the following will not be displayed.

LEVEL 3 (BASIC SCENARIO)
LEVEL 4 (FULL SCALE SCENARIO) and
INITIALIZE TRAINING

## F.2-3 ENTERING TRAINING MODE - CONTINUED

d. Select desired training level or Initialize Training.

(1) Use the arrow keys to box the desired selection.

(2) Press SELECT key.

## F.2-4 LEVEL OF OPERATION.

Sections F.2-4 thru F.2-5.5 explain the operation of Level 1, Level 2, Level 3, Level 4, and Initialize Training.

### F.2-4.1 Level 1.

Selection of training Level 1 will provide the operator with information concerning the DU/PDU keys, menu, layout, use of menus, and menu editing.

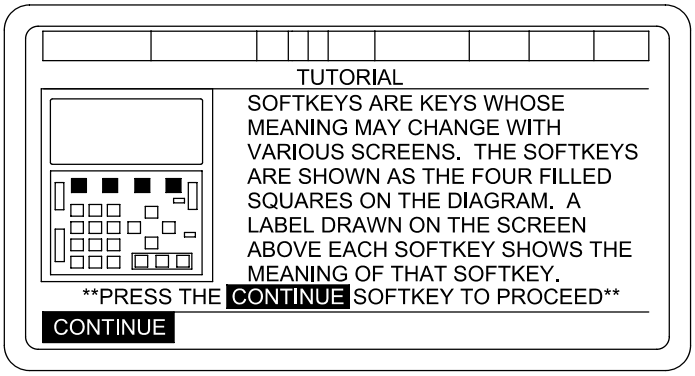


06pc287ta

**Example of Level 1 Training**

### F.2-4.2 Level 2.

Selection of Level 2 will provide the operator with step-by-step drills. A menu will allow either selection of a specific function or drill or a complete (but simplified) sequence of instructions which represent normal AFCS/PDFCS Operation. You will have the option to repeat this training level or proceed to next higher (or lower) level. Any data required for input to AFCS/PDFCS (initialization point data, ammo inventory, etc.) will be provided. Performance measurement is not available at this level.

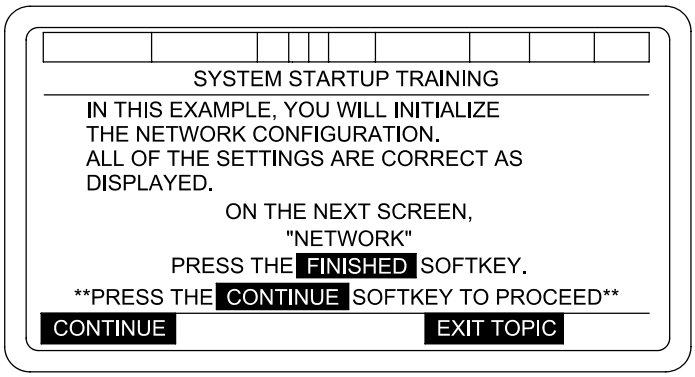


06pc288ta

## F.2-4 LEVEL OF OPERATION - CONTINUED

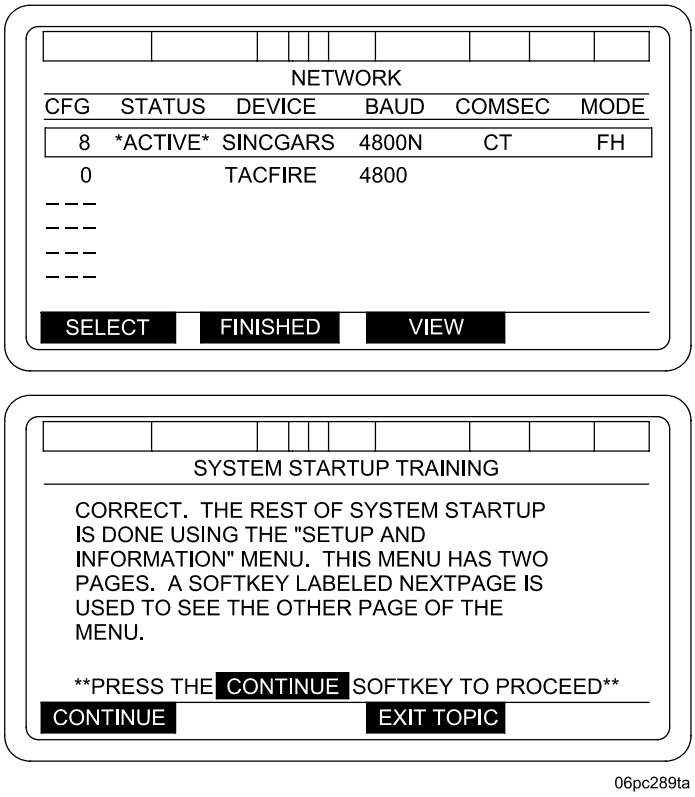


06pc289ta

**Example of Level 2 Training**

## F.2-4 LEVEL OF OPERATION - CONTINUED

### F.2-4.3 Levels 3 and 4.

If Level 3 is selected you will receive Scenario Training by Event. Each scenario event will be presented to you one at a time with each event completing before next event is presented. Initialization entries will allow selection of scenario type, enable or disable state for faults, and provide a default ammunition inventory. When faults are allowed, each fault will be a separate scenario event. Performance measurement will be provided for this level of training.

To perform Level 3 or Level 4 Training use the following procedure:

a. Use arrow keys on DU/PDU to move box to Level 3 (Basic Scenario) or Level 4 (Full Scale Scenario) on the EMBEDDED TRAINING MAIN MENU.

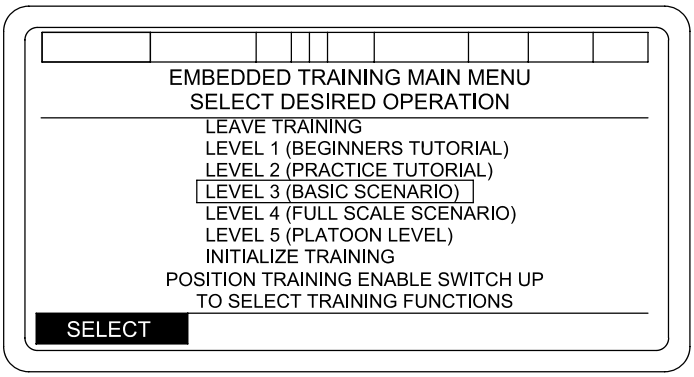


06pc222ma

**NOTE**

If BCWC or NAV is not operational, then the following will not be displayed.

LEVEL 3 (BASIC SCENARIO)
LEVEL 4 (FULL SCALE SCENARIO) and
INITIALIZE TRAINING

b. Press key beneath SELECT. This will cause the SELECT METHOD OF SAVING PERFORMANCE DATA menu to appear.

c. Using arrow keys, move box to desired selection.

# F.2-4 LEVEL OF OPERATION - CONTINUED

## F.2-4.3 Levels 3 and 4 - Continued

**NOTE**

Pressing the key under CANCEL will cause EMBEDDED TRAINING main menu to be displayed

(1) Selection of ADD PERFORMANCE DATA TO EXISTING line will cause data collected during next scenario to be added to data in the file.

(2) Selection of CREATE NEW PERFORMANCE DATA RECORD line will cause data previously collected to be lost.

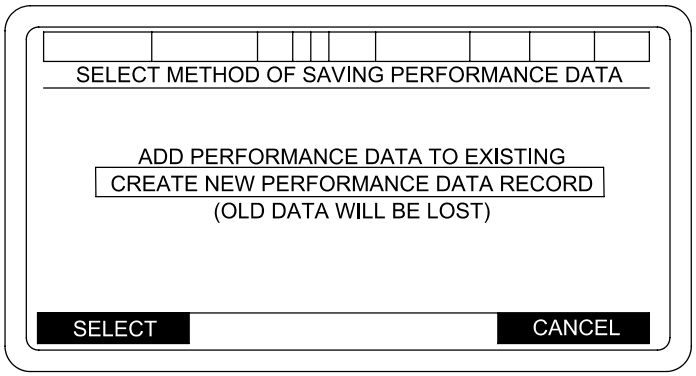


06pc223ma

## F.2-4 LEVEL OF OPERATION - CONTINUED

### F.2-4.3 Levels 3 and 4 - Continued

d. Press the key under SELECT for desired method of saving performance data. A SELECT SCENARIO TO RUN menu will be displayed.

e. Using arrow keys, move box to desired selection.

**NOTE**

Pressing the key under CANCEL will return the SELECT METHOD OF SAVING PERFORMANCE DATA menu to the display.

(1) A “BALANCED” scenario has a ratio of Fire Missions to Moves of 4/1.

(2) A “SHOOT HEAVY” scenario has a ratio of Fire Missions to Moves of 8/1.

(3) A “MOVE HEAVY” scenario has a ratio of Fire Missions to Moves of 2/1.

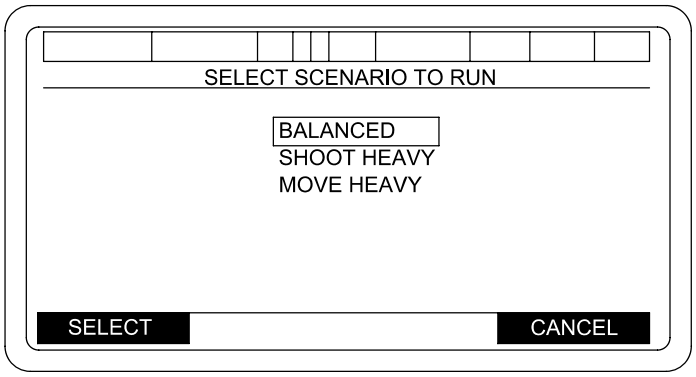


06pc224ma

## F.2-4 LEVEL OF OPERATION - CONTINUED

### F.2-4.3 Levels 3 and 4 - Continued

f. Press the key under SELECT for desired scenario. After a scenario has been selected, the DEFINE SCENARIO AREAS menu (Grid Zone) will appear.

**NOTE**

Data entered in the DEFINE SCENARIO AREAS menu must indicate the howitzer's current location. It must be the "True Life" location of the howitzer. Enter data prior to changing + or - sign.

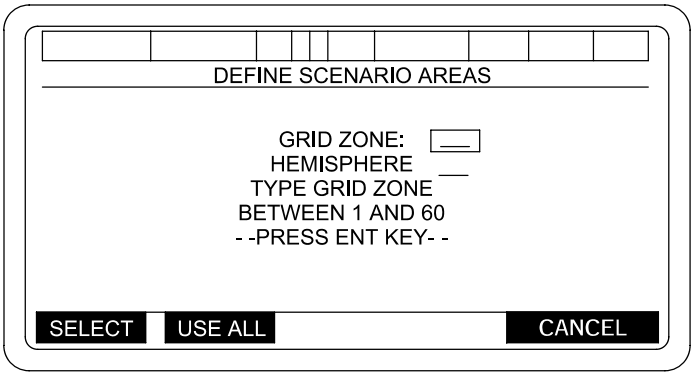


06pc225mc

g. Enter desired grid zone and press ENT key on the DU panel/keypad. Select proper HEMISPHERE. Values are NORTH or SOUTH. Press USE ALL key to display the DEFINE SCENARIO AREAS menu.

**NOTE**

AFCS will set the spheroid for training levels 3 and 4 to WGS 84.

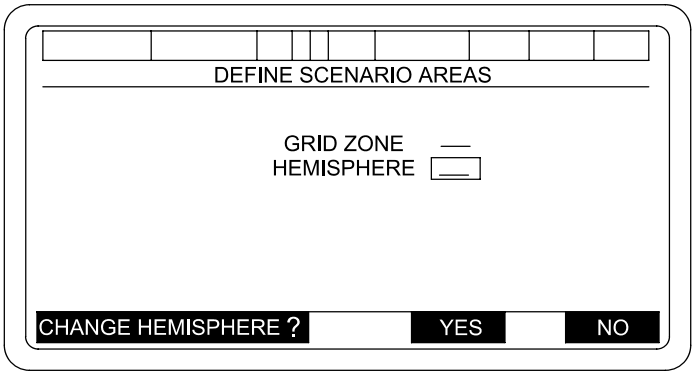


06pc225md

# F.2-4 LEVEL OF OPERATION - CONTINUED

## F.2-4.3 Levels 3 and 4 - Continued

(1) The following prompts will appear on the DEFINE SCENARIO AREAS menu:

- TYPE EASTING OF SW CORNER BETWEEN 0 AND 999999 -PRESS ENT-
- TYPE EASTING OF NE CORNER BETWEEN 0 AND 999999 -PRESS ENT-
- TYPE NORTHING OF SW CORNER BETWEEN 0 AND 9999999 -PRESS ENT-
- TYPE NORTHING OF NE CORNER BETWEEN 0 AND 9999999 -PRESS ENT-

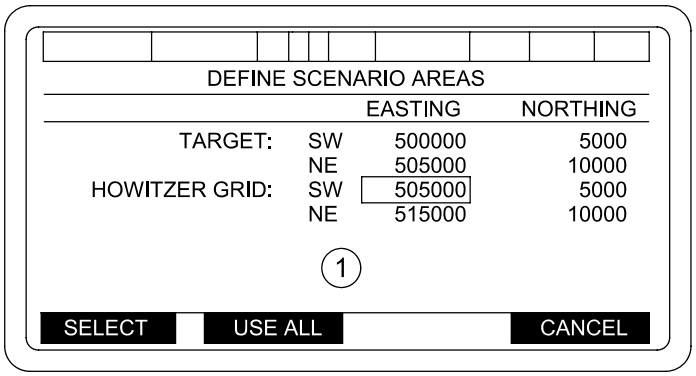


06pc290t

## F.2-4 LEVEL OF OPERATION - CONTINUED

### F.2-4.3 Levels 3 and 4 - Continued

h. Enter information for TARGET on DEFINE SCENARIO AREAS menu. This the area in which all target locations must lie (within a 10,000 square meter area). The target grid consists of Northing and Easting of southwest corner and Northing and Easting of northeast corner.

(1) Using the arrow keys, move box to TARGET SW field under Easting on the DEFINE SCENARIO AREAS menu.

(2) Press the key under SELECT, then type in grid coordinates of the easting of the southwest corner of desired operational area and press ENT key on DU/keypad.

(3) Using arrow keys, move box to TARGET SW under Northing and press the key under SELECT. Type in Northing grid coorinates of the southwest corner of operational area and press ENT key on DU/keypad.

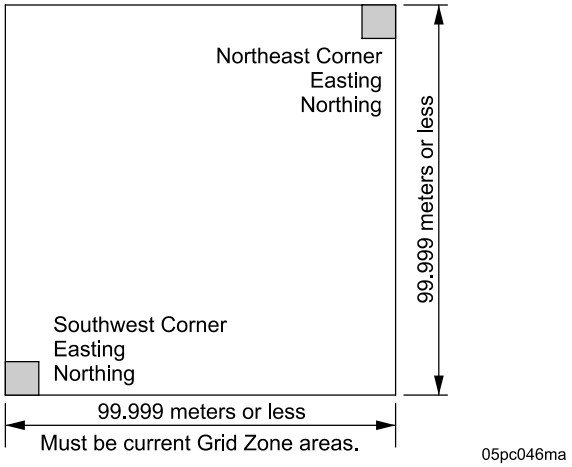


Target Grid

(4) Using the arrow keys, move the box to TARGET NE under the Easting on the DEFINE SCENARIO AREAS menu and press the key under SELECT. Type in the Easting grid coordinates of the Northwest corner of the operational area and press the ENT key on the DU/keypad.

(5) Using the arrow keys on the DU, move the cursor to TARGET NE under the Northing and press the key under SELECT of the DEFINE SCENARIO AREAS menu. Type in Northing of Northeast corner of the operational area and press ENT key on DU/keypad.

i. Enter information for HOWITZER GRID on DEFINE SCENARIO AREAS menu. This is the area to which all howitzer movements must be confined (10 km or less). It consists of Northing and Easting of southwest corner and Northing and Easting of northeast corner. If howitzer is to remain stationary, refer to note below.

## F.2-4 LEVEL OF OPERATION - CONTINUED

### F.2-4.3 Levels 3 and 4 - Continued

**NOTE**

If vehicle is to remain stationary during Level 3 and 4 Training define howitzer area map 1 meter by 1 meter (this will prevent difficulties during a Move Order mission).

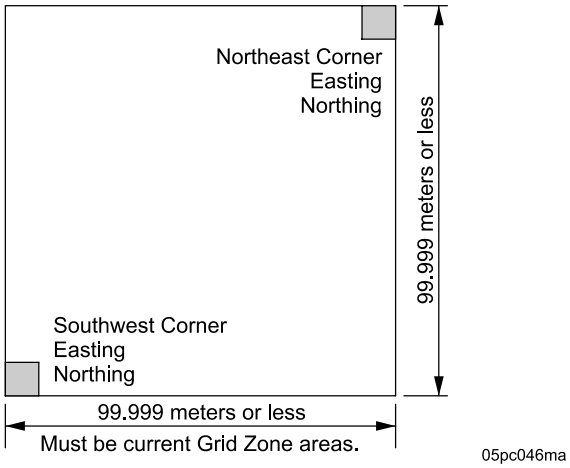


Howitzer Grid

**NOTE**

The maximum distance between the farmost corners of the Target Grid and Howitzer Grid must be less than 20 km to develop simulated fire missions (required for real ballistic computation).

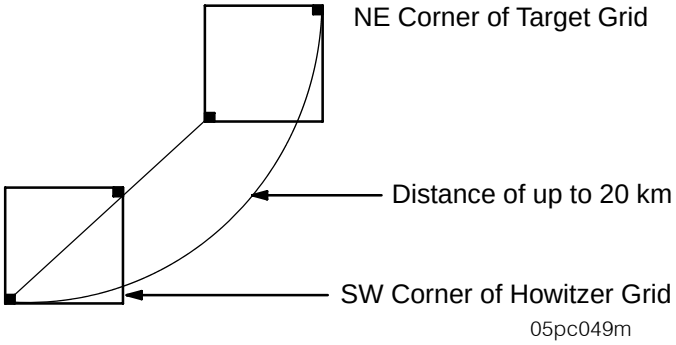


j. To enter Howitzer grid data use the same procedures described for TARGET.

**NOTE**

If a target or howitzer coordinate which is outside map grid or is inconsistent with other values is entered, an Alert of either “ILLEGAL TARGET AREA” “ACK” or “ILLEGAL HOWITZER AREA” “ACK”will be displayed. Press the ACK key for the operator Alert and enter correct/proper data.

k. When all the desired data has been entered on the DEFINE SCENARIO AREAS menus, press the USE ALL key. This will force the AFCS/PDFCS into initialization as in Normal Operations.

## F.2-4 LEVEL OF OPERATION - CONTINUED

### F.2-4.3 Levels 3 and 4 - Continued

l. Initialize AFCS/PDFCS. Initialization of the AFCS/PDFCS is done according to initialization described in Normal Operations with the following exceptions:

"True Life" data required for NAV RESTART (initialization point, grid and grid zone).

AZIMUTH OF FIRE data in SECTOR OF FIRE menu must be the rough azimuth from Howitzer Grid Southwest Corner to Target Grid Southwest Corner as shown in illustration.

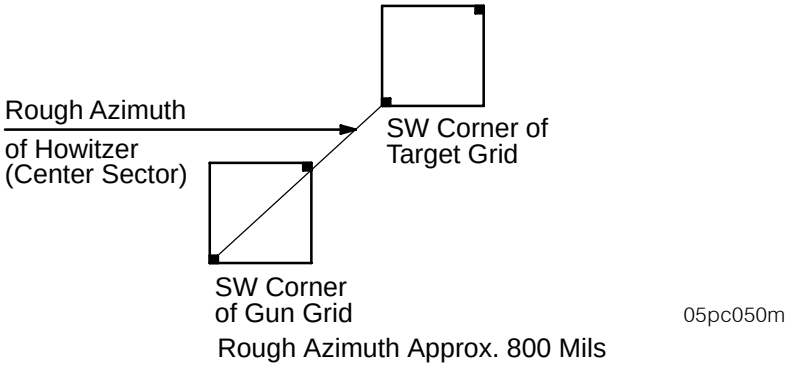


Other initialization data to be provided by the instructor.

m. Enter Embedded Trainer Ammunition Inventory information.

To use the default ammunition inventory, perform the following procedure while doing the AFCS/PDFCS initialization:

Embedded Trainer Ammunition Inventory - Basic Load

PROJECTILES

| | | |
|---|---|---|
| M483A1 (DPICM) | 20 | Total of 39 |
| M107 (HE) | 10 | |
| M825 (SMOKE) | 03 | |
| M549A1 (RAP) | 02 | |
| M485 (ILLUM) | 02 | |
| M712 (CPH) | 02 | |

PROPELLANTS

| | | |
|---|---|---|
| M4A2 | 15 | Total of 56 |
| M119A2 | 15 | |
| M203 | 08 | |
| M3A1 | 18 | |

FUZES

| | | |
|---|---|---|
| M577 (MT) | 28 | Total of 50 |
| M582 (MTSQ) | 06 | |
| M78 (CP) | 04 | |
| M557 (PD) | 12 | |

# F.2-4 LEVEL OF OPERATION - CONTINUED

## F.2-4.3 Levels 3 and 4 - Continued

(1) On the SETUP AND INFORMATION menu box AMMO INVENTORY; then press the key under SELECT. An INVENTORY MANAGEMENT menu will be displayed.

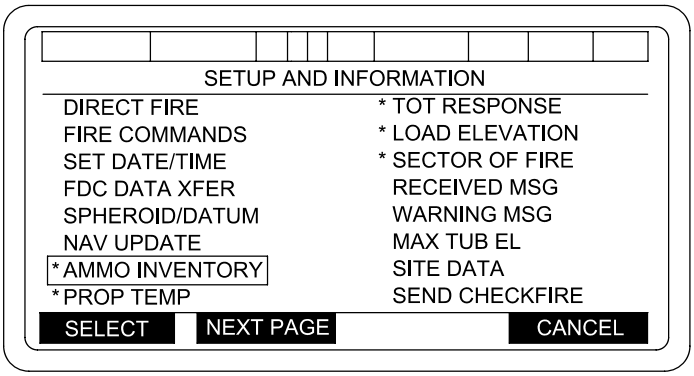


06pc291t

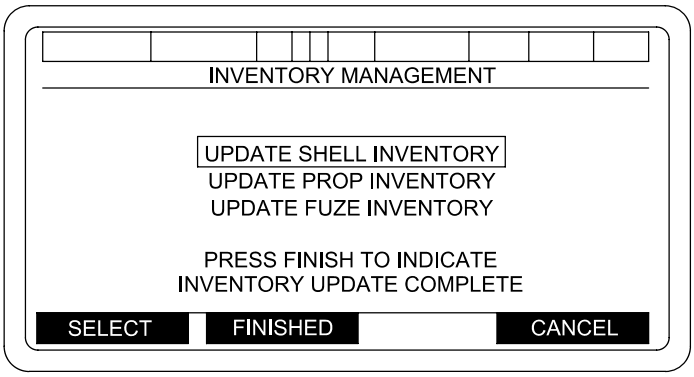


06pc228ma

(2) Press the key under FINISHED. The SETUP AND INFORMATION menu will be displayed. This action will complete the AFCS/PDFCS initialization process (all asterisked items must be initialized).

# F.2-4 LEVEL OF OPERATION - CONTINUED

## F.2-4.3 Levels 3 and 4 - Continued

n. Store default ammo inventory. When Initialization is complete (alignment countdown finished), press CANCEL key in the SETUP AND INFORMATION menu to display a MOVE ORDER in level 3 or SECTION IN ORDER at INITIALIZATION POINT in level 4.

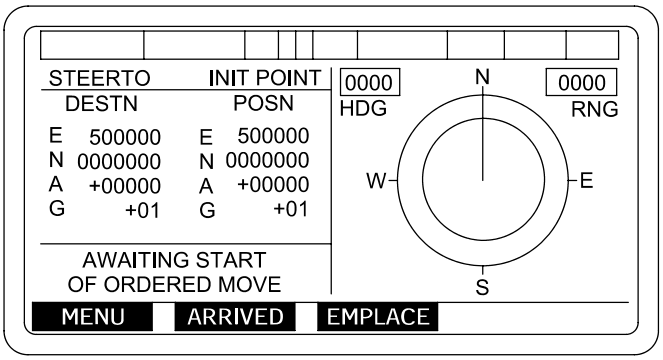


06pc229ma

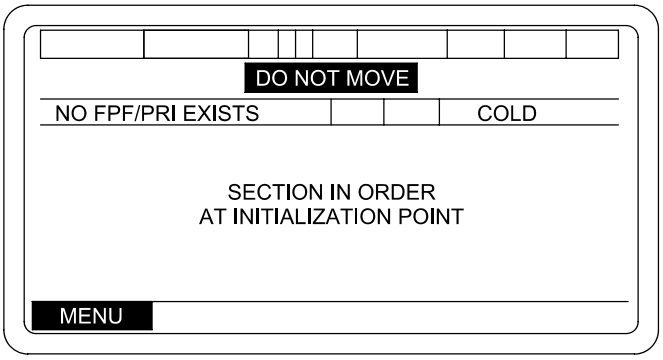


06pc230ma

(1) To store the default Ammo Inventory, press the menu key to display SETUP AND INFORMATION menu.

# F.2-4 LEVEL OF OPERATION - CONTINUED

## F.2-4.3 Levels 3 and 4 - Continued

(2) Move the box to AMMO INVENTORY and press the key under SELECT. An INVENTORY MANAGEMENT menu will be displayed.

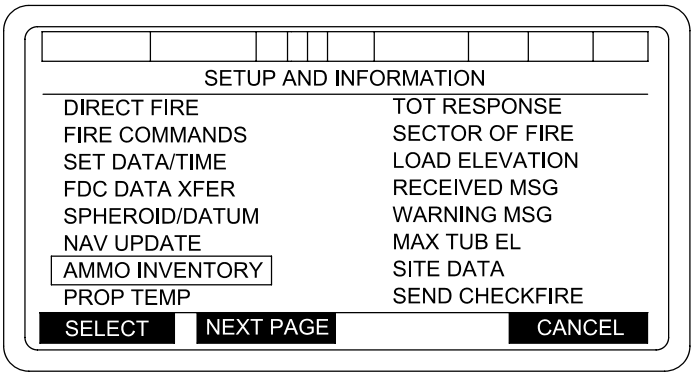


06pc291t

(3) Using the arrow keys, move box to EDIT FDC PROVIDED on the INVENTORY MANAGEMENT menu; then press the key under SELECT. Another INVENTORY MANAGEMENT menu will be displayed.

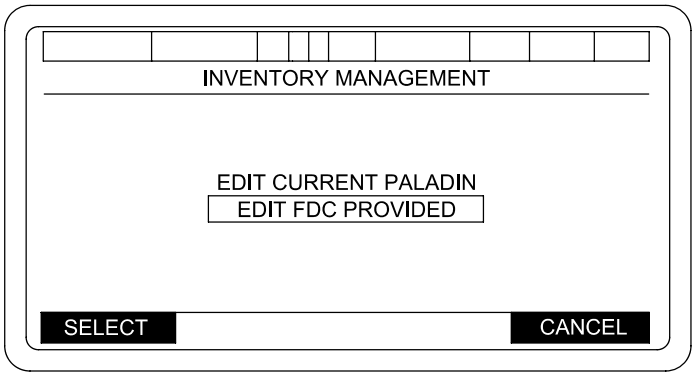


06pc292ta

## F.2-4 LEVEL OF OPERATION - CONTINUED

### F.2-4.3 Levels 3 and 4 - Continued

(4) Press the key under FINISHED on this INVENTORY MANAGEMENT menu to store the default Ammo Inventory into the trainer.

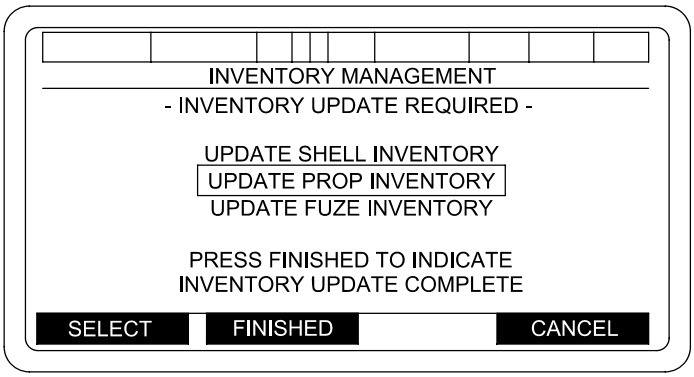


06pc233ma

o. To exit the training mode while in a scenario, switch the trainer switch on the DU panel/keypad to the OFF position. The EMBEDDED TRAINING MAIN MENU will be displayed.

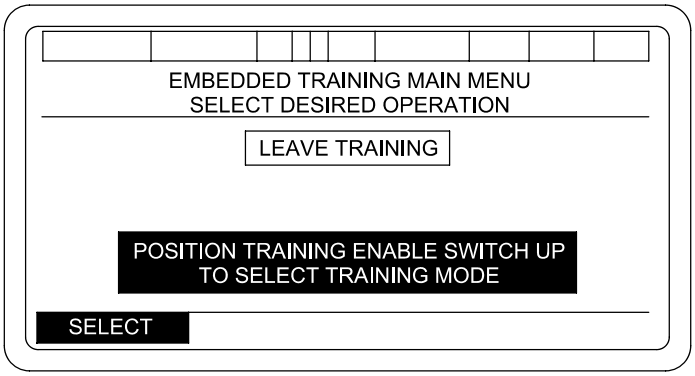


06pc234ma

p. Press the key under SELECT. The system will automatically do a restart and return to the SELECT OPERATIONAL MODE menu.

## F.2-5 INITIALIZE TRAINING OPTION

Initialize Training will allow selection of scenario type, enable/disable state for faults, and provide a default Ammunition Inventory. If faults are allowed, faults will be inserted into the scenario sequence to emulate degraded system operation. This will allow you to respond to faults as you would in a “Real World” situation. Additional events will be enabled in scenarios to emulate interruption of normal function/task flow. Performance measurement will be provided for this level of training. To use the Initialize Training option perform the following procedures:

a. Use the arrow keys to move box to INITIALIZE TRAINING on the EMBEDDED TRAINING MAIN Menu.

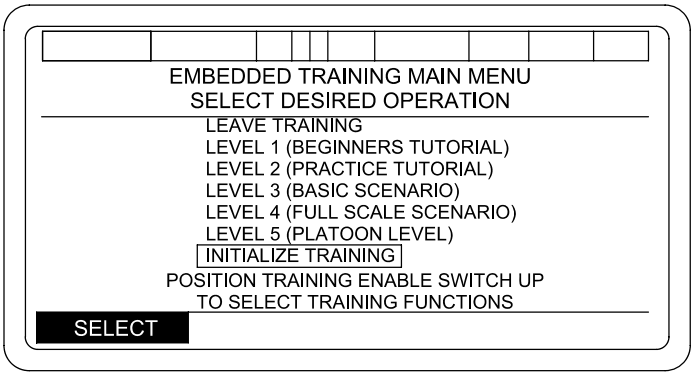


06pc235ma

**NOTE**

If BCWC or NAV is not operational, then the following will not be displayed.

LEVEL 3 (BASIC SCENARIO)
LEVEL 4 (FULL SCALE SCENARIO) and
INITIALIZE TRAINING

b. Press key under SELECT. An INSTRUCTOR ENTRY menu will be displayed.

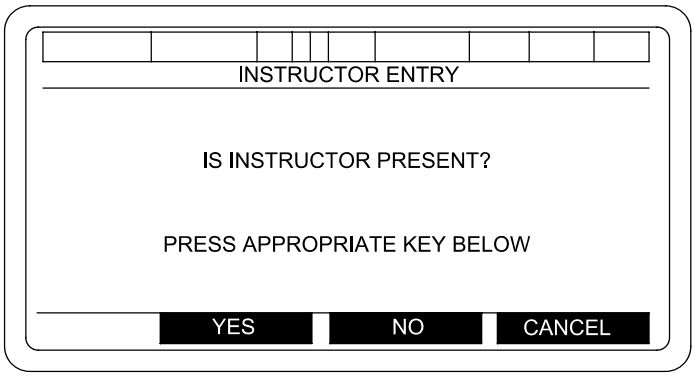


06pc236mb

c. Press either the YES or NO key. This will cause a WEAPON MOVEMENT ENTRY menu to be displayed.

## F.2-5 INITIALIZE TRAINING OPTION - CONTINUED

d. The WEAPON MOVEMENT ENTRY menu allows you to select whether the weapon will move during the training scenario or remain stationary. One of the 2 menus shown will appear, depending upon whether the weapon is in the enable or disable mode.

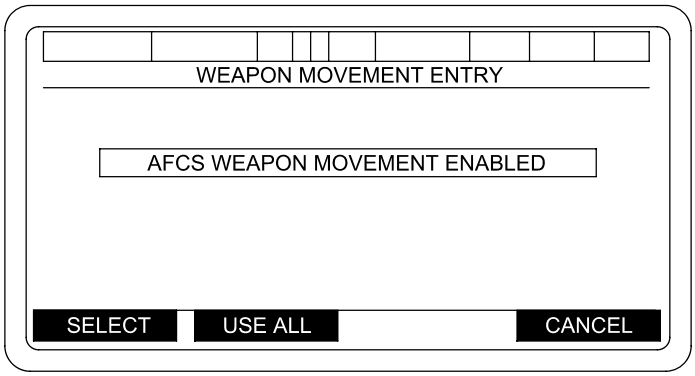


06pc237mb

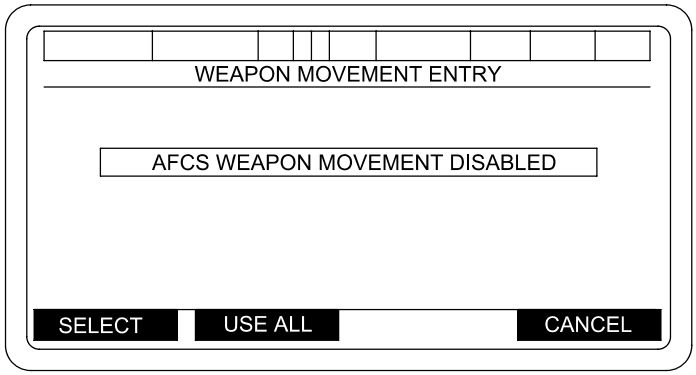


06pc238mb

## F.2-5 INITIALIZE TRAINING OPTION - CONTINUED

e. To change from enabled to disabled or from disabled to enabled, press the key under SELECT. One of the following menus will be displayed. To change the Weapon Movement, press the key under YES. If a change is not desired at this time press the key under NO.

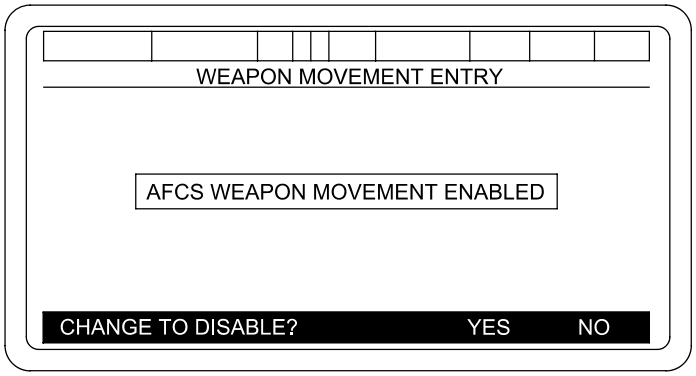


06pc239mb

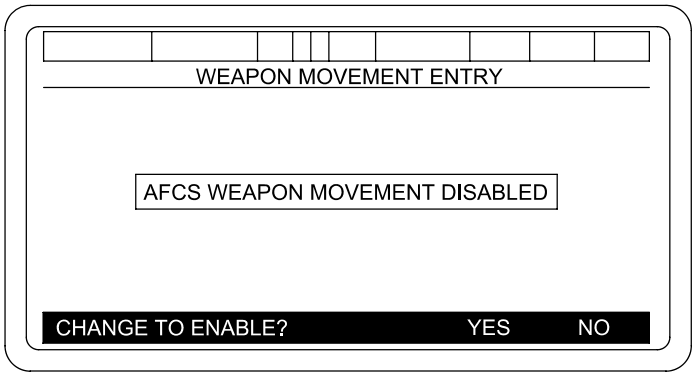


06pc240mb

**NOTE**

If WEAPON MOVEMENT is DISABLED, AFCS will disable the LOAD, LAY and STOW keys.

## F.2-5 INITIALIZE TRAINING OPTION - CONTINUED

f. To enter the Weapon Movement Entry, press key under USE ALL. A SELECT TRAINING FUNCTION menu will be displayed.

**NOTE**

The following options on the SELECT TRAINING FUNCTION menu will not be available if NO was pressed on the INSTRUCTOR ENTRY menu.

ALTER EXISTING SCENARIO
EDIT FAILURES

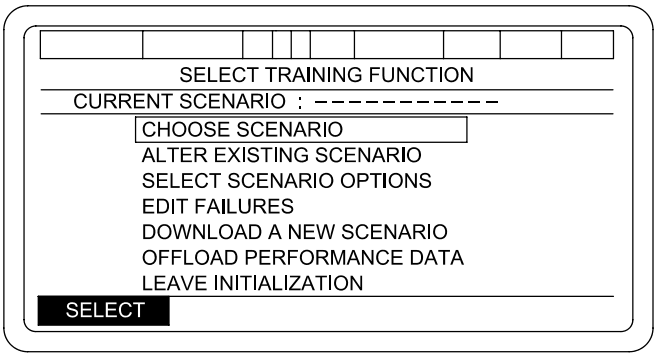


V7.00 SOFTWARE

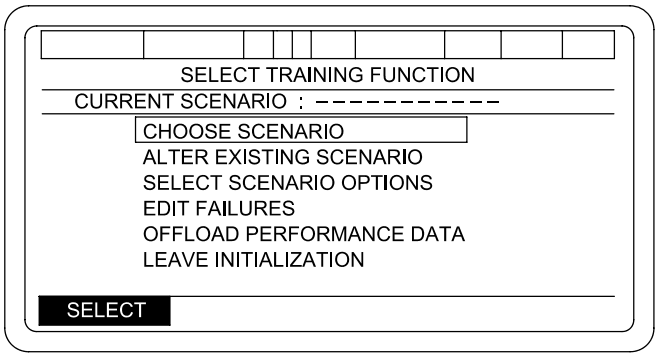


V7P.00 SOFTWARE

06pc297tb

### F.2-5.1 Scenario.

F.2-5.1.1 Choose Scenario.

This option allows the operator to choose the scenario that he wants to alter/change.

a. Using the arrow keys, move box to CHOOSE SCENARIO on the SELECT TRAINING FUNCTION menu and press the key under SELECT. A SELECT SCENARIO TO RUN menu will be displayed.

## F.2-5 INITIALIZE TRAINING OPTION - CONTINUED

### F.2-5.1 Scenario - Continued

b. Move box using arrow keys on DU/keypad to the desired scenario to be changed, then press SELECT key. This will cause the SELECT TRAINING FUNCTION menu to be redisplayed.

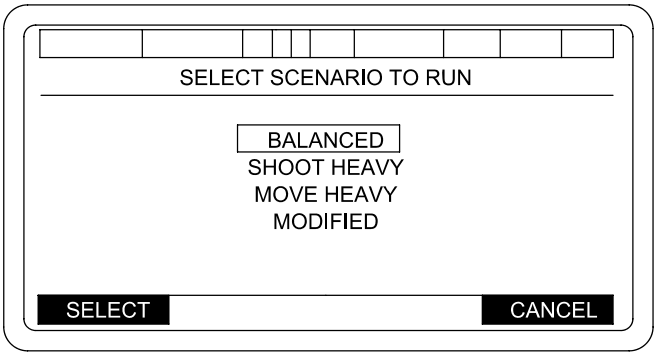


06pc407mf

F.2-5.1.2 Alter Existing Scenario.

This option allows modification of the current scenario. The CURRENT SCENARIO shown in the SELECT TRAINING FUNCTION menu is the one to be modified.

a. Using the arrow keys on the DU/keypad, move the box to ALTER EXISTING SCENARIO, then press the key under SELECT. A SCENARIO SUMMARY menu will be displayed.

SCENARIO SUMMARY Menu

b. The SCENARIO SUMMARY menu allows a single step in the scenario to be changed. To accomplish this, use the arrow keys to move the cursor to the desired step to be changed and press the key under SELECT. An ALTER SCENARIO LOCATION menu will be displayed.

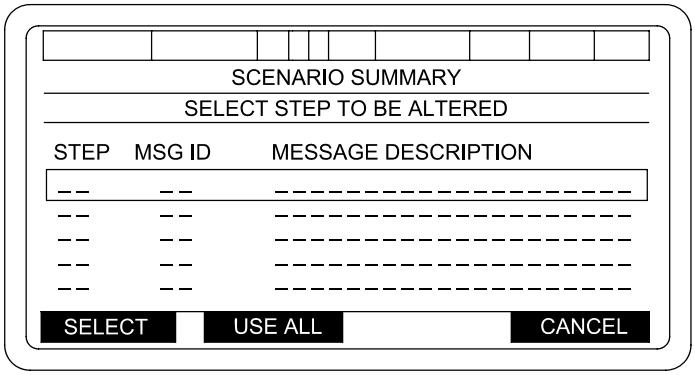


06pc293ta

## F.2-5 INITIALIZE TRAINING OPTION - CONTINUED

### F.2-5.1 Scenario - Continued

ALTER SCENARIO LOCATION Menu

**NOTE**

The LOCATION OFFSET will be Easting and Northing in meters, measured from southwest corner of appropriate area; Target grid or Howitzer grid depending on whether Message ID is for Fire Mission or Move Mission.

c. To alter a location, move cursor to EASTING or NORTHING and press the key under SELECT, type in desired offset (0 - 9999 meters) and press ENT key on DU/keypad. When both desired offsets have been entered, press key under USE ALL. The SCENARIO SUMMARY menu is then displayed. When all desired steps of the SCENARIO SUMMARY menu have been changed/altered, press the USE ALL key. This will cause the SELECT TRAINING FUNCTION menu to be redisplayed.

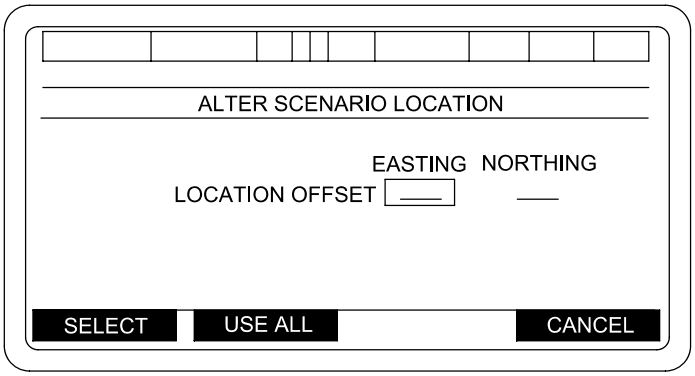


06pc243ma

# F.2-5 INITIALIZE TRAINING OPTION - CONTINUED

## F.2-5.1 Scenario - Continued

F.2-5.1.3 Select Scenario Options.

This menu allows the operator to select options in a scenario. Use the following steps.

a. Move box to SELECT SCENARIO OPTIONS on the SELECT TRAINING FUNCTION menu and press the key under SELECT to display the SELECT SCENARIO OPTIONS menu.

b. The Scenario Options will be listed as “YES” or “NO” when the menu appears on the display. To make a change, use the arrow keys to move box to the desired line and press the SELECT key.

   A prompt will appear (change to YES - YES/NO or change to NO - YES/NO). Make the desired choice. That choice will then appear on the menu.

c. When desired options have been changed, press the key under USE ALL. USE ALL will enter any changes and return you to the SELECT TRAINING FUNCTION menu.

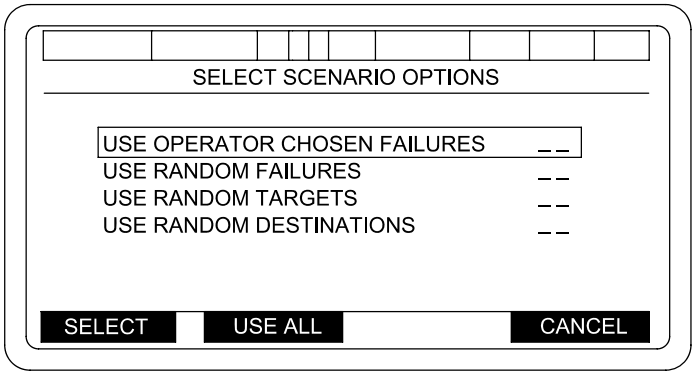


06pc294ta

F.2-5.1.4 Edit Failures.

This option permits the operator to change or define a failure operation in a scenario. Perform the following steps to accomplish failure changes.

a. Using the arrow keys move the box to EDIT FAILURES on the Select Training Function menu and press the key under SELECT. A FAILURE OPERATIONS menu will be displayed.

## F.2-5 INITIALIZE TRAINING OPTION - CONTINUED

### F.2-5.1 Scenario - Continued

**NOTE**

Digital radio simulated failure will be allowed only if YES was entered at the INSTRUCTOR PRESENT display.

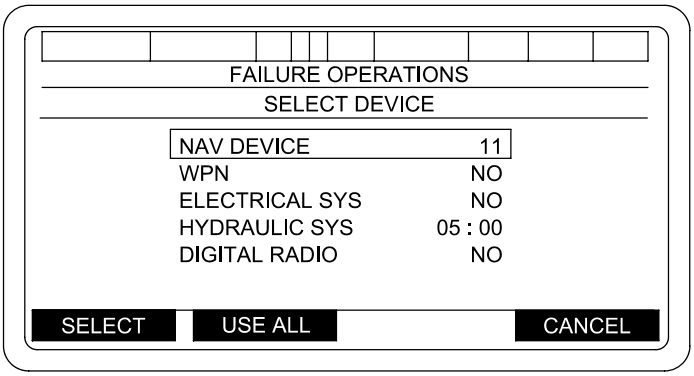


06pc082mc

**NOTE**

To the right of each device shown in the menu there may appear the word “NO” if no failure for the device is desired, a time if a time failure has been selected or a number between 1 and 99 if a step failure has been selected.

b. FAILURE OPERATIONS menu allows the operator to program the failures that will occur during the training scenario. To select a device/system, use the arrow keys to move box to selection, then press the key under SELECT. The SELECT TIME OR STEP ACTIVATION menu will be displayed. USE OPERATOR SELECTED FAILURES (YES) on the SELECT SCENARIO OPTIONS menu must have been selected or this step will not work.

## F.2-5 INITIALIZE TRAINING OPTION - CONTINUED

### F.2-5.1 Scenario - Continued

c. The SELECT TIME OR STEP ACTIVATION menu allows the operator to have the selected device fail at a particular time in the scenario or have the device fail at a particular step in the scenario.

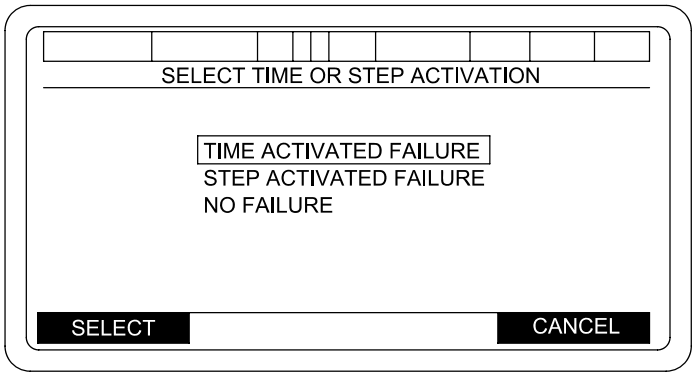


06pc245ma

(1) For a time failure, use the arrow keys to move the cursor to TIME ACTIVATED FAILURE on the SELECT TIME OR STEP ACTIVATION menu and press the key under SELECT. A TIME OF FAILURE menu will appear on the display.

(2) Type in the time for the failure to occur and press the ENT key. This will return the FAILURE OPERATIONS menu to the display and the time entered will appear to the right of the device previously selected.

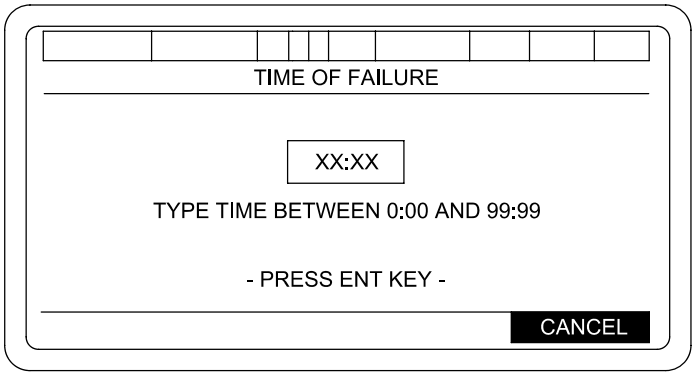


06pc295ta

d. For a Step Failure move the cursor to STEP ACTIVATED FAILURE on the SELECT TIME OR STEP ACTIVATION menu and press the key under SELECT. A STEP OF FAILURE menu will be displayed.

## F.2-5 INITIALIZE TRAINING OPTION - CONTINUED

### F.2-5.1 Scenario - Continued

e. Type in the step where the failure is to occur and press the ENT key. This will return the display to the FAILURE OPERATIONS menu and the step number you entered will appear to the right of the device you previously selected.

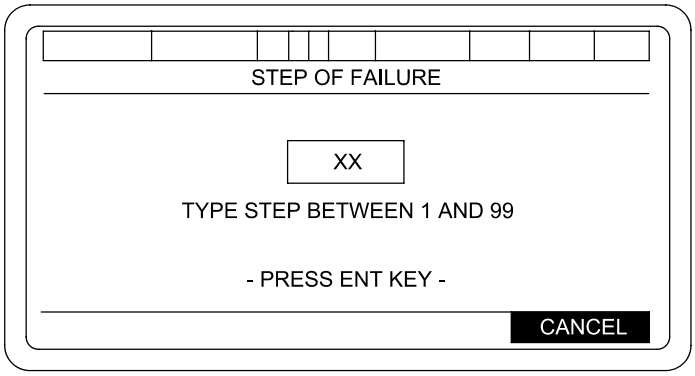


06pc296ta

f. If NO FAILURE is selected from the SELECT TIME OR STEP ACTIVATION menu, the FAILURE OPERATIONS menu will be returned to the display and the word “NO” will appear next to the device previously selected.

**NOTE**

The above operation must be performed for each device/system selected for failures.

### F.2-5.2 Leave Initialization.

When all desired changes to the Scenario have been completed, move the cursor to LEAVE INITIALIZATION on the SELECT TRAINING FUNCTION menu and press key under SELECT. This will return the EMBEDDED TRAINING MAIN MENU to the display.

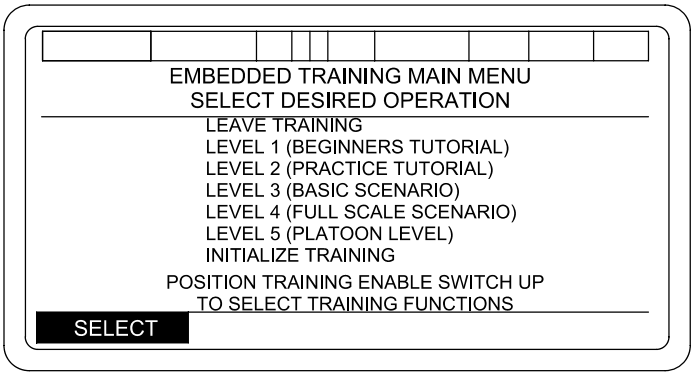


06pc248ma

**NOTE**

If BCWC or NAV is not operational, then the following will not be displayed.

LEVEL 3 (BASIC SCENARIO)
LEVEL 4 (FULL SCALE SCENARIO) and
INITIALIZE TRAINING

## F.2-5 INITIALIZE TRAINING OPTION - CONTINUED

### F.2-5.3 Running a Modified Scenario.

a. Select Level 3 (Basic Scenario) or Level 4 (Full Scale Scenario) from the MAIN MENU. This will cause a SELECT METHOD OF SAVING PERFORMANCE DATA menu to be displayed.

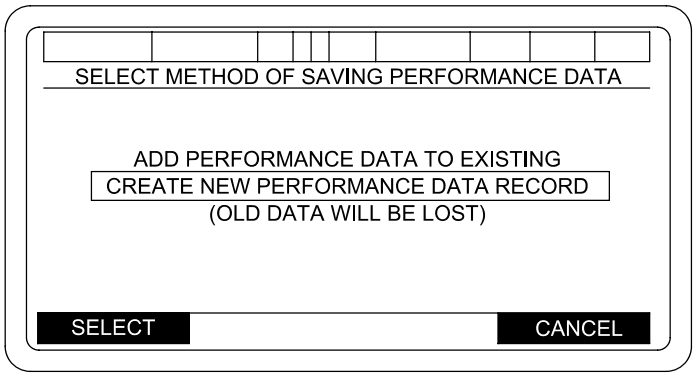


06pc249ma

b. Selection of either method will cause a SELECT SCENARIO TO RUN menu to appear on the display.

c. Move the cursor to MODIFIED on the SELECT SCENARIO TO RUN and press the key under SELECT.

**NOTE**

A Modified scenario will be available only if an existing scenario has been changed by using the options available under INITIALIZE TRAINING or a scenario has been put into the trainer using the serial port. If no Modified scenario is available, the line Modified will not appear on the menu.

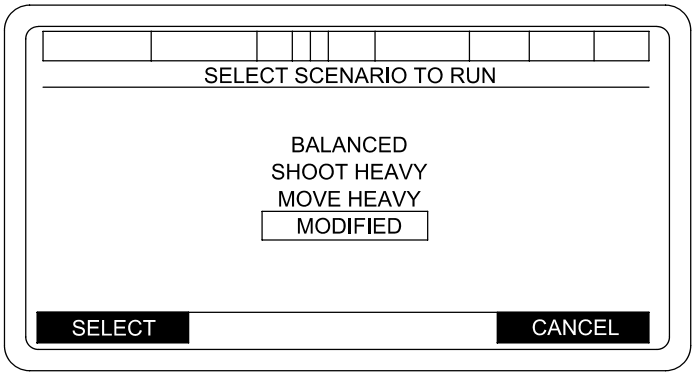


06pc250ma

d. Steps to DEFINE SCENARIO AREAS are same as previously discussed. Initialization for training steps are also the same.

## F.2-5 INITIALIZE TRAINING OPTION - CONTINUED

### F.2-5.4 Download a New Scenario

This option will allow the user to install a customized training scenario which has been developed on an external source into the embedded trainer. This feature will allow the design of a training scenario to meet a specific need.

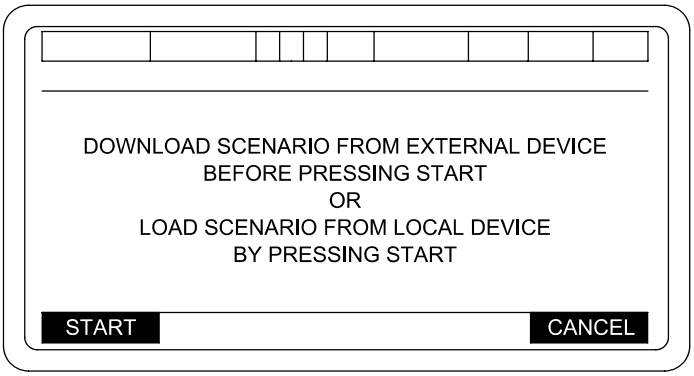


**VERSION 2.0 (AFCS) ONLY**

06pc407mg

a. Select START to begin download process. AFCS will display “DOWNLOAD IN PROGRESS”.

b. If download is successful, AFCS will display “DOWNLOAD COMPLETE”. If not successful, display will be “DOWNLOAD FAILED”.

### F.2-5.5 Offload Performance Data.

This option permits the user to look at the data collected in the performance file of the embedded trainer. The performance file contains data on the following areas:

- Time to Perform Emplacement
- Time to Perform Ammunition Inventory
- Time to Initialize AFCS/PDFCS After Power Up
- Time to Perform Fire Mission
- Crew Precision in Location and Orientation of the Howitzer
- Records unauthorized operator activity during an Embedded Training Scenario
- Any UTE (unable to execute) or BAT (be advised that) messages that are sent

a. To look at the performance data on the display, move the box to OFFLOAD PERFORMANCE DATA on the SELECT TRAINING FUNCTION menu and press the key under SELECT. A SELECT OFFLOAD DEVICE menu will be displayed.

# F.2-5 INITIALIZE TRAINING OPTION - CONTINUED

## F.2-5.5 Offload Performance Data - Continued

**NOTE**

Menus are available to use an external device (V2.0 Software only); however, the device is not currently available.

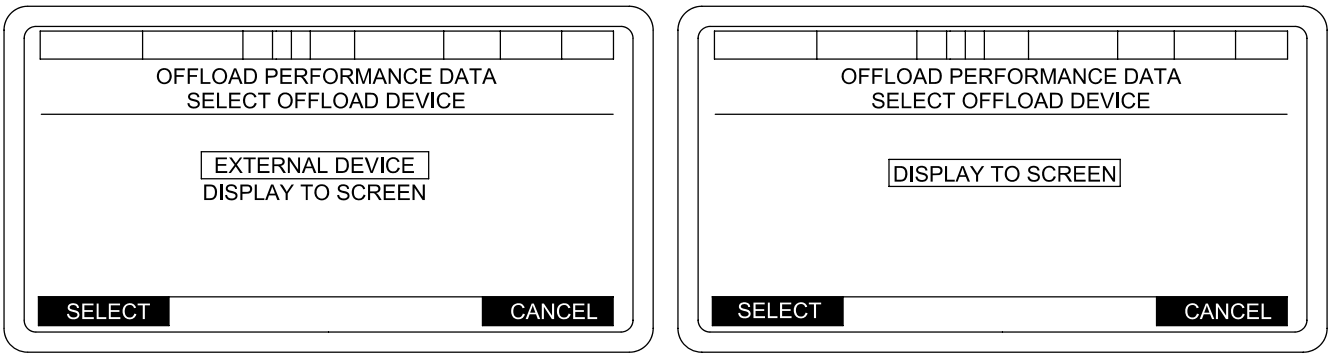


**V2.0 SOFTWARE** **V2P.0 SOFTWARE**

06pc298tb

b. To display the data to the DU/PDU display use the arrow keys to move the box to DISPLAY TO SCREEN and press the key under SELECT. A PERFORMANCE DATA DISPLAY menu will be displayed.

c. To view all data, press key under NEXT PAGE. Use the CANCEL key to exit this menu.

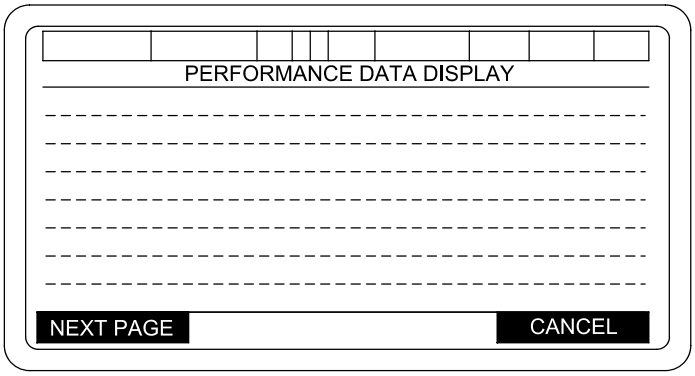


06pc252ma

# APPENDIX G

# PDIU WARNING MESSAGES AND RECONFIGURATION ADVISOR

## G-1 SCOPE.

This appendix contains a list of PDIU warning messages and the associated reconfiguration advisories. Following these advisories will give the best chance of continuing the mission.

## G-2 GENERAL.

When the AFCS is in Normal Operation mode, and the hydraulic system is operational, a system warning issued by the PDIU will display a system warning alert as “W” in field (4) of the display. Also, if the warning is high priority, a HIGH PRIORITY URGENT message will be displayed in field (15), and a “ACK” label will appear in field (16).

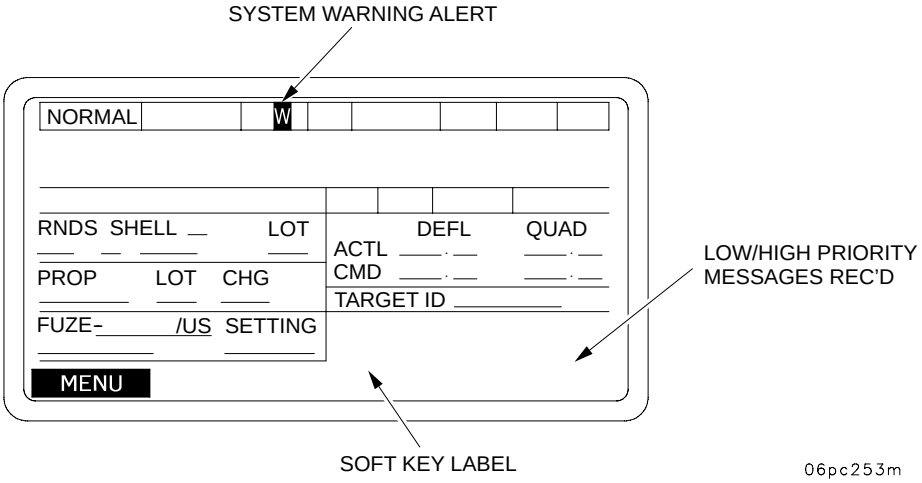


## G-3 ACCESSING WARNING MESSAGES.

a. When mission time allows, the warning message text can be accessed from the NORMAL operation menu by pressing the MENU soft key. This will display a SETUP AND INFORMATION menu.

## G-3 ACCESSING WARNING MESSAGE - CONTINUED

b. To display the warning message menu, select WARNING MSG and press SELECT soft key.

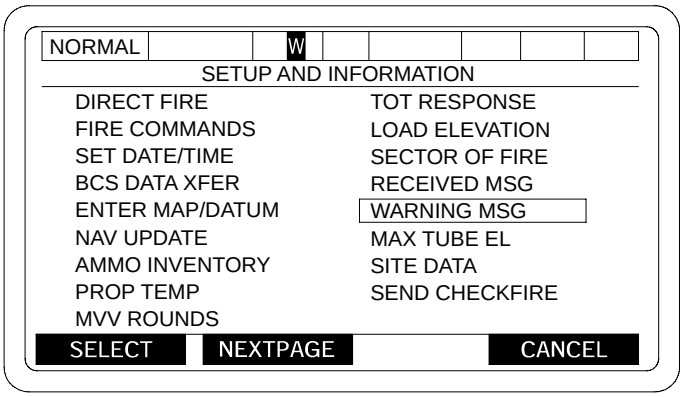


06pc254m

The warning message text will be displayed in area (4) of the screen.

c. If there is more than one message in the queue, a NEXT MSG label will appear over the first soft key. Press this key to display the next message.

d. If there is more than one page to a message, a NEXT PAGE label will appear over the second soft key. Press this key to display the next page of the message.

e. To delete the message being displayed, press the DELETE soft key.

f. To return the SETUP AND INFORMATION menu, press the CANCEL soft key.

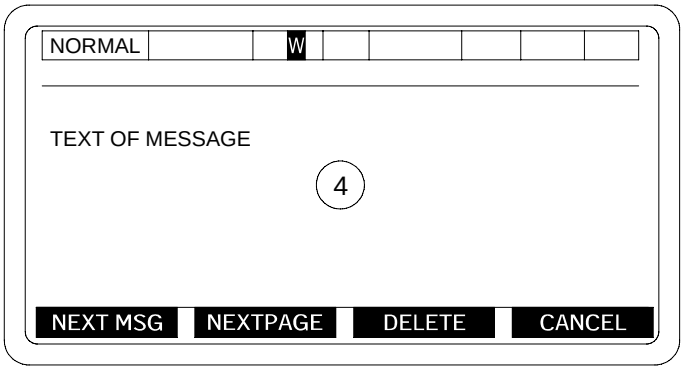


06pc255m

g. The following paragraph contains a listing of the warning/advisor messages.

## G-4 WARNING/ADVISOR MESSAGES

### G-4.1 Operation Mode Warning Messages.

1 HYD FLUID HOT: SHUTDOWN PUMP, MANUAL OPS
NOTIFY UNIT MAINT

2 HYD FLUID PRESSURE LOW: USE HAND RAM
NOTIFY UNIT MAINT

3 LOW HYDRAULIC FLUID LEVEL DETECTED
CHECK FLUID LEVEL

4 PDIU MEASUREMENTS OUT: MANUAL MONITORING
REQUIRED

5 ABNORMAL POWERDOWN DETECTED
VERIFY DATA BASE

6 PDIU FLOWMETER OUT: MONITOR
PRESSURE GAGE

7 PDIU PRESSURE TRANSDUCER OUT: MONITOR
PRESSURE GAGE

8 PDIU TEMPERATURE SENSOR OUT

9 HYD FLUID HOT: ENSURE COOLING FAN IS ON

10 CLOGGED HYD FILTER DETECTED: MONITOR
PRESSURE GAGE

11 HYD POWERPACK DEGRADED: USE HAND RAM
NOTIFY UNIT MAINT

12 EQUILIBRATION ERROR DETECTED

13 HYD FLUID TEMPERATURE BACK TO NORMAL
RESUME NORMAL OPS

14 MINOR PDIU TEMPERATURE SYSTEM ERROR

## G-4 WARNING/ADVISOR MESSAGES - CONTINUED

### G-4.2 Operation Mode Reconfiguration Advice Messages.

1 HYD FLUID HOT: SHUTDOWN PUMP, MANUAL OPS

TURN OFF HYDRAULIC POWER
USE MANUAL OPERATIONS
NOTIFY UNIT MAINTENANCE

CONTINUE NORMAL OPERATIONS WHEN:
HYD FLUID TEMPERATURE BACK TO NORMAL
MESSAGE IS RECEIVED

2 HYD FLUID PRESSURE LOW: USE HAND RAM

PRESSURE DROPS BELOW 300 PSI DURING
TRAVERSE (OR CAB AND GUN TUBE MOTION)

IF NECESSARY:
MANUALLY TRAVERSE AND ELEVATE
NOTIFY UNIT MAINTENANCE

3 LOW HYDRAULIC FLUID LEVEL DETECTED

HYDRAULIC POWER IS OUT
CHECK HYDRAULIC FLUID LEVEL

IF LEVEL OK:
USE MANUAL OPERATIONS
NOTIFY UNIT MAINTENANCE

4 PDIU MEASUREMENTS OUT: MANUAL MONITORING
REQUIRED

PDIU MONITORING AND TESTING IS OUT

CONTINUE NORMAL OPERATIONS
NOTIFY UNIT MAINTENANCE ASAP

5 ABNORMAL POWERDOWN DETECTED
VERIFY DATA BASE

DATA MAY NOT HAVE BEEN STORED:
GET MUZZLE VELOCITY, MOVE ORDER
VERIFY EFC, AMMO, SIGHT DATA, POSITION
VERIFY ALL * ITEMS IN INITIALIZATION

REENTER DATA AS REQUIRED
CONTINUE NORMAL OPERATIONS

## G-4 WARNING/ADVISOR MESSAGES - CONTINUED

### G-4.2 Operation Mode Reconfiguration Advice Messages - Continued

6 PDIU FLOWMETER OUT: MONITOR
PRESSURE GAGE

PDIU MONITORING AND TESTING IS DEGRADED

CONTINUE NORMAL OPERATIONS
NOTIFY UNIT MAINTENANCE ASAP

7 PDIU PRESSURE TRANSDUCER OUT: MONITOR
PRESSURE GAGE

PDIU MONITORING AND TESTING IS DEGRADED

CONTINUE NORMAL OPERATIONS
NOTIFY UNIT MAINTENANCE ASAP

8 PDIU TEMPERATURE SENSOR OUT:

PDIU MONITORING AND TESTING IS DEGRADED

CONTINUE NORMAL OPERATIONS BUT
SHUTDOWN HYDRAULIC POWER WHEN NOT IN USE
NOTIFY UNIT MAINTENANCE ASAP

9 HYD FLUID HOT: ENSURE COOLING FAN IS ON

CONTINUE NORMAL OPERATIONS

BE PREPARED TO TURN OFF HYDRAULIC POWER IF
HYD FLUID HOT: SHUTDOWN PUMP, MANUAL OPS
MESSAGE IS RECEIVED

10 CLOGGED HYD FILTER DETECTED: MONITOR
PRESSURE GAGE

CONTINUE NORMAL OPERATIONS IF POSSIBLE
NOTIFY UNIT MAINTENANCE

11 HYD POWERPACK DEGRADED: USE HAND RAM

IF NECESSARY
MANUALLY TRAVERSE AND ELEVATE
NOTIFY UNIT MAINTENANCE

12 EQUILIBRATION ERROR DETECTED

CONTINUE NORMAL OPERATIONS

RUN PDIU SYSTEM TEST TO:
CHECK AND ADJUST EQUILIBRATION ASAP

## G-4 WARNING/ADVISOR MESSAGES - CONTINUED

### G-4.3 Diagnostic Mode Reconfiguration Advice Messages.

1a DIGITAL COMMO IS OUT

ATTEMPT VOICE COMMO W/HANDSET.
IF NO VERIFY SIDETONE/SIG INDICATOR.
IF NO SWITCH HANDSET - RETRY.
IF NO VERIFY POWER - -RETRY.
SEE TM 11-5820-890-10-2 TO
TROUBLESHOOT RADIO AND RETRY
IF NO SIDETONE OR SIG INDICATOR
NOTIFY UNIT MAINT.

1b SIDETONE PRESENT. SEE OPERATOR'S GUIDE
VERIFY FREQ/KY MODE CORRECT - RETRY.
IF NO SWITCH TO SC IF IN FH - RETRY. IF NO
SWITCH TO HI POWER - RETRY. CHECK CABLES
SECURE AND NO BREAKS. IF BREAKS SWITCH -
RETRY. CHECK ANTENNA ARE SECURE, CLEAN
CONTACTS ON ANTENNA AND CABLES - RETRY.
IF NO MOVE TO HIGHER GROUND - RETRY.
IF NO NOTIFY UNIT MAINT.
CONTINUE MISSION WITH VOICE.

1c VERIFY NET ACCESS AND ADDRESS DATA ENTRY
CORRECT AND RETRY. VERIFY ACU/RADIO CABLE
SECURE. SWITCH TO HI POWER AND RETRY.
IF NO RELOCATE TO HIGHER GROUND - RETRY.
IF NO CONTINUE MISSION WITH VOICE.
NOTIFY UNIT MAINT.

2 COS CONTROL HANDLE IS DEGRADED/OUT

POSITION WEAPON WITH AFCS OR
USE GUNNER CONTROL HANDLE

3 GUNNER CONTROL HANDLE IS DEGRADED/OUT

POSITION WEAPON WITH AFCS OR
USE CHIEF OF SECTION CONTROL HANDLE

4 NAVIGATION SUBSYSTEM IS OUT
NOTIFY UNIT MAINT

NAVIGATE ON YOUR OWN
VERIFY POSITION
USE ALTERNATE METHOD OF LAY
ENTER BASE AZ USING SECTOR OF FIRE MENU
ENTER POSN DATA USING MANUAL MOVE ORDER
PRESS ARRIVED SOFTKEY

# G-4 WARNING/ADVISOR MESSAGES - CONTINUED

## G-4.3 Diagnostic Mode Reconfiguration Advice Messages - Continued

5 VEHICLE MOTION SENSOR IS OUT
NOTIFY UNIT MAINT

NAVIGATE NORMALLY

STOP VEHICLE WHEN:
ZUPT REQUIRED MESSAGE RECEIVED

MOVE VEHICLE WHEN:
ZUPT NO LONGER REQUIRED MESSAGE RECEIVED

6 WC IS OUT
NOTIFY UNIT MAINT

SEND POSITION DATA (PIECE STATUS) TO BCS
BCS MUST COMPUTE FIRING DATA

POSITION WEAPON WITH:
HYDRAULIC POWER TRAVERSE AND ELEVATE
OR MANUAL MODE

7 HYDRAULIC POWER IS OUT

USE MANUAL OPERATIONS

8 AFCS WEAPON CONTROL IS OUT
NOTIFY UNIT MAINT

POSITION WEAPON WITH:
HYDRAULIC POWER TRAVERSE AND ELEVATE
OR MANUAL MODE

9 HYDRAULIC FLUID COOLING SYSTEM IS OUT
SHUTDOWN HYDRAULIC POWER WHEN NOT IN USE

IF MESSAGE:
HYD FLUID HOT: SHUTDOWN PUMP, MANUAL OPS
IS RECEIVED THEN:
SHUTDOWN HYDRAULIC POWER
USE MANUAL OPERATIONS

CONTINUE NORMAL OPERATION WHEN:
HYD FLUID TEMPERATURE BACK TO NORMAL
MESSAGE IS RECEIVED

# APPENDIX G.1

# PDI WARNING MESSAGES AND RECONFIGURATION ADVISOR

## G.1-1 SCOPE.

This appendix contains a list of PDI warning messages and the associated reconfiguration advisories. Following these advisories will give the best chance of continuing the mission.

## G.1-2 GENERAL.

When the PDFCS is in Normal Operation mode, and the hydraulic system is operational, a system warning issued by the PDI will display a system warning alert as “W” in field (4) of the display. Also, if the warning is high priority, a HIGH PRIORITY URGENT message will be displayed in field (15), and an “ACK” label will appear in field (16).

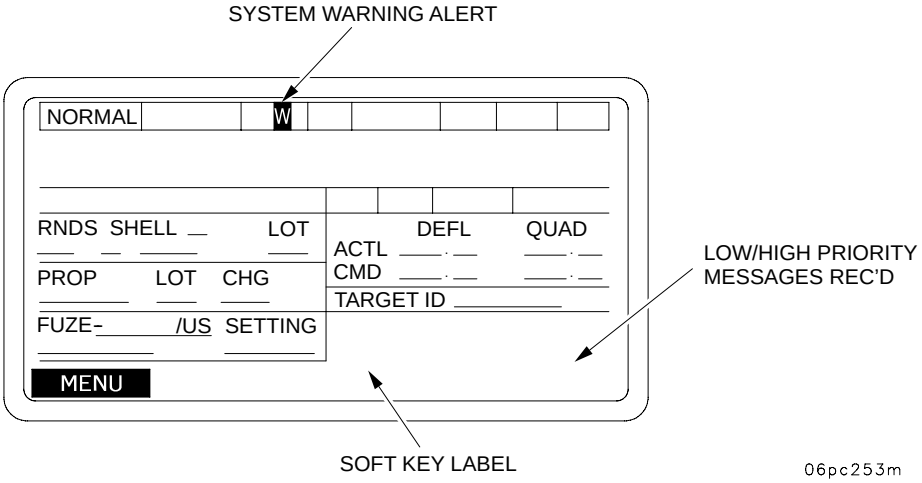


## G.1-3 ACCESSING WARNING MESSAGES.

a. When mission time allows, the warning message text can be accessed from the NORMAL operation menu by pressing the MENU soft key. This will display a SETUP AND INFORMATION menu.

## G.1-3 ACCESSING WARNING MESSAGE - CONTINUED

b. To display the warning message menu, select WARNING MSG and press SELECT soft key.

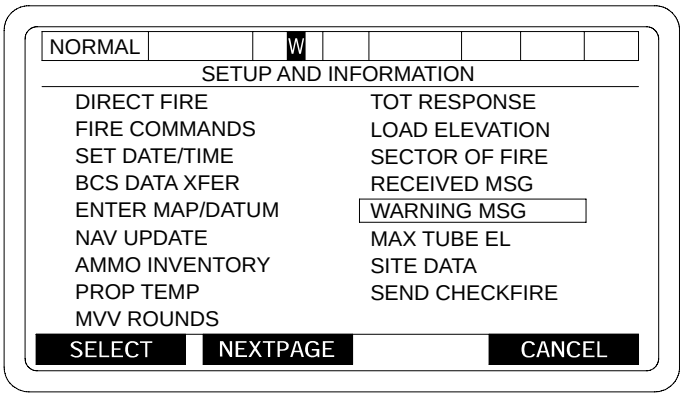


06pc254m

The warning message text will be displayed in area (4) of the screen.

c. If there is more than one message in the queue, a NEXT MSG label will appear over the first soft key. Press this key to display the next message.

d. If there is more than one page to a message, a NEXT PAGE label will appear over the second soft key. Press this key to display the next page of the message.

e. To delete the message being displayed, press the DELETE soft key.

f. To return the SETUP AND INFORMATION menu, press the CANCEL soft key.

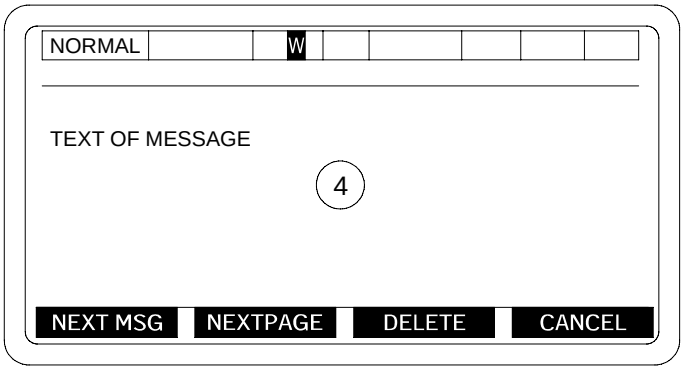


06pc255m

g. The following paragraph contains a listing of the warning/advisor messages.

## G.1-4 WARNING/ADVISOR MESSAGES

### G.1-4.1 Operation Mode Warning Messages.

1 HYD FLUID HOT: SHUTDOWN PUMP, MANUAL OPS
NOTIFY UNIT MAINT

2 HYD FLUID PRESSURE LOW: USE HAND RAM
NOTIFY UNIT MAINT

3 LOW HYDRAULIC FLUID LEVEL DETECTED
CHECK FLUID LEVEL

4 PDI MEASUREMENTS OUT: MANUAL MONITORING
REQUIRED

5 ABNORMAL POWERDOWN DETECTED
VERIFY DATA BASE

6 PDI FLOWMETER OUT: MONITOR
PRESSURE GAGE

7 PDI PRESSURE TRANSDUCER OUT: MONITOR
PRESSURE GAGE

8 PDI TEMPERATURE SENSOR OUT

9 HYD FLUID HOT: ENSURE COOLING FAN IS ON

10 CLOGGED HYD FILTER DETECTED: MONITOR
PRESSURE GAGE

11 HYD POWERPACK DEGRADED: USE HAND RAM
NOTIFY UNIT MAINT

12 EQUILIBRATION ERROR DETECTED

13 HYD FLUID TEMPERATURE BACK TO NORMAL
RESUME NORMAL OPS

14 MINOR PDI TEMPERATURE SYSTEM ERROR

## G.1-4 WARNING/ADVISOR MESSAGES - CONTINUED

### G.1-4.2 Operation Mode Reconfiguration Advice Messages.

1 HYD FLUID HOT: SHUTDOWN PUMP, MANUAL OPS

TURN OFF HYDRAULIC POWER
USE MANUAL OPERATIONS
NOTIFY UNIT MAINTENANCE

CONTINUE NORMAL OPERATIONS WHEN:
HYD FLUID TEMPERATURE BACK TO NORMAL
MESSAGE IS RECEIVED

2 HYD FLUID PRESSURE LOW: USE HAND RAM

PRESSURE DROPS BELOW 300 PSI DURING
TRAVERSE (OR CAB AND GUN TUBE MOTION)

IF NECESSARY:
MANUALLY TRAVERSE AND ELEVATE
NOTIFY UNIT MAINTENANCE

3 LOW HYDRAULIC FLUID LEVEL DETECTED

HYDRAULIC POWER IS OUT
CHECK HYDRAULIC FLUID LEVEL

IF LEVEL OK:
USE MANUAL OPERATIONS
NOTIFY UNIT MAINTENANCE

4 PDI MEASUREMENTS OUT: MANUAL MONITORING
REQUIRED

PDI MONITORING AND TESTING IS OUT

CONTINUE NORMAL OPERATIONS
NOTIFY UNIT MAINTENANCE ASAP

5 ABNORMAL POWERDOWN DETECTED
VERIFY DATA BASE

DATA MAY NOT HAVE BEEN STORED:
GET MUZZLE VELOCITY, MOVE ORDER
VERIFY EFC, AMMO, SIGHT DATA, POSITION
VERIFY ALL * ITEMS IN INITIALIZATION

REENTER DATA AS REQUIRED
CONTINUE NORMAL OPERATIONS

## G.1-4 WARNING/ADVISOR MESSAGES - CONTINUED

### G.1-4.2 Operation Mode Reconfiguration Advice Messages - Continued

6 PDI FLOWMETER OUT: MONITOR
PRESSURE GAGE

PDI MONITORING AND TESTING IS DEGRADED

CONTINUE NORMAL OPERATIONS
NOTIFY UNIT MAINTENANCE ASAP

7 PDI PRESSURE TRANSDUCER OUT: MONITOR
PRESSURE GAGE

PDI MONITORING AND TESTING IS DEGRADED

CONTINUE NORMAL OPERATIONS
NOTIFY UNIT MAINTENANCE ASAP

8 PDI TEMPERATURE SENSOR OUT:

PDI MONITORING AND TESTING IS DEGRADED

CONTINUE NORMAL OPERATIONS BUT
SHUTDOWN HYDRAULIC POWER WHEN NOT IN USE
NOTIFY UNIT MAINTENANCE ASAP

9 HYD FLUID HOT: ENSURE COOLING FAN IS ON

CONTINUE NORMAL OPERATIONS

BE PREPARED TO TURN OFF HYDRAULIC POWER IF
HYD FLUID HOT: SHUTDOWN PUMP, MANUAL OPS
MESSAGE IS RECEIVED

10 CLOGGED HYD FILTER DETECTED: MONITOR
PRESSURE GAGE

CONTINUE NORMAL OPERATIONS IF POSSIBLE
NOTIFY UNIT MAINTENANCE

11 HYD POWERPACK DEGRADED: USE HAND RAM

IF NECESSARY
MANUALLY TRAVERSE AND ELEVATE
NOTIFY UNIT MAINTENANCE

12 EQUILIBRATION ERROR DETECTED

CONTINUE NORMAL OPERATIONS

RUN PDI SYSTEM TEST TO:
CHECK AND ADJUST EQUILIBRATION ASAP

## G.1-4 WARNING/ADVISOR MESSAGES - CONTINUED

### G.1-4.3 Diagnostic Mode Reconfiguration Advice Messages.

1a DIGITAL COMMO IS OUT
ATTEMPT VOICE COMMO W/HANDSET.
IF NO VERIFY SIDETONE/SIG INDICATOR.
IF NO SWITCH HANDSET - RETRY.
IF NO VERIFY POWER - -RETRY.
SEE TM 11-5820-890-10-2 TO
TROUBLESHOOT RADIO AND RETRY
IF NO SIDETONE OR SIG INDICATOR
NOTIFY UNIT MAINT.

1b SIDETONE PRESENT. SEE OPERATOR'S GUIDE
VERIFY FREQ/KY MODE CORRECT - RETRY.
IF NO SWITCH TO SC IF IN FH - RETRY. IF NO
SWITCH TO HI POWER - RETRY. CHECK CABLES
SECURE AND NO BREAKS. IF BREAKS SWITCH -
RETRY. CHECK ANTENNA ARE SECURE, CLEAN
CONTACTS ON ANTENNA AND CABLES - RETRY.
IF NO MOVE TO HIGHER GROUND - RETRY.
IF NO NOTIFY UNIT MAINT.
CONTINUE MISSION WITH VOICE.

1c VERIFY NET ACCESS AND ADDRESS DATA ENTRY
CORRECT AND RETRY. VERIFY PDI/RADIO CABLE
SECURE. SWITCH TO HI POWER AND RETRY.
IF NO RELOCATE TO HIGHER GROUND - RETRY.
IF NO CONTINUE MISSION WITH VOICE.
NOTIFY UNIT MAINT.

2 COS CONTROL HANDLE IS DEGRADED/OUT
POSITION WEAPON WITH PDFCS OR
USE GUNNER CONTROL HANDLE

3 GUNNER CONTROL HANDLE IS DEGRADED/OUT
POSITION WEAPON WITH PDFCS OR
USE CHIEF OF SECTION CONTROL HANDLE

4 NAVIGATION SUBSYSTEM IS OUT
NOTIFY UNIT MAINT

NAVIGATE ON YOUR OWN
VERIFY POSITION
USE ALTERNATE METHOD OF LAY
ENTER BASE AZ USING SECTOR OF FIRE MENU
ENTER POSN DATA USING MANUAL MOVE ORDER
PRESS ARRIVED SOFTKEY

## G.1-4 WARNING/ADVISOR MESSAGES - CONTINUED

### G.1-4.3 Diagnostic Mode Reconfiguration Advice Messages - Continued

5 VEHICLE MOTION SENSOR IS OUT
NOTIFY UNIT MAINT

NAVIGATE NORMALLY

STOP VEHICLE WHEN:
ZUPT REQUIRED MESSAGE RECEIVED

MOVE VEHICLE WHEN:
ZUPT NO LONGER REQUIRED MESSAGE RECEIVED

6 WC IS OUT
NOTIFY UNIT MAINT

SEND POSITION DATA (PIECE STATUS) TO BCS
BCS MUST COMPUTE FIRING DATA

POSITION WEAPON WITH:
HYDRAULIC POWER TRAVERSE AND ELEVATE
OR MANUAL MODE

7 HYDRAULIC POWER IS OUT

USE MANUAL OPERATIONS

8 PDFCS WEAPON CONTROL IS OUT
NOTIFY UNIT MAINT

POSITION WEAPON WITH:
HYDRAULIC POWER TRAVERSE AND ELEVATE
OR MANUAL MODE

9 HYDRAULIC FLUID COOLING SYSTEM IS OUT
SHUTDOWN HYDRAULIC POWER WHEN NOT IN USE

IF MESSAGE:
HYD FLUID HOT: SHUTDOWN PUMP, MANUAL OPS
IS RECEIVED THEN:
SHUTDOWN HYDRAULIC POWER
USE MANUAL OPERATIONS

CONTINUE NORMAL OPERATION WHEN:
HYD FLUID TEMPERATURE BACK TO NORMAL
MESSAGE IS RECEIVED

# APPENDIX G.2

# PDIU WARNING MESSAGES AND RECONFIGURATION ADVISOR (VERSION 7 SOFTWARE)

## G.2-1 SCOPE.

This appendix contains a list of PDIU warning messages and the associated reconfiguration advisories. Following these advisories will give the best chance of continuing the mission.

## G.2-2 GENERAL.

When the AFCS is in Normal Operation mode, and the hydraulic system is operational, a system warning issued by the PDIU will display a system warning alert as “W” in field (4) of the display. Also, if the warning is high priority, a HIGH PRIORITY URGENT message will be displayed in field (15), and a “ACK” label will appear in field (16).

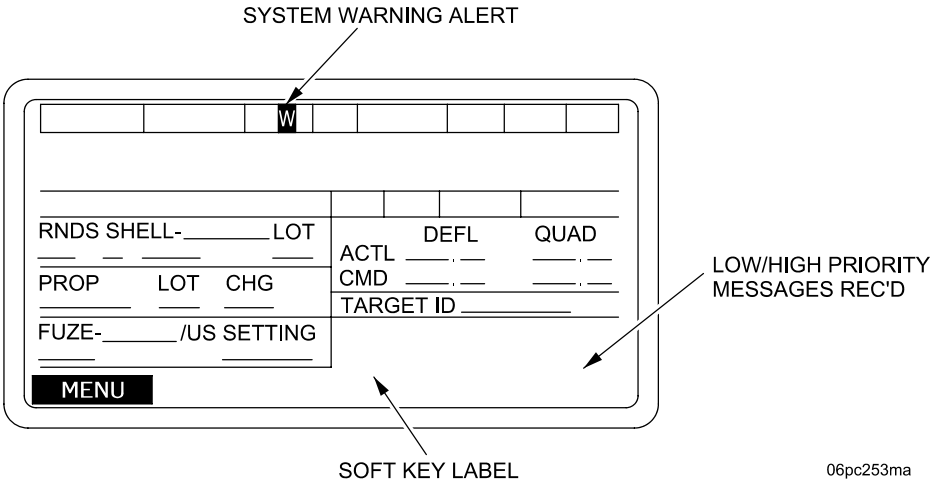


## G.2-3 ACCESSING WARNING MESSAGES.

a. When mission time allows, the warning message text can be accessed from the NORMAL operation menu by pressing the MENU soft key. This will display a SETUP AND INFORMATION menu.

## G.2-3 ACCESSING WARNING MESSAGE - CONTINUED

b. To display the warning message menu, select WARNING MSG and press SELECT soft key.

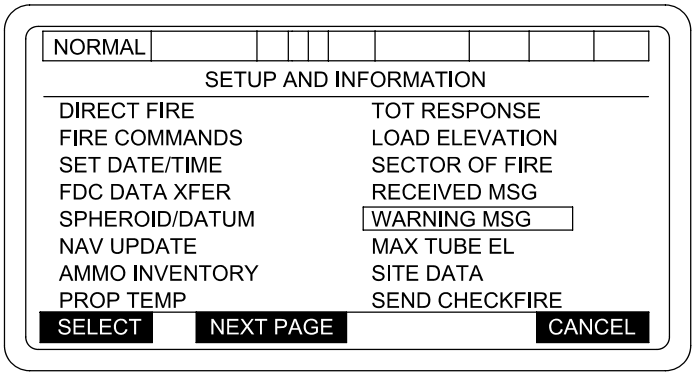


06pc260ta

The warning message text will be displayed in area (4) of the screen.

c. If there is more than one message in the queue, a NEXT MSG label will appear over the first soft key. Press this key to display the next message.

d. If there is more than one page to a message, a NEXT PAGE label will appear over the second soft key. Press this key to display the next page of the message.

e. To delete the message being displayed, press the DELETE soft key.

f. To return the SETUP AND INFORMATION menu, press the CANCEL soft key.

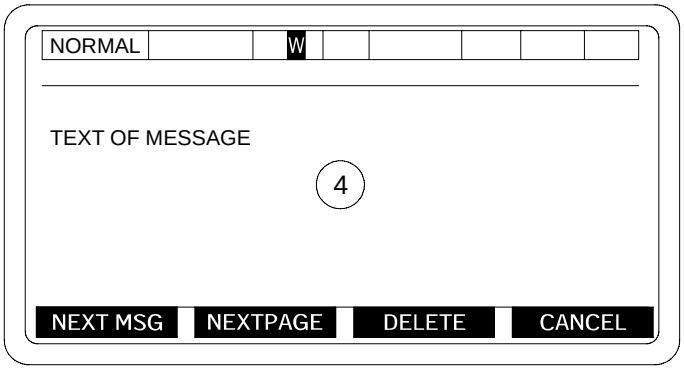


06pc255m

g. The following paragraph contains a listing of the warning/advisor messages.

## G.2-4 WARNING/ADVISOR MESSAGES

### G.2-4.1 Operation Mode Warning Messages.

(1) HYD FLUID HOT: SHUTDOWN PUMP, MANUAL OPS
NOTIFY UNIT MAINT

(2) HYD FLUID PRESSURE LOW: USE HAND RAM
NOTIFY UNIT MAINT

(3) LOW HYDRAULIC FLUID LEVEL DETECTED
CHECK FLUID LEVEL

(4) PDIU MEASUREMENTS OUT: MANUAL MONITORING
REQUIRED

(5) ABNORMAL POWERDOWN DETECTED
VERIFY DATA BASE

(6) PDIU FLOWMETER OUT: MONITOR
PRESSURE GAGE

(7) PDIU PRESSURE TRANSDUCER OUT: MONITOR
PRESSURE GAGE

(8) PDIU TEMPERATURE SENSOR OUT

(9) HYD FLUID HOT: ENSURE COOLING FAN IS ON

(10) CLOGGED HYD FILTER DETECTED: MONITOR
PRESSURE GAGE

(11) HYD POWERPACK DEGRADED: USE HAND RAM
NOTIFY UNIT MAINT

(12) EQUILIBRATION ERROR DETECTED

(13) HYD FLUID TEMPERATURE BACK TO NORMAL
RESUME NORMAL OPS

(14) MINOR PDIU TEMPERATURE SYSTEM ERROR

## G.2-4 WARNING/ADVISOR MESSAGES - CONTINUED

### G.2-4.2 Operation Mode Reconfiguration Advice Messages.

(1) HYD FLUID HOT: SHUTDOWN PUMP, MANUAL OPS

TURN OFF HYDRAULIC POWER
USE MANUAL OPERATIONS
NOTIFY UNIT MAINTENANCE

CONTINUE NORMAL OPERATIONS WHEN:
HYD FLUID TEMPERATURE BACK TO NORMAL
MESSAGE IS RECEIVED

(2) HYD FLUID PRESSURE LOW: USE HAND RAM

PRESSURE DROPS BELOW 300 PSI DURING
TRAVERSE (OR CAB AND GUN TUBE MOTION)

IF NECESSARY:
MANUALLY TRAVERSE AND ELEVATE
NOTIFY UNIT MAINTENANCE

(3) LOW HYDRAULIC FLUID LEVEL DETECTED

HYDRAULIC POWER IS OUT
CHECK HYDRAULIC FLUID LEVEL

IF LEVEL OK:
USE MANUAL OPERATIONS
NOTIFY UNIT MAINTENANCE

(4) PDIU MEASUREMENTS OUT: MANUAL MONITORING
REQUIRED

PDIU MONITORING AND TESTING IS OUT

CONTINUE NORMAL OPERATIONS
NOTIFY UNIT MAINTENANCE ASAP

(5) ABNORMAL POWERDOWN DETECTED
VERIFY DATA BASE

DATA MAY NOT HAVE BEEN STORED:
GET MUZZLE VELOCITY, MOVE ORDER
VERIFY EFC, AMMO, SIGHT DATA, POSITION
VERIFY ALL * ITEMS IN INITIALIZATION

REENTER DATA AS REQUIRED
CONTINUE NORMAL OPERATIONS

## G.2-4 WARNING/ADVISOR MESSAGES - CONTINUED

### G.2-4.2 Operation Mode Reconfiguration Advice Messages - Continued

(6) PDIU FLOWMETER OUT: MONITOR
PRESSURE GAGE

PDIU MONITORING AND TESTING IS DEGRADED

CONTINUE NORMAL OPERATIONS
NOTIFY UNIT MAINTENANCE ASAP

(7) PDIU PRESSURE TRANSDUCER OUT: MONITOR
PRESSURE GAGE

PDIU MONITORING AND TESTING IS DEGRADED

CONTINUE NORMAL OPERATIONS
NOTIFY UNIT MAINTENANCE ASAP

(8) PDIU TEMPERATURE SENSOR OUT:

PDIU MONITORING AND TESTING IS DEGRADED

CONTINUE NORMAL OPERATIONS BUT
SHUTDOWN HYDRAULIC POWER WHEN NOT IN USE
NOTIFY UNIT MAINTENANCE ASAP

(9) HYD FLUID HOT: ENSURE COOLING FAN IS ON

CONTINUE NORMAL OPERATIONS

BE PREPARED TO TURN OFF HYDRAULIC POWER IF
HYD FLUID HOT: SHUTDOWN PUMP, MANUAL OPS
MESSAGE IS RECEIVED

(10) CLOGGED HYD FILTER DETECTED: MONITOR
PRESSURE GAGE

CONTINUE NORMAL OPERATIONS IF POSSIBLE
NOTIFY UNIT MAINTENANCE

(11) HYD POWERPACK DEGRADED: USE HAND RAM

IF NECESSARY
MANUALLY TRAVERSE AND ELEVATE
NOTIFY UNIT MAINTENANCE

(12) EQUILIBRATION ERROR DETECTED

CONTINUE NORMAL OPERATIONS

RUN PDIU SYSTEM TEST TO:
CHECK AND ADJUST EQUILIBRATION ASAP

## G.2-4 WARNING/ADVISOR MESSAGES - CONTINUED

### G.2-4.3 Diagnostic Mode Reconfiguration Advice Messages.

(1) DIGITAL COMMO IS OUT

ATTEMPT VOICE COMMO W/HANDSET.
IF NO VERIFY SIDETONE/SIG INDICATOR.
IF NO SWITCH HANDSET - RETRY.
IF NO VERIFY POWER - -RETRY.
SEE TM 11-5820-890-10-2 TO
TROUBLESHOOT RADIO AND RETRY
IF NO SIDETONE OR SIG INDICATOR
NOTIFY UNIT MAINT.

SIDETONE PRESENT. SEE OPERATOR'S GUIDE
VERIFY FREQ/KY MODE CORRECT - RETRY.
IF NO SWITCH TO SC IF IN FH - RETRY. IF NO
SWITCH TO HI POWER - RETRY. CHECK CABLES
SECURE AND NO BREAKS. IF BREAKS SWITCH -
RETRY. CHECK ANTENNA ARE SECURE, CLEAN
CONTACTS ON ANTENNA AND CABLES - RETRY.
IF NO MOVE TO HIGHER GROUND - RETRY.
IF NO NOTIFY UNIT MAINT.
CONTINUE MISSION WITH VOICE.

VERIFY NETWORK DATA ENTRY
CORRECT AND RETRY. VERIFY ACU/RADIO CABLE
SECURE. SWITCH TO HI POWER AND RETRY.
IF NO RELOCATE TO HIGHER GROUND - RETRY.
IF NO CONTINUE MISSION WITH VOICE.
NOTIFY UNIT MAINT.

(2) COS CONTROL HANDLE IS DEGRADED/OUT

POSITION WEAPON WITH AFCS OR
USE GUNNER CONTROL HANDLE

(3) GUNNER CONTROL HANDLE IS DEGRADED/OUT

POSITION WEAPON WITH AFCS OR
USE CHIEF OF SECTION CONTROL HANDLE

(4) NAVIGATION SUBSYSTEM IS OUT
NOTIFY UNIT MAINT

NAVIGATE ON YOUR OWN
VERIFY POSITION
USE ALTERNATE METHOD OF LAY
ENTER BASE AZ USING SECTOR OF FIRE MENU
ENTER POSN DATA USING MANUAL MOVE ORDER
PRESS ARRIVED SOFTKEY

## G.2-4 WARNING/ADVISOR MESSAGES - CONTINUED

### G.2-4.3 Diagnostic Mode Reconfiguration Advice Messages - Continued

(5) VEHICLE MOTION SENSOR IS OUT
NOTIFY UNIT MAINT

NAVIGATE NORMALLY

STOP VEHICLE WHEN:
ZUPT REQUIRED MESSAGE RECEIVED

MOVE VEHICLE WHEN:
ZUPT NO LONGER REQUIRED MESSAGE RECEIVED

(6) WC IS OUT
NOTIFY UNIT MAINT

SEND POSITION DATA (PIECE STATUS) TO BCS
BCS MUST COMPUTE FIRING DATA

POSITION WEAPON WITH:
HYDRAULIC POWER TRAVERSE AND ELEVATE
OR MANUAL MODE

(7) HYDRAULIC POWER IS OUT

USE MANUAL OPERATIONS

(8) AFCS WEAPON CONTROL IS OUT
NOTIFY UNIT MAINT

POSITION WEAPON WITH:
HYDRAULIC POWER TRAVERSE AND ELEVATE
OR MANUAL MODE

(9) HYDRAULIC FLUID COOLING SYSTEM IS OUT
SHUTDOWN HYDRAULIC POWER WHEN NOT IN USE

IF MESSAGE:
HYD FLUID HOT: SHUTDOWN PUMP, MANUAL OPS
IS RECEIVED THEN:
SHUTDOWN HYDRAULIC POWER
USE MANUAL OPERATIONS

CONTINUE NORMAL OPERATION WHEN:
HYD FLUID TEMPERATURE BACK TO NORMAL
MESSAGE IS RECEIVED

# APPENDIX G.3

# PDI WARNING MESSAGES AND RECONFIGURATION ADVISOR (VERSION 7P SOFTWARE)

## G.3-1 SCOPE.

This appendix contains a list of PDI warning messages and the associated reconfiguration advisories. Following these advisories will give the best chance of continuing the mission.

## G.3-2 GENERAL.

When the PDFCS is in Normal Operation mode, and the hydraulic system is operational, a system warning issued by the PDI will display a system warning alert as “W” in field (4) of the display. Also, if the warning is high priority, a HIGH PRIORITY URGENT message will be displayed in field (15), and an “ACK” label will appear in field (16).

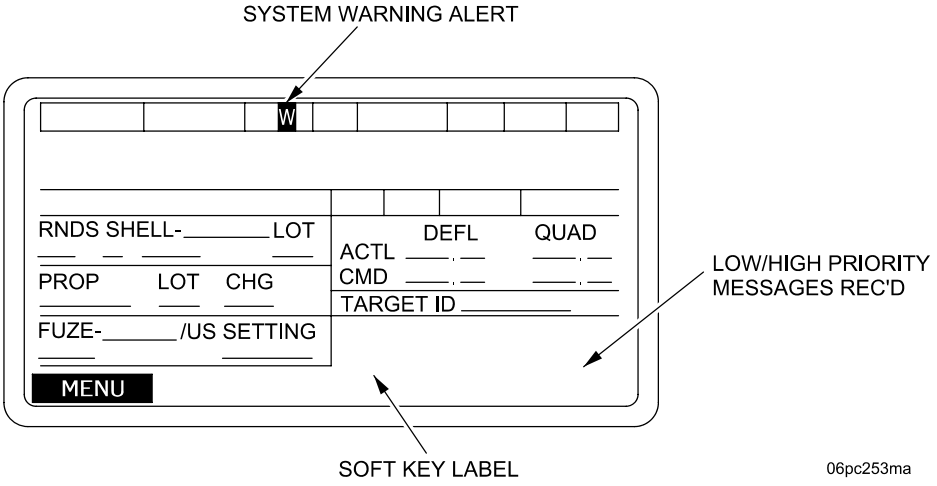


## G.3-3 ACCESSING WARNING MESSAGES.

a. When mission time allows, the warning message text can be accessed from the NORMAL operation menu by pressing the MENU soft key. This will display a SETUP AND INFORMATION menu.

## G.3-3 ACCESSING WARNING MESSAGE - CONTINUED

b. To display the warning message menu, select WARNING MSG and press SELECT soft key.

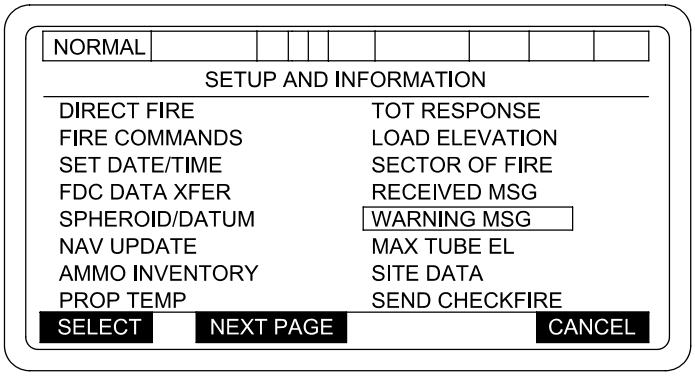


06pc260ta

The warning message text will be displayed in area (4) of the screen.

c. If there is more than one message in the queue, a NEXT MSG label will appear over the first soft key. Press this key to display the next message.

d. If there is more than one page to a message, a NEXT PAGE label will appear over the second soft key. Press this key to display the next page of the message.

e. To delete the message being displayed, press the DELETE soft key.

f. To return the SETUP AND INFORMATION menu, press the CANCEL soft key.

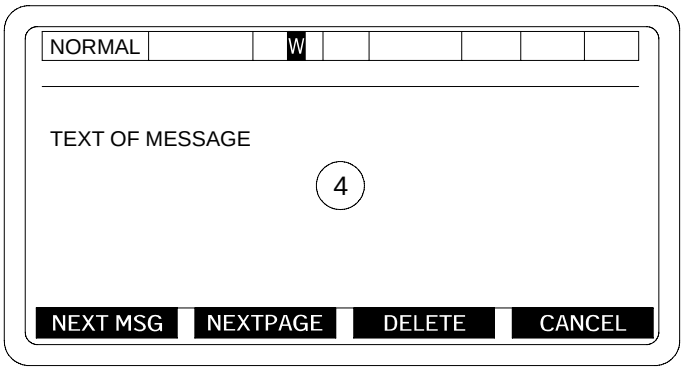


06pc255m

g. The following paragraph contains a listing of the warning/advisor messages.

## G.3-4 WARNING/ADVISOR MESSAGES

### G.3-4.1 Operation Mode Warning Messages.

(1) HYD FLUID HOT: SHUTDOWN PUMP, MANUAL OPS
NOTIFY UNIT MAINT

(2) HYD FLUID PRESSURE LOW: USE HAND RAM
NOTIFY UNIT MAINT

(3) LOW HYDRAULIC FLUID LEVEL DETECTED
CHECK FLUID LEVEL

(4) PDI MEASUREMENTS OUT: MANUAL MONITORING
REQUIRED

(5) ABNORMAL POWERDOWN DETECTED
VERIFY DATA BASE

(6) PDI FLOWMETER OUT: MONITOR
PRESSURE GAGE

(7) PDI PRESSURE TRANSDUCER OUT: MONITOR
PRESSURE GAGE

(8) PDI TEMPERATURE SENSOR OUT

(9) HYD FLUID HOT: ENSURE COOLING FAN IS ON

(10) CLOGGED HYD FILTER DETECTED: MONITOR
PRESSURE GAGE

(11) HYD POWERPACK DEGRADED: USE HAND RAM
NOTIFY UNIT MAINT

(12) EQUILIBRATION ERROR DETECTED

(13) HYD FLUID TEMPERATURE BACK TO NORMAL
RESUME NORMAL OPS

(14) MINOR PDI TEMPERATURE SYSTEM ERROR

## G.3-4 WARNING/ADVISOR MESSAGES - CONTINUED

### G.3-4.2 Operation Mode Reconfiguration Advice Messages.

(1) HYD FLUID HOT: SHUTDOWN PUMP, MANUAL OPS

TURN OFF HYDRAULIC POWER
USE MANUAL OPERATIONS
NOTIFY UNIT MAINTENANCE

CONTINUE NORMAL OPERATIONS WHEN:
HYD FLUID TEMPERATURE BACK TO NORMAL
MESSAGE IS RECEIVED

(2) HYD FLUID PRESSURE LOW: USE HAND RAM

PRESSURE DROPS BELOW 300 PSI DURING
TRAVERSE (OR CAB AND GUN TUBE MOTION)

IF NECESSARY:
MANUALLY TRAVERSE AND ELEVATE
NOTIFY UNIT MAINTENANCE

(3) LOW HYDRAULIC FLUID LEVEL DETECTED

HYDRAULIC POWER IS OUT
CHECK HYDRAULIC FLUID LEVEL

IF LEVEL OK:
USE MANUAL OPERATIONS
NOTIFY UNIT MAINTENANCE

(4) PDI MEASUREMENTS OUT: MANUAL MONITORING
REQUIRED

PDI MONITORING AND TESTING IS OUT

CONTINUE NORMAL OPERATIONS
NOTIFY UNIT MAINTENANCE ASAP

(5) ABNORMAL POWERDOWN DETECTED
VERIFY DATA BASE

DATA MAY NOT HAVE BEEN STORED:
GET MUZZLE VELOCITY, MOVE ORDER
VERIFY EFC, AMMO, SIGHT DATA, POSITION
VERIFY ALL * ITEMS IN INITIALIZATION

REENTER DATA AS REQUIRED
CONTINUE NORMAL OPERATIONS

## G.3-4 WARNING/ADVISOR MESSAGES - CONTINUED

### G.3-4.2 Operation Mode Reconfiguration Advice Messages - Continued

(6) PDI FLOWMETER OUT: MONITOR
PRESSURE GAGE

PDI MONITORING AND TESTING IS DEGRADED

CONTINUE NORMAL OPERATIONS
NOTIFY UNIT MAINTENANCE ASAP

(7) PDI PRESSURE TRANSDUCER OUT: MONITOR
PRESSURE GAGE

PDI MONITORING AND TESTING IS DEGRADED

CONTINUE NORMAL OPERATIONS
NOTIFY UNIT MAINTENANCE ASAP

(8) PDI TEMPERATURE SENSOR OUT:

PDI MONITORING AND TESTING IS DEGRADED

CONTINUE NORMAL OPERATIONS BUT
SHUTDOWN HYDRAULIC POWER WHEN NOT IN USE
NOTIFY UNIT MAINTENANCE ASAP

(9) HYD FLUID HOT: ENSURE COOLING FAN IS ON

CONTINUE NORMAL OPERATIONS

BE PREPARED TO TURN OFF HYDRAULIC POWER IF
HYD FLUID HOT: SHUTDOWN PUMP, MANUAL OPS
MESSAGE IS RECEIVED

(10) CLOGGED HYD FILTER DETECTED: MONITOR
PRESSURE GAGE

CONTINUE NORMAL OPERATIONS IF POSSIBLE
NOTIFY UNIT MAINTENANCE

(11) HYD POWERPACK DEGRADED: USE HAND RAM

IF NECESSARY
MANUALLY TRAVERSE AND ELEVATE
NOTIFY UNIT MAINTENANCE

(12) EQUILIBRATION ERROR DETECTED

CONTINUE NORMAL OPERATIONS

RUN PDI SYSTEM TEST TO:
CHECK AND ADJUST EQUILIBRATION ASAP

## G.3-4 WARNING/ADVISOR MESSAGES - CONTINUED

### G.3-4.3 Diagnostic Mode Reconfiguration Advice Messages.

(1) DIGITAL COMMO IS OUT
ATTEMPT VOICE COMMO W/HANDSET.
IF NO VERIFY SIDETONE/SIG INDICATOR.
IF NO SWITCH HANDSET - RETRY.
IF NO VERIFY POWER - -RETRY.
SEE TM 11-5820-890-10-2 TO
TROUBLESHOOT RADIO AND RETRY
IF NO SIDETONE OR SIG INDICATOR
NOTIFY UNIT MAINT.

SIDETONE PRESENT. SEE OPERATOR'S GUIDE
VERIFY FREQ/KY MODE CORRECT - RETRY.
IF NO SWITCH TO SC IF IN FH - RETRY. IF NO
SWITCH TO HI POWER - RETRY. CHECK CABLES
SECURE AND NO BREAKS. IF BREAKS SWITCH -
RETRY. CHECK ANTENNA ARE SECURE, CLEAN
CONTACTS ON ANTENNA AND CABLES - RETRY.
IF NO MOVE TO HIGHER GROUND - RETRY.
IF NO NOTIFY UNIT MAINT.
CONTINUE MISSION WITH VOICE.

VERIFY NETWORK DATA ENTRY
CORRECT AND RETRY. VERIFY PDI/RADIO CABLE
SECURE. SWITCH TO HI POWER AND RETRY.
IF NO RELOCATE TO HIGHER GROUND - RETRY.
IF NO CONTINUE MISSION WITH VOICE.
NOTIFY UNIT MAINT.

(2) COS CONTROL HANDLE IS DEGRADED/OUT
POSITION WEAPON WITH PDFCS OR
USE GUNNER CONTROL HANDLE

(3) GUNNER CONTROL HANDLE IS DEGRADED/OUT
POSITION WEAPON WITH PDFCS OR
USE CHIEF OF SECTION CONTROL HANDLE

(4) NAVIGATION SUBSYSTEM IS OUT
NOTIFY UNIT MAINT

NAVIGATE ON YOUR OWN
VERIFY POSITION
USE ALTERNATE METHOD OF LAY
ENTER BASE AZ USING SECTOR OF FIRE MENU
ENTER POSN DATA USING MANUAL MOVE ORDER
PRESS ARRIVED SOFTKEY

## G.3-4 WARNING/ADVISOR MESSAGES - CONTINUED

### G.3-4.3 Diagnostic Mode Reconfiguration Advice Messages - Continued

(5) VEHICLE MOTION SENSOR IS OUT
NOTIFY UNIT MAINT

NAVIGATE NORMALLY

STOP VEHICLE WHEN:
ZUPT REQUIRED MESSAGE RECEIVED

MOVE VEHICLE WHEN:
ZUPT NO LONGER REQUIRED MESSAGE RECEIVED

(6) WC IS OUT
NOTIFY UNIT MAINT

SEND POSITION DATA (PIECE STATUS) TO BCS
BCS MUST COMPUTE FIRING DATA

POSITION WEAPON WITH:
HYDRAULIC POWER TRAVERSE AND ELEVATE
OR MANUAL MODE

(7) HYDRAULIC POWER IS OUT

USE MANUAL OPERATIONS

(8) PDFCS WEAPON CONTROL IS OUT
NOTIFY UNIT MAINT

POSITION WEAPON WITH:
HYDRAULIC POWER TRAVERSE AND ELEVATE
OR MANUAL MODE

(9) HYDRAULIC FLUID COOLING SYSTEM IS OUT
SHUTDOWN HYDRAULIC POWER WHEN NOT IN USE

IF MESSAGE:
HYD FLUID HOT: SHUTDOWN PUMP, MANUAL OPS
IS RECEIVED THEN:
SHUTDOWN HYDRAULIC POWER
USE MANUAL OPERATIONS

CONTINUE NORMAL OPERATION WHEN:
HYD FLUID TEMPERATURE BACK TO NORMAL
MESSAGE IS RECEIVED

# APPENDIX G.4

# PDIU/PDI WARNING MESSAGES (VERSION 2 and 2P SOFTWARE)

## G.4-1 SCOPE.

This appendix contains a table of PDIU/PDI warning messages and the associated reconfiguration advisories. Following these advisories will give the best chance of continuing the mission.

## G.4-2 GENERAL.

When the PDFCS is in Normal Operation mode, and the hydraulic system is operational, a system warning issued by the PDIU/PDI will display a system warning alert as “W” in field (4) of the display. Also, if the warning is high priority, a HIGH PRIORITY URGENT message will be displayed in the main display area, and an “ACK” label will appear in function key area.

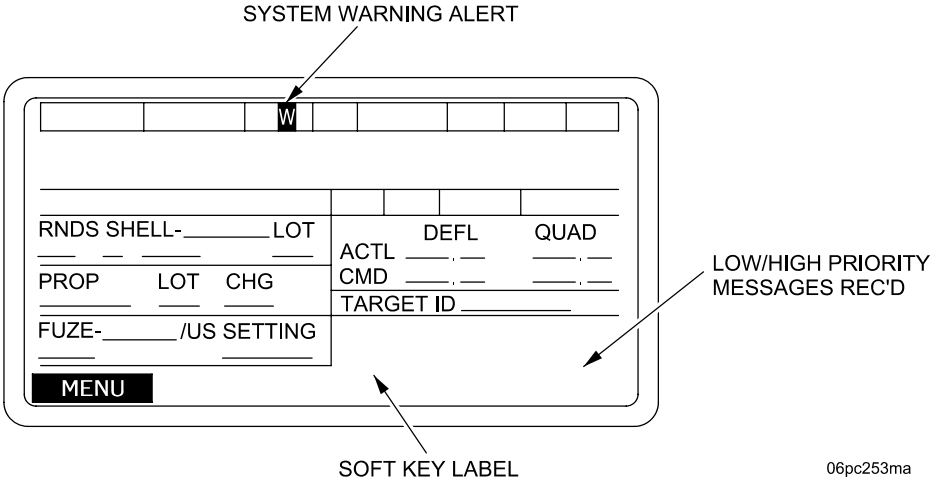


## G.4-3 ACCESSING WARNING MESSAGES.

a. When mission time allows, the warning message text can be accessed from the NORMAL operation menu by pressing the MENU soft key. This will display a SETUP AND INFORMATION menu.

b. To display the warning message menu, select WARNING MSG and press SELECT soft key.

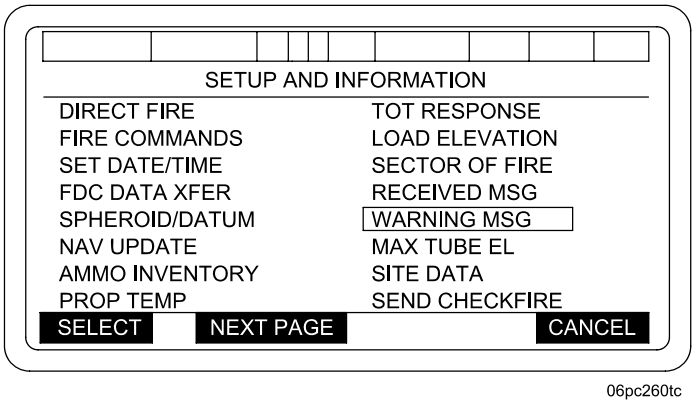

## G.4-3 ACCESSING WARNING MESSAGE - CONTINUED

c. The warning message text will be displayed in area (4) of the screen.

d. If there is more than one message in the queue, a NEXT MSG label will appear over the first soft key. Press this key to display the next message.

e. If there is more than one page to a message, a NEXT PAGE label will appear over the second soft key. Press this key to display the next page of the message.

f. To delete the message being displayed, press the DELETE soft key.

g. To return the SETUP AND INFORMATION menu, press the CANCEL soft key.

### NOTE

- The Paladin will keep three (3) messages in a buffer. If there are more than three unviewed messages, the Paladin will discard the oldest and display the error message “MESSAGES HAVE BEEN LOST” “ACK” to the operator upon entry into the screen.

- The SYSTEM WARNING MESSAGE counter has a range from 0001 to 9999 and will reset on each power-up. If the counter reaches 9999, then the next WARNING MESSAGE number will be reset to 0001.

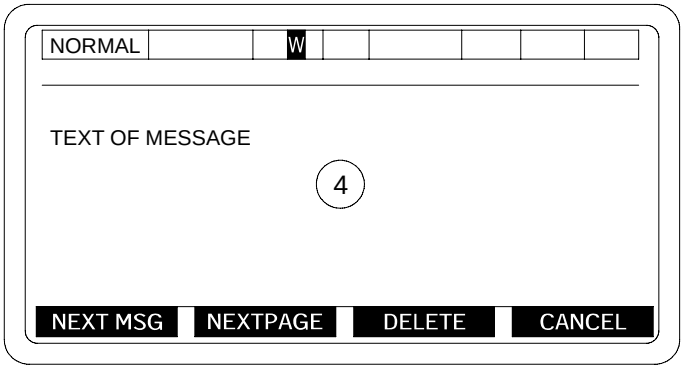


06pc255m

h. The following paragraph contains a listing of the warning/advisor messages.

## G.4-4 WARNING/ADVISOR MESSAGES

### Table G.4-1 System Warning Messages

| Warning Messages | Cause | Reconfiguration Advisory |
|---|---|---|
| MOVE MISSION PENDED ACTIVATION TIME IS YY/MM/DD/HHMM | Move order received for a future time. | The Move Order will activate at the time specified in the message. |
| ANOTHER STATION ON THE NETWORK IS USING YOUR STATION ADDRESS | Two or more stations have the same URN. | Verify station address and re-enter the URN as needed. |
| CAN NOT COMMUNICATE WITH DATA RADIO | The Paladin can not detect the signal from the radio. | Verify the following:<br>(1) Radio cable is connected.<br>(2) Radio is turned on.<br>(3) Radio is configured properly.<br>When all conditions are met, reset the TCIM. |
| ERROR IN GPS CRYPTO KEYS | The GPS receiver doesn't have a valid crypto key loaded. | Load valid crypto keys. |
| NOT ENOUGH CODED GPS DATA | The GPS receiver is receiving fewer than four "Y" coded satellites. | Check to ensure that GPS antenna is not obstructed. If necessary, and when instructed by the POC, set USE CODED GPS DATA to NO (see para 2-15.7.12). |
| GPS MEMORY BATTERY LOW | Low GPS memory battery. | Replace the GPS memory battery as soon as possible. |
| GPS MAIN BATTERY LOW | Low GPS main battery. | Replace the GPS main battery as soon as possible. |
| FAULTS DETECTED IN THE GPS ANTENNA | The GPS receiver reported a fault in the GPS antenna. | Check the GPS Antenna cabling is present and connected. |
| GPS OPERATING ON PRIMARY BATTERY | The Paladin detected a vehicle power feed failure. | Check the power cable. |
| GPS EMERGENCY ZEROIZE PASSED | The Paladin has detected a successful GPS Emergency Zeroize. | No further action required. |
| GPS EMERGENCY ZEROIZE FAILED | The Paladin has detected a failure during the GPS Emergency Zeroize. | If abandoning the vehicle, remove GPS receiver and take with you or destroy GPS receiver. |
| PDIU/PDI PRESSURE TRANSDUCER OUT: MONITOR PRESSURE GAUGE | A problem has occurred in the system's monitoring capability. | Continue normal operations and notify unit maintenance. |
| HYD FLUID HOT: SHUTDOWN PUMP, MANUAL OPS NOTIFY UNIT MAINT | When the Temperature Sensor Test Inhibit status is not set and the hydraulic fluid temperature measures more than 250 degrees F for more than 5 seconds, and the Temperature Shutdown status is not set. | Turn off the hydraulic power and use manual operations. Notify unit maintenance and continue manual operations until the warning message: HYD FLUID TEMPERATURE BACK TO NORMAL RESUME NORMAL OPS message is received. |
| HYD FLUID PRESSURE LOW: USE HAND RAM NOTIFY UNIT MAINT | The PDI/PDIU has determined that the hydraulic fluid pressure is low and normal operations are not possible. | Traverse (or cab and gun tube motion) manually and elevate. Notify unit maintenance. |

## G.4-4 WARNING/ADVISOR MESSAGES - CONTINUED

**Table G.4-1 - System Warning Messages - Continued**

| Warning Messages | Cause | Reconfiguration Advisory |
|---|---|---|
| LOW HYDRAULIC FLUID LEVEL DETECTED CHECK FLUID LEVEL | The PDI/PDIU has determined that the hydraulic fluid level is low. | Hydraulic power is out, check hydraulic fluid level. If level is ok use manual operations and notify unit maintenance. |
| PDIU/PDI MEASUREMENTS OUT: MANUAL MONITORING REQUIRED | A problem has occurred in the system's monitoring capability. | Continue normal operations and notify unit maintenance. |
| ABNORMAL POWERDOWN DETECTED VERIFY DATA BASE | An abnormal powerdown was detected. | Data may not have been stored. Get the muzzle velocity data, EFC data, move order data, ammunition data, sight data, position data and re-enter and continue normal operations. |
| PDIU/PDI FLOWMETER OUT: MONITOR PRESSURE GAUGE | When the hydraulic power is on and the Frequency Measurement Error status is set by the Perform Measurement function (during the flowmeter measurement made in the Background Monitoring Mode Weapon Positioning Monitoring function). | Continue normal operations and notify unit maintenance. |
| PDIU/PDI TEMPERATURE SENSOR OUT | The PDI/PDIU is not able to monitor the hydraulic fluid temperature. | Continue normal operations but shutdown hydraulic power when not in use. Notify unit maintenance. |
| HYD FLUID HOT: ENSURE COOLING FAN IS ON | When the Temperature Sensor Test Inhibit status is not set and the hydraulic fluid temperature measures between 200 and 250 degrees F for more than 5 seconds. | Turn off hydraulic power and shutdown pump. Ensure that the cooling fan remains ON. |
| CLOGGED HYD FILTER DETECTED: MONITOR PRESSURE GAGE | When the Low Temperature Filter Test Inhibit status is not set and the hydraulic filter testpoint measures less than 18 volts for more than 5 seconds. | Continue normal operations and notify unit maintenance. |
| HYD POWER PACK DEGRADED: USE HAND RAM NOTIFY UNIT MAINT | When the voltage at the hydraulic pump motor is greater than 22 volts and the hydraulic fluid pressure is greater than 300 psi and the calculated efficiency is less than 0.3. | Manually traverse and elevate and notify unit maintenance. |
| EQUILIBRATION ERROR DETECTED | The system has detected a problem with equilibration of the hydraulics. | Run PDIU/PDI system test to check and adjust equilibration. |
| HYD FLUID TEMPERATURE BACK TO NORMAL RESUME NORMAL OPS | When the Temperature Sensor Test Inhibit status is not set and the hydraulic fluid temperature measures less than 175 degrees F for more than 5 seconds. | Resume normal operations. |

# APPENDIX H

# CORROSION PREVENTION AND CONTROL (CPC)

## H-1 SCOPE.

This appendix contains crew level CPC information such as types of corrosion problems, treatments, and tools and material available.

While corrosion is typically associated with rusting of metals, it can also include the deterioration of other materials such as rubber and plastic. Unusual cracking, softening, swelling, or breaking of these materials may be a corrosion problem.

It is important that any corrosion problem with this item be reported. This will allow the problem to be corrected, and improvements made to prevent the problem on future items. Reports can be made using Standard Form 368, Quality Deficiency Report. Use of key words such as corrosion, rust, deteriorating, or cracking will assure that the information is identified as a CPC problem.

The form should be submitted to:

Department of the Army
U.S. Army Tank-automotive and Armaments Command
Armament Research, Development and Engineering Center
ATTN: AMSTA-AR-QAW-C
TACOM-ARDEC
1 Rock Island Arsenal
Rock Island, IL 61299-7300

## H-2 GENERAL.

The CPC program is a planned and organized effort to prevent damage to the M109A6 during its operation. This is done by the proper and timely identification, documentation, and implementation of corrective actions. As the first line of defense, the operator will visually check the vehicle for corrosion and identify methods of treatment.

When in doubt about a corrosion condition, report it to unit maintenance.

## H-3 TYPES OF CORROSION PROBLEMS.

a. Corrosion of Painted Surfaces. This type of corrosion occurs primarily on painted steel surfaces. The paint is often cracked and the area may have a reddish brown appearance. The size and location may vary widely from small spots to large areas. It may occur at interfaces of mating parts such as where the suspension mates to the hull or around fasteners such as nuts, bolts, or washers.

b. Corrosion of Unpainted Moving Parts. This type of corrosion occurs on moving parts such as hinges, pins, and catches where the original protective finish was removed through use or exposure to weather. It also has a reddish brown appearance.

c. Stress Corrosion Cracks. Stress corrosion cracking is a form of corrosion that can occur in high strength steel and aluminum. It is found in the form of cracks or seams in areas where no parts are joined.

d. Selective Leaching. This type of corrosion occurs on brass or bronze components found primarily in electrical connectors. This has a spongy type appearance with much of the original metal removed.

## H-4 TREATMENT PROCEDURES.

a. General. Keep the vehicle and individual components clean. Dirt, grease, oil, and debris may conceal a serious problem. Clean components as needed. Use dry-cleaning solvent on all metal surfaces. Use mild soap and water to clean rubber and plastic parts.

Remove existing (old) lubricant with solvent or cleaner if possible. Corrosion or corrosion products should be carefully removed with a soft bristle brush or crocus cloth. Do not use stainless steel brush, steel wool, or sandpaper. Do not disassemble. Use care not to remove paint or protective finishes from other noncorroded parts. Thoroughly clean with solvent or cleaner.

Lubricate equipment in accordance with Appendix I.

Clean batteries in accordance with TM 9-6140-200-14.

b. Painted Surfaces. Components which require paint are to be referred to unit maintenance.

c. Unpainted Surfaces. Clean the bore and breech mechanism in accordance with Chapter 3 and lubricate per Appendix I. Coat other unpainted metal surfaces with oil or grease as appropriate.

d. Stress Corrosion Cracks. The crack should be verified by probing into the metal, and not just checking cracked paint. If cracked, report to unit maintenance.

e. Rubber and Plastic Material. The only repair to deteriorating rubber or plastic is to replace at unit maintenance or higher level maintenance.

## H-5 TOOLS AND MATERIALS.

The following table lists the tools and materials used by the crew in performing CPC on the M109A6.

| ITEM | DESCRIPTION | NSN | U/M |
|---|---|---|---|
| 1. | Brush, Cleaning, Tool and Parts | 7920-00-062-5468 | EA |
| 2. | Cleaner, Lubricant, and Preservative | 9150-01-053-6688 | PT |
| 3. | Cloth, Abrasive Crocus, 50 Sheets | 5350-00-221-0872 | PG |
| 4. | Detergent, General Purpose | 7930-00-282-9699 | GL |
| 5. | Dry-Cleaning Solvent | 6850-00-285-8011 | GL |
| 6. | Grease, Automotive, Artillery | 9150-01-197-7688 | OZ |
| 7. | Kit, Artillery, Cleaning | 1025-01-196-2172 | EA |
| 8. | Lubricating Oil, General | 9150-00-231-2361 | QT |
| 9. | Pail, Utility 14 qt | 7240-00-160-0455 | EA |
| 10. | Oiler, Hand Steel, Pump | 4930-00-262-8868 | EA |
| 11. | Rag, Wiping, 50 lb Bale | 7920-00-205-1711 | LB |
| 12. | Thinner, Aliphatic | 8010-00-181-8079 | CN |

# APPENDIX I
# LUBRICATION INSTRUCTIONS

## I-1 SCOPE.

This appendix lists and prescribes cleaning and lubrication procedures as to locations, intervals, and proper materials for this vehicle.

## I-2 GENERAL.

a. General. Any special lubricating instructions required for special mechanisms or parts are contained in the pertinent section.

b. Service Intervals. Service intervals specified on the lubricating chart are for normal operation and where moderate temperature, humidity and atmospheric conditions prevail. Report unsatisfactory performance of prescribed petroleum fuels, lubricants, or preserving materials, using DA Form 2407, Maintenance Request.

This appendix is divided into lubrication intervals. For example, when performing a daily lube, refer to page I-5 through I-15. If you operate without firing, refer to pages I-16 through I-37. Weekly, Monthly, Quarterly, Semi-Annual, Annual and Irregular interval lubrication instructions are given on pages I-16 through I-37. If you operate with firing, refer to pages I-9 through I-15.

Intervals (on-condition or hard time) and the related man-hour times are based on normal operation.

Lubrication point pictures shown with dash lines (- - - - -) means there are lube points on both sides of vehicle.

Clean parts with SOLVENT, DRY-CLEANING (MIL-PRF-680).

**WARNING**

Dry-cleaning solvent (MIL-PRF-680) is toxic and flammable. To avoid injury, wear protective goggles and gloves and use only in a well-ventilated area. Avoid contact with skin, eyes, and clothes. Do not breathe vapors. Do not use near open flame or excessive heat. Do not smoke when using solvent. Failure to do so could cause SERIOUS INJURY. If you become dizzy while using dry-cleaning solvent, get fresh air immediately, and if necessary, get medical attention. If contact with skin or clothes is made, flush thoroughly with water. If the solvent contacts your eyes, wash them with water immediately and obtain medical aid (FM 4-25.11).

Before you start your lube service, observe the following:

### NEVER

a. Use wrong type lubricant.
b. Use too much lubricant.
c. Use hydraulic fluid (FRH) MIL—H—46170 in the hydraulic systems.

### ALWAYS

a. Clean grease fittings before lubrication.
b. Use this lubrication order as your guide.
c. Check for lubricant and fuel leaks along with daily services.

## I-2 GENERAL - CONTINUED

After water fording, you have to lubricate.

Make sure vehicle is level when checking oil levels: If it isn't, you'll get incorrect readings on dipsticks and sight gages.

### INTERVAL

| | |
|---|---|
| D Daily | Q Quarterly |
| W Weekly | S Semi–Annually |
| M Monthly | A Annually |

| | |
|---|---|
| OE/HDO | Lubricating Oil, ICE, Tactical Service (MIL–PRF–2104) |
| OEA | Lubricating Oil, Internal Combustion Engine, Arctic (MIL–PRF–46167) |

### NOTE

Under emergency conditions only, OHA hydraulic fluid may be used in the hydraulic system.

| | |
|---|---|
| OHT | Hydraulic Fluid, Petroleum Base, Preservative, Hydraulic Equipment (MIL–PRF–6083) |
| OHA | Hydraulic FLuid, Petroleum Base, Aircraft Missile and Ordnance (MIL–H–5606) |

### NOTE

CLP replaces RBC, PL-S, LSA and LAW.

| | |
|---|---|
| CLP | Cleaner, Lubricant, Preservative (MIL–L–63460) |
| SD–2 | Solvent, Dry–Cleaning (MIL–PRF–680) |
| GO | Lubricating Oil, Gear, Multi–Purpose (MIL–PRF–2105) |
| GGP | Grease, General Purpose (MIL–G–23549) |
| GMD | Grease, Molybdenum Disulfide (MIL–G–21164) |
| GIA | Grease, Aircraft and Instrument (MIL–G–23827) |
| CT | Corrosion Preventive Compound (MIL–DTL–81706) |
| GAA | Grease, Automotive and Artillery (MIL–PRF–10924) |

| LUBRICANT/COMPONENT | CAPACITIES | Above +5°F (Above −15°C) | +5°F to −65°F (−15°C to −54°C) | LUBRICANT FOR EXPECTED TEMPERATURE | | | | INTER-VALS |
|---|---|---|---|---|---|---|---|---|
| | | | | Above +15°F (Above −9°C) | +40°F to −15°F (+4°C to −26°C) | +40°F to −65°F (+4°C to −54°C) | | |
| OE/HDO (MIL−PRF−2104) Lubricating Oil, ICE, Tactical<br><br>OEA (MIL−PRF−46167) Lubricating Oil, ICE, Arctic<br><br>Engine & Generator, 650 AMP<br><br>Final Drive | 27 Qts. (25.54 LI) As Req. | OE/HDO-15 /40 (0-1236)<br><br>See NOTE 3 | OEA | OE/HDO-15/40 (0-1236) or OE/HDO-30 (0-238)<br>See NOTE 3 | OE/HDO-15/40 (0-1236) or OE/HDO-10 (0-237)<br>See NOTES 1&3 | OEA (0-183) | For arctic operation, refer to FM 9−207 | |
| Transmission | 48 Qts. (45.6 LI)<br>As Req. | OE/HDO-15 /40 (0-1236)<br><br>See NOTE 3 | OEA | OE/HDO-15/40 (0-1236) or OE/HDO-10 (0-237)<br>See NOTES 1&3 | OE/HDO-15/40 (0-1236) or OE/HDO-10 (0-237)<br>See NOTES 1&3 | OEA (0-183) | | |
| GO (MIL−PRF−2105) Lubricating Oil, Gear, Multipurpose<br><br>Traversing Mechanism | 3.5 Qts. (3.31 LI)<br><br>4 Qts. (3.78 LI) | | | GO-80/90 (0-226)<br><br>See NOTE 2 | GO-80/90 (0-226)<br><br>See NOTE 2 | GO-75 (0-186) | | |
| GAA (MIL−PRF−10924) Grease, Automotive and Artillery<br><br>GMD (MIL−G−21164) Grease, Molybdenum Disulfide<br><br>GGP (MIL−G−23549) Grease, General Purpose<br><br>Mount Cradle Bearing and Torque Key | As Req. | | | GMD | GGP | GAA (G-403) | | |
| Muzzle Brake Evacuator | As Req. | | | GMD (353) | | | | |
| OHT (MIL−PRF−6083) Hydraulic Fluid, Petroleum Base for Preservation and Operation<br><br>Hydraulic Powerpack & Equilibrator | 46 Qts. (43.51 LI) | | | OHT | OHT | OHT | | |
| Gun Mount & Replenisher | 30 Qts. (28.38 LI) | | | | | | | |

## NOTES

1. If OEA lubricant is required to meet the low expected-temperature range, OEA lubricant is to be used in lieu of OE/HDO-10 lubricant for all expected-temperature ranges where OE/HDO-10 is specified in the KEY.

2. Grade 85W-140 may be used when expected temperatures are above +10°F (-12°C). The NATO Code for 85/140 is 0-228.

3. Multigrade oil (15W-40) does not automatically replace single weight oils. Use 15W-40 oil to avoid seasonal oil changes if your operational conditions match the table.

## DAILY

This page shows you what to lubricate Daily when you operate the vehicle or fire the weapon.

Lubricant – Interval

| | | |
|---|---|---|
| CANNON BORE (See Item 4) | CLP | D |
| BORE EVACUATOR ASSEMBLY BALL VALVES (See Item 25) | GAA | D |
| RECUPERATOR (See Item 11) | OHT | D |
| VARIABLE RECOIL CYLINDERS AND COUNTER-RECOIL BUFFER (See Item 10) | OHT | D |
| HYDRAULIC POWERPACK RESERVOIR (See Item 3) | OHT | D |
| LOADER RAMMER BLOCKING VALVE PLUNGER AND ROLLER (See Item 12) | GAA | D |
| CRADLE CAM GROOVES (See Item 7) | GAA | D |

Interval – Lubricant

| | | |
|---|---|---|
| D | OE/HDO | TRANSMISSION (See Item 2) |
| D | OE/HDO | ENGINE CRANKCASE (See Item 1) |
| D | OHT | REPLENISHER SYSTEM (See Item 9) |
| D | CLP | CANNON BREECH AND FIRING MECHANISM (See Item 5) |
| D | CLP | CANNON BREECH RING BRACKET SUPPORT LUGS (See Item 6) |
| D | GAA | MOUNT CRADLE CAM HINGE PIN (See Item 8) |

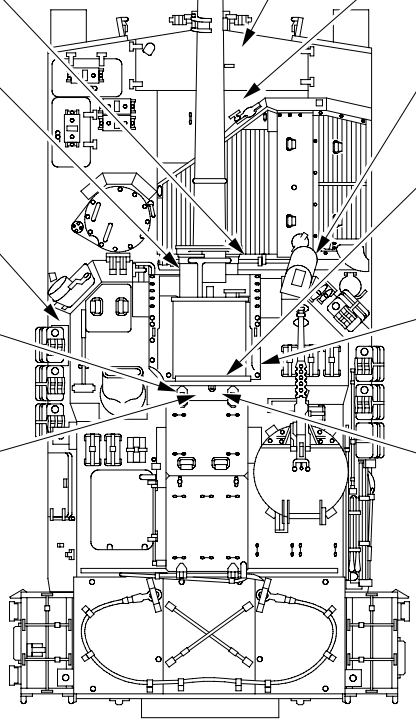

18ph055m

## NOTE

Gun mount ballistic shield removed for clarity.

| TOTAL MAN–HR | |
|---|---|
| INTERVAL MAN–HR | |
| D | 3.8 |

**CAUTION**

Power train assemblies (transmission and engine) must use OE-HDO-10W (MIL-PRF-2104) while under warranty.

1. ENGINE CRANKCASE

Before starting engine, open oil level access cover (1) and check oil for level between Add and Full marks on gage rod (2). Add oil as required to bring level between Add and Full marks on gage rod (2). Crankcase oil filler cap (3) is located in engine compartment.

**NOTE**

After an overnight stand, oil level may be 3/4-1 inch above the FULL mark on the dipstick. This is normal. However, if oil level is more than 1 inch above the FULL mark, check for internal coolant or fuel oil leaks.

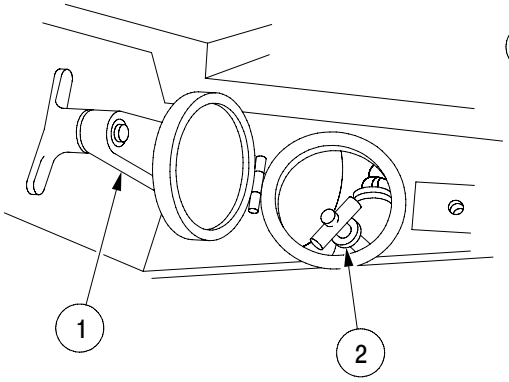


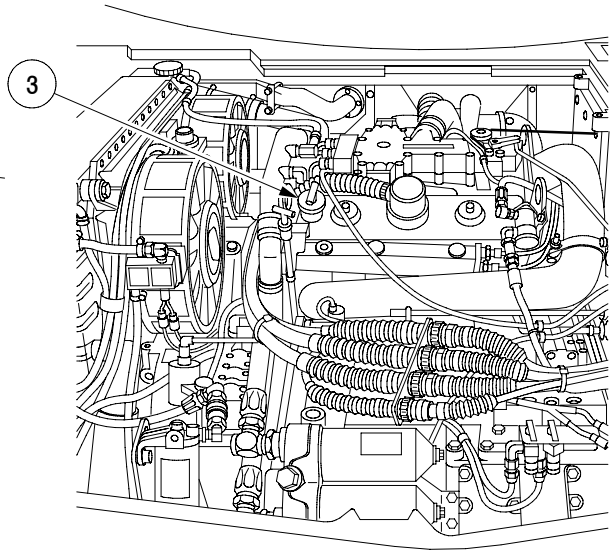


**NOTE**
Travel Lock Assembly and Grill Removed for clarity

2. TRANSMISSION

Check oil level daily after shutting engine down. The oil level must be within the OPERATING RANGE stamped on the gage rod and filler cap (4). Add or drain oil as required.

**NOTE**
VMS Removed for clarity

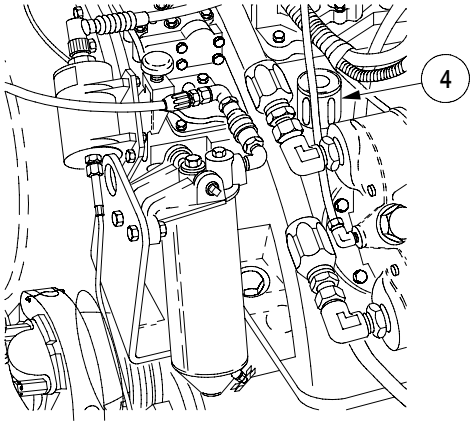


01ph006ma

3. HYDRAULIC POWERPACK RESERVOIR

**NOTE**

A zero pressure check must be performed prior to this step.

Before operation, check for air in system by observing sight plug (5). If there appears to be air in the system, the hydraulic powerpack needs to be bled.

a. Remove dust cap (6) from hydraulic powerpack reservoir (7).

b. Thread rod assembly (8) dipstick retainer (9) into bellows boss (10).

c. Read temperature indicated on thermometer (11) of the hydraulic powerpack reservoir (7).

d. Insert dipstick (12) to the graduation that corresponds to the temperature on the thermometer (11) of the hydraulic powerpack reservoir (7). If the dipstick bottoms out before reaching the thermometer temperature +10° F (-12°C), there is too much hydraulic fluid in the system. Perform step f. to bleed the hydraulic powerpack reservoir. If the dipstick does not bottom out after reaching the thermometer temperature -10° F (-23°C), the system is low and requires hydraulic fluid to be added (para 3-8.11).

**NOTE**

A 3/16 ID tube may be attached to the bleed valve nozzle to collect excess fluid.

e. Position a container to collect excess hydraulic fluid.

f. Open bleed valve (13).

g. Push dipstick (12) in the remaining distance to the graduation that corresponds to the temperature on the thermometer (11).

h. Lock the dipstick (12) in position with dipstick locking collar (14).

i. Close the bleed valve (13).

j. Fill the hydraulic powerpack reservoir with hydraulic fluid (para 3-8.11).

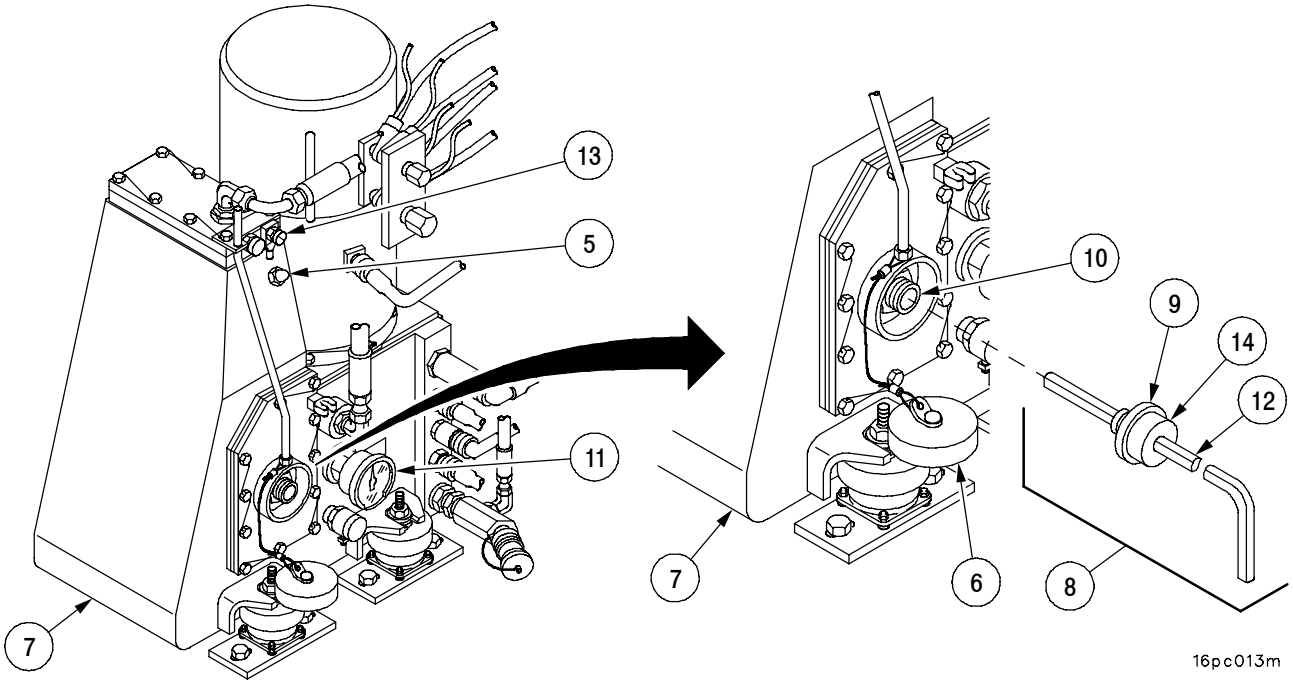

4. CANNON BORE

Cleaning Bore Using Artillery Cleaning Kit

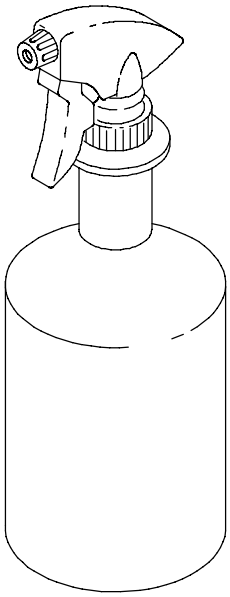

1 LITER SPRAY-TOP BOTTLE

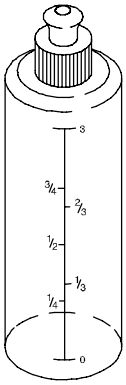


3.5 FL OZ CLP BOTTLE

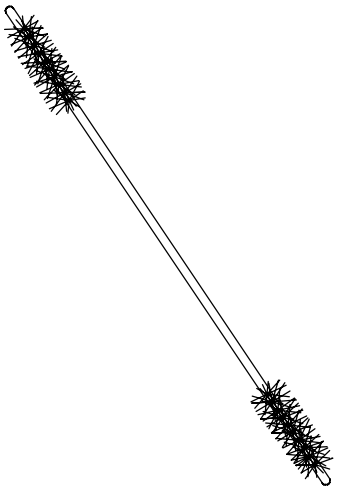

BORE EVACUATOR BRUSH

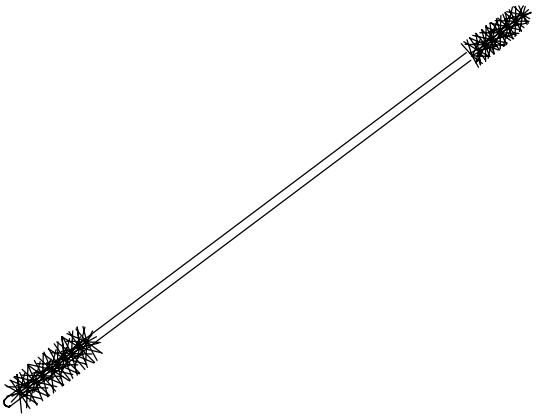

PRIMER VENT-SEAT BRUSH

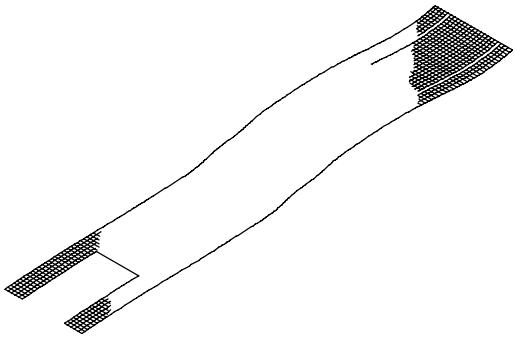

CLEANING SLEEVE

02pc143m

Clean and preserve your cannon as follows:

(1) DAY OF FIRING

(a) You need the following items:
1 each premeasured bottle of CLP.
1 each nylon bristle brush assembly.

(b) Attach bore—brush assembly to rammer staff.

(c) Inspect breech and tube and clear obstructions.

(d) Wet punch the tube as follows:

**NOTE**

Shake bottle well before each use.

Pour 1/4 of the bottle onto brush and punch the tube once forward and once back.

Pour second 1/4 of the bottle onto brush and scrub back and forth the entire length of the tube.

Repeat above step with third 1/4 of the bottle.

Pour final 1/4 of the bottle onto brush. Wet the entire length of the tube once forward and once back.

(2) DAY AFTER FIRING

(a) You need the following items:
2 each premeasured bottles of CLP.
3 each disposable cleaning sleeves.
1 each nylon bristle bore—brush assembly.

(b) Attach bore—brush assembly to rammer staff.

(c) Wet Punch. Wet punch the tube following the procedures for DAY OF FIRING above.

(d) Dry Punch. Wrap the brush with a new disposable cleaning sleeve and dry punch the entire length of the tube once forward and back. Remove and dispose of the sleeve.

(e) Wet Punch. Wrap the brush with a new disposable cleaning sleeve. Pour on half a premeasured bottle. Wet punch the entire length of the tube once forward and once back. Remove and dispose of sleeve.
Repeat above step with last half of bottle.

**NOTE**

If the tube has not been previously cleaned with CLP and there is a heavy buildup of coppering or carbon deposits, or severe heat cracking, it may be necessary to repeat cleaning per instructions until the tube has been thoroughly cleaned with CLP. For nonfiring periods, cannon is cleaned and lubricated weekly.

BREECH AND BORE EVACUATOR

Clean, lubricate and preserve the breech and bore evacuator as follows:

DAY OF FIRING You will need the following items from the kit:

1 each liter bottle CLP with trigger sprayer
1 each bore evacuator brush
1 each primer vent brush
Rags from general supply

Shake the liter bottle well before each use. See this appendix and maintenance sections of this TM for component disassembly/assembly.

(a) Thoroughly wet all breech components with CLP. Let soak for 10–15 minutes and then wipe off. Reapply a light coat of CLP.

(b) Spray CLP from the liter bottle onto all exposed metal surfaces.

(c) Disassemble bore evacuator following the disassembly instructions. (See item 25, page I–21).

(d) Thoroughly wet the evacuator balls, vent seats, and three metering orifices with CLP. Clean vents and orifices using the bore evacuator brush.

(e) Apply CLP to primer vent and thoroughly brush with primer vent brush.

(f) Thoroughly wet firing lock with CLP and wipe off all carbon and firing residue. Reapply a light coat of CLP.

5. CANNON BREECH AND FIRING MECHANISM

**CAUTION**

Do not clean obturator pad with CLP. Use soap and water only.

Immediately after firing, remove M49 firing mechanism and obturator spindle group (para 3-8.9). Using CLP, thoroughly clean all surfaces including breech threads (15). Lubricate the sliding area of firing mechanism with CLP. For nonfiring periods, cannon breech and firing mechanism are cleaned and lubricated weekly.

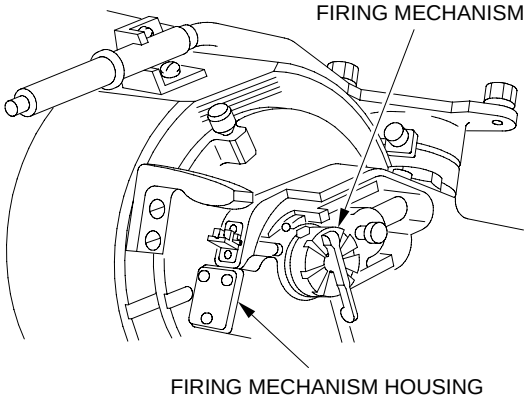


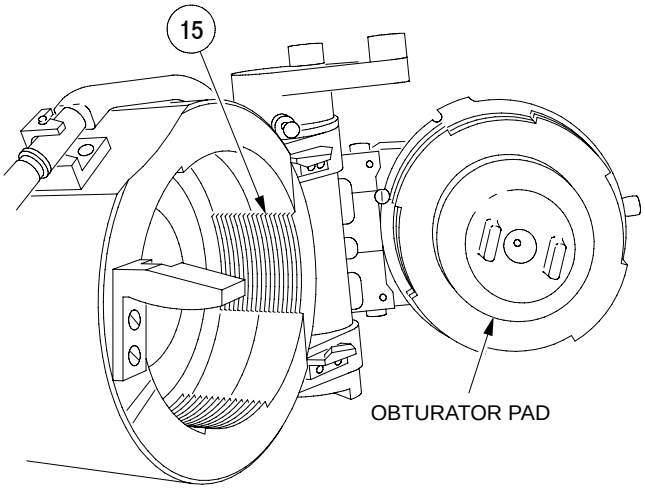


6. CANNON BREECH RING BRACKET SUPPORT LUGS

Lubricate both lugs (16) with CLP during periods when cannon is being fired. Lugs are cleaned along with tube.

7. CRADLE CAM GROOVES

Lubricate with GAA during periods when cannon is being fired.

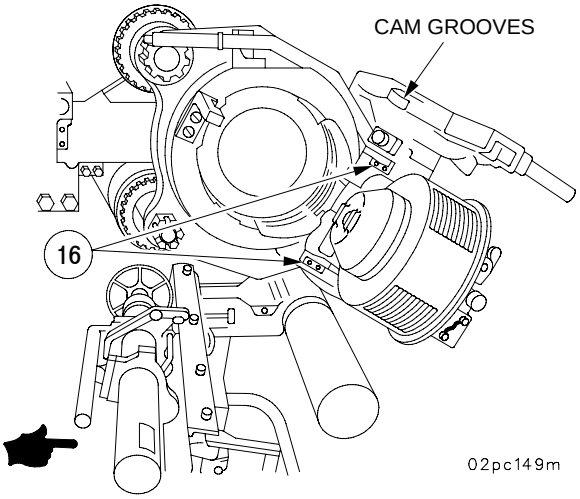

8. MOUNT CRADLE CAM HINGE PIN

Lubricate two fittings (17) with GAA between periods when cannon is being fired.

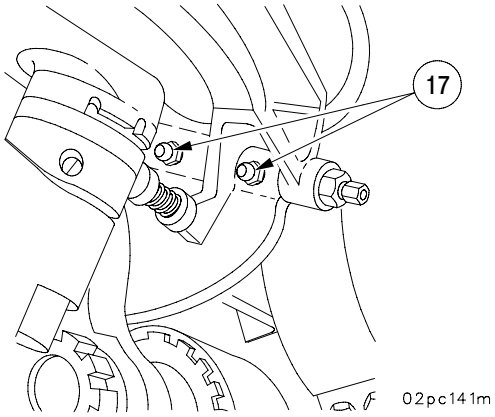


9. REPLENISHER SYSTEM

**CAUTION**

Do not bleed system pressure by loosening hydraulic fittings. Loosening fittings to bleed pressure will cause damage to adapter seal and fitting.

**NOTE**

Pressure may increase during normal firing due to heat expansion. Safe-to-fire range is 17–50 psi.

Check replenisher system pressure at replenisher gage manifold (18) on cab ceiling. Pressure should be between 17 and 24 psi at 70 degrees. If reading is low, replenish system with OHT hydraulic fluid as follows:

Place tube at zero elevation. Remove cap (19). Fill replenisher using M3 pump at valve (20) until gage (18) reads between 17 and 24 psi. If pressure is above 24 psi, bleed pressure by loosening bleed port plugs (21 and 22). Install cap (19).

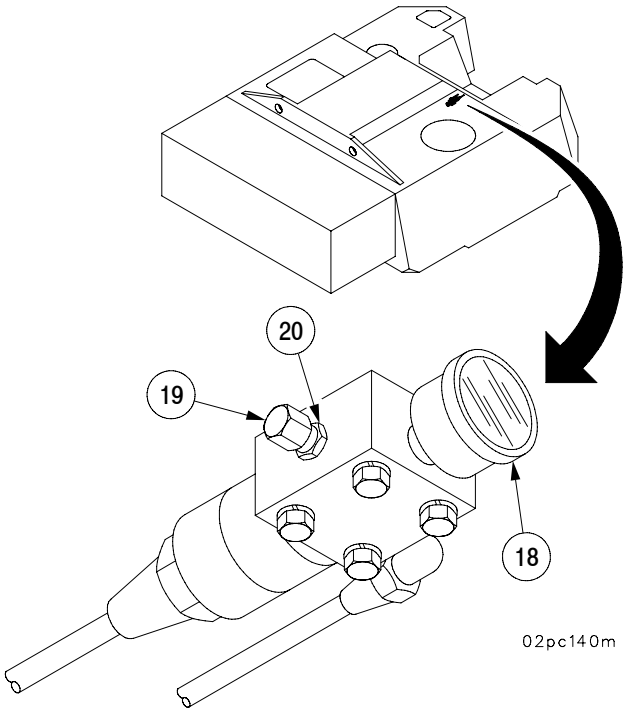


At 7 psi and below, on inside gage, go to bottle for filling. Between 8 to 16 psi fill at gage manifold.

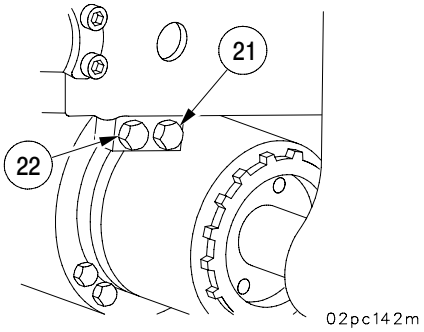

10. VARIABLE RECOIL CYLINDERS AND COUNTER-RECOIL BUFFER

**CAUTION**

- Proper bleeding of air from recoil mechanism is required before firing weapon to prevent damage to breech components of cannon assembly.
- Do not bleed system pressure by loosening hydraulic fittings. Loosening fittings to bleed pressure will cause damage to adapter seal and fitting.

To bleed recoil system:

a. Depress weapon to -50 mils. Loosen right-hand bleed plug (21) to bleed air from rear of buffer. When air-free fluid flows, tighten plug.

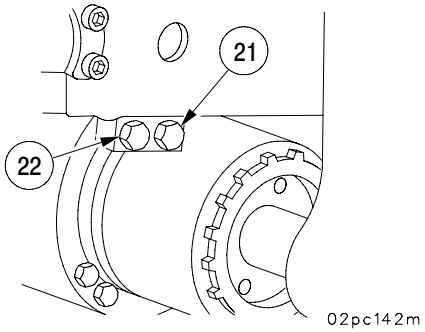


b. Elevate weapon to +50 mils. Loosen left-hand bleed plug (22) to bleed air from front of buffer. When air-free fluid flows, tighten plug.

c. Elevate weapon to 180 mils. Place container under transfer tube below ballistic shield. Remove quick-release pin (23) and open cover.

d. Open bleeder valve (24) (located on upper recoil cylinder). When air-free fluid can be seen through translucent transfer tube, close valve (24).

e. Recheck gage (18), must be between 17-24 psi. If low, add more fluid (OHT). If high, drain. Loosen either bleed plug (21 or 22) to drain.

f. Rebleed system several times and check for fluid leaks.

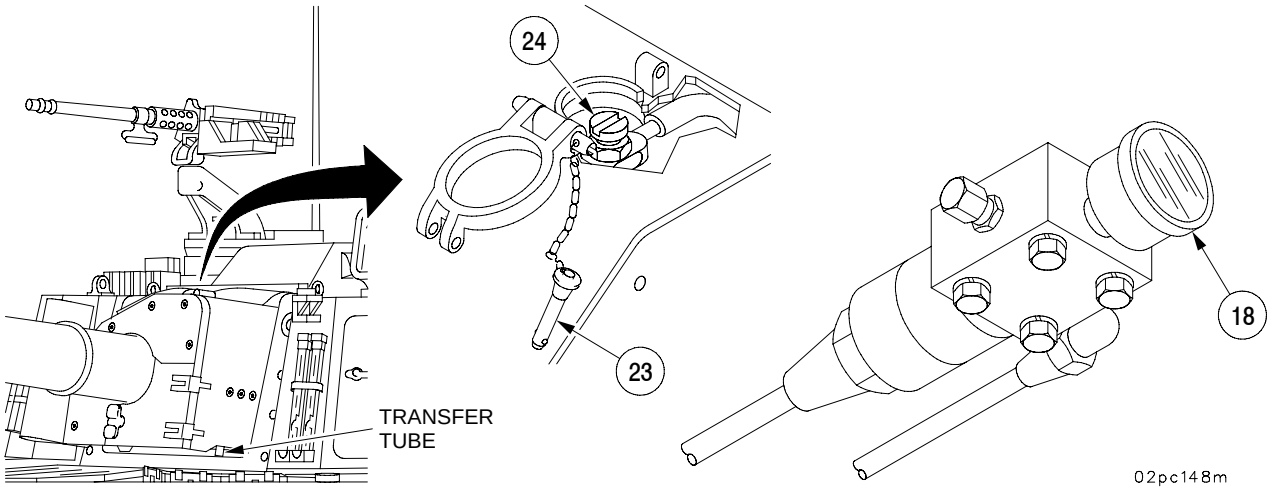

11. RECUPERATOR

**CAUTION**

- Check oil gun to be sure it contains hydraulic fluid and not grease.
- Do not overfill.

**NOTE**

- During firing, seepage of hydraulic fluid from recuperator is normal.
- To service recuperator, open access cover by loosening T-bolt and rotating access cover open.
- The recuperator can be filled using M3 oil gun or attaching recuperator/replenisher hose assembly to the hand pump assembly.

Before firing and after firing 100 rounds, sustained fire, check pins (25). Pins must not extend over 3/4 inch (19.05 mm). (Normal range for pins is 1/4 inch to 3/4 inch (6.35 to 19.05 mm)). If pins extend beyond 3/4 inch (19.05 mm), remove cap (26) from valve (27) and add hydraulic fluid (OHT) until pins extend 1/4 inch (6.35 mm).

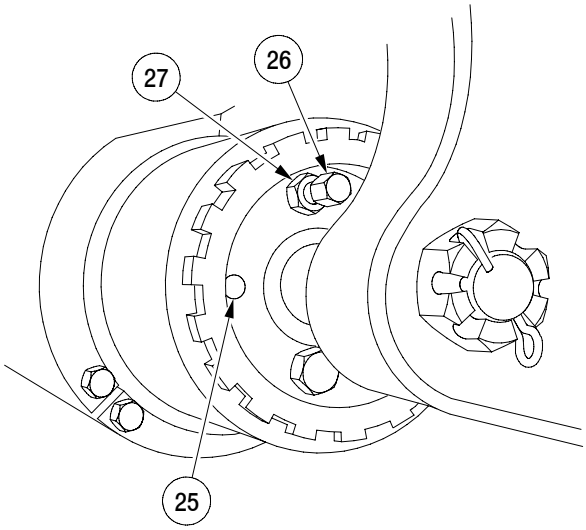


INSIDE

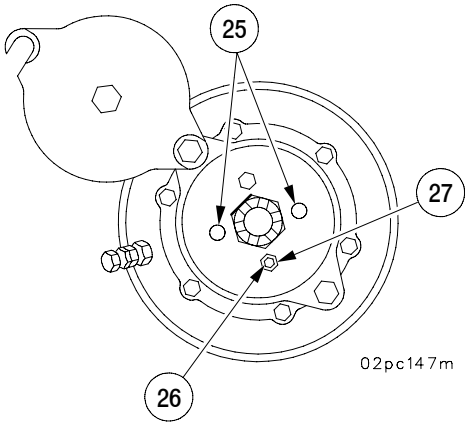


OUTSIDE

12. LOADER RAMMER BLOCKING VALVE PLUNGER AND ROLLER

Coat lightly with GAA during operation. Do not paint.

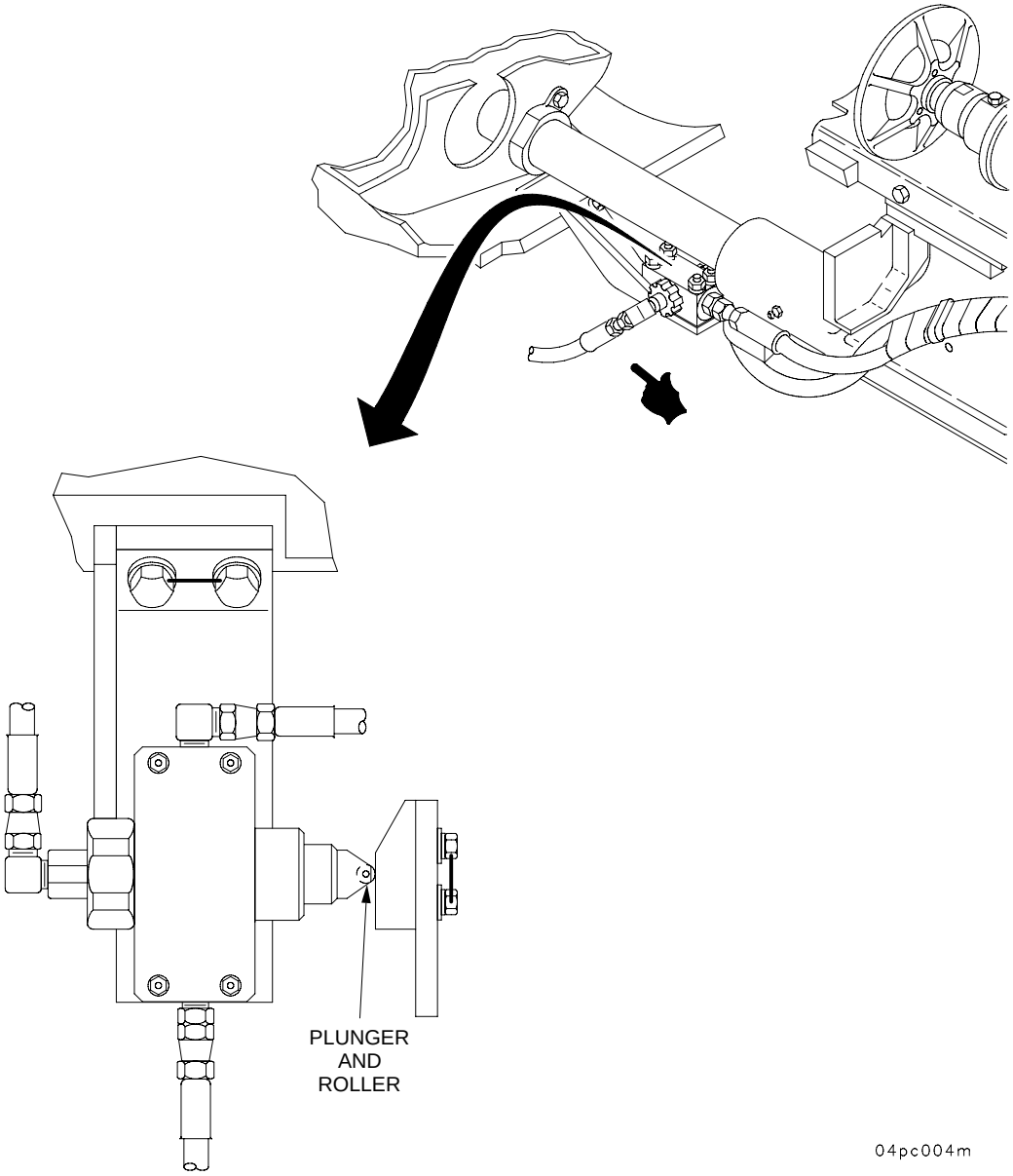

## WEEKLY

This page shows you what to lubricate Weekly when you operate the vehicle or fire the weapon

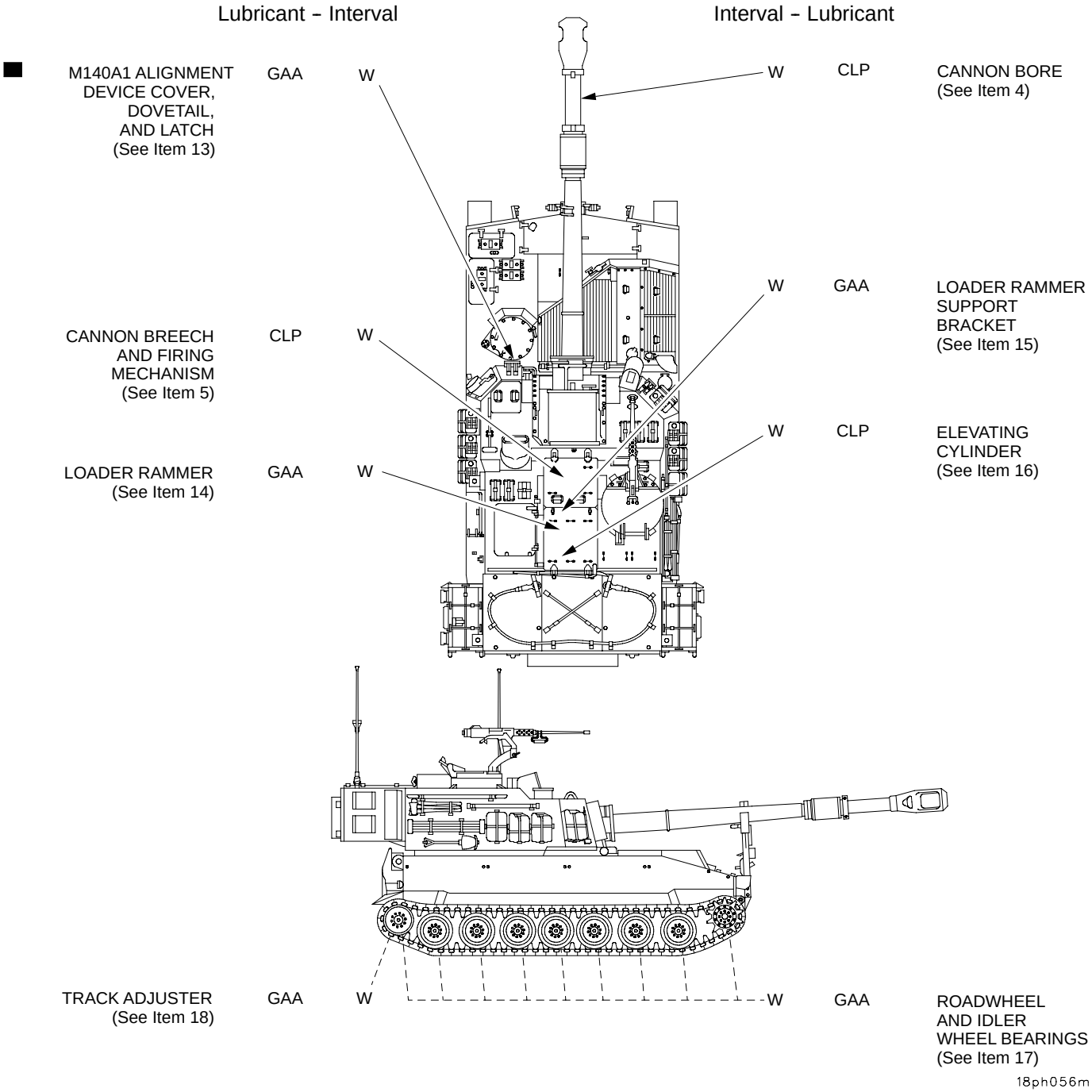

13. M140/M140A1 ALIGNMENT DEVICE COVER, DOVETAIL, AND LATCH

Grease dovetail (28) with GAA.

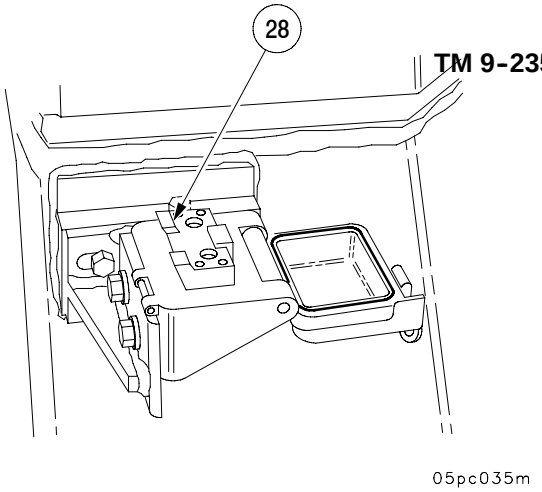


14. LOADER RAMMER

Lube two fittings (29) with GAA.

15. LOADER RAMMER SUPPORT BRACKET

Coat support bracket (30) lightly with GAA before operation. Do not paint.

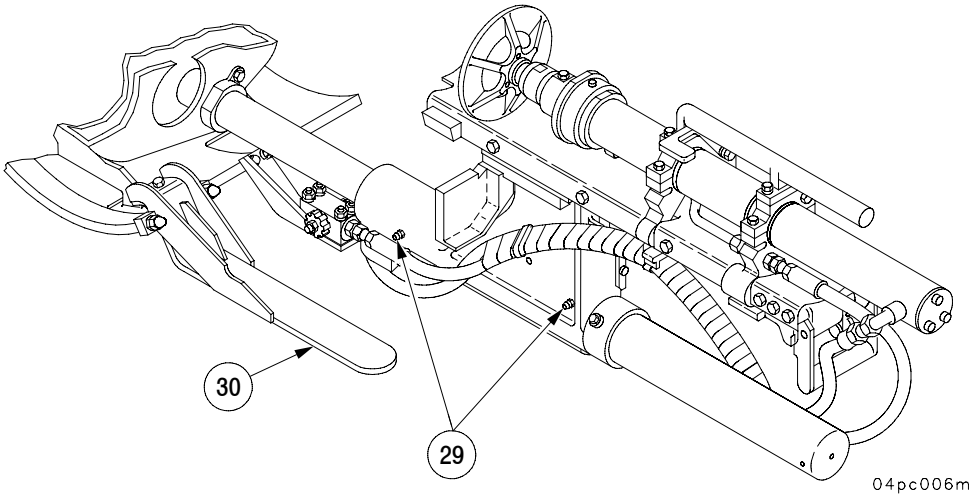


16. ELEVATING CYLINDER

Clean exposed piston rod surfaces (31) and coat with CLP.

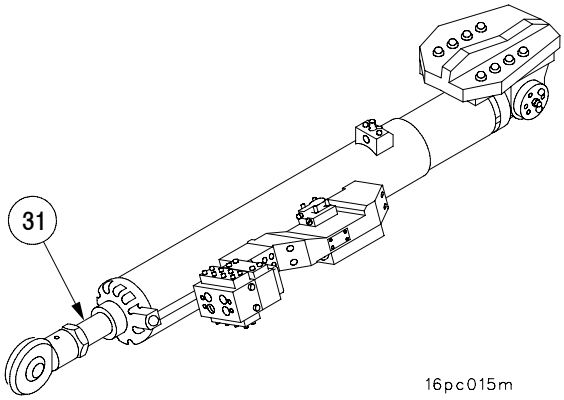

17. ROADWHEEL AND IDLER WHEEL BEARINGS

**CAUTION**

If grease seeps from hubs and/or housings before it flows from pressure relief valve, notify unit maintenance.

Lube fitting (32) with GAA grease until grease, without air, flows from pressure relief valve (33).

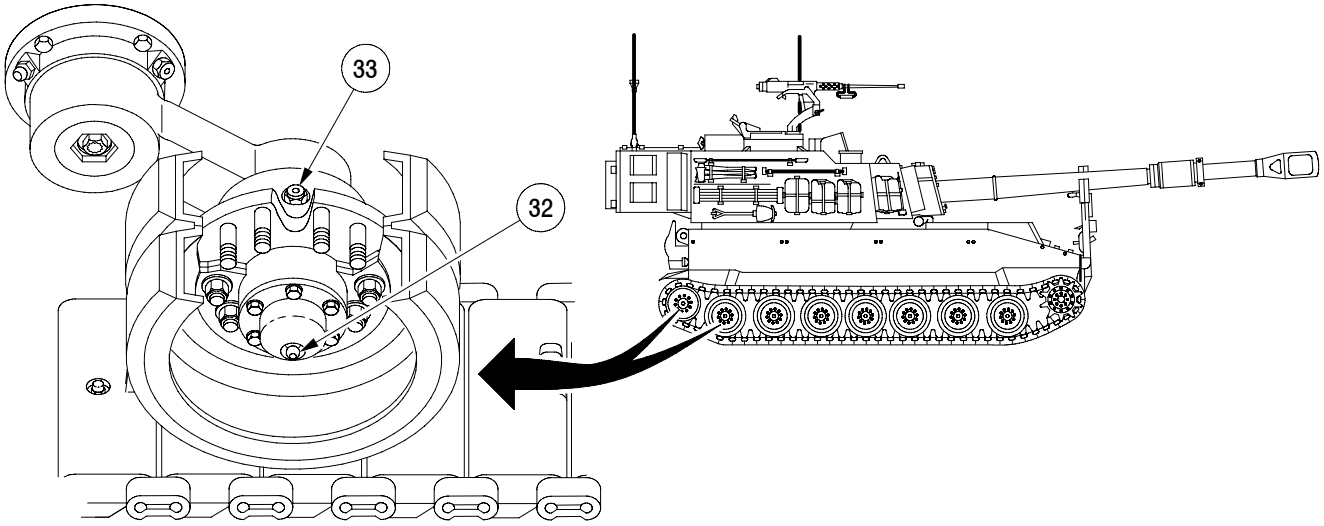


13ph012m

18. TRACK ADJUSTER

Detailed procedures for using GAA to adjust track tension are contained in para 3-7.5.

## MONTHLY

This page shows you what to lubricate Monthly when you operate the vehicle or fire the weapon.

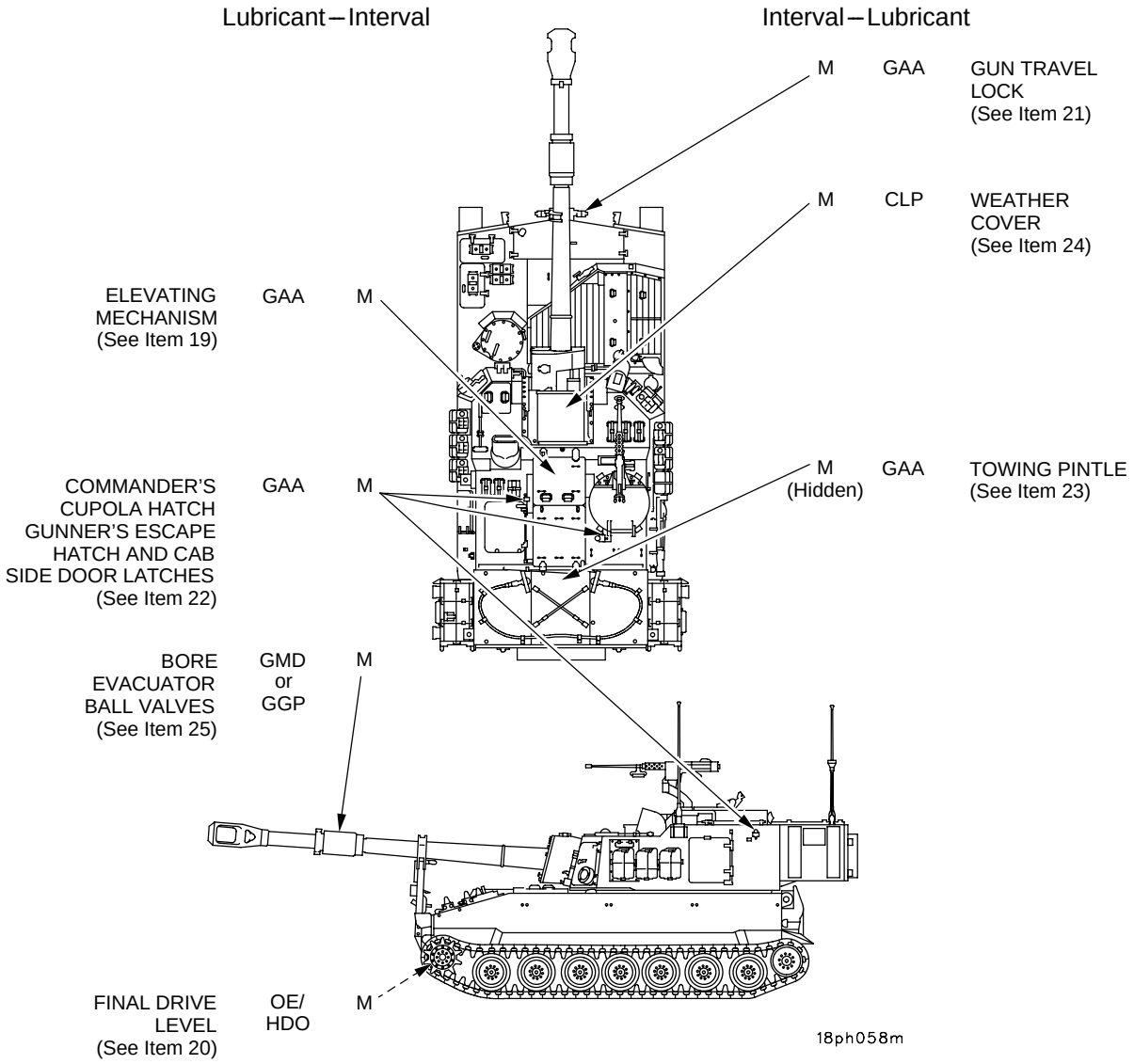


| TOTAL MAN–HR | |
|---|---|
| INTERVAL MAN–HR | |
| M | 2.1 |

19. ELEVATING MECHANISM

## NOTES

- Elevation mechanism must be at maximum elevation to lube front fitting (34).
- If elevation mechanism is equipped with self-lubricating pins, it does not require servicing.

Lube two fittings (34) and (35) with GAA.

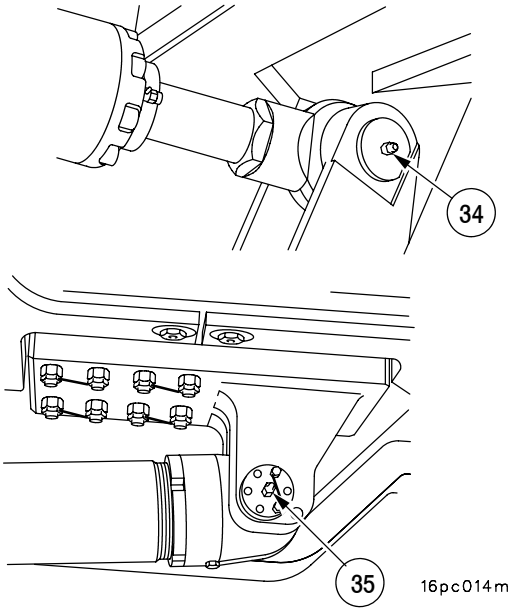


20. FINAL DRIVE LEVEL

Remove level check plug (36). Oil should be level with bottom of opening. If not, add OE/HDO until oil flows from level plug opening. Clean and reinstall plug (36).

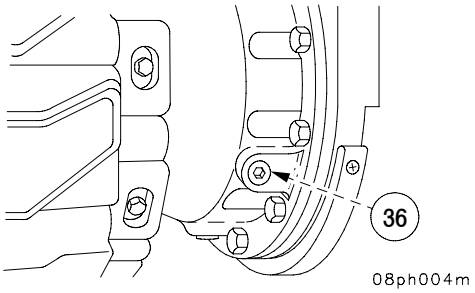


21. GUN TRAVEL LOCK

## NOTE

If grease is accidentally applied to travel lock cradle (37), it must be thoroughly removed.

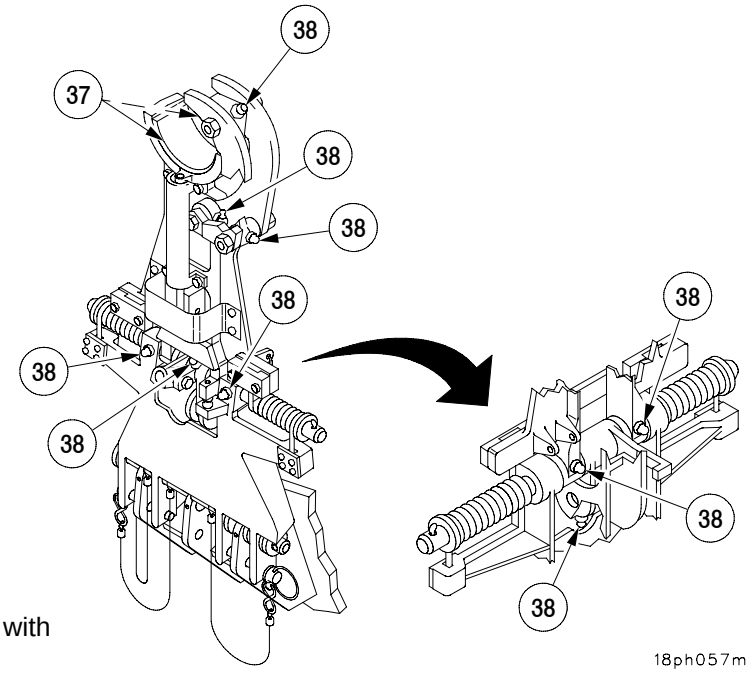


Lubricate nine fittings (38) on travel lock assembly with GAA.

22. COMMANDER'S CUPOLA HATCH, GUNNER'S ESCAPE HATCH, AND CAB SIDE DOOR LATCHES

Lubricate cab side door latch fittings (39) and gunner's escape hatch latch fittings (40) with GAA.

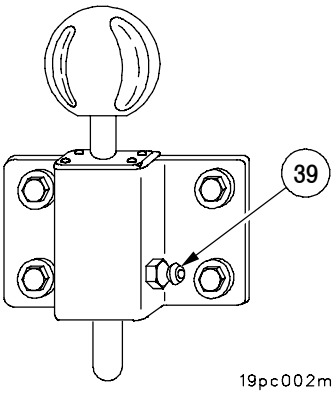


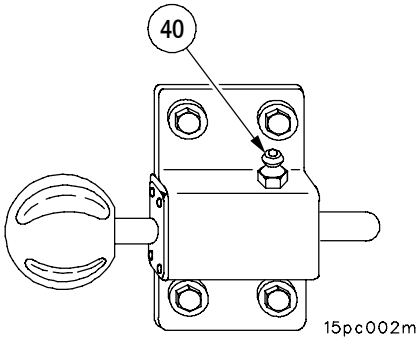


23. TOWING PINTLE

Lube three fittings (41) with GAA.

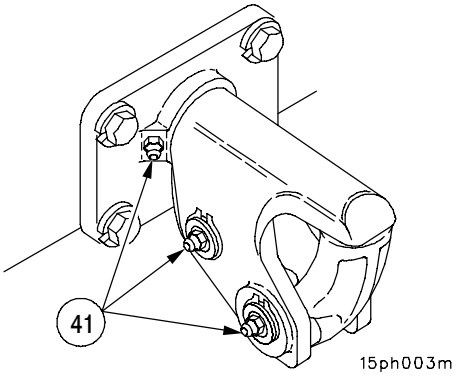


24. WEATHER COVER

Lube springs and pin (42) with CLP.

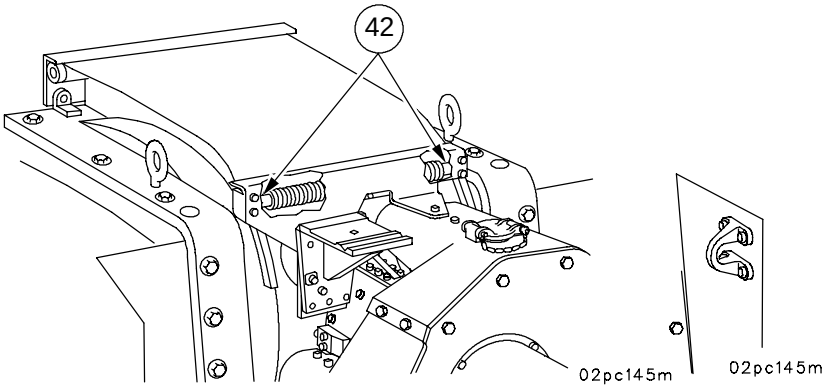


25. BORE EVACUATOR ASSEMBLY BALL VALVES

After firing, separate main reservoir (43) and move prereservoir (44) forward toward muzzle. Refer to para 3-8.8. Slide valve ring (45) forward and remove nine evacuator ball valves (46). The balls should fall out. Thoroughly clean evacuator ball valves (46), nine prereservoir orifices (46.1), 10 evacuator orifices (47) and tube threads (48) with CLP, using brush (11686340). Clean three metering holes (49) with CLP, using brush (8432358). Apply light coat of GMD or GGP to balls, ring, and unpainted tube surfaces before assembling. Inspect O-rings (preformed packings) (50 and 51), on inner and outer grooves of prereservoir (44) and (52) on inside groove main reservoir (43) for damage or missing. Inspect for gas wash and soot past O-rings. If any of these conditions exist, notify unit maintenance for replacement of O-rings. Remove any accumulation of soot from inside main reservoir. For nonfiring periods, bore evacuator and evacuator balls are cleaned and lubricated monthly.

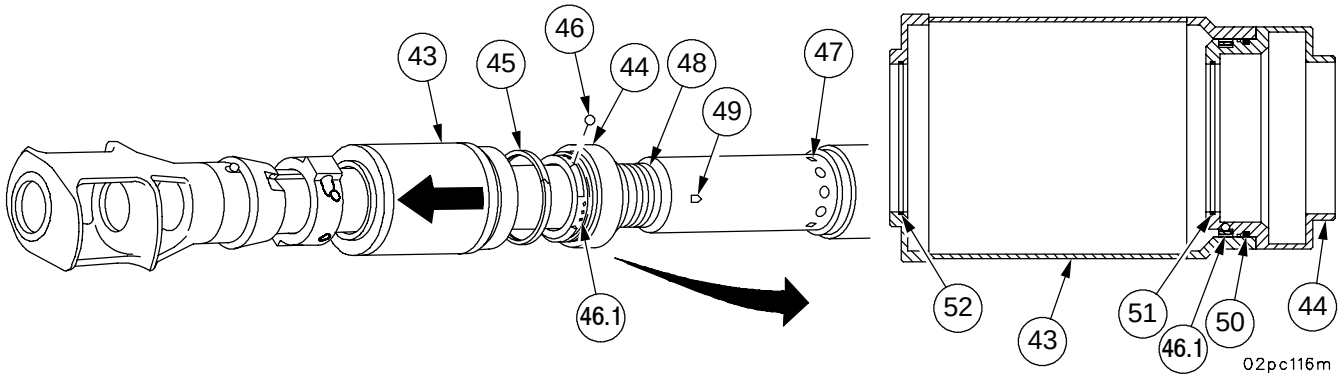

## QUARTERLY

This page shows you what to lubricate each Quarter when you operate the vehicle or fire the weapon.

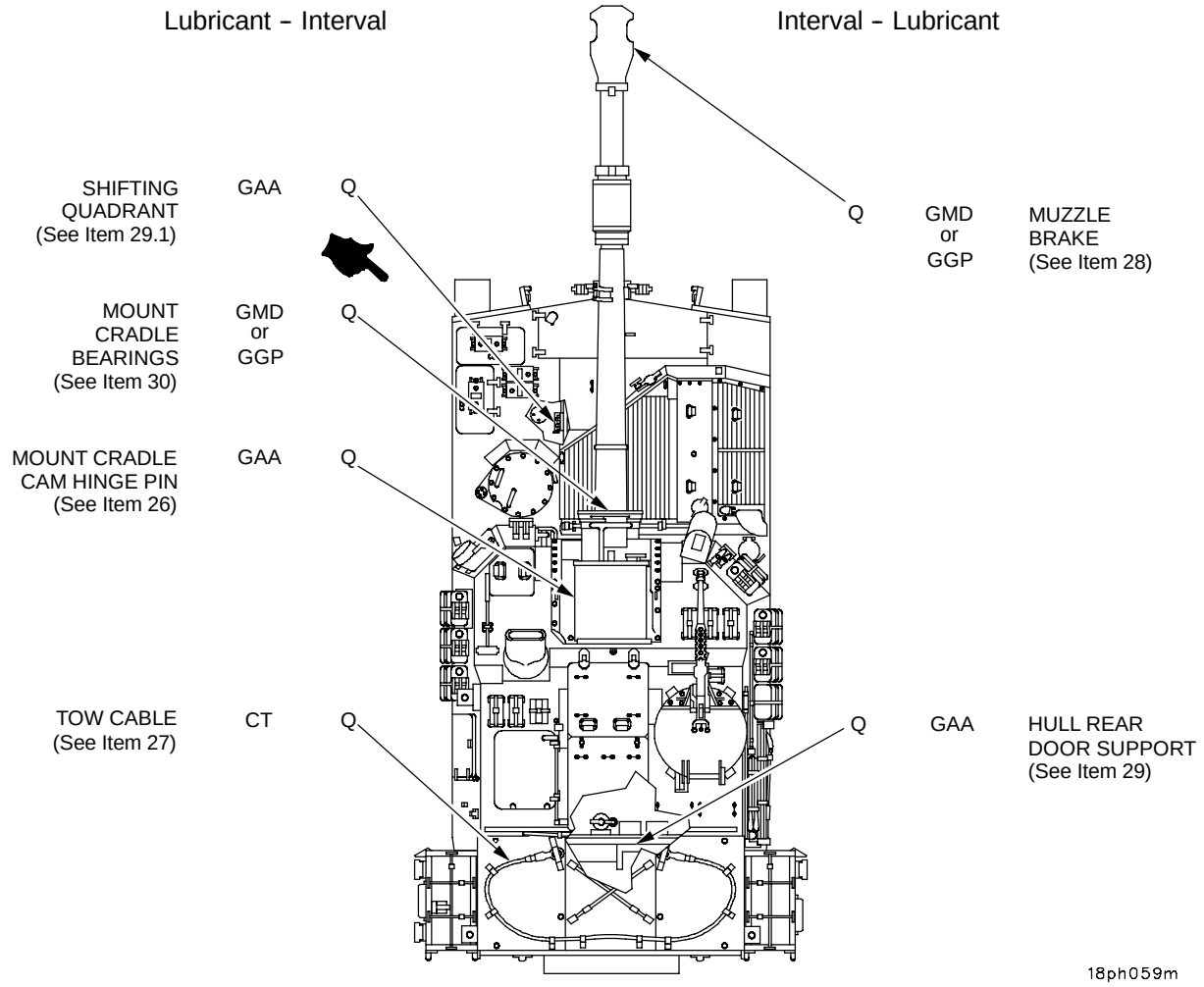


### NOTE

Gun mount ballistic shield removed for clarity.

| TOTAL MAN–HR | |
|---|---|
| INTERVAL MAN–HR | |
| Q | 3.1 |

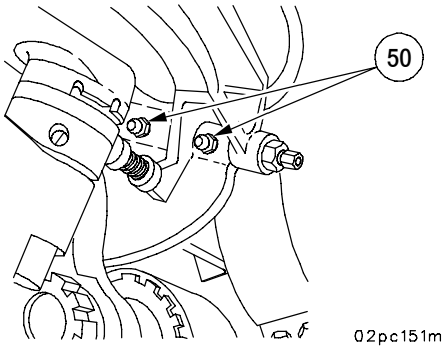


26. MOUNT CRADLE CAM HINGE PIN

Lube two fittings (50) with GAA. This is a Daily lube if you are firing.

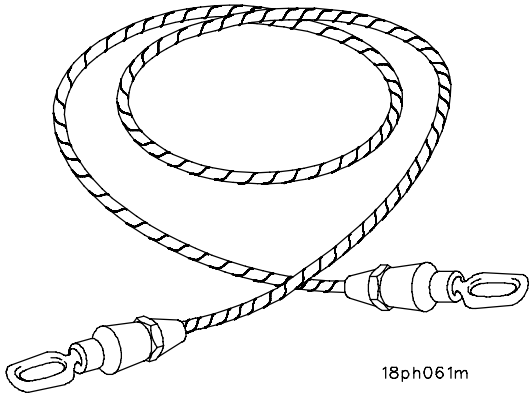


27. TOW CABLE

Clean tow cable with MIL–PRF–680 and coat with CT.

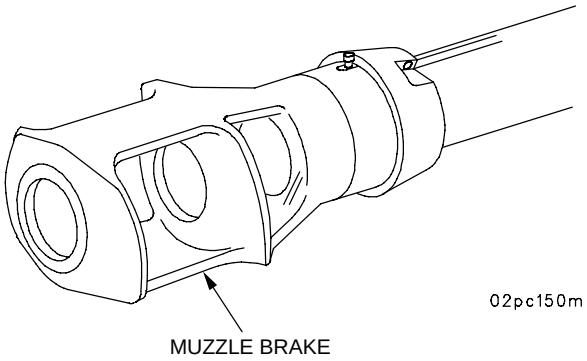


28. MUZZLE BRAKE

Quarterly, or every 300 rounds fired, remove, clean threads, and coat with GMD or GGP before installing.

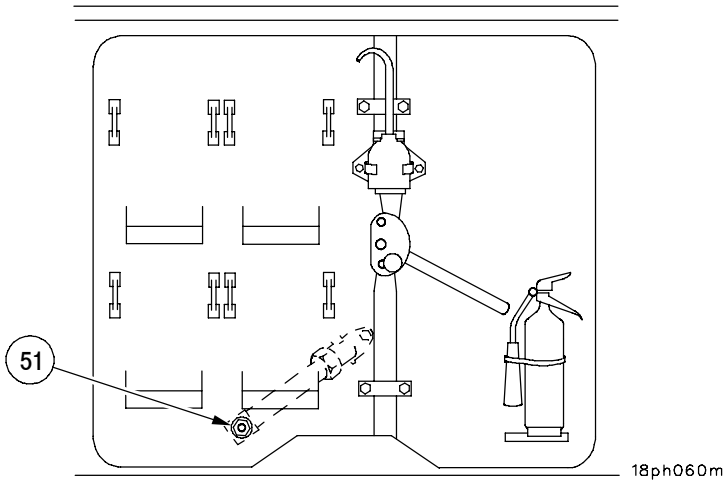


29. HULL REAR DOOR SUPPORT

Lube fitting (51) with GAA.

29.1 SHIFTING QUADRANT

Lube fitting (51.1) with GAA.

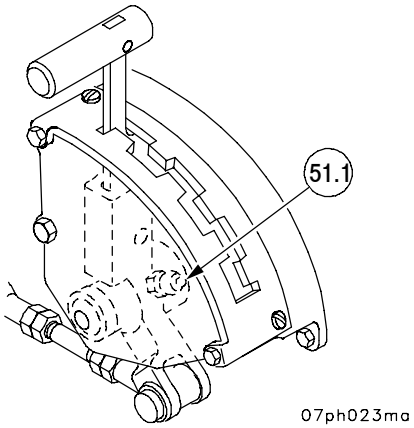

30. MOUNT CRADLE BEARINGS

**CAUTION**

For sustained operation at 0°F temperature or below, change grease to GAA. When changing grease remove cannon. Notify direct support maintenance for removal of cannon. Wipe grease from recess between cradle bearings and repack with GMD or GAA. Do not mix greases.

**NOTE**

For clarity, inside of mount is shown out of howitzer. Right side fittings (shown) are on top; left side fittings are on bottom. Fittings on inside are located approximately 90° apart.

Every 500 rounds fired, lube cradle bearing fittings (52) (four inside and six outside) with GGP or GMD.

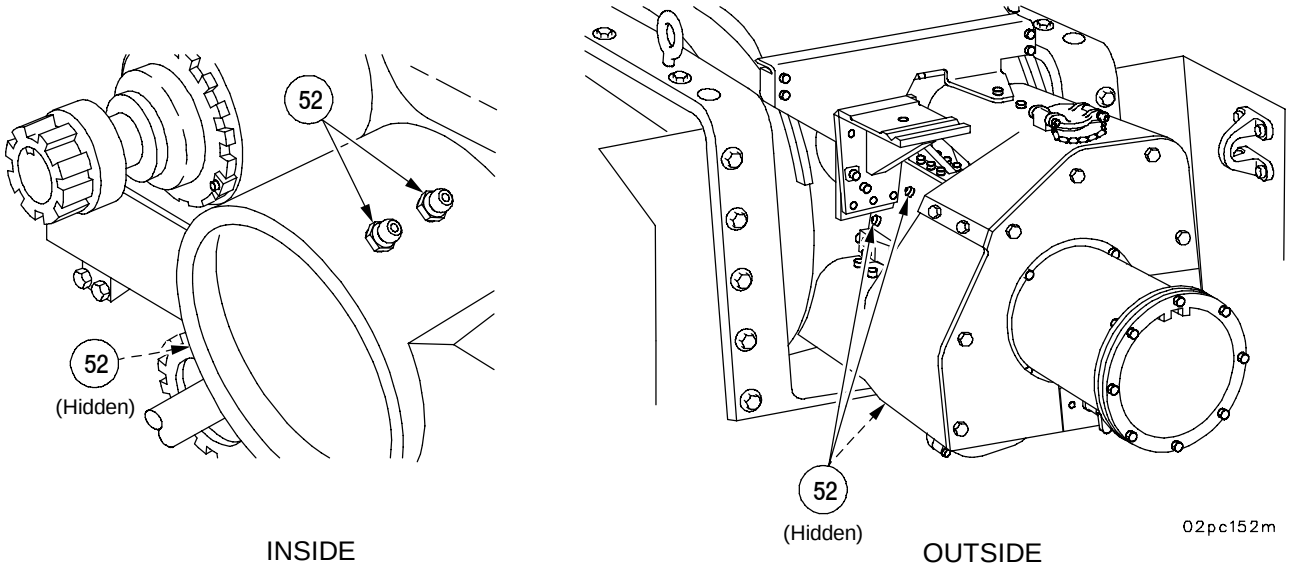


INSIDE

OUTSIDE

## SEMI–ANNUALLY

This page shows you what to lubricate Semi-Annually when you operate this vehicle. Coordinate any required seasonal changes with these services.

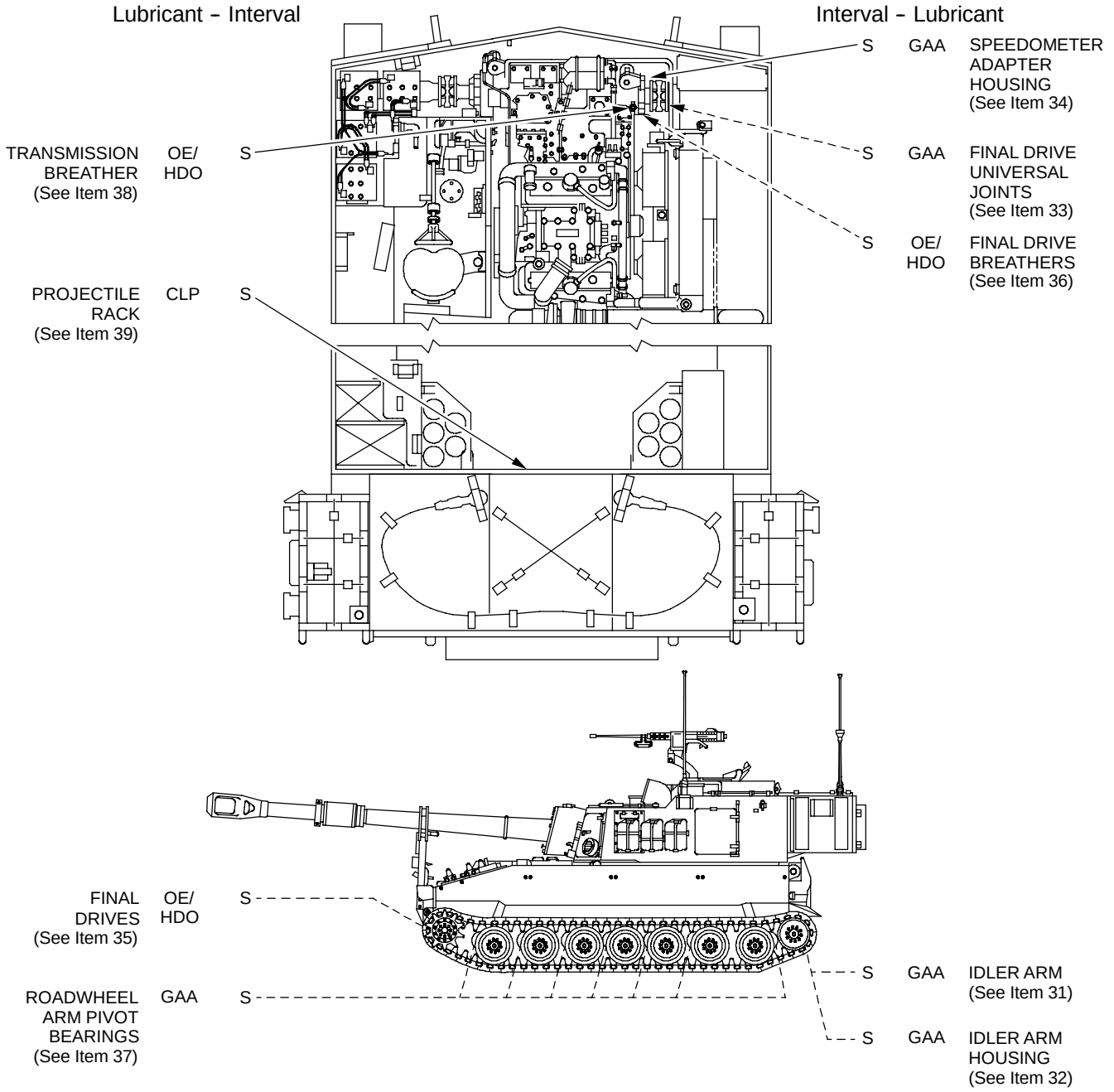


| TOTAL MAN–HR | |
|---|---|
| INTERVAL MAN–HR | |
| S | 6.0 |

31. IDLER ARM

Lube fittings (53) with GAA using hand grease gun until grease, without air, flows from pressure relief valve (54).

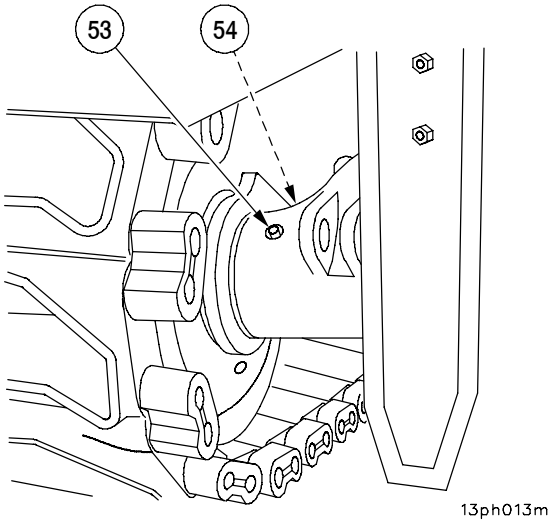


32. IDLER ARM HOUSING

Remove pipe plug (55) and install grease fitting (4730−00−050−4208). Lube with GAA using hand grease gun. Remove fitting and reinstall plug.

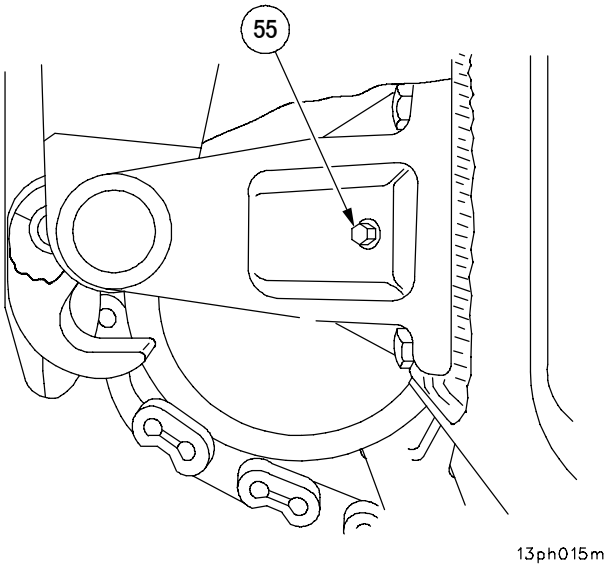


33. FINAL DRIVE UNIVERSAL JOINTS

Lube two fittings (56) each side with GAA. Rotate universal joints to reach fittings.

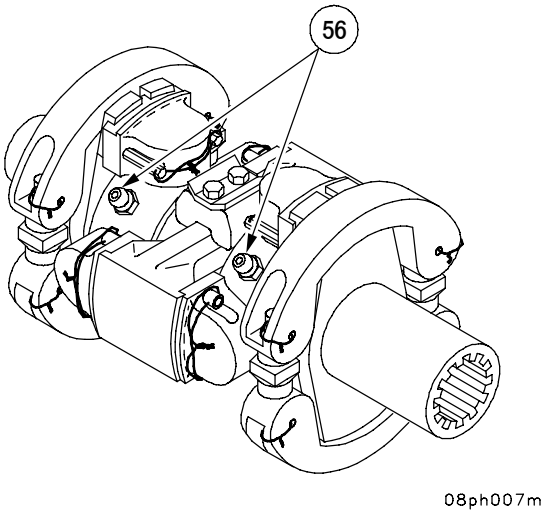


34. SPEEDOMETER ADAPTER HOUSING

Lubricate fitting (57) sparingly with GAA.

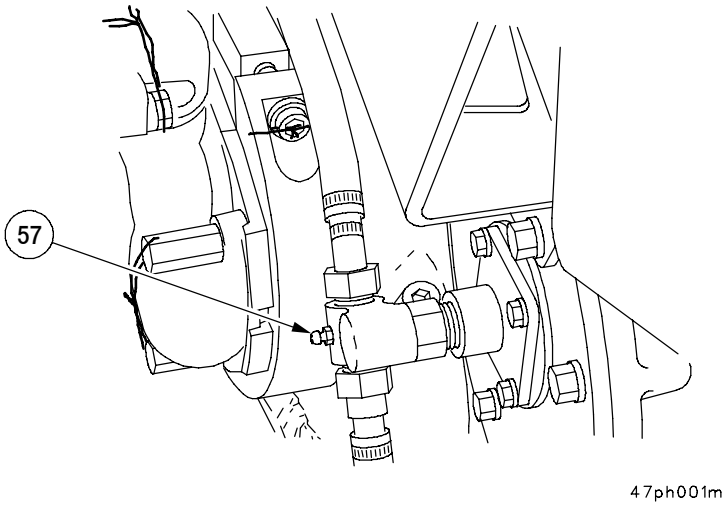

35. FINAL DRIVES

**NOTE**

Notify unit maintenance if you find pieces of metal stuck to magnetic drain plug.

Drain final drives (only after operation). Coordinate any required seasonal change of oil weight with this service. Remove both level (58) and drain (59) plugs. Clean and install drain plug (59) and add OE/HDO at level plug (58) until oil flows from level plug opening. Clean and install level plug (58).

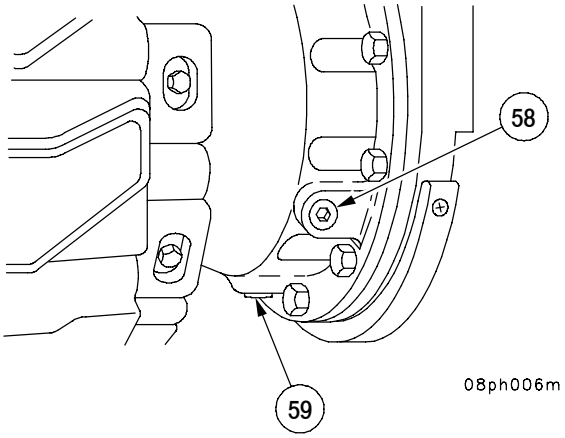


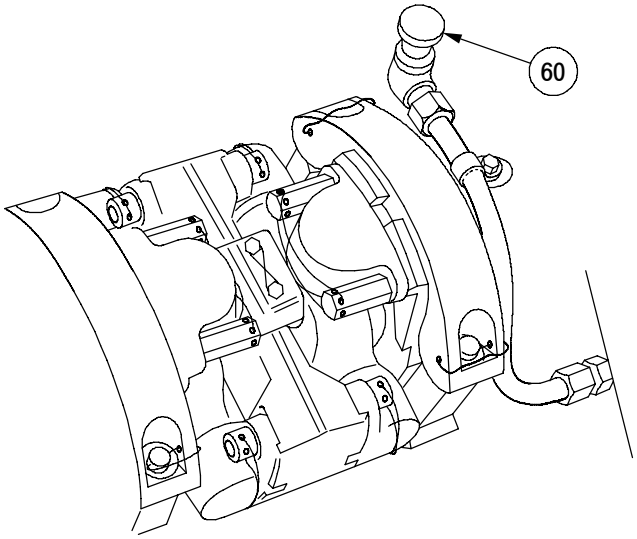


36 FINAL DRIVE BREATHERS

Remove breathers (60) at each coupling. Clean with MIL−PRF−680. Allow to dry. Dip in OE/HDO, and reinstall.

37. ROADWHEEL ARM PIVOT BEARINGS

**CAUTION**

If grease seeps from hubs and/or housings, before it flows from pressure relief valve, notify unit maintenance.

Lube fitting (61) with GAA grease until grease, without air, flows from pressure relief valve (62).

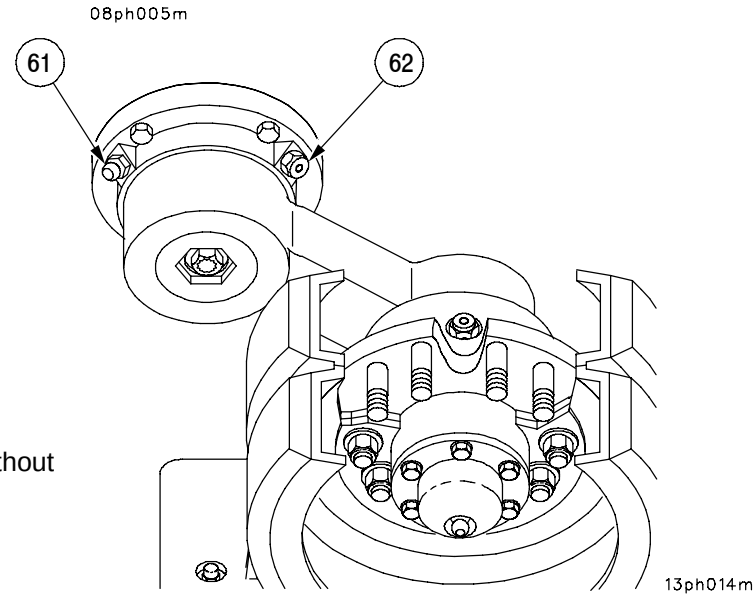

38. TRANSMISSION BREATHER

Remove breather (63). Clean with MIL-PRF-680. Allow to dry. Dip in OE/HDO, and reinstall.

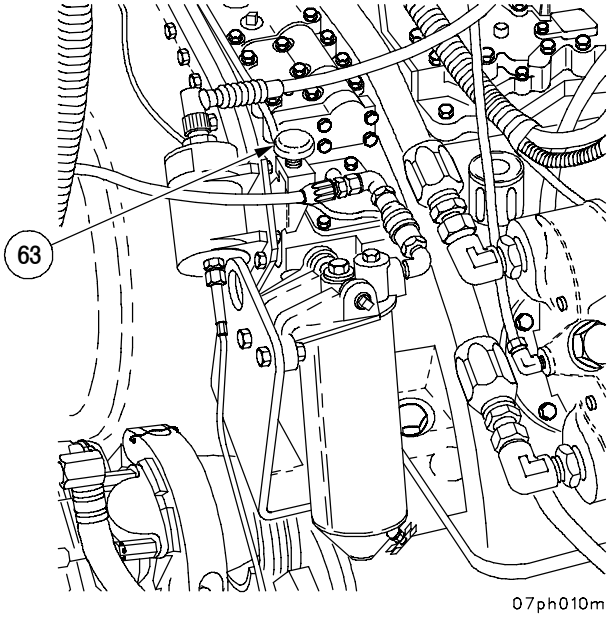


39. PROJECTILE RACK

**NOTE**

Wipe excess CLP from rubber bushings.

Lube locking caps and spacers (64) on projectile rack. Apply CLP at the contacting surfaces of the caps and spacers.

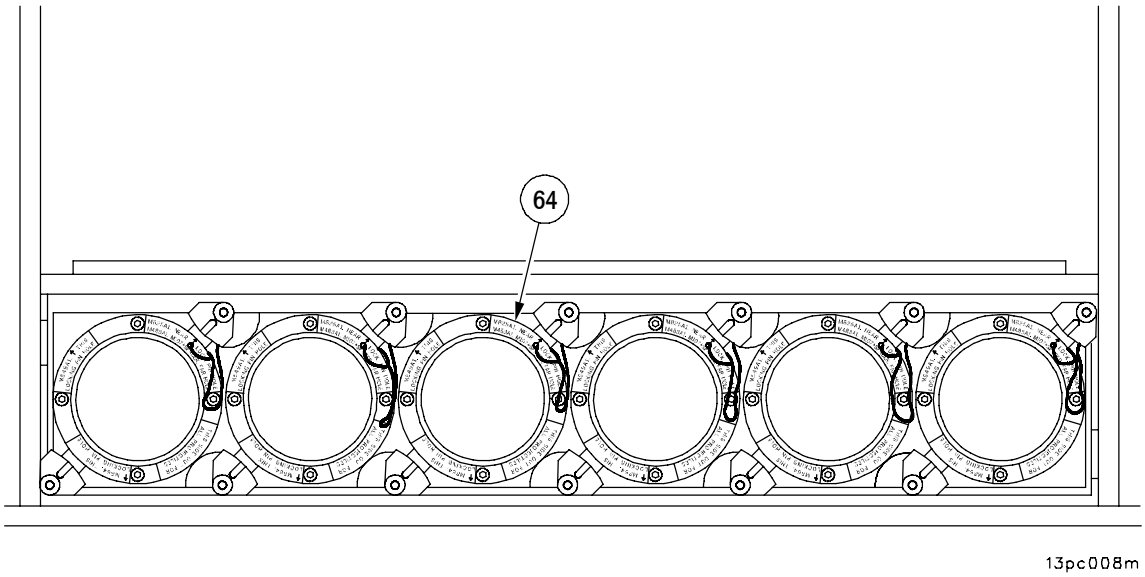

## ANNUALLY

This page shows you what to lubricate Annually.

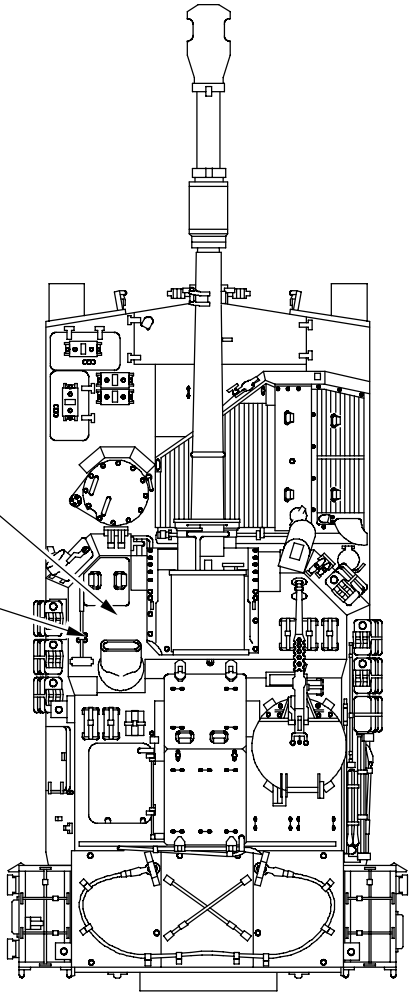


| Lubricant | Interval |
|---|---|
| TRAVERSING MECHANISM GEAR BEARING (See Item 40) GAA | A |
| TRAVERSING MECHANISM OIL FILL AND LEVEL (See Item 41) GO | A |

| TOTAL MAN–HR | |
|---|---|
| INTERVAL MAN–HR | |
| A | 13.9 |

40. TRAVERSING MECHANISM GEAR BEARING

Lube fitting (65) with GAA. Wipe clean.

**NOTE**

Place bucket under mechanism to catch oil.

41. TRAVERSING MECHANISM OIL FILL AND LEVEL

Remove single line from large tee (66). Remove tee, clean inside of tee and screen with MIL-PRF-680. Allow to dry. Reinstall tee.

Remove plug at fill port (67) and level plug (68). Oil should be level with bottom of opening (68). If not, fill with GO lubricant through port (67).

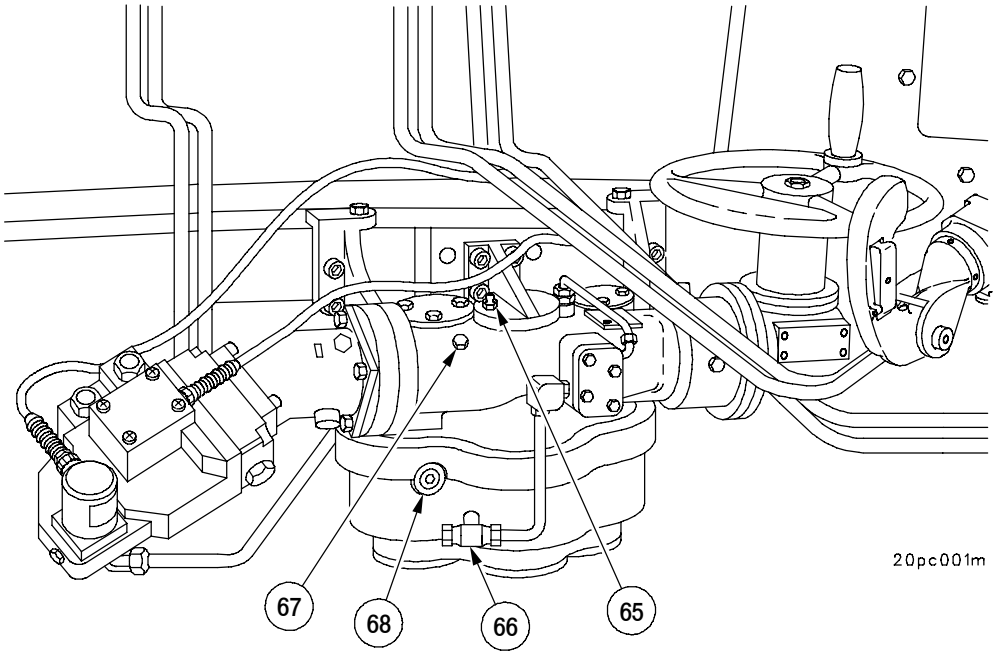

## OIL CAN POINTS

LUBRICATE QUARTERLY WITH SEASONAL GRADE OIL, OE/HDO, CLP, or OEA. Clean lubrication points and wipe off excess lubricant.

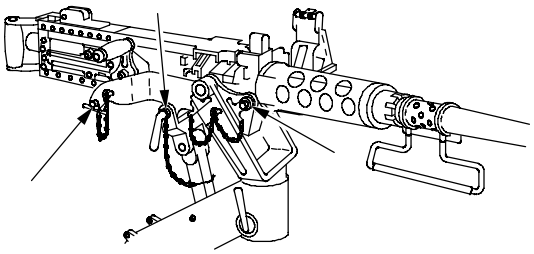

MACHINE GUN CRADLE LOCKING PINS

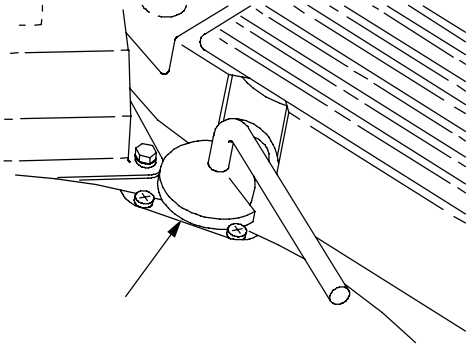

DRIVER'S HATCH COVER LOCK

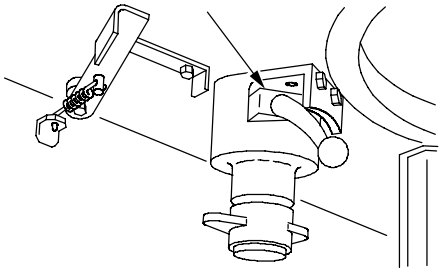

DRIVER'S HATCH COVER OPERATING LEVER

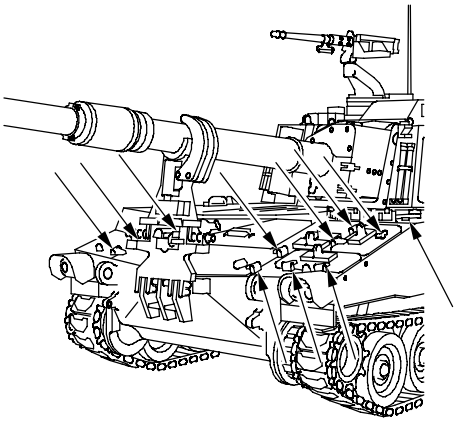

HINGES AND LATCHES FOR GRILLES, DOOR AND COVERS

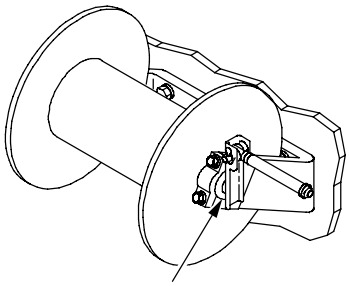

TELEPHONE CABLE REEL

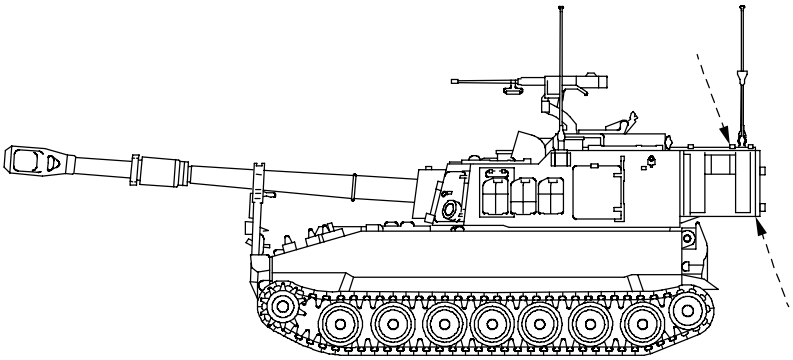

STOWAGE BASKET HINGES

18ph077m

## OIL CAN POINTS

LUBRICATE QUARTERLY WITH SEASONAL GRADE OIL, OE/HDO, CLP, or OEA. Clean lubrication points and wipe off excess lubricant.

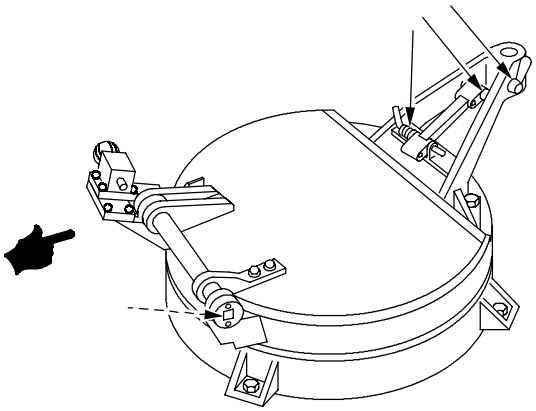

COMMANDER'S CUPOLA HATCH COVER HINGE AND MACHINE GUN PINTLE SUPPORT

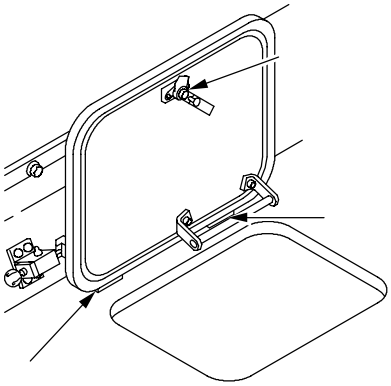

GUNNER'S ESCAPE HATCH LATCH AND HINGES

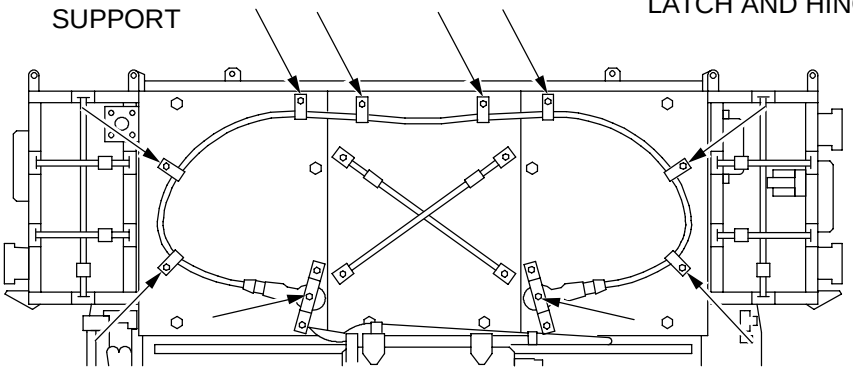

TOW CABLE MOUNTING BRACKETS

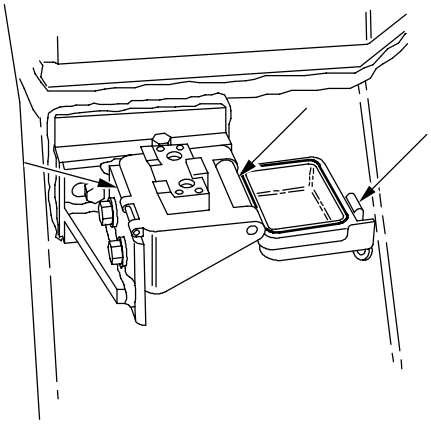

M140/M140A1 ALIGNMENT DEVICE MOUNT ASSEMBLY

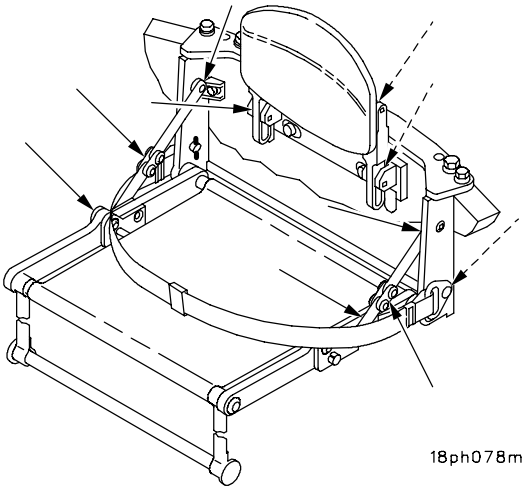


CREW SEAT HINGES

## OIL CAN POINTS

LUBRICATE QUARTERLY WITH SEASONAL GRADE OIL, OE/HDO, CLP, or OEA. Clean lubrication points and wipe off excess lubricant.

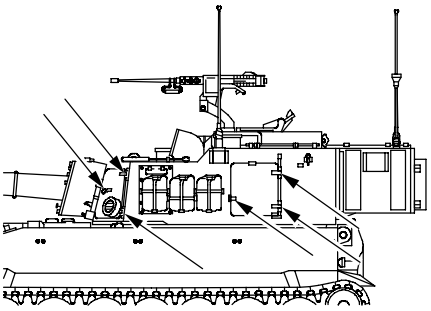

CAB SIDE DOOR AND HYDRAULIC COMPARTMENT ACCESS DOOR HINGES AND LATCHES

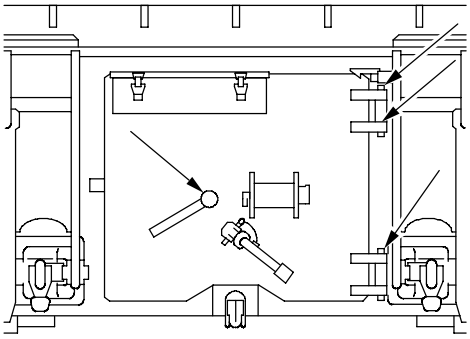

HULL REAR DOOR HINGES, LATCHES, AND CATCH AND LATCHES

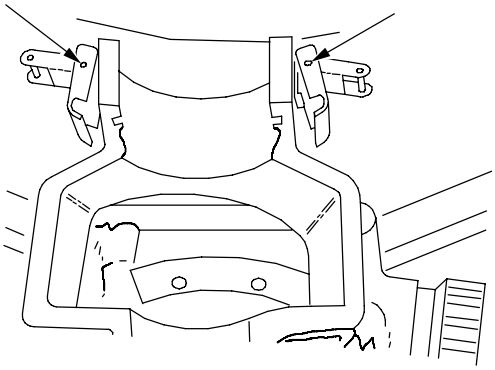

PANORAMIC TELESCOPE MOUNT LATCHES

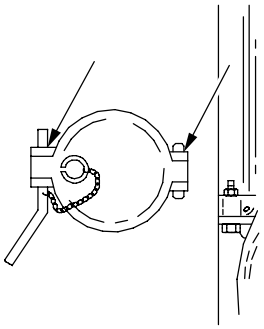

FUEL FILLER AND RADIATOR FILLER ACCESS COVERS

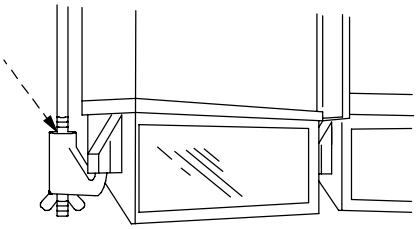

DRIVER PERISCOPES RETAINING LATCHES

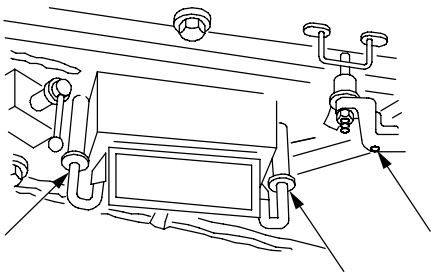

COMMANDER'S CUPOLA HATCH COVER LOCK AND PERISCOPE RETAINING LATCHES

18ph074m

## OIL CAN POINTS

LUBRICATE QUARTERLY WITH SEASONAL GRADE OIL, OE/HDO, CLP, or OEA. Clean lubrication points and wipe off excess lubricant.

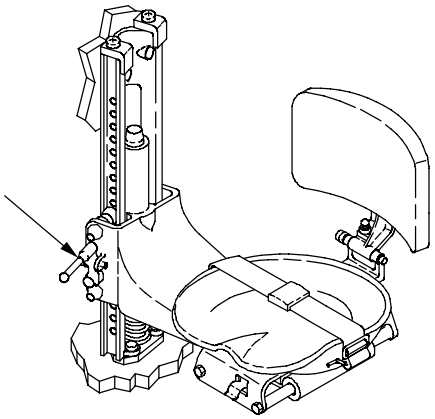

DRIVER'S SEAT MOVING PARTS

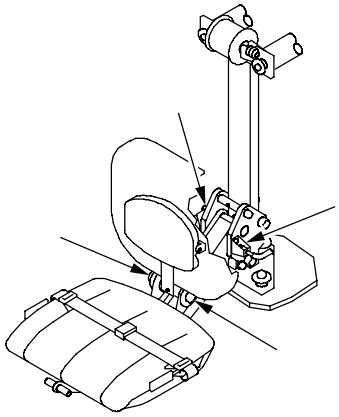

COMMANDER'S SEAT MOVING PARTS

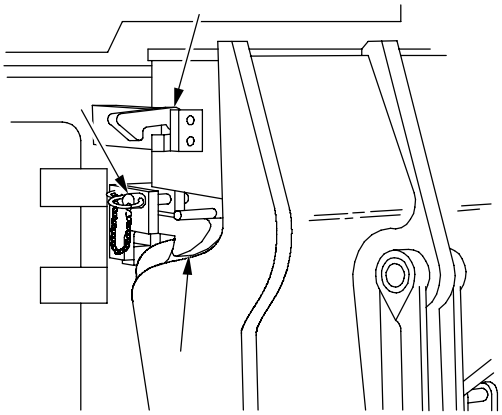

SPADE CATCH AND PIN

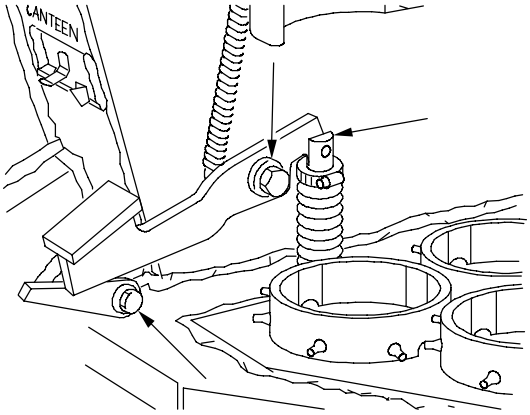


SPADE LOCKING LEVER AND LATCH

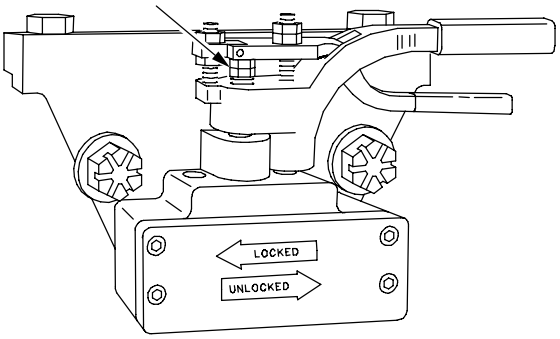


CAB TRAVERSING LOCK

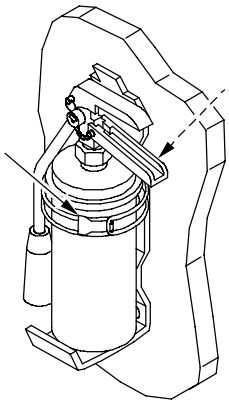

PORTABLE FIRE EXTINGUISHER BRACKETS

18ph079m

## OIL CAN POINTS

LUBRICATE QUARTERLY WITH SEASONAL GRADE OIL, OE/HDO, CLP, or OEA. Clean lubrication points and wipe off excess lubricant.

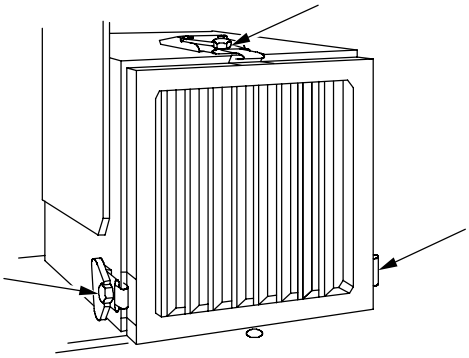

LEAD PARTICULATE FILTER HOUSING LATCHES

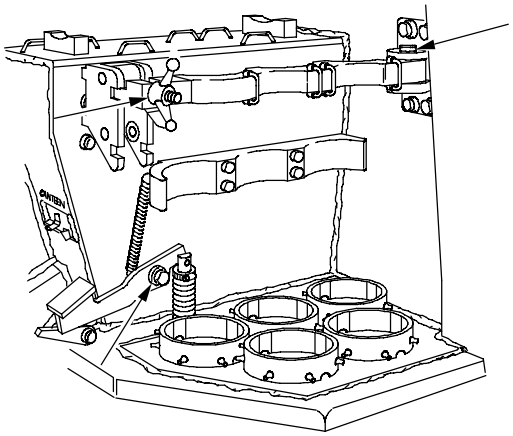

HULL REAR PROJECTILE STOWAGE RACK HINGES

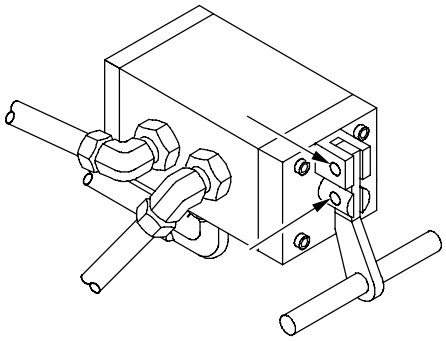

LOADER RAMMER CONTROL VALVE ASSEMBLY

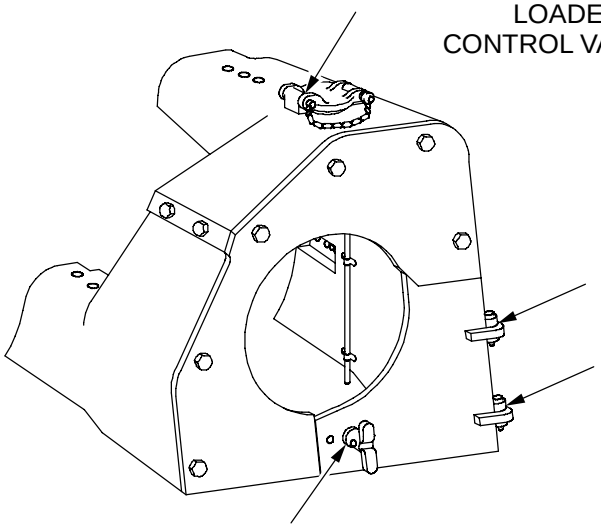

GUN MOUNT BALLISTIC SHIELD HINGE PINS AND LATCHES

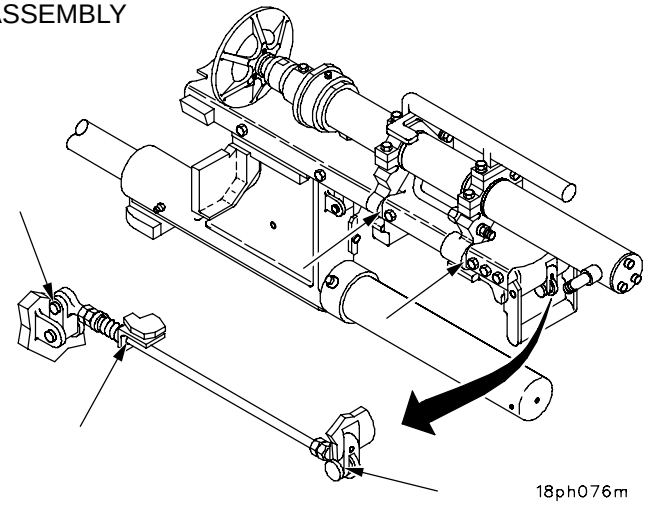


LOADER RAMMER HINGE PINS

## OIL CAN POINTS

LUBRICATE QUARTERLY WITH SEASONAL GRADE OIL, OE/HDO, CLP, or OEA. Clean lubrication points and wipe off excess lubricant.

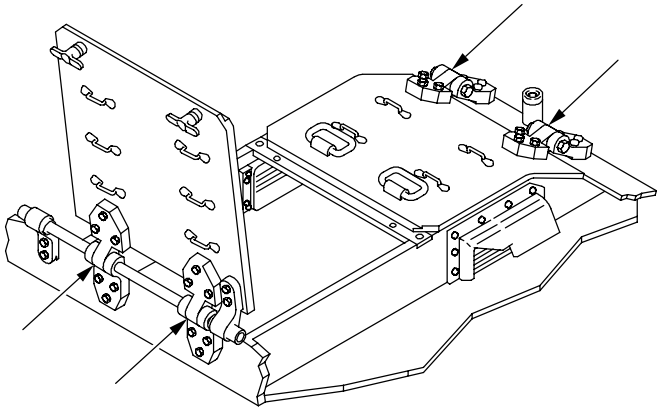

MCS BALLISTIC COVER DOOR HINGES

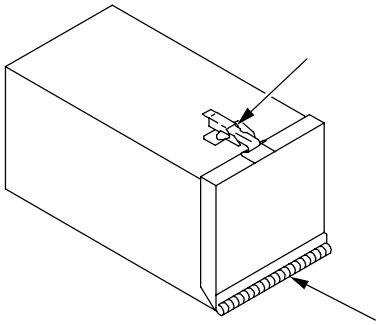

LEFT SIDE GRENADE BOX HINGES AND LATCHES

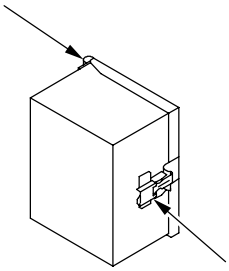

EXTERNAL COMMUNICATION BOX HINGES AND LATCHES

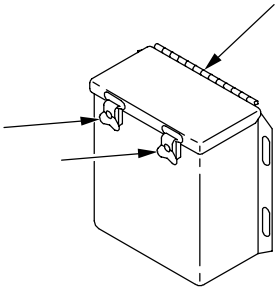

LEFT SIDE HAND PUMP BOX HINGES AND LATCHES

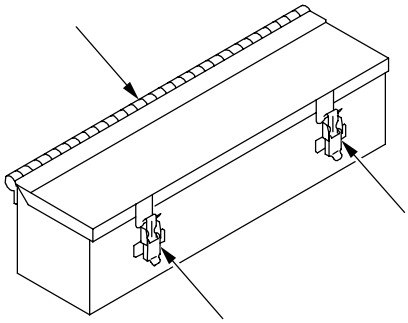

REAR DOOR GRENADE BOX HINGES AND LATCHES

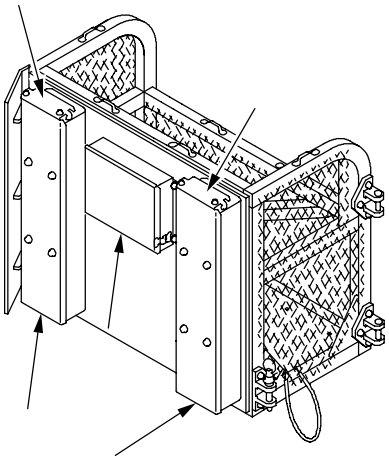

LEFT SIDE STOWAGE BOX HINGES AND LATCHES

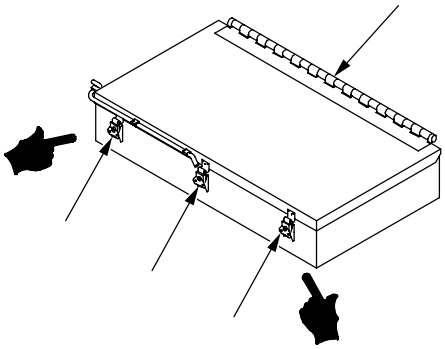

AT4 STOWAGE BOX HINGES AND LATCHES

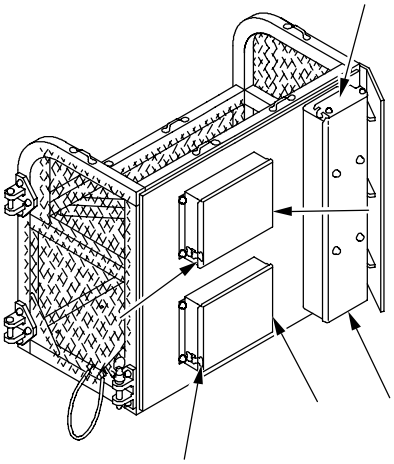

RIGHT SIDE STOWAGE BOX HINGES AND LATCHES

18ph075m

# QUARTERLY LUBRICATION POINTS

QUARTERLY LUBRICATION INSTRUCTIONS

## NOTE

Apply a few drops of CLP on rod end bearing indicated by arrows. Wipe off excess lubricant.

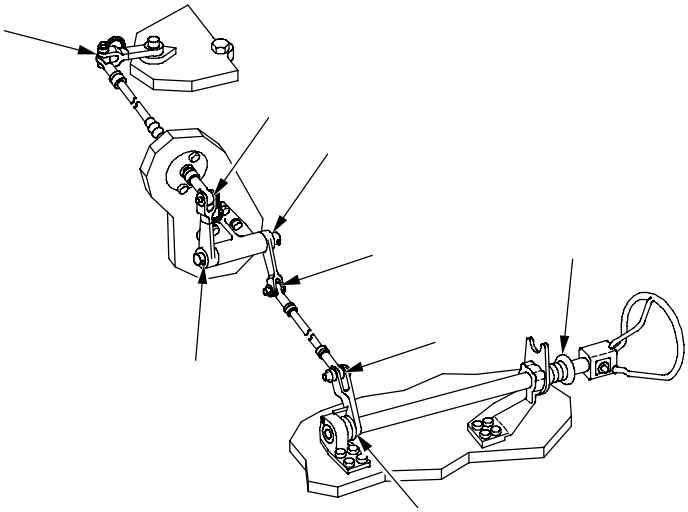

STEERING SHAFT BUSHING AND STEERING CONTROL LINKAGE

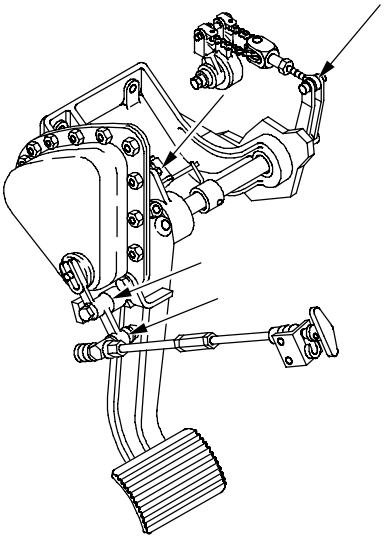

BRAKE CONTROL LINKAGE

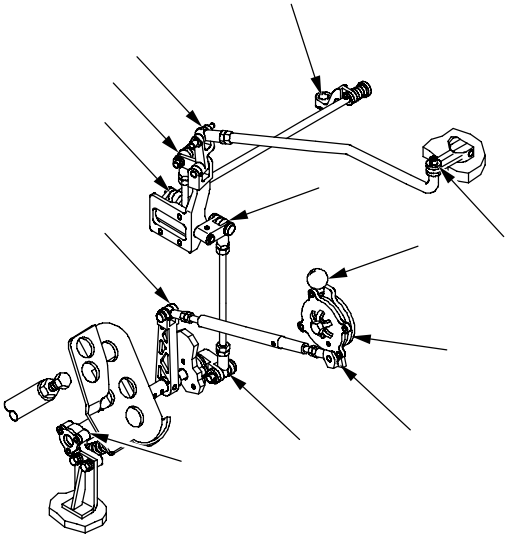

ACCELERATOR AND THROTTLE CONTROLS

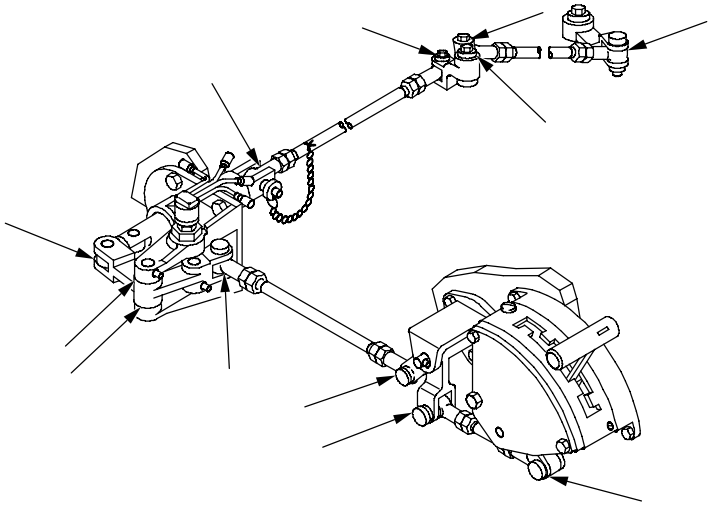

TRANSMISSION SHIFTING CONTROL LINKAGE

18ph080m

# APPENDIX J

## AFCS/PDFCS/BCS SPHEROID AND DATUM TABLE SPHEROID #1 - AUSTRALIAN NATIONAL SPHEROID

### NOTE

Selection of the datum to be used is performed from the setup and information displays (Enter AP/DATUM display).

Table #1 Australian National Spheroid (Spheroid 1)

| LOCAL GEODETIC DATUMS | | | TRANSFORMATION PARAMETERS** | | |
|---|---|---|---|---|---|
| **Local ID CODE** | **Local ID (Display)** | **DATUM** | **DELTA X** | **DELTA Y** | **DELTA Z** |
| | | Australian National Spheroid | | | |
| 1 | ANO | Anna 1 Astron 1965 | -491 | -22 | 435 |
| 2 | AUA | Australian Geodetic 1966 | -133 | -48 | 148 |
| 3 | AUG | Australian Geodetic 1984 | -134 | -48 | 149 |

Table #2 Bessel (Ethiopia) 1841 Spheroid (Spheroid 2)

| LOCAL GEODETIC DATUMS | | | TRANSFORMATION PARAMETERS** | | |
|---|---|---|---|---|---|
| **Local ID CODE** | **Local ID (Display)** | **DATUM** | **DELTA X** | **DELTA Y** | **DELTA Z** |
| | | Bessel 1841 (Ethiopia, Indonesia, Japan, and Korea) | | | |
| 4 | BUR | Bukit Rimpah | -384 | 664 | -48 |
| 5 | BAT | Djakarta (Batavia) | -377 | 681 | -50 |
| 6 | GSE | Gunung Segara | -403 | 684 | 41 |
| 7 | MAS | Massawa | 639 | 405 | 60 |
| 8 | TOY-M | Tokyo | -148 | 507 | 685 |

Table #3 Bessel (Nambia) 1841 Spheroid (Spheroid 3)

| LOCAL GEODETIC DATUMS | | | TRANSFORMATION PARAMETERS** | | |
|---|---|---|---|---|---|
| **Local ID CODE** | **Local ID (Display)** | **DATUM** | **DELTA X** | **DELTA Y** | **DELTA Z** |
| | | Bessel 1841 (Nambia) Spheroid | | | |
| 9 | SCK | Schwarzeck | 616 | 97 | -251 |

Table #4 Clarke 1866 Spheroid (Spheroid 4)

| LOCAL GEODETIC DATUMS | | | TRANSFORMATION PARAMETERS** | | |
|---|---|---|---|---|---|
| **Local ID CODE** | **Local ID (Display)** | **DATUM** | **DELTA X** | **DELTA Y** | **DELTA Z** |
| | | Clarke 1866 Spheroid | | | |
| 10 | BER | Bermuda 1957 | -73 | 213 | 296 |
| 11 | CAC | Cape Canaveral | -2 | 151 | 181 |
| 12 | GUA | Guam 1963 | -100 | -248 | 259 |
| 13 | LCF | L.C.5 Astro 1961 | 42 | 124 | 147 |
| 14 | LUZ-A | Luzon Philippines | -133 | -77 | -51 |
| 15 | LUZ-B | Luzon Mindano Island | -133 | -79 | -72 |
| | | North American 1927 | | | |
| 16 | NAS-C | (CONUS) | -8 | 160 | 176 |
| 17 | NAS-D | Alaska (Excluding Aleutian Islands) | -5 | 135 | 172 |
| 18 | NAS-O | Bahamas (Excluding San Salvador Island) | -4 | 154 | 178 |
| 19 | NAS-E | [Canada, Newfoundland] | -10 | 158 | 187 |
| 20 | NAS-Q | Canal Zone | 0 | 125 | 201 |
| 21 | NAS-P | Caribbean | -3 | 142 | 183 |
| 22 | NAS-N | Central America | 0 | 125 | 194 |
| 23 | NAS-U | Greenland (Hayes Peninsula) | 11 | 114 | 195 |
| 24 | NAS-L | Mexico | -12 | 130 | 190 |
| 25 | NAS-R | San Salvador Island | 1 | 140 | 165 |
| 26 | OHA-M | Old Hawaiian | 61 | -285 | -181 |
| 27 | PUR | Puerto Rico | 11 | 72 | -101 |

Table #5 Clarke 1880 Spheroid (Spheroid Code 5)

| LOCAL GEODETIC DATUMS | | | TRANSFORMATION PARAMETERS** | | |
|---|---|---|---|---|---|
| Local ID CODE | Local ID (Display) | DATUM | DELTA X | DELTA Y | DELTA Z |
| | | Clarke 1880 Spheroid | | | |
| | | Adindan | | | |
| 28 | ADI-M | [Ethiopia, Sudan] | -166 | -15 | 204 |
| 29 | ADI-E | Burkina Faso | -118 | -14 | 218 |
| 30 | ADI-F | Cameroon | -134 | -2 | 210 |
| 31 | ADI-C | Mali | -123 | -20 | 220 |
| 32 | ADI-D | Senegal | -128 | -18 | 224 |
| 33 | AIA | Antigua Island Astro 1943 | -270 | 13 | 62 |
| | | Arc 1950 | | | |
| 34 | ARF-M | [Botswana, Lesotho,Malawi, Swaziland, Zaire, Zambia, Zimbabwe] | -143 | -90 | -294 |
| 35 | ARF-H | Burundi | -153 | -5 | -292 |
| 36 | ARS | Arc 1960 | -160 | -6 | -302 |
| 37 | PHA | Ayabelle Lighthouse | -79 | -129 | 145 |
| 38 | CAP | Cape | -136 | -108 | -292 |
| 39 | CGE | Carthage | -263 | 6 | 431 |
| 40 | DAL | Dabola | -83 | 37 | 124 |
| 41 | FOT | Fort Thomas 1955 | -7 | 215 | 225 |
| 42 | LEH | Leigon | -130 | 29 | 364 |
| 43 | LIB | Liberia 1964 | -90 | 40 | 88 |
| 44 | MIK | Mahe 1971 | 41 | -220 | -134 |
| 45 | MER | Merchich | 31 | 146 | 47 |
| | | Minna | | | |
| 46 | MIN-A | Cameroon | -81 | -84 | 115 |
| 47 | MIN-B | Nigeria | -92 | -93 | 122 |
| 48 | ASM | Montserrat Island Astro 1958 | 174 | 359 | 365 |
| 49 | MPO | M'Poraloko | -74 | -130 | 42 |
| | | Nahrwan | | | |
| 50 | NAH-A | Masirah Island (Oman) | -247 | -148 | 369 |
| 51 | NAH-B | United Arab Emirates | -249 | -156 | 381 |
| 52 | NAH-C | Saudi Arabia | -243 | -192 | 477 |
| 53 | FAH | Oman | -346 | -1 | 224 |
| 54 | PTB | Point 58 | -106 | -129 | 165 |
| 55 | PTN | Point Noire 1948 | -148 | 51 | -291 |
| 56 | MVS | Viti Levu 1916 | 51 | 391 | -36 |

Table #6 Everest (Brunei and E. Malaysia) Spheroid (Spheroid Code 6)

| LOCAL GEODETIC DATUMS | | | TRANSFORMATION PARAMETERS** | | |
|---|---|---|---|---|---|
| **Local ID CODE** | **Local ID (Display)** | **DATUM** | **DELTA X** | **DELTA Y** | **DELTA Z** |
| | | Everest (Brunei and E Malaysia) Spheroid | | | |
| 57 | TIL | Timbalai 1948 | | | |
| | | Brunei and E. Malaysia | -679 | 669 | -48 |

Table #7 Everest (India 1830) Spheroid (Spheroid Code 7)

| LOCAL GEODETIC DATUMS | | | TRANSFORMATION PARAMETERS** | | |
|---|---|---|---|---|---|
| **Local ID CODE** | **Local ID (Display)** | **DATUM** | **DELTA X** | **DELTA Y** | **DELTA Z** |
| | | Everest (India 1830) Spheroid | | | |
| 58 | IND-B | Indian | | | |
| | | Bangladesh | 282 | 726 | 254 |
| 59 | INF-A | Indian 1954 | 218 | 816 | 297 |
| 60 | INH-A | Indian 1975 | 209 | 818 | 290 |
| 61 | KAN | Kandawala | -97 | 787 | 86 |

Table #8 Everest (India 1956) Spheroid (Spheroid Code 8)

| LOCAL GEODETIC DATUMS | | | TRANSFORMATION PARAMETERS** | | |
|---|---|---|---|---|---|
| **Local ID CODE** | **Local ID (Display)** | **DATUM** | **DELTA X** | **DELTA Y** | **DELTA Z** |
| | | Everest (India 1956) Spheroid | | | |
| 62 | IND-I | Indian | | | |
| | | India, Nepal | 295 | 736 | 257 |

Table #9 Everest (W. Malysia and Singapore) Spheroid (Spheroid Code 9)

| LOCAL GEODETIC DATUMS | | | TRANSFORMATION PARAMETERS** | | |
|---|---|---|---|---|---|
| **Local ID CODE** | **Local ID (Display)** | **DATUM** | **DELTA X** | **DELTA Y** | **DELTA Z** |
| | | Everest (W. Malysia and Singapore 1948) Spheroid | | | |
| 63 | KEA | Kertau 1948 | | | |
| | | W. Malaysia and Singapore | -11 | 851 | 5 |

Table #10 GRS 80 Spheroid (Spheroid Code A)

| LOCAL GEODETIC DATUMS | | | TRANSFORMATION PARAMETERS** | | |
|---|---|---|---|---|---|
| Local ID CODE | Local ID (Display) | DATUM | DELTA X | DELTA Y | DELTA Z |
| | | GRS 80 Spheroid | | | |
| 64 | NAR | North American 1983 | 0 | 0 | 0 |

Table #11 Helmert 1906 Spheroid (Spheroid Code B)

| LOCAL GEODETIC DATUMS | | | TRANSFORMATION PARAMETERS** | | |
|---|---|---|---|---|---|
| Local ID CODE | Local ID (Display) | DATUM | DELTA X | DELTA Y | DELTA Z |
| | | Helmert 1906 Spheroid | | | |
| 65 | OEG | Old Egyptian 1907 | -130 | 110 | -13 |

Table #12 Hough 1960 Spheroid (Spheroid Code C)

| LOCAL GEODETIC DATUMS | | | TRANSFORMATION PARAMETERS** | | |
|---|---|---|---|---|---|
| Local ID CODE | Local ID (Display) | DATUM | DELTA X | DELTA Y | DELTA Z |
| | | Hough 1960 Spheroid | | | |
| 66 | ENW | Wake-Eniwetok 1960 | 102 | 52 | -38 |

Table #13 International 1924 Spheroid (Spheroid Code D)

| LOCAL GEODETIC DATUMS | | | TRANSFORMATION PARAMETERS** | | | |
|---|---|---|---|---|---|---|
| Local ID CODE | Local ID (Display) | DATUM | DELTA X | DELTA Y | DELTA Z | |
| | | International 1924 Spheroid | | | | |
| | | Ain El ABD 1970 | | | | |
| 67 | AIN-A | Bahrain Island | -150 | -250 | -1 | |
| 68 | AIN-B | Saudi Arabia | -143 | -236 | 7 | |
| 69 | ASC | Ascension Island 1958 | -205 | 107 | 53 | |
| 70 | ATF | Astro Beacon “E” 1945 | 145 | 75 | -272 | |
| 71 | TRN | Astro/Tern Island (FRIG) 1961 | 114 | -116 | -333 | |
| 72 | SHB | Astro DOS 71/4 | -320 | 550 | -494 | |
| 73 | ASQ | Astronomical Station 1952 | 124 | -234 | -25 | |
| 74 | BID | Bissau | -173 | 253 | 27 | |
| 75 | IBE | Bellevue(IGN) | -127 | -769 | 472 | |
| 76 | BOO | Bogota Observatory | 307 | 304 | -318 | |
| 77 | CAZ | Camp Area Astro | -104 | -129 | 239 | |

| LOCAL GEODETIC DATUMS | | | TRANSFORMATION PARAMETERS** | | | |
|---|---|---|---|---|---|---|
| Local ID CODE | Local ID (Display) | DATUM | DELTA X | DELTA Y | DELTA Z | |
| 78 | CAI | Campo Inchauspe | -148 | 136 | 90 | |
| 79 | CAO | Canton Astro 1966 | 298 | -304 | -375 | |
| 80 | CHI | Chatham Island Astro 1971 | 175 | -38 | 113 | |
| 81 | CHU | Chua Astro | -134 | 229 | -29 | |
| 82 | COA | Corrego Alegre | -206 | 172 | -6 | |
| 83 | GIZ | DOS 1968 | 230 | -199 | -752 | |
| | | European 1950 | | | | |
| 84 | EAS | Easter Island 1967 | 211 | 147 | 111 | |
| 85 | EUR-M | [Austria, Belgium, Denmark, Finland, France, Federal Republic of Germany, Gibraltar, Greece, Italy, Luxembourg, Netherlands, Norway, Portugal, Spain, Sweden, Switzerland] | -87 | -98 | -121 | |
| 86 | EUR-K | [England, Ireland, Scotland Channel and Shetland Islands] | -86 | -96 | -120 | |
| 87 | EUR-S | [Iraq, Israel, Jordan, Kuwait, Lebanon, Saudi Arabia, Syria] | -103 | -106 | -141 | |
| 88 | EUR-E | Cyprus | -104 | -101 | -140 | |
| 89 | EUR-F | Egypt | -130 | -117 | -151 | |
| 90 | EUR-H | Iran | -117 | -132 | -164 | |
| 91 | EUR-L | Malta | -107 | -88 | -149 | |
| 92 | EUS | European 1979 | | | | |
| | | [Austria, Finland, Netherlands, Norway, Spain, Sweden, Switzerland] | -86 | -98 | -119 | |
| 93 | GAA | Gan 1970 | -133 | -321 | 50 | |
| 94 | GEO | Geodetic Datum 1949 | 84 | -22 | 209 | |
| 95 | GRA | Graciosa Base SW 1948 | -104 | 167 | -38 | |
| 96 | DOB | GUX 1 Astro | 252 | -209 | -751 | |
| 97 | HEN | Herat North | -333 | -222 | 114 | |
| 98 | HJO | Hjorsey 1955 | -73 | 46 | -86 | |
| 99 | HKD | Hong Kong 1963 | -156 | -271 | -189 | |
| 100 | HTN | Hu-Tzu-Shan | -637 | -549 | -203 | |
| 101 | ISG | ISTS 061 Astro 1968 | -794 | 119 | -298 | |
| 102 | IST | ISTS 073 Astro 1969 | 208 | -435 | -229 | |
| 103 | JOH | Johnston Island 1961 | 189 | -79 | -202 | |
| 104 | KEG | Kerguelen Island 1949 | 145 | -187 | 103 | |
| 105 | KUS | Kusaie Astro 1951 | 647 | 1777 | -1124 | |
| 106 | MID | Midway Astro 1961 | 912 | -58 | 1227 | |

| LOCAL GEODETIC DATUMS | | | TRANSFORMATION PARAMETERS** | | | |
|---|---|---|---|---|---|---|
| Local ID CODE | Local ID (Display) | DATUM | DELTA X | DELTA Y | DELTA Z | |
| 107 | NAP | Naparima, BWI | -10 | 375 | 165 | |
| 108 | FLO | Observatorio Meteorologico 1939 | 425 | -169 | 81 | |
| 109 | PLN | Pico de las Nieves | -307 | -92 | 127 | |
| 110 | PIT | Pitcairn Astro 1967 | 185 | 165 | 42 | |
| 111 | POS | Porto Santo 1936 | -499 | -249 | 314 | |
| 112 | PRP-M | Provisional South American 1956 | -288 | 175 | -376 | |
| 113 | HIT3 | Provisional South Chilean 1963 | 16 | 196 | 93 | |
| 114 | QAT | Qatar National | -128 | -283 | 22 | |
| 115 | QUO | Qornoq | 164 | 138 | -189 | |
| 116 | REU | Reunion | 94 | -948 | -1262 | |
| 117 | MOD | Rome 1940 | -225 | -65 | 9 | |
| 118 | SAO | Sao Braz | -203 | 141 | 53 | |
| 119 | SAE | Santo (DOS) 1965 | 170 | 42 | 84 | |
| 120 | SAP | Sapper Hill 1943 | -355 | 21 | 72 | |
| 121 | SGM | Selvagem Grande 1938 | -289 | -124 | 60 | |
| 122 | TAN | Tananarive Observatory 1925 | -189 | -242 | -91 | |
| 123 | TDC | Tristan Astro 1968 | -632 | 438 | -609 | |
| 124 | WAK | Wake Island Astro 1952 | 276 | -57 | 149 | |
| 125 | YAC | Yacare | -155 | 171 | 37 | |
| 126 | ZAN | Zanderij | -265 | 120 | -358 | |

Table #14 Krassovsky 1940 Spheroid (Spheroid Code E)

| LOCAL GEODETIC DATUMS | | | TRANSFORMATION PARAMETERS** | | |
|---|---|---|---|---|---|
| Local ID CODE | Local ID (Display) | DATUM | DELTA X | DELTA Y | DELTA Z |
| | | Krassovsky 1940 Spheroid | | | |
| 127 | AFG | Afgooye | -43 | -163 | 45 |

Table #15 Modified Fischer 1960 Spheroid (Spheroid Code F)

| LOCAL GEODETIC DATUMS | | | TRANSFORMATION PARAMETERS** | | |
|---|---|---|---|---|---|
| Local ID CODE | Local ID (Display) | DATUM | DELTA X | DELTA Y | DELTA Z |
| | | Modified Fischer 1960 Spheroid | | | |
| 128 | SOA | South Asia | 7 | -10 | -26 |

Table #16 South American 1969 Spheroid (Spheroid Code G)

| LOCAL GEODETIC DATUMS | | | TRANSFORMATION PARAMETERS** | | |
|---|---|---|---|---|---|
| **Local ID CODE** | **Local ID (Display)** | **DATUM** | **DELTA X** | **DELTA Y** | **DELTA Z** |
| | | South American 1969 Spheroid | | | |
| 129 | SAN-M | South American 1969 | -57 | 1 | -41 |

Table #17 WGS 72 Spheroid (Spheroid Code H)

| LOCAL GEODETIC DATUMS | | | TRANSFORMATION PARAMETERS** | | |
|---|---|---|---|---|---|
| **Local ID CODE** | **Local ID (Display)** | **DATUM** | **DELTA X** | **DELTA Y** | **DELTA Z** |
| | | WGS 72 Spheroid | | | |
| 130 | WD | WGS 72 | 0 | 0 | 0 |

Table #18 WGS 84 Spheroid (Spheroid Code I)

| LOCAL GEODETIC DATUMS | | | TRANSFORMATION PARAMETERS** | | |
|---|---|---|---|---|---|
| **Local ID CODE** | **Local ID (Display)** | **DATUM** | **DELTA X** | **DELTA Y** | **DELTA Z** |
| | | WGS 84 Spheroid | | | |
| 131 | WE | WGS 84 | 0 | 0 | 0 |

# APPENDIX J.1

## AFCS/PDFCS/FDC SPHEROID AND DATUM TABLE FOR VERSION 7 AND 7P AND VERSION 2 AND 2P

### NOTE

Selection of the datum to be used is performed from the setup and information displays (Enter SPHERIOD/DATUM display).

Table #1 Australian National Spheroid (Spheroid AN)

| LOCAL GEODETIC DATUMS | | TRANSFORMATION PARAMETERS** | | |
|---|---|---|---|---|
| **Local ID (Display)** | **DATUM** | **DELTA X** | **DELTA Y** | **DELTA Z** |
| | Australian National Spheroid | | | |
| ANO | Anna 1 Astron 1965 | -491 | -22 | 435 |
| AUA | Australian Geodetic 1966 | -133 | -48 | 148 |
| AUG | Australian Geodetic 1984 | -134 | -48 | 149 |

Table #2 Bessel (Ethiopia) 1841 Spheroid (Spheroid BR)

| LOCAL GEODETIC DATUMS | | TRANSFORMATION PARAMETERS** | | |
|---|---|---|---|---|
| **Local ID (Display)** | **DATUM** | **DELTA X** | **DELTA Y** | **DELTA Z** |
| | Bessel 1841 (Ethiopia, Indonesia, Japan, and Korea) | | | |
| BUR | Bukit Rimpah | -384 | 664 | -48 |
| BAT | Djakarta (Batavia) | -377 | 681 | -50 |
| GSE | Gunung Segara | -403 | 684 | 41 |
| MAS | Massawa | 639 | 405 | 60 |
| TOY-M | Tokyo | -148 | 507 | 685 |

Table #3 Bessel (Nambia) 1841 Spheroid (Spheroid BN)

| LOCAL GEODETIC DATUMS | | TRANSFORMATION PARAMETERS** | | |
|---|---|---|---|---|
| **Local ID (Display)** | **DATUM** | **DELTA X** | **DELTA Y** | **DELTA Z** |
| | Bessel 1841 (Nambia) Spheroid | | | |
| SCK | Schwarzeck | 616 | 97 | -251 |

Table #4 Clarke 1866 Spheroid (Spheroid CC)

| LOCAL GEODETIC DATUMS | | TRANSFORMATION PARAMETERS** | | |
|---|---|---|---|---|
| **Local ID (Display)** | **DATUM** | **DELTA X** | **DELTA Y** | **DELTA Z** |
| | Clarke 1866 Spheroid | | | |
| BER | Bermuda 1957 | -73 | 213 | 296 |
| CAC | Cape Canaveral | -2 | 151 | 181 |
| GUA | Guam 1963 | -100 | -248 | 259 |
| LCF | L.C.5 Astro 1961 | 42 | 124 | 147 |
| LUZ-A | Luzon Philippines | -133 | -77 | -51 |
| LUZ-B | Luzon Mindano Island | -133 | -79 | -72 |
| | North American 1927 | | | |
| NAS-C | (CONUS) | -8 | 160 | 176 |
| NAS-D | Alaska (Excluding Aleutian Islands) | -5 | 135 | 172 |
| NAS-Q | Bahamas (Excluding San Salvador Island) | -4 | 154 | 178 |
| NAS-E | [Canada, Newfoundland] | -10 | 158 | 187 |
| NAS-O | Canal Zone | 0 | 125 | 201 |
| NAS-P | Caribbean | -3 | 142 | 183 |
| NAS-N | Central America | 0 | 125 | 194 |
| NAS-U | Greenland (Hayes Peninsula) | 11 | 114 | 195 |
| NAS-L | Mexico | -12 | 130 | 190 |
| NAS-R | San Salvador Island | 1 | 140 | 165 |
| OHA-M | Old Hawaiian | 61 | -285 | -181 |
| PUR | Puerto Rico | 11 | 72 | -101 |

Table #5 Clarke 1880 Spheroid (Spheroid Code CD)

| LOCAL GEODETIC DATUMS | | TRANSFORMATION PARAMETERS** | | |
|---|---|---|---|---|
| **Local ID (Display)** | **DATUM** | **DELTA X** | **DELTA Y** | **DELTA Z** |
| | Clarke 1880 Spheroid | | | |
| | Adindan | | | |
| ADI-M | [Ethiopia, Sudan] | -166 | -15 | 204 |
| ADI-E | Burkina Faso | -118 | -14 | 218 |
| ADI-F | Cameroon | -134 | -2 | 210 |
| ADI-C | Mali | -123 | -20 | 220 |
| ADI-D | Senegal | -128 | -18 | 224 |
| AIA | Antigua Island Astro 1943 | -270 | 13 | 62 |
| | Arc 1950 | | | |
| ARF-M | [Botswana, Lesotho,Malawi, Swaziland, Zaire, Zambia, Zimbabwe] | -143 | -90 | -294 |
| ARF-H | Burundi | -153 | -5 | -292 |
| ARS | Arc 1960 | -160 | -6 | -302 |
| PHA | Ayabelle Lighthouse | -79 | -129 | 145 |
| CAP | Cape | -136 | -108 | -292 |
| CGE | Carthage | -263 | 6 | 431 |
| DAL | Dabola | -83 | 37 | 124 |
| FOT | Fort Thomas 1955 | -7 | 215 | 225 |
| LEH | Leigon | -130 | 29 | 364 |
| LIB | Liberia 1964 | -90 | 40 | 88 |
| MIK | Mahe 1971 | 41 | -220 | -134 |
| MER | Merchich | 31 | 146 | 47 |
| | Minna | | | |
| MIN-A | Cameroon | -81 | -84 | 115 |
| MIN-B | Nigeria | -92 | -93 | 122 |
| ASM | Montserrat Island Astro 1958 | 174 | 359 | 365 |
| MPO | M'Poraloko | -74 | -130 | 42 |
| | Nahrwan | | | |
| NAH-A | Masirah Island (Oman) | -247 | -148 | 369 |
| NAH-B | United Arab Emirates | -249 | -156 | 381 |
| NAH-C | Saudi Arabia | -243 | -192 | 477 |
| FAH | Oman | -346 | -1 | 224 |
| PTB | Point 58 | -106 | -129 | 165 |
| PTN | Point Noire 1948 | -148 | 51 | -291 |
| MVS | Viti Levu 1916 | 51 | 391 | -36 |

Table #6 Everest (Brunei and E. Malaysia) Spheroid (Spheroid Code EB)

| LOCAL GEODETIC DATUMS | | TRANSFORMATION PARAMETERS** | | |
|---|---|---|---|---|
| **Local ID (Display)** | **DATUM** | **DELTA X** | **DELTA Y** | **DELTA Z** |
| | Everest (Brunei and E Malaysia) Spheroid | | | |
| TIL | Timbalai 1948 | | | |
| | Brunei and E. Malaysia | -679 | 669 | -48 |

Table #7 Everest (India 1830) Spheroid (Spheroid Code EA)

| LOCAL GEODETIC DATUMS | | TRANSFORMATION PARAMETERS** | | |
|---|---|---|---|---|
| **Local ID (Display)** | **DATUM** | **DELTA X** | **DELTA Y** | **DELTA Z** |
| | Everest (India 1830) Spheroid | | | |
| IND-B | Indian | | | |
| | Bangladesh | 282 | 726 | 254 |
| INF-A | Indian 1954 | 218 | 816 | 297 |
| INH-A | Indian 1975 | 209 | 818 | 290 |
| KAN | Kandawala | -97 | 787 | 86 |

Table #8 Everest (India 1956) Spheroid (Spheroid Code EC)

| LOCAL GEODETIC DATUMS | | TRANSFORMATION PARAMETERS** | | |
|---|---|---|---|---|
| **Local ID (Display)** | **DATUM** | **DELTA X** | **DELTA Y** | **DELTA Z** |
| | Everest (India 1956) Spheroid | | | |
| IND-I | Indian | | | |
| | India, Nepal | 295 | 736 | 257 |

Table #9 Everest (W. Malysia and Singapore) Spheroid (Spheroid Code EE)

| LOCAL GEODETIC DATUMS | | TRANSFORMATION PARAMETERS** | | |
|---|---|---|---|---|
| **Local ID (Display)** | **DATUM** | **DELTA X** | **DELTA Y** | **DELTA Z** |
| | Everest (W. Malysia and Singapore 1948) Spheroid | | | |
| KEA | Kertau 1948 | | | |
| | W. Malaysia and Singapore | -11 | 851 | 5 |

Table #10 GRS 80 Spheroid (Spheroid Code RF)

| LOCAL GEODETIC DATUMS | | TRANSFORMATION PARAMETERS** | | |
|---|---|---|---|---|
| **Local ID (Display)** | **DATUM** | **DELTA X** | **DELTA Y** | **DELTA Z** |
| | GRS 80 Spheroid | | | |
| NAR | North American 1983 | 0 | 0 | 0 |

Table #11 Helmert 1906 Spheroid (Spheroid Code HE)

| LOCAL GEODETIC DATUMS | | TRANSFORMATION PARAMETERS** | | |
|---|---|---|---|---|
| **Local ID (Display)** | **DATUM** | **DELTA X** | **DELTA Y** | **DELTA Z** |
| | Helmert 1906 Spheroid | | | |
| OEG | Old Egyptian 1907 | -130 | 110 | -13 |

Table #12 Hough 1960 Spheroid (Spheroid Code HO)

| LOCAL GEODETIC DATUMS | | TRANSFORMATION PARAMETERS** | | |
|---|---|---|---|---|
| **Local ID (Display)** | **DATUM** | **DELTA X** | **DELTA Y** | **DELTA Z** |
| | Hough 1960 Spheroid | | | |
| ENW | Wake-Eniwetok 1960 | 102 | 52 | -38 |

Table #13 International 1924 Spheroid (Spheroid Code IN)

| LOCAL GEODETIC DATUMS | | TRANSFORMATION PARAMETERS** | | |
|---|---|---|---|---|
| **Local ID (Display)** | **DATUM** | **DELTA X** | **DELTA Y** | **DELTA Z** |
| | International 1924 Spheroid | | | |
| | Ain El ABD 1970 | | | |
| AIN-A | Bahrain Island | -150 | -250 | -1 |
| AIN-B | Saudi Arabia | -143 | -236 | 7 |
| ASC | Ascension Island 1958 | -205 | 107 | 53 |
| ATF | Astro Beacon “E” 1945 | 145 | 75 | -272 |
| TRN | Astro/Tern Island (FRIG) 1961 | 114 | -116 | -333 |
| SHB | Astro DOS 71/4 | -320 | 550 | -494 |
| ASQ | Astronomical Station 1952 | 124 | -234 | -25 |
| BID | Bissau | -173 | 253 | 27 |
| IBE | Bellevue(IGN) | -127 | -769 | 472 |
| BOO | Bogota Observatory | 307 | 304 | -318 |
| CAZ | Camp Area Astro | -104 | -129 | 239 |

| LOCAL GEODETIC DATUMS | | TRANSFORMATION PARAMETERS** | | |
|---|---|---|---|---|
| Local ID (Display) | DATUM | DELTA X | DELTA Y | DELTA Z |
| CAI | Campo Inchauspe | -148 | 136 | 90 |
| CAO | Canton Astro 1966 | 298 | -304 | -375 |
| CHI | Chatham Island Astro 1971 | 175 | -38 | 113 |
| CHU | Chua Astro | -134 | 229 | -29 |
| COA | Corrego Alegre | -206 | 172 | -6 |
| GIZ | DOS 1968 | 230 | -199 | -752 |
| | European 1950 | | | |
| EAS | Easter Island 1967 | 211 | 147 | 111 |
| EUR-M | [Austria, Belgium, Denmark, Finland, France, Federal Republic of Germany, Gibraltar, Greece, Italy, Luxembourg, Netherlands, Norway, Portugal, Spain, Sweden, Switzerland] | -87 | -98 | -121 |
| EUR-K | [England, Ireland, Scotland Channel and Shetland Islands] | -86 | -96 | -120 |
| EUR-S | [Iraq, Israel, Jordan, Kuwait, Lebanon, Saudi Arabia, Syria] | -103 | -106 | -141 |
| EUR-E | Cyprus | -104 | -101 | -140 |
| EUR-F | Egypt | -130 | -117 | -151 |
| EUR-H | Iran | -117 | -132 | -164 |
| EUR-L | Malta | -107 | -88 | -149 |
| EUS | European 1979 | | | |
| | [Austria, Finland, Netherlands, Norway, Spain, Sweden, Switzerland] | -86 | -98 | -119 |
| GAA | Gan 1970 | -133 | -321 | 50 |
| GEO | Geodetic Datum 1949 | 84 | -22 | 209 |
| GRA | Graciosa Base SW 1948 | -104 | 167 | -38 |
| DOB | GUX 1 Astro | 252 | -209 | -751 |
| HEN | Herat North | -333 | -222 | 114 |
| HJO | Hjorsey 1955 | -73 | 46 | -86 |
| HKD | Hong Kong 1963 | -156 | -271 | -189 |
| HTN | Hu-Tzu-Shan | -637 | -549 | -203 |
| ISG | ISTS 061 Astro 1968 | -794 | 119 | -298 |
| IST | ISTS 073 Astro 1969 | 208 | -435 | -229 |
| JOH | Johnston Island 1961 | 189 | -79 | -202 |
| KEG | Kerguelen Island 1949 | 145 | -187 | 103 |
| KUS | Kusaie Astro 1951 | 647 | 1777 | -1124 |
| MID | Midway Astro 1961 | 912 | -58 | 1227 |

| LOCAL GEODETIC DATUMS | | TRANSFORMATION PARAMETERS** | | |
|---|---|---|---|---|
| **Local ID (Display)** | **DATUM** | **DELTA X** | **DELTA Y** | **DELTA Z** |
| NAP | Naparima, BWI | -10 | 375 | 165 |
| FLO | Observatorio Meteorologico 1939 | 425 | -169 | 81 |
| PLN | Pico de las Nieves | -307 | -92 | 127 |
| PIT | Pitcairn Astro 1967 | 185 | 165 | 42 |
| POS | Porto Santo 1936 | -499 | -249 | 314 |
| PRP-M | Provisional South American 1956 | -288 | 175 | -376 |
| HIT3 | Provisional South Chilean 1963 | 16 | 196 | 93 |
| QAT | Qatar National | -128 | -283 | 22 |
| QUO | Qornoq | 164 | 138 | -189 |
| REU | Reunion | 94 | -948 | -1262 |
| MOD | Rome 1940 | -225 | -65 | 9 |
| SAO | Sao Braz | -203 | 141 | 53 |
| SAE | Santo (DOS) 1965 | 170 | 42 | 84 |
| SAP | Sapper Hill 1943 | -355 | 21 | 72 |
| SGM | Selvagem Grande 1938 | -289 | -124 | 60 |
| TAN | Tananarive Observatory 1925 | -189 | -242 | -91 |
| TDC | Tristan Astro 1968 | -632 | 438 | -609 |
| WAK | Wake Island Astro 1952 | 276 | -57 | 149 |
| YAC | Yacare | -155 | 171 | 37 |
| ZAN | Zanderij | -265 | 120 | -358 |

Table #14 Krassovsky 1940 Spheroid (Spheroid Code KA)

| LOCAL GEODETIC DATUMS | | TRANSFORMATION PARAMETERS** | | |
|---|---|---|---|---|
| **Local ID (Display)** | **DATUM** | **DELTA X** | **DELTA Y** | **DELTA Z** |
| | Krassovsky 1940 Spheroid | | | |
| AFG | Afgooye | -43 | -163 | 45 |

Table #15 Modified Fischer 1960 Spheroid (Spheroid Code AM)

| LOCAL GEODETIC DATUMS | | TRANSFORMATION PARAMETERS** | | |
|---|---|---|---|---|
| **Local ID (Display)** | **DATUM** | **DELTA X** | **DELTA Y** | **DELTA Z** |
| | Modified Fischer 1960 Spheroid | | | |
| SOA | South Asia | 7 | -10 | -26 |

Table #16 South American 1969 Spheroid (Spheroid Code SA)

| LOCAL GEODETIC DATUMS | | TRANSFORMATION PARAMETERS** | | |
|---|---|---|---|---|
| **Local ID (Display)** | **DATUM** | **DELTA X** | **DELTA Y** | **DELTA Z** |
| | South American 1969 Spheroid | | | |
| SAN-M | South American 1969 | -57 | 1 | -41 |

Table #17 WGS 72 Spheroid (Spheroid Code WD)

| LOCAL GEODETIC DATUMS | | TRANSFORMATION PARAMETERS** | | |
|---|---|---|---|---|
| **Local ID (Display)** | **DATUM** | **DELTA X** | **DELTA Y** | **DELTA Z** |
| | WGS 72 Spheroid | | | |
| WD | WGS 72 | 0 | 0 | 0 |

Table #18 WGS 84 Spheroid (Spheroid Code WE)

| LOCAL GEODETIC DATUMS | | TRANSFORMATION PARAMETERS** | | |
|---|---|---|---|---|
| **Local ID (Display)** | **DATUM** | **DELTA X** | **DELTA Y** | **DELTA Z** |
| | WGS 84 Spheroid | | | |
| WE | WGS 84 | 0 | 0 | 0 |

# APPENDIX K

# M93 CHRONOGRAPH MUZZLE VELOCITY SYSTEM (MVS)

## K-1 SCOPE.

This appendix describes the M93 MVS, procedures and actions that must be taken by COS POC, equipment performance and other important information for the operation of this system. Additional information can be found in FM 6-70.

## K-2 PLATOON LEADERSHIP ACTIONS.

The following is a checklist (Table K-1) that assists the platoon leadership in obtaining MVs. It is imperative that each of the steps be followed to allow for greater probability of obtaining usable MVs whether at a dedicated calibration site or updating MVVs during a live fire exercise

**Table K-1. Muzzle Velocity Checklist**

| PLATOON | GUN 1 | GUN 2 | GUN 3 |
|---|---|---|---|
| M93 CONNECTED (PRIOR TO POWER UP) | | | |
| NAV POSITION UPDATE (VERIFY PLGR FIGURE OF MERIT 1) | | | |
| ROUNDS, FUZES (BCS PROVIDES), VERIFY | | | |
| POWDER TEMPERATURE | | | |
| MVV ROUNDS (1-9) (UNIT TSOP) | | | |
| SELECT AFCS STATUS AND ENSURE MVS IS OPERATIONAL | | | |
| BORESIGHT ENTRY | | | |
| VERIFICATION MISSION | | | |

## K-3 RESPONSIBILITIES.

The POC's main responsibility during the operation of the M93 is to verify and record all information reported from the AFCS. The POC will verify that communication is established by requesting MVVs from the AFCS. There are different methods for obtaining MVVs from the AFCS. The POC FDC chief and/or FDO must decide the preferred method:

### K-3.1 Initial Calibration (No previous MVVs recorded).

Ensure MVVs are deleted from the AFCS. Gun must delete by date time group, projectile, and propellant lot. POC will request MVVs from howitzer to verify deletion. Delete MVVs in POC database.

**NOTE**

To ensure that the AFCS has no MVVs, the POC can send an MVV table to the AFCS with a non-existing shell/fuze combination set with an MVV reading of 0.0. A blank table cannot be sent to the AFCS. (There must be at least one entry in the MVV table.)

## K-3 POC RESPONSIBILITIES - Continued

### K-3.2 Previous MVVs Already Recorded and Desired Lot to Measure has no MVV.

Verify previous MVVs on AFCS and BCS with recorded historical data. Verify lot has no previous MVV in AFCS and LCU database on AFCS ammunition entered.

### K-3.3 Previous MVVs Already Recorded and Desired Lot to Measure has Previous MVV.

Verify previous MVVs on AFCS and BCS with recorded historical data.

**NOTE**

A new MVV will not be generated unless there is a change of +/- 2.0 meters per second from recorded MVV.

The POC will then send BCS provided AMMO (if not already done). Once AFCS has received the AMMO and the operator has had time to execute, the POC will request AMMO to verify it has been received. The POC will then verify that the AFCS has extended lot designators and the MVS round count has been set to appropriate setting. The POC is now ready to send a mission with the appropriate round count.

Upon EOM the AFCS will send an MVV as long as certain requirements are met:

- AFCS calculates a new MVV.
- Change in +/- 2.0 meters per second from previously recorded MVV.

Once the AFCS receives an acknowledgement from the BCS, the MVV will be stored. If there is no acknowledgement from the BCS the MVV will not be stored on the AFCS. Once the BCS receives the MVV in the INPUT queue, the MVV should be displayed and verified by the FDC chief and FDO. Once the MVV has been verified the LCU operator will execute the MVV and the FDO will record it. The POC will request the MVV from the AFCS to verify proper MVV and will conduct a verification mission.

**NOTE**

An MVV that is stored on the AFCS will be applied to other MVVs from 3 charges up to 3 charges down, as long as there are no MVVs for that shell/propellant combination. (e.g., If charge 6W HEA has recorded MVVs and a charge 5WB HEA is being shot with no MVVs, the AFCS will apply the charge 6WB to the 5WB to get the most accurate data. If all requirements are met with the MVS an MVV for the 5WB should be generated and sent to the POC.)

The POC M93 operation checklist is provided at Table K-2. For troubleshooting procedures for faults found, refer to Table K-3.

## K-3 POC RESPONSIBILITIES - Continued

### Table K-2. POC M93 Operation Checklist

| PROCEDURE | COMPLETED |
|---|---|
| VERIFY COMMUNICATIONS | |
| VERIFY MVVs ON AFCS AND BCS DATABASE ARE CURRENT | |
| SEND BCS PROVIDED TO AFCS | |
| VERIFY EXTENDED LOT DESIGNATORS IN AFCS | |
| VERIFY MVS ROUND COUNT IN AFCS BY VOICE | |
| SEND MISSION WITH APPROPRIATE ROUND COUNT | |
| VERIFY MVV RECEIVED FROM AFCS (FDC CHIEF AND FDO) | |
| PROCESS MVV (EXECUTE) | |
| RECORD MVV | |
| VERIFICATION MISSION | |

### Table K-3. POC M93 Operation Troubleshooting Procedures

| | |
|---|---|
| VERIFY COMMUNICATIONS | Verify initialization parameters in AFCS and LCU database. Verify radio frequencies and setting. Try voice on digital radio. |
| VERIFY MVVs IN DATABASE IN AFCS AND LCU | Verify that all MVVs are current from previously recorded MVVs (MVV book). |
| SEND BCS PROVIDED TO AFCS | Verify lots sent to gun are correct and match ammunition inventory. |
| VERIFY EXTENDED LOT DESIGNATORS IN AFCS | Request MVVs from AFCS and verify extended lot designators. |
| VERIFY MVS ROUND COUNT IN AFCS | Make sure that MVS round count is equal to or greater than the mission fired count. |
| SEND MISSION WITH APPROPRIATE ROUND COUNT | If mission does not have appropriate rounds an MVV will not be generated. |
| VERIFY MVV RECEIVED FROM AFCS (FDC CHIEF AND FDO) | Verify that MVV received is accurate. If the MVV is invalid, then delete the MVV by propellant lot from the AFCS. |
| RECORD MVV | The battalion and batteries should keep a detailed record of all MVVs for each weapon. |

## K-4 EQUIPMENT PERFORMANCE.

Velocity Measuring Range: . . . . . 150 – 1500 meters/second

Caliber Range: . . . . . 40 mm and up

Projectile Types: . . . . . Conventional, base-bleed, sabot-discarding. rocket-assisted, tracer ammunition, deep cavity

Accuracy: . . . . . Within 0.05% of the true muzzle velocity

Precision: . . . . . 0.1 m/s

Firing Rate: . . . . . 16 round per minute maximum

Firing Detection: . . . . . Automatic triggering

Measuring (Transmitting) Duration: . . . . . 500 msec

MV Calculation Duration: . . . . . 3.25 sec maximum

Flank Firing: . . . . . No mutual interferences when two systems operate on parallel guns, 30 meters

**Transceiver**

Transmitted Frequency: . . . . . 10,525 ± 1 MHz

Transmitted Power: . . . . . 120 to 240 mW

**Antenna**

Type: . . . . . Microstrip

Gain: . . . . . 22 db minimum

Side Lobe Level: . . . . . -12 db minimum below main lobe

**Beamwidth:** . . . . . E-PLANE: 15° ± 2°
. . . . . H-PLANE: 7° ± 2°

Cross Polarization: . . . . . -24 db maximum

Squint Angle: . . . . . E-PLANE 0 ± 1°
. . . . . H-PLANE: 7° ± 1°

## K-5 PHYSICAL CHARACTERISTICS.

**Transceiver**

Size (H x W x D): . . . . . 12 x 8.4 x 3.8 inch
. . . . . (304 x 214 x 96 mm)

Weight: . . . . . 14.5 lb (6.6 Kg)

**Mounting Bracket**

Size (H x W x D): . . . . . 8.3 x 7.4 x 6.6 inch
. . . . . (210 x 187 x 167 mm)

Weight: . . . . . 7.9 lb (3.6 Kg)

## K-6 POWER REQUIREMENTS.

Operating Voltage: . . . . . 18-30 VDC

Power Consumption: . . . . . 15 W in standby mode; 24 N
. . . . . in measure mode.

## K-7 MUZZLE VELOCITY MEASUREMENT AND CALCULATION.

The MVP starts the Doppler sampling process when triggered by a signal received from the transceiver. This instant is referred as t = 0. The Doppler signal is then processed to obtain the projectile's velocity at several predefined instances. The requested MV is obviously V(t=0). This value can be calculated by finding the best-fit linear regression curve of the form:

$$V(t) = at + b$$

Where:

| | | |
|---|---|---|
| t | - | Time in seconds |
| V(t) | - | Instantaneous velocity |
| a,b | - | Linear regression constants |

## K-8 RF SECTION.

The RF section consists of an antenna and a transceiver. The transceiver consists of an extremely stable oscillator, circulator, and mixer. The RF system transmits a low-power, continuous microwave (X band) signal and receives Doppler-shifted echoes. The detected frequency difference between the transmitted and received frequencies is proportional to the projectile velocity.

## K-9 DOPPLER AMPLIFIER.

The Doppler amplifier consists of an amplifier with a bandwidth of 3-140 kHz. The input of the Doppler amplifier is the RF system output which is filtered, amplified, shaped, and transmitted through a differential line driver to the muzzle velocity processor.

## K-10 MUZZLE VELOCITY PROCESSOR (MVP).

The MVP is based on the ADSP-2100 Digital Signal Processor. The MVP circuits and parameters are as follows:

a. 32 K x 24 fast EPROM

b. 32 K x 16 fast RAM

c. Clock and timing generation circuits

d. Doppler signal input circuits

e. Measure control circuits

f. Automatic fire detection circuit

g. MIL-STD-1553 interface

## K-11 ADSP-2100 DIGITAL SIGNAL PROCESSOR (DSP).

The circuits and parameters are as follows:

a. 32-MHz clock

b. 24-bit program bus

c. 16-bit data bus

d. Multiply and accumulate instructions

e. Instructions performed in 125 nsec

### K-11.1 Program Memory.

The program memory consists of 32 K x 24-bit words of high-speed EPROM. The EPROM components are on-board programmable.

### K-11.2 Work Memory.

The work memory consists of 32 K x 16-bit, high-speed RAM and serves as the sampling and processing work space.

### K-11.3 Transceiver Interface.

The transceiver interface consists of several circuits which enable an interface between the module and the transceiver. These circuits consist of:

a. An X band interface which amplifies and reshapes the Doppler signal received from the X band receiver.

b. A precise synthetic Doppler frequency generated for self test purposes.

c. A trigger circuit for defining the instant of firing and activating the Transceiver.

d. A signal select circuit which transfers the required inputs for sampling and processing.

### K-11.4 Clock Generator, Wait State, and Timing Circuits.

These circuits provide all the necessary system clock, wait states, and other timing such as sampling rate for Doppler signal and baud rate for serial communications.

## K-10 ADSP-2100 DIGITAL SIGNAL PROCESSOR (DSP) - Continued

### K-11.5 Power Control and Failure Circuit.

This circuit provides the required reset and power failure signals. The power failure signal is used to protect the data base memory from being mistakenly overwritten during power on/off or failure. This circuit provides the system the ability to operate properly upon input power disturbances (power decrease under 18 VDC) caused by start up of other equipment. This is provided by a capacitor which supplies the power to the work memory (RAM) for the period of the power disturbance. The system current mode of operation is stored in that memory. The processor checks that mode and continues operation from the condition it was before the power disturbance occurred. If the power disturbance lasts longer than 3.5 seconds, the M93 MVS resumes operation as if initially powered-up.

### K-11.6 Discrete I/O.

Several discrete inputs/outputs are provided for general use.

### K-11.7 Address Decoder.

The address decoder decodes the various MVP module component addresses when a read/write operation to them is required.

### K-11.8 MIL-STD-1553B Interface.

The MIL-STD-1553B Interface is implemented using a chip set which is based on the Aeroflex C12577-10-QM-P119 chip and associated circuitry. The chip is capable of functioning as a remote terminal (RT) and contains dual low-power transceivers and encoder/decoders, complete BC/RT protocol logic, 4 K x 16 shared static RAM and a direct buffered interface to the host processor bus. The CT2577-10-QM-P119 in the RT mode is able to be addressed within the address range 00001 through 11110 by using the RTADO-RTAD4 and RTADP lines.

### K-11.9 Automatic Fire Detection Circuit.

The MVP contains an acceleration switch, which detects the instant of gun firing and provides the command to start the measuring process (to start RF transmission and signal sampling).

## K-12 PACKING AND SHIPPING M93 UNITS AND PARTS.

a. Verify that connector dust cap is securely fastened.

b. Wrap unit with antistatic bubble sheets. Place extra bubble sheets on radar antenna transceiver face.

c. Place unit in suitable, firm carton or box.

d. Pad well with soft packing material. Verify that item will remain secure during shipment.

e. Fill carton with packing material.

f. Seal carton.

g. The unit is now ready for shipping.

## K-13 CLEANING.

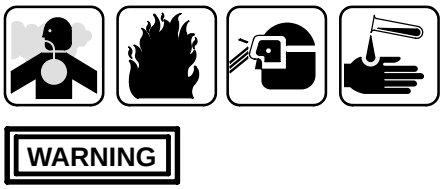


Use solvent in a well-ventilated area. Avoid breathing vapors. Keep away from flame.

**NOTE**

Normally, the M93 MVS will not require cleaning of any internal parts because it is sealed against dirt and moisture.

a. Clean M93 MVS units with a clean, lint-free cloth moistened with alcohol. Cleaning materials and compounds are listed in Appendix D.

b. Clean cable surfaces with a clean, lint-free cloth moistened with alcohol.

## K-14 EXTERNAL INSPECTION.

If any discrepancies are discovered, refer to the applicable repair and replacement procedures provided in the appropriate sections of this chapter.

a. Inspect all components for security of attachment.

b. Inspect that Mounting Bracket is properly secured to gun. Check for missing bolts or physical damage.

c. Inspect Transceiver Radome for physical damage. Clean if necessary.

d. Inspect all cables for nicks, cracks, and broken wires.

e. Inspect that cables are not pinched or crimped.

## K-15 M93 CHRONOGRAPH (MVS) ABBREVIATIONS.

| ABBREVIATION | NAME |
|---|---|
| DSP | Digital Signal Processor |
| EEPROM | Electrically Erasable Programmable Read-Only Memory |
| FDC | Fire Direction Center |
| FDO | Fire Direction Officer |
| I/O | Input/Output |
| K | Kilobyte |
| kHz | kilohertz |
| LCU | Lightweight Computer Unit |
| Mhz | Megahertz |
| ms | milliseconds |
| m/sec | Meters Per Second |
| MV | Muzzle Velocity |
| MVP | Muzzle Velocity Processor |
| MVV | Muzzle Velocity Variance |
| mW | milliwatts |
| RAM | Random Access Memory |
| RF | Radio Frequency |
| SCP | Survey Control Point |
| TSOP | Tactical Standard Operating Procedures |
| VDC | Volts - Direct Current |

# APPENDIX K.1

# PALADIN MUZZLE VELOCITY SYSTEM (PMVS)

## K.1-1 SCOPE.

This appendix describes the PMVS, procedures and actions that must be taken by COS POC, equipment performance and other important information for the operation of this system. Additional information can be found in FM 6-70.

## K.1-2 PLATOON LEADERSHIP ACTIONS.

The following is a checklist (Table K.1-1) that assists the platoon leadership in obtaining MVs. It is imperative that each of the steps be followed to allow for greater probability of obtaining usable MVs whether at a dedicated calibration site or updating MVVs during a live fire exercise.

**Table K.1-1. Muzzle Velocity Checklist**

| PLATOON | GUN 1 | GUN 2 | GUN 3 |
|---|---|---|---|
| PMVS CONNECTED (PRIOR TO POWER UP) | | | |
| NAV POSITION UPDATE (VERIFY PLGR FIGURE OF MERIT 1) | | | |
| ROUNDS, FUZES (BCS PROVIDES), VERIFY | | | |
| POWDER TEMPERATURE | | | |
| MVV ROUNDS (1-9) (UNIT TSOP) | | | |
| SELECT AFCS STATUS AND ENSURE PMVS IS OPERATIONAL | | | |
| BORESIGHT ENTRY | | | |
| VERIFICATION MISSION | | | |

## K.1-3 POC RESPONSIBILITIES.

The POC's main responsibility during the operation of the PMVS is to verify and record all information reported from the PDFCS. The POC will verify that communication is established by requesting MVVs from the PDFCS. There are different methods for obtaining MVVs from the PDFCS. The POC FDC chief and/or FDO must decide the preferred method:

### K.1-3.1 Initial Calibration (No previous MVVs recorded).

Ensure MVVs are deleted from the PDFCS. Gun must delete by date time group, projectile, and propellant lot. POC will request MVVs from howitzer to verify deletion. Delete MVVs in POC database.

**NOTE**

To ensure that the PDFCS has no MVVs, the POC can send an MVV table to the PDFCS with a non-existing shell/fuze combination set with an MVV reading of 0.0. A blank table cannot be sent to the PDFCS. (There must be at least one entry in the MVV table.)

## K.1-3 POC RESPONSIBILITIES - Continued

### K.1-3.2 Previous MVVs Already Recorded and Desired Lot to Measure has no MVV.

Verify previous MVVs on PDFCS and BCS with recorded historical data. Verify lot has no previous MVV in PDFCS and LCU database on PDFCS ammunition entered.

### K.1-3.3 Previous MVVs Already Recorded and Desired Lot to Measure has Previous MVV.

Verify previous MVVs on PDFCS and BCS with recorded historical data.

**NOTE**

A new MVV will not be generated unless there is a change of +/- 2.0 meters per second from recorded MVV.

The POC will then send BCS provided AMMO (if not already done). Once PDFCS has received the AMMO and the operator has had time to execute, the POC will request AMMO to verify it has been received. The POC will then verify that the PDFCS has extended lot designators and the MVS round count has been set to appropriate setting. The POC is now ready to send a mission with the appropriate round count.

Upon EOM the PDFCS will send an MVV as long as certain requirements are met:

- PDFCS calculates a new MVV.
- Change in +/- 2.0 meters per second from previously recorded MVV.

Once the PDFCS receives an acknowledgement from the BCS, the MVV will be stored. If there is no acknowledgement from the BCS the MVV will not be stored on the PDFCS. Once the BCS receives the MVV in the INPUT queue, the MVV should be displayed and verified by the FDC chief and FDO. Once the MVV has been verified the LCU operator will execute the MVV and the FDO will record it. The POC will request the MVV from the PDFCS to verify proper MVV and will conduct a verification mission.

**NOTE**

An MVV that is stored on the PDFCS will be applied to other MVVs from 3 charges up to 3 charges down, as long as there are no MVVs for that shell/propellant combination. (e.g., If charge 6W HEA has recorded MVVs and a charge 5WB HEA is being shot with no MVVs, the PDFCS will apply the charge 6WB to the 5WB to get the most accurate data. If all requirements are met with the PMVS an MVV for the 5WB should be generated and sent to the POC.)

## K.1-3 POC RESPONSIBILITIES - Continued

The POC operation checklist is provided at Table K.1-2. For troubleshooting procedures for faults found, refer to Table K.1-3.

### Table K.1-2. POC Operation Checklist

| PROCEDURE | COMPLETED |
|---|---|
| VERIFY COMMUNICATIONS | |
| VERIFY MVVs ON PDFCS AND BCS DATABASE ARE CURRENT | |
| SEND BCS PROVIDED TO PDFCS | |
| VERIFY EXTENDED LOT DESIGNATORS IN PDFCS | |
| VERIFY PMVS ROUND COUNT IN PDFCS BY VOICE | |
| SEND MISSION WITH APPROPRIATE ROUND COUNT | |
| VERIFY MVV RECEIVED FROM PDFCS (FDC CHIEF AND FDO) | |
| PROCESS MVV (EXECUTE) | |
| RECORD MVV | |
| VERIFICATION MISSION | |

### Table K.1-3. POC PMVS Operation Troubleshooting Procedures

| | |
|---|---|
| VERIFY COMMUNICATIONS | Verify initialization parameters in PDFCS and LCU database. Verify radio frequencies and setting. Try voice on digital radio. |
| VERIFY MVVs IN DATABASE IN PDFCS AND LCU | Verify that all MVVs are current from previously recorded MVVs (MVV book). |
| SEND BCS PROVIDED TO PDFCS | Verify lots sent to gun are correct and match ammunition inventory. |
| VERIFY EXTENDED LOT DESIGNATORS IN PDFCS | Request MVVs from PDFCS and verify extended lot designators. |
| VERIFY PMVS ROUND COUNT IN PDFCS | Make sure that PMVS round count is equal to or greater than the mission fired count. |
| SEND MISSION WITH APPROPRIATE ROUND COUNT | If mission does not have appropriate rounds an MVV will not be generated. |
| VERIFY MVV RECEIVED FROM PDFCS (FDC CHIEF AND FDO) | Verify that MVV received is accurate. If the MVV is invalid, then delete the MVV by propellant lot from the PDFCS. |
| RECORD MVV | The battalion and batteries should keep a detailed record of all MVVs for each weapon. |

## K.1-4 EQUIPMENT PERFORMANCE.

**Radar Section**

| | |
|---|---|
| Antenna Type: | Micro strip array technology |
| Transmitter Type: | FETDRO/Amplifier |
| Output Power: | 300 mW ± 1 dB |
| Antenna Gain: | 22 db ± 1 dB |
| Horizontal Beam: | 10° ± 1° |
| Vertical Beam: | 20° ± 1° |
| Noise Figure: | 6dB ± 1 dB |
| Frequency: | 10.400 - 10.600 GHz ± 0.5 MHZ |
| Frequency selection: | 5 User selectable, ± 6 MHZ |
| Frequency stability: | 100 ppm over temperature range |
| Front End Filter: | Narrow band microwave filter |

**Data Acquisition**

| | |
|---|---|
| Input Channels: | 1 |
| Anti Aliasing Filter: | Software controllable |
| Converter: | 12 Bits analog to digital converter |
| Sample Rate: | 1.6 - 3000 msec/sample, in 0.2 msec steps |
| Signal Memory | 128K samples, 1M samples optional |
| Trigger Source | Doppler, Acoustic, accelerometer (optional) or combinations |

**Digital Section**

| | |
|---|---|
| Central Processor: | Intel 80386EX |
| Signal Processor: | Analog Device ADSP-21065 Floating Point DSP |
| Serial Interface: | 1 RS-422/RS-232 |
| Operating System: | Multi-tasking Operating System (WOS) |
| Protocol: | Standard and Customer specified protocol for FCC interface |

**General**

| | |
|---|---|
| Trigger Detector: | Built-in acoustic detector for starting the microwave transmission |

## K.1-4 EQUIPMENT PERFORMANCE - Continued

| | |
|---|---|
| System Tester: | Built-in all over Doppler system tester, integrated in oscillator |
| Motion Transducer: | Accelerometer |
| Velocity Range: | 30-3000 m/s |
| Rate of Fire: | Up to 10,000 rounds pr. Min |
| MTBF: | more than 10000 hours |
| Memory Type: | All parameter settings and results stored in non volatile FLASH memory no internal battery |
| Parameter Setting: | No input parameters required for operation |

## K.1-5 PHYSICAL CHARACTERISTICS.

| | |
|---|---|
| Dimensions: | 195 x 187 x 67 mm |
| Weight: | 5 Kg |
| Surface: | Corrosion protected, painted green |

## K.1-6 POWER REQUIREMENTS.

| | |
|---|---|
| Power Supply: | 18-32 VDC, 20 Watt |

## K.1-7 MUZZLE VELOCITY MEASUREMENT AND CALCULATION.

When armed the system waits for the trigger from the built-in acoustic sensor. There is no microwave radiation while the system is waiting for the trigger.

When the round is fired, the shockwave is detected by the built-in acoustic sensor and the antenna begins to radiate a high frequency low power signal. The signal reflected from the projectile contains information about the actual projectile velocity. The reflected signal is digitized and recorded in the unit. After 0.5 seconds of the signal being recorded the antenna is switched off.

An advanced digital signal analysis is applied to the recorded signal. The calculated velocity points are extrapolated back to the time for muzzle exit and the muzzle velocity of the round calculated. The result is submitted to the FCC.

## K.1-8 DOPPLER ANTENNA SECTION.

The antenna section of the PMVS has a built in microwave switch, narrow band microwave filter, acoustic trigger, motion compensation transducer and an all over system Doppler test device. The microwave radiation is controlled from the digital section and the switch is only turned on when a trigger is detected from the acoustic trigger in the antenna. The microwave transmission is automatically turned off after the measurement is finished, typically 0.5 second after muzzle exit. The antenna can also be set in a mode where the antenna is always transmitting.

The narrow band microwave filter makes sure that other raders, especially high power pulse radars, do not saturate the receiver in the Doppler radar antenna. The transmitting frequency is controlled from the digital section and enables several systems to be used in parallel with different transmitting frequencies. The all over system test generator, integrated in the oscillator, generates a Doppler signal and is used for a total system test during power up.

## K.1-9 DIGITAL PROCESSOR SECTION.

The digital section contains the data acquisition and processing unit for calculation of all results. It is fully remote controlled from the Fire Control Computer through external interfaces. The electronic section uses 3.3 volt circuits as far as possible, this allows high component density with a minimum of power consumption. The software is programmed into non volatile memory but the software can be updated through the external interface from a computer without opening the unit.

## K.1-10 OPERATION.

The PMVS has no user controllable parameters and all operation is controlled from the FCC. It uses a simple command interpreter with a basic set of commands to do the following:

- Arm and disarm the system.
- Perform a self test.
- Read and erase the calculated or stored results.
- Submit the necessary information for the Muzzle Velocity management system.

When a trigger is detected from the acoustic transducer, the system starts to radiate and digitize the return signal to the signal memory. If the trigger is rejected by the system as invalid, the system immediately stops radiating and returns to the armed mode. If the trigger is valid, the system records the data for up to 1 second before the transmitter is switched off.

The recorded signal is analysed in the digital processor unit Fast Fourier Transformer (FFT) to extract up to 128 Velocity data points. If the motion compensation option is selected, the points are corrected for the gun jump influence. An intelligent second order polynomial curve fit is applied to the data points and this curve fit is extrapolated back to the muzzle exit point. The calculated muzzle velocity is transmitted to the FCC over the serial interface and stored internally for later read out. The system returns to the idle mode within 2 seconds after the round was fired.

The use of a high number of data points and a second order polynomial fit enables the PMVS to measure the muzzle velocity on all known ammunitions with the highest possible accuracy and reliability.

## K.1-11 PACKING AND SHIPPING PMVS UNITS AND PARTS.

a. The connector dust cap is securely fastened.

b. Wrap unit with antistatic bubble sheets. Place extra bubble sheets on radar antenna transceiver face.

c. Place unit in suitable, firm carton or box.

d. Pad well with soft packing material. Verify that item will remain secure during shipment.

e. Fill carton with packing material.

f. Seal carton.

g. The unit is now ready for shipping.

## K.1-12 CLEANING.

The radiating surface of the antenna must be kept clean and free of extensive build-up of mud, dust or ice for optimum performance.

**WARNING**

To prevent death or injury make sure all electrical power to the PMVS system is removed.

**NOTE**

Normally, the PMVS will not require cleaning of any internal parts because it is sealed against dirt and moisture.

a. Disconnect W92A cable and install protective cap on connector.

b. Clean PMVS with a clean, lint-free cloth and common detergents. Take care not to scratch the radiating surface.

c. Remove protective cap from connector and reconnect W92A cable to connector.

## K.1-13 EXTERNAL INSPECTION.

If any discrepancies are discovered, refer to the applicable repair and replacement procedures provided in the appropriate sections of this chapter.

a. Inspect all components for security of attachment.

b. Inspect that Mounting Bracket is properly secured to gun. Check for missing bolts or physical damage.

c. Inspect Transceiver Radome for physical damage. Clean if necessary.

d. Inspect all cables for nicks, cracks, and broken wires.

e. Inspect that cables are not pinched or crimped.

# APPENDIX L
# OPERATION OF AUTOMATIC FIRE CONTROL SYSTEM (AFCS) (VERSION 7 SOFTWARE)

## TABLE OF CONTENTS


| | Page |
|---|---|
| L-1 SCOPE. | L-3 |
| L-2 GENERAL. | L-3 |
| L-3 AFCS OPERATING MODES. | L-3 |
| L-3.1 Training Mode. | L-3 |
| L-3.2 Normal Operation Mode. | L-4 |
| L-3.3 Maintenance Mode. | L-4 |
| L-4 AFCS OPERATING CONTROLS AND INDICATORS. | L-4 |
| L-5 DC POWER MESSAGES. | L-21 |
| L-5.1 On Auxiliary Power. | L-21 |
| L-5.2 Auxiliary Power Not Available. | L-22 |
| L-5.3 Vehicle and Auxiliary Power OK. | L-22 |
| L-6 AFCS INITIALIZATION. | L-23 |
| L-6.1 System Power-Up. | L-23 |
| L-6.2 Initializing. | L-28 |
| L-6.3 Initialization After an Orderly Shutdown. | L-77 |
| L-6.4 Initialization After a Catastrophic Failure. | L-94 |
| L-7 AFCS TRAVEL MODE. | L-96 |
| L-7.1 Movement. | L-96 |
| L-7.2 Emplacement Fire Point/Fire Area. | L-101 |
| L-8 AFCS FIRE MISSION. | L-114 |
| L-8.1 Platoon Operation Center. | L-117 |
| L-8.2 Firing Mission. | L-119 |
| L-8.3 Ammunition Accountability. | L-121 |
| L-8.4 End of Mission. | L-123 |
| L-8.5 AFCS Emergency Mission. | L-124 |
| L-8.6 Direct Fire Procedures Using AFCS. | L-126 |
| L-8.7 System Menus. | L-131 |
| L-9 AFCS AND PDIU FAULT DETECTION. | L-151 |
| L-9.1 Power Up Built-In-Test (BIT). | L-151 |
| L-9.2 AFCS Status. | L-154 |
| L-9.3 PDIU System Test. | L-160 |
| L-9.4 Weapon Control Test. | L-174 |
| L-9.5 Vehicle Motion Sensor Test. | L-178 |
| L-9.6 Audio Alert Test. | L-180 |
| L-9.7 Display Test. | L-181 |
| L-9.8 Key and Switch Test. | L-182 |
| L-9.9 Boresight Angle Entry. | L-183 |
| L-9.10 Equivalent Full Charge (EFC). | L-183 |
| L-9.11 AFCS and PDIU Abbreviations. | L-188 |
| L-9.12 Software Version/Configuration Display. | L-191 |
| L-9.13 CPU Environment Display. | L-192 |
| L-10 SYMPTOM INDEX. | L-193 |

L-11 AFCS CONFIDENCE TESTS. . . . . L-204
L-11.1 Verification of Position and Direction Using Survey Data. . . . . L-204
L-11.2 Testing the Accuracy of the AFCS Elevation. . . . . L-209

## L-1 SCOPE.

This appendix contains the procedures and actions necessary for proper operation of the Automatic Fire Control System (AFCS) utilizing Version 7 Software.

## L-2 GENERAL.

The Automatic Fire Control System (AFCS) performs ballistic computations and weapon control, provides the interface between the AFCS computer and the radios, and stores data which is displayed/entered on the Display Unit (DU).

AFCS eliminates the use of optical fire control equipment in laying vehicle for deflection and elevation during indirect fire missions. The AFCS receives target information, calculates weapons position and automatically lays the gun tube. Calls for fire are accepted directly. Communication can be performed with any authorized source.

In addition AFCS contains a maintenance utility designed to perform initial troubleshooting of the system and a Built-In Training Device (Embedded Trainer) containing a tutorial on system operations.

## L-3 AFCS OPERATING MODES.

The AFCS functions are performed during three operating modes. These modes are Training, Normal Operations, and Maintenance.

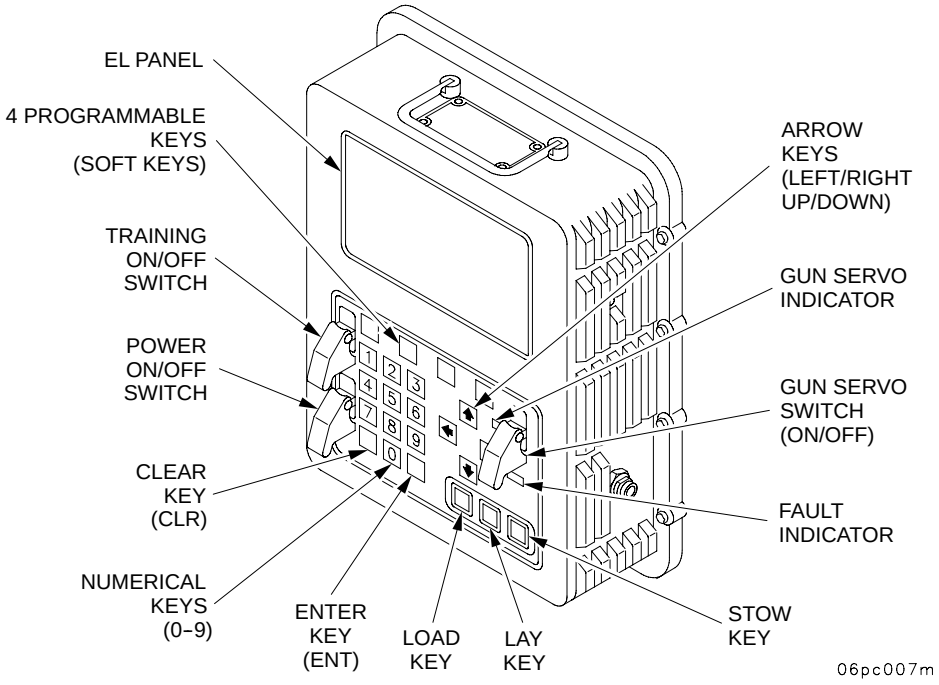


### L-3.1 Training Mode.

The AFCS has a Built-In Training Device (Embedded Trainer). This can be used as a tutorial device to train, maintain, improve, and evaluate crew efficiency/performance. This function allows for simulating Move and Fire Missions under a variety of battlefield scenarios. These include: Shoot Heavy, Move Heavy, Modified Balanced, as well as Degraded conditions (for AFCS), all without need for radio communications (AFCS simulates all radio communications so training can be accomplished without POC assets). In addition, the Embedded Trainer can be run from a Beginner's Tutorial option through a full scale scenario.

## L-3 AFCS Operating Modes - Continued

### L-3.2 Normal Operation Mode.

During the normal operation mode, there are submodes which make up initializing the system navigation, emplacement, and firing the howitzer. These submodes are initialization, travel, and fire mission.

### L-3.3 Maintenance Mode.

This mode is designed to be used by the crew to do initial troubleshooting of a failure in the AFCS, isolate to an LRU and expedite repair, and view detailed software configuration information for each LRU/CPCI.

## L-4 AFCS OPERATING CONTROLS AND INDICATORS.

a. GUN SERVO Indicator Lamp. This amber indicator lamp will come on only during AFCS movement of the weapon. Additionally, the lamp stays on when the servos position the weapon on command LAY.

b. GUN SERVO ON/OFF Switch. This toggle switch enables gun servo units. Lifting guard and placing switch in ON position allows AFCS to control gun servo valves. (This is required for Gun Laying by AFCS, also needed for STOW and LOAD commands by AFCS.) Closing switch guard will automatically place switch in OFF position.

c. Arrow Keys (up/right/down and left). Pressing proper key will move highlighted area of display on EL Panel.

d. FAULT Indicator Lamp. This indicator lamp will come on when a failure has been detected by internal BIT of AFCS.

e. STOW Key. With GUN switch ON, pressing STOW key will automatically return gun to a position above the travel lock. (Final tube positioning to secure gun in travel lock must be done with gunner's/COS control handles.)

f. LAY Key. With GUN switch ON, pressing LAY key will automatically drive gun to Commanded (CMD) position by AFCS (in proper azimuth and elevation).

g. LOAD Key. With GUN switch ON, pressing LOAD key during high firing angles will automatically return gun to a preselected low elevation angle. This allows easier loading of gun.

   (1) During Fire Mission. Pressing LOAD key during a Fire Mission will return gun to preselected load elevation and traverse gun to LAY position.

   (2) Prior to Fire Mission. Pressing LOAD key prior to a Fire Mission (Section in Order) will return gun to preselected load elevation and traverse to Final Protective Fire (FPF) azimuth.

**NOTE**

If there is no FPF, the gun will traverse to the assigned center sector of fire.

h. KEYPAD (Numerals 0 through 9, CLR--clear, and ENT--enter keys). These keys are used for entering data. The CLR key is used to delete a numeric entry within the cursor field on EL Panel. The ENT key is used to insert a numeric entry into highlighted field on EL Panel.

**NOTE**

If DU POWER is switched to OFF, alignment data will have to be reentered at next power up. Navigation Restart is a 15-minute procedure. Closing switch guard will not place this switch in OFF position. Switch must be manually put in OFF position.

## L-4 AFCS Operating Controls and Indicators - Continued

i. POWER ON/OFF Switch. Lifting the guard and placing switch in ON position powers up AFCS. System will then automatically perform self-test (BIT). After BIT, AFCS will control gun hydraulics when GUN ON/OFF switch is ON. At this time, some gun movement may occur. Do not power down DU (AFCS) when entering/exiting different modes. After AFCS has been powered down, the AFCS will power up and be operational in approximately 3-4 minutes.

j. TRAINING ON/OFF Switch. Lifting the guard and placing switch in ON position while AFCS is at the select operating mode menu allows operator to select Training Mode. (To exit Training Mode, either finish scenario and exit via appropriate soft key, or place TRAINING ON/OFF switch to OFF and select appropriate soft key to exit.)

k. Soft Keys (four). Function of keys depends on menu being displayed (worked). Lowest display line identifies function.

l. EL Panel. Displays various menus, operator alerts/warnings, messages and orders/commands. Information shown on the EL panel will vary, but format will remain the same. The format will show possible fire mission data fields, advisory messages, instructions, and commands. The EL panel data fields are numbered as follows:

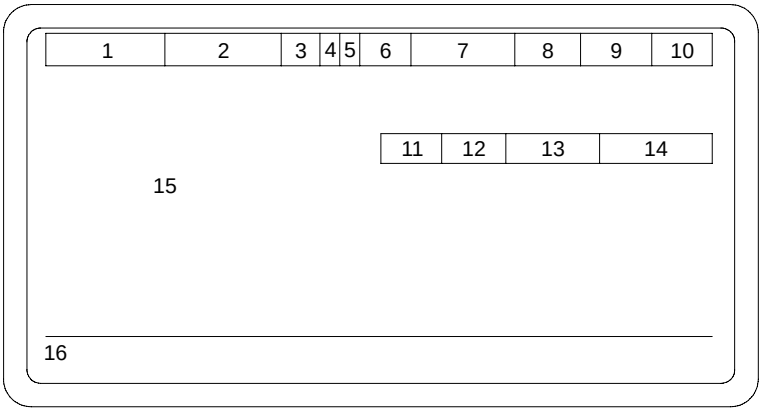


06pc088m

(1) Field 1, AFCS Operational Mode - The following can appear:

NORMAL - This indicates that the NORMAL OPERATIONAL mode is selected.

EMB TNG - This indicates that the TRAINING mode is selected.

MAINT - This indicates that the maintenance mode is selected.

REV XX - This indicates system software version identifier. Shown only until an AFCS mode selection is made.

(blank) - This indicates that the AFCS software is undetermined.

## L-4 AFCS Operating Controls and Indicators - Continued

(2) Field 2, FIRE MISSION STATUS – The following can appear:

CHKFIRE – This indicates that a checkfire status exists on the AFCS. This message will appear in inverse video.

FIREMSN – This indicates that the AFCS is performing a fire mission. This message will appear in inverse video.

(blank) – This indicates that the AFCS is in normal operating status awaiting orders.

(3) Field 3, MOVE ORDER INDICATOR – The following data may appear.

MO – This indicates that the AFCS has an active move order. This indicator will appear in inverse video.

(blank) – This indicates that there is no move order active.

(4) Field 4, WARNING MESSAGE INDICATOR –

W – If the letter W appears in inverse video a warning message has been queued.

(blank) – This indicates that there are no warning messages for the operator to view.

(5) Field 5, RECEIVED MESSAGE INDICATOR –

R – If the letter R appears in inverse video a received message has been queued.

(blank) – This indicates that there are no received messages for the operator.

(6) Field 6, ALIGN TIME TO GO INDICATOR – This three (3) character field indicates that the AFCS is performing navigation alignment and should be complete in “nnn” (0...900) seconds or indicates that the AFCS has initiated a command sequence with the Navigation Device. Following are the data that may appear in this field, in highest to lowest priority order:

ZPT – This indicates that the DRU has indicated a ZUPT Stop has been requested.

CMD – This indicates that the AFCS has initiated a command sequence with the Navigation Device and the command sequence has not yet been completed.

POS – This indicates that the Navigation Device has requested a position update.

nnn – This three digit number indicates the number of seconds remaining before navigation alignment is complete. If the most significant digit is not the left most digit, the value will be padded with zeros on its left side.

(blank) – If the field is blank then the AFCS is not undergoing navigational alignment.

## L-4 AFCS Operating Controls and Indicators - Continued

(7) Field 7, FUNCTION STATUS – Indicates the status of the various AFCS functions. The following data may appear in this field when in normal or training operational modes:

"NACW" – Each letter of this string indicates that a function is not available or non-operational. The letters represent the status of the following functions:

"N" – Navigation function

"A" – GPS Aiding function

"C" – Communications Function

"W" – Weapon Control Function

" " – Spare

(blank) – The absence of a letter indicates that the associated function is available.

**NOTE**

When "DRY FIRE" has been selected in the FIRE MISSION MODE Muzzle Velocity processing and EFC processing shall not be performed. All other functions are performed as they would be in a normal Live Fire Mode. An operator warning, "D" shall be shown in position 4 of the Function Status Field. This warning shall remain in all screens until "LIVE FIRE" is selected.

(8) Field 8, LOAD KEY STATUS – this four (4) character field indicates the status of the load key. The following data may appear in this field:

LOAD – This indicates that the load key is active. If this field is highlighted, it indicates that the tube is within the load elevation.

(blank) – This indicates that the load key is inactive.

(9) Field 9, LAY KEY STATUS – This three (3) character field indicates the status of the LAY key. The following may appear in this field:

LAY – This indicates that the LAY key is active. If this field is highlighted, it indicates that the tube is at the latest LAY commands.

(blank) – This indicates that the LAY key is inactive.

## L-4 AFCS Operating Controls and Indicators - Continued

(10) Field 10, STOW KEY STATUS – This three (3) character field indicates the status of the STOW key. The following data may appear in this field:

STOW – This indicates that the STOW key is active. If this field is highlighted it indicates that the tube is within the STOW position.

(blank) – This indicates that the STOW key is inactive.

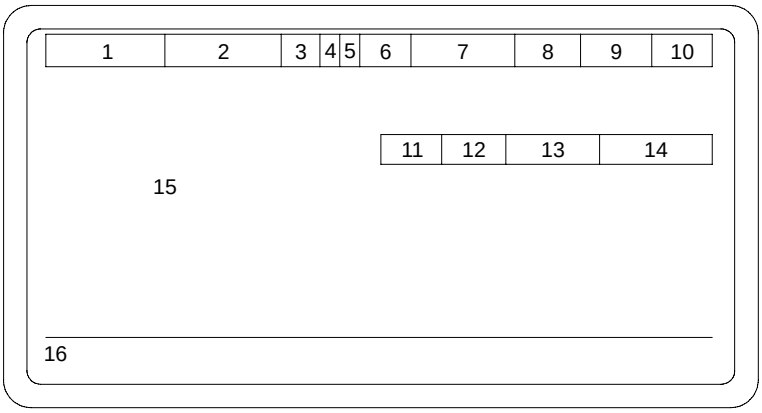


06pc088m

(11) Field 11, Mission Priority – The following may appear:

FPF – This indicates that the mission is a Final Protective Fire mission.

PRI – This indicates that the mission is a Priority mission.

(blank) – This indicates that the mission is a Normal mission.

(12) Field 12, Mission Urgency – The following may appear:

DC – This indicates that the mission has an associated Danger Close status.

TOT – This indicates that the AFCS is processing a Time On Target fire mission.

(blank) – This indicates that the AFCS has Normal urgency for this mission.

(13) Field 13, Tube Temperature Status – One of the following three will appear:

COLD – This indicates that the tube temperature is in a cold status.

WARM – This indicates that the tube temperature is in a warm status.

HOT – This indicates that the tube temperature is in a hot status.

(blank) – This indicates that the tube temperature is not available.

(14) Field 14, Safe Time in Tube Status – This indicates the current safe time for a round to be in the tube. The time is shown in minutes; refer to para 2-17d. When the tube is cold, this indicator is blank to indicate that there is no limit on the safe time in the tube.

## L-4 AFCS Operating Controls and Indicators - Continued

(15) Field 15, Various instructions and warnings will appear in this area, as necessary. Some of the advisory messages and/or instructions displayed in field 15 are listed below:

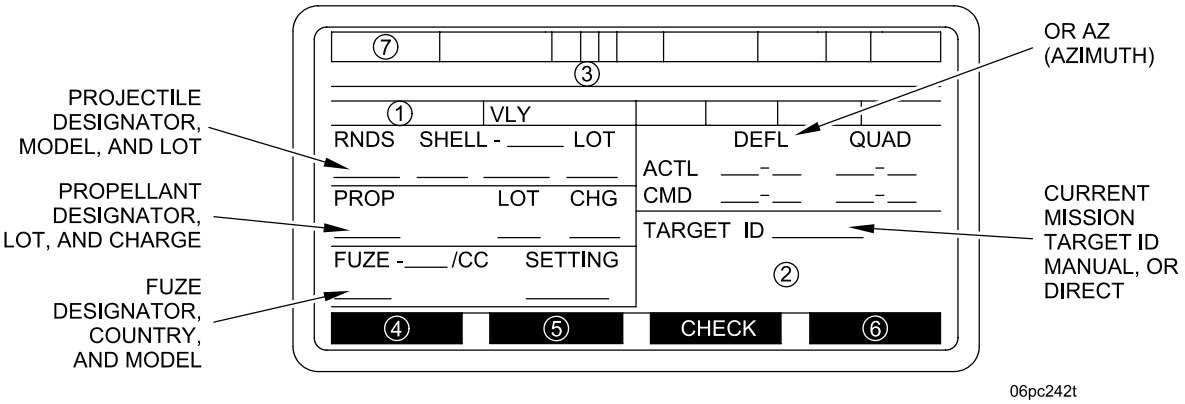


Listed below are the legal values for each field of FIRE MISSION display.

VLY / = current volley being displayed: 1/1, 1/2 or 2/2

**NOTE**

The 1/1, 1/2, and 2/2 data shall not be displayed for operator initiated fire missions and missions that are in fire commands format.

RNDS = Number of rounds remaining to fire 1..99
SHELL = Shell model and mnemonic
SHELL LOT = A..Z
PROP = Propellant model
PROP LOT = A..Z
CHG = Propellant charge designator (see Table L-1)
FUZE = Fuze model, Country and mnemonic
SETTING = Computed fuze setting, “PD” or “DELAY”
DEFL or AZ = 0.0..6399.9 mils
QUAD = -200.0+1600.0 mils
TARGET ID = Current mission target identification

Instructions and warnings which could appear on the FIRE MISSION display:

(1) Blank field 1 = Fire mission is not a sheaf
SHEAF PT = This gun is participating in a multigun sheaf
SHEAF a/s = This gun is conducting a single gun sheaf
where: a..Current aimpoint number; b..Number of sheaf points

## L-4 AFCS Operating Controls and Indicators - Continued

**NOTE**

The alerts marked below with an asterisk will result in an “OK TO SHOOT?” “YES”, “NO” short error message to the AFCS operator.

If the fire mission is a multiple phase fire mission and the violation occurs for only one phase, the violation and error message will be displayed before continuing the mission.

If the fire mission has multiple aimpoints and the violation does not apply to every aimpoint, the violation and error message will be displayed for each aimpoint that has the violation, when the data for that aimpoint is displayed the first time.

The “SAFE FIRE AREA VIOLATION” warning shall be the first to appear and shall reappear after all other warnings have been cleared. The additional information in this field shall remain until it is superseded or no longer applies.

2 Blank field 2 = displayed when none of the following apply
SAFE FIRE AREA VIOLATION = The aimpoint or trajectory termination is outside of the received Safe Fire Area.*
REMEMBER TO UPDATE INVENTORY = Direct or manual fire mission and none of the following apply
WARNING TUBE IS NOT IN LAY POSITION = WC is operational and the tube is not in the lay window
TUBE MUST BE LAID MANUALLY = WC is not operational
CALL FDC IF ROUND IN TUBE = Awaiting tube clear and crew not authorized to fire
PRESS SHOT OR CLEAR TO ACK CEASELOAD = AFCS has received a ceaseload request
SECTOR OF FIRE VIOLATION = Gun-target line is outside the defined sector of fire*
SITE VIOLATION = Firing parameters violate defined mask*
INSUFFICIENT AMMO SHELL/FUZE/PROP = Insufficient inventory quantities*
INSUFFICIENT AMMO SHELL/FUZE = Insufficient inventory quantities*
INSUFFICIENT AMMO SHELL/PROP = Insufficient inventory quantities*
INSUFFICIENT AMMO FUZE/PROP = Insufficient inventory quantities*
INSUFFICIENT AMMO SHELL = Insufficient inventory quantities*
INSUFFICIENT AMMO FUZE = Insufficient inventory quantities*
INSUFFICIENT AMMO PROP = Insufficient inventory quantities*
MAX TUBE EL EXCEEDED = Computed QE exceeds the defined maximum tube elevation.*
MINIMUM QE VIOLATED = The Gun Tube has violated the minimum QE as entered by the AFCS operator. Enter Minimum Firing QE Display.*

## L-4 AFCS Operating Controls and Indicators - Continued

(3) Blank field 3 indicates that none of the following apply
FIRE WHEN READY = Fire at will
UNDER VOICE ORDERS = Manual fire mission
COMPUTING DO NOT LOAD = AFCS computing or waiting for operator response
DO NOT LOAD = Do not load mission
LOAD LAY THEN PRESS READY = At my command or Copperhead mission
WAIT FOR COMMAND = At my command after ready
WAIT NNN SECONDS = Time to fire mission or continuous interval mission. NNN maximum number is 999. If greater than 999 seconds = WAIT *** SECONDS
WAIT NNN SECONDS - FDC COMP = WAIT NNN SECONDS = Time to fire mission or continuous interval mission. NNN maximum number is 999. If greater than 999 seconds = WAIT *** SECONDS.
FIRE = Command to fire
FPF END OF MISSION = EOM of ceaseload during FPF
EARLY END OF MISSION = EOM received after load but before all rounds fired
CEASELOAD = Ceaseload received after load but before all rounds fired

(4) Blank field 4 indicates that none of the following apply
SHOT = AFCS requires notification of round fired
READY = AFCS requires notification of operator ready to fire

(5) Blank field 5 indicates that none of the following apply
CLEAR = AFCS requires notification of tube clear
OTHER VLY = Other volley information is available for operator viewing

(6) Blank field 6 indicates that fire mission is not active
ABORT = Fire mission other than direct or manual active
EOM = Direct or manual mission active

(7) "MV" = A valid MV was received from the MVS
"BAD MV" = An MV message was received from the MVS, but the data was not valid.
"NO MV" = No MV message was received from the MVS

The following alerts shall appear if the operator presses the LOAD or LAY keys and the tube transitions across the minimum quadrant elevation:

"MINIMUM QE VIOLATED" "ACK" - The gun tube has violated minimum QE entered by the operator.

"MINIMUM QE NO LONGER VIOLATED" "ACK" - The gun tube no longer violates the minimum QE entered by the operator.

## L-4 AFCS Operating Controls and Indicators - Continued

A type 2 audio alert shall be generated until the “ACK” key is pressed.

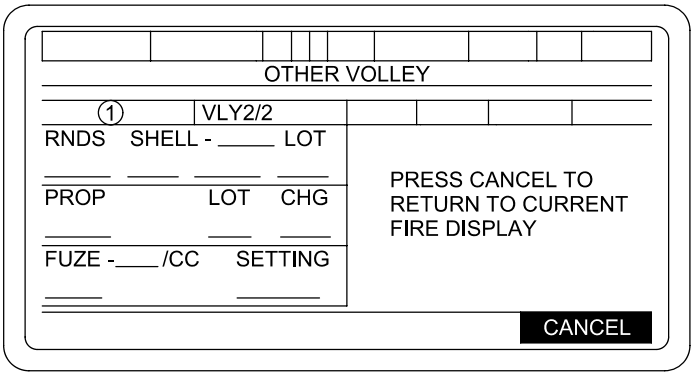


06pc243t

Listed below are the legal values for each field of the OTHER VOLLEY display:

RNDS = 1..99
SHELL = Shell model and mnemonic
SHELL LOT = A..Z
PROP = Propellant model
PROP LOT = A..Z
CHG = Propellant charge designator
FUZE = Fuze model, country and mnemonic
SETTING = Computed fuze setting, “PD” or “DELAY”

Instructions which could appear on the OTHER VOLLEY display:

1 Blank field 1 = Fire mission is not a sheaf
SHEAF PT = This gun is participating in a multi-gun sheaf
SHEAF a/b = This gun is conducting a single gun sheaf where:
a = Current aimpoint number
b = Number of sheaf points

## L-4 AFCS Operating Controls and Indicators - Continued

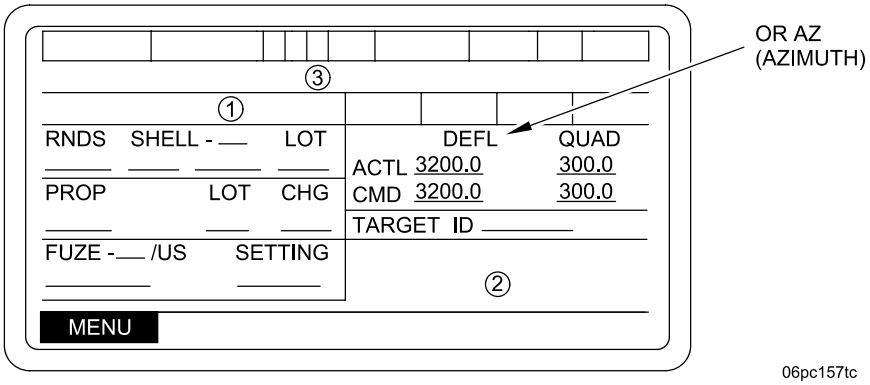


Listed below are the legal values for each field of the SECTION IN ORDER display:

RNDS = Number of rounds remaining to fire 0..99 or blank
SHELL = Shell model and mnemonic or blank
SHELL LOT = A..Z or blank
PROP = Propellant model
PROP LOT = A..Z or blank
PROP CHG = Propellant charge designator (see Table L-1) or blank
FUZE = Fuze mode and mnemonic
FUZE SETTING = Computed fuze setting, “PD” or “DELAY”
DEFL (or AZ) = 0.0..6399.9 mils
QUAD = -200.0..+1600.0 mils
TARGET ID = FPF/PRI target identification if a target exists; otherwise blank

Instructions and warnings which could appear on the SECTION IN ORDER display:

1 Blank
COMPUTING FPF/PRI
NO FPF/PRI EXISTS
UNABLE TO COMPUTE
SECTOR VIOLATION
MASK VIOLATION
INSUFFICIENT AMMO
NO FUZE INVENTORY
NO PROJ INVENTORY
NO PROP INVENTORY
BAD PROJ LOT/MODEL
NO AMMO INV COMBO
INVALID AMMO COMBO
INSUFFICIENT RANGE
NO SOLUTION
NOT FFE TYPE MISSION
UNASSIGNED FPF/PRI
TARGET TOO CLOSE
TUBE EL VIOLATION

## L-4 AFCS Operating Controls and Indicators - Continued

(2) SECTION IN ORDER AT FIRE POINT
SECTION IN ORDER WITHIN FIRE AREA
SECTION IN ORDER IN ROUTE POINT (Only displayed when the destination is not reached for a Fire Point or a Fire Area)

(3) DO NOT MOVE/DO NOT LOAD
DO NOT MOVE
MOVES ALLOWED
MOVES ALLOWED/DO NOT LOAD

### Table L-1 Charge Displayed Based on Propellant Model

| Charge Displayed | Based on propellant model |
|---|---|
| 3G, 4G, 5G | M3, M3A1, M3A1BG, M3C2, DM62 |
| 3G, 4G, 5G, 6G | MLE56 |
| 6W, 7W, 8W, 9W, 9BW | MLE69 |
| 3W, 4W, 5W, 6W, 7W | M4A1, M4A2, M4C3, M4C4, DM42, DM42B1, NM23 |
| 8 | M119A1, EBO-5 |
| 7R | M119A2, M119A2BG, NR13C1 |
| 8R | M203 |
| 8S | M203A1 |
| 1L, 2L | M231 |
| 3H, 4H, 5H | M232 |

## L-4 AFCS Operating Controls and Indicators - Continued

(16) Field 16, Function Key Label - This block is used to identify the function of the four soft keys.

Soft key messages and task actions are also displayed in this area to give the AFCS operator a means of keeping track of various AFCS related actions during AFCS operation. Typical messages are shown below:

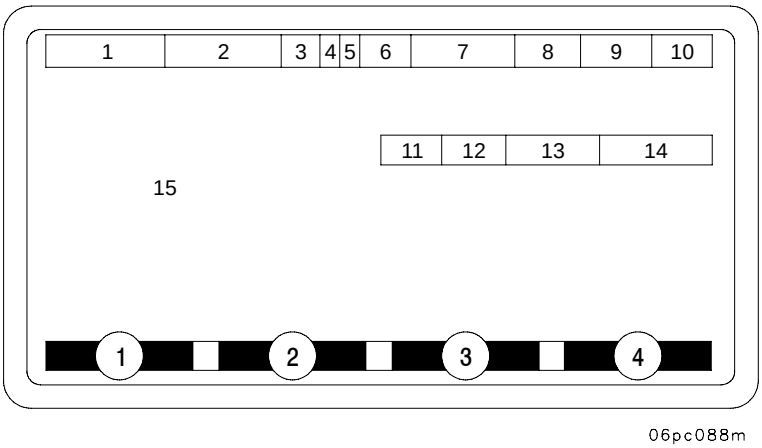


(1) Function Key 1, indicates what may appear in this field.
SELECT
NEXT MSG
+/-
MARK
ADJ
PREV
MENU
VERIFY
PREV

(2) Function Key 2, indicates what may appear in this field.
USE ALL
FINISHED
NEXT PAGE
+/-
FINISHED
USE LOCAL
FFE1
INVENTORY
ARRIVED
UPDATE EFC
CLEAR

(3) Function Key 3, indicates what may appear in this field.
CHECK
DELETE
YES
USE GPS
EMPLACE
STEERTO
FFE2
SEND
CLEAR
EXPECTED

(4) Function Key 4, indicates what may appear in this field.
CANCEL
ACK
EOM
NO
CONTINUE
MOVING
EXIT
ABORT

## L-4 AFCS Operating Controls and Indicators - Continued

HIGH PRIORITY MESSAGES

"AFCS CHECKFIRED", "ACK"
"FIRE MISSION RECEIVED", "ACK"
"POWER FAILURE SHUTDOWN", "ACK"
"ON AUX POWER START VEHICLE", "ACK"
"AUX BATTERY NOT CONNECTED", "ACK"
"VEHICLE AND AUX POWER OK", "ACK"
"NAV OUT-NSP POWER UP BIT", "ACK"
"NAV EXCESSIVE RATE RESTART REQ", "ACK"
"ALIGN ABORTED RESTART REQD", "ACK"
"MAP UPDATED NAV UPDT REQUIRED", "ACK"
"MAP/NAV CONFLICT UPDATE NAV", "ACK"
"OVERIDE AZ LIMITS", "YES", "NO"
"NAV OUT-DRU BIT FAIL", "ACK"
"NAV OUT-DRU DISCONNECT", "ACK"
"NAV OUT-NSP DISCONNECT", "ACK"
"AUX POWER LOW", "ACK"
"FIRE MISSION RCVD", "ACCEPT", "REJECT"
"MAP DATUM UPDATE REQUIRED", "ACK"
"NAV OUT-DRU INERTIAL FAIL", "ACK"
"NAV OUT-DRU OP FAIL", "ACK"
"AFCS FIRE CONTROL ALIGNMENT REQD", "ACK"

LOW PRIORITY MESSAGES

"INVALID SOFTWARE CONFIGURATION", "ACK"
"NAV POS UPDATE REQUIRED", "ACK"
"NAV POS UPDATE NO LONGER REQ", "ACK"
"ZUPT REQUIRED", "ACK"
"ZUPT NO LONGER REQUIRED", "ACK"
"MOTION DURING POS UPDATE", "ACK"
"POS UPDATE INTERRUPTED", "ACK"
"POS UPDATE N/E EXCESSIVE", "ACK"
"POS UPDATE N/E RJTD", "ACK"
"POS UPDATE ALTITUDE EXCESSIVE", "ACK"
"POS UPDATE ALTITUDE RJTD", "ACK"
"NAV RESTART RJTD VEH MOVING", "ACK"

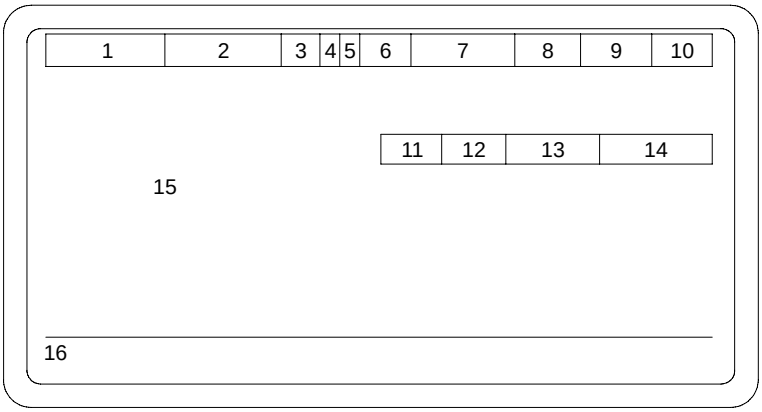


06pc088m

## L-4 AFCS Operating Controls and Indicators - Continued

LOW PRIORITY MESSAGES - CONTINUED

"NET ADDR RJTD NEW SUBSBR FILE", "ACK"
"INVALID OPERATIONAL MODE", "ACK"
"NET CONFG UPDTE RJTD FM ACTIVE", "ACK"
"NET ADDR UPDTE RJTD FM ACTIVE", "ACK"
"NAV RESTART RJTD FM ACTIVE", "ACK"
"UPDATE RJTD WRONG NAV MODE", "ACK"
"CLOCK UPDATE RJTD FM ACTIVE", "ACK"
"NAV RESTART RJTD BAD POS", "ACK"
"WPN OUT", "ACK"
"WC SUBSYSTEM OUT", "ACK"
"TUBE TEMP SENSOR OUT", "ACK"
"COMMO OUT", "ACK"
"NETWORK COMMO OUT", "ACK"
"PDIU OR PDIU BUS OUT", "ACK"
"POS UPDATE RJTD BAD POS", "ACK"
"POS UPDATE RJTD HOWITZER MOVG", "ACK"
"POS UPDATE RJTD FM ACTIVE", "ACK"
"POS UPDATE RJTD VEH MOTION", "ACK"
"RESTART RJTD NAV OUT", "ACK"
"POS UPDATE RJTD WRONG NAV MODE", "ACK"
"NET BUSY AMMO", "RETRY", "NO RETRY"
"NET BUSY REQ AMMO", "RETRY", "NO RETRY"
"NET BUSY CHECKFIRE", "RETRY", "NO RETRY"
"NET BUSY DESIGNATE", "RETRY", "NO RETRY"
"NET BUSY FREE TEXT", "RETRY", "NO RETRY"
"NET BUSY VEH STS", "RETRY", "NO RETRY"
"NET BUSY REQ VEH STS", "RETRY", "NO RETRY"
"NET BUSY REQ INT", "RETRY", "NO RETRY"
"NET BUSY SITE DATA", "RETRY", "NO RETRY"
"NET BUSY REQ SITE", "RETRY", "NO RETRY"
"NET BUSY REQ MOV ORD", "RETRY", "NO RETRY"
"NET BUSY MTO TOF", "RETRY", "NO RETRY"
"NET BUSY MTO DENY", "RETRY", "NO RETRY"
"POSITION UPDATE RJTD NAV OUT", "ACK"

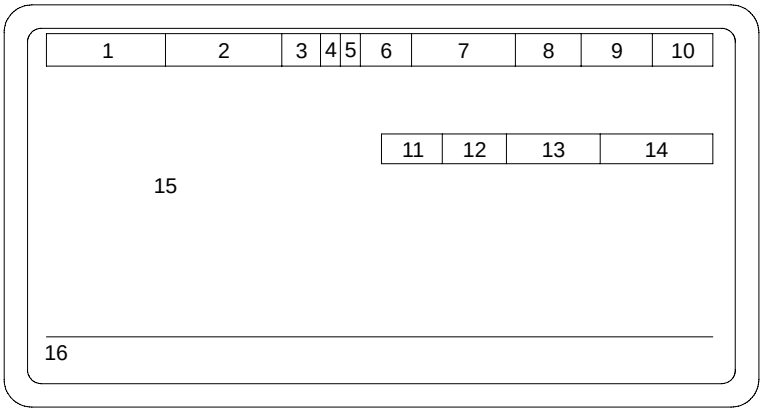


06pc088m

## L-4 AFCS Operating Controls and Indicators - Continued

LOW PRIORITY MESSAGES - CONTINUED

"NET BUSY READY", "RETRY", "NO RETRY"
"NET BUSY ROUND COMP", "RETRY", "NO RETRY"
"NET BUSY SHOT", "RETRY", "NO RETRY"
"NET BUSY SPLASH", "RETRY", "NO RETRY"
"NET BUSY TARGET FILE", "RETRY", "NO RETRY"
"NET BUSY UTE BAT", "RETRY", "NO RETRY"
"NO ACK AMMO", "RETRY", "NO RETRY"
"NO ACK REQ AMMO", "RETRY", "NO RETRY"
"NO ACK CHECK FIRE", "RETRY", "NO RETRY"
"NO ACK DESIGNATE", "RETRY", "NO RETRY"
"NO ACK FREE TEXT", "RETRY", "NO RETRY"
"NO ACK VEH STS", "RETRY", "NO RETRY"
"NO ACK REQ VEH STS", "RETRY", "NO RETRY"
"NO ACK VEH INIT", "RETRY", "NO RETRY"
"NO ACK SITE DATA", "RETRY", "NO RETRY"
"NO ACK REQ SITE DATA", "RETRY", "NO RETRY"
"NO ACK REQ MOVE ORD", "RETRY", "NO RETRY"
"NO ACK MTO TOF", "RETRY", "NO RETRY"
"NO ACK MTO DENY", "RETRY", "NO RETRY"
"NO ACK READY", "RETRY", "NO RETRY"
"NO ACK ROUND COMP", "RETRY", "NO RETRY"
"NO ACK SHOT", "RETRY", "NO RETRY"
"NO ACK SPLASH", "RETRY", "NO RETRY"
"NO ACK TARGET FILE", "RETRY", "NO RETRY"
"NO ACK UTE BAT", "RETRY", "NO RETRY"
"PDIU WARNING RECEIVED", "ACK"

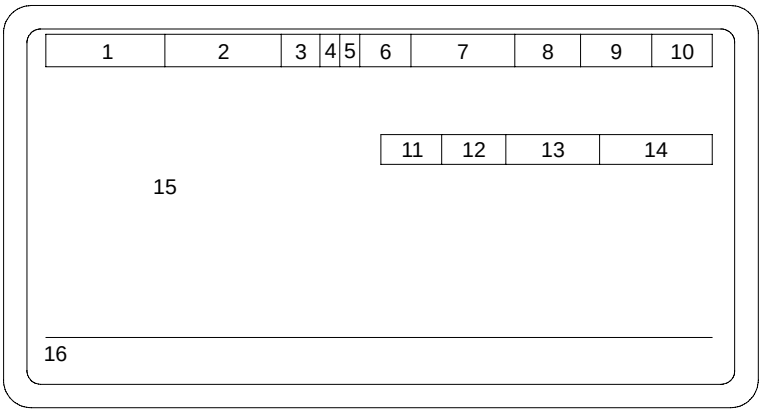


06pc088m

## L-4 AFCS Operating Controls and Indicators - Continued

LOW PRIORITY MESSAGES-CONTINUED

"PROP TEMP UPDATE PENDED", "ACK"
"AMMO INVENTORY UPDATE PENDED", "ACK"
"SITE DEFINITION UPDATE PENDED", "ACK"
"DIRECT FIRE RJTD NAV NOT INIT", "ACK"
"DIRECT FIRE RJTD WPN OUT", "ACK"
"DIRECT FIRE RJTD OUTSIDE MAP", "ACK"
"DIRECT FIRE RJTD MAP PENDING", "ACK"
"DIRECT FIRE RJTD IN CHECKFIRE", "ACK"
"DIRECT FIRE RJTD FM ACTIVE", "ACK"
"MANUAL COMMANDS RJTD FM ACTIVE", "ACK"
"MANUAL COMMANDS RJTD CHECKFIRE", "ACK"
"SIMULATED NAV FAILURE", "CLEAR"
"SIMULATED ELECTRICAL FAILURE", "CLEAR"
"SIMULATED HYDRAULIC FAILURE", "CLEAR"
"SIMULATED COMMO FAILURE", "CLEAR"
"SIMULATED WPN FAILURE", "CLEAR"
"SIMULATED NAV FAILURE", "ACK"
"SIMULATED ELECTRICAL FAILURE", "ACK"
"SIMULATED HYDRAULIC FAILURE" , "ACK"
"SIMULATED COMMO FAILURE", "ACK"
"SIMULATED WPN FAILURE", "ACK"
"SIMULATED FAILURES CLEARED", "ACK"
"MOVE RJTD DEST NOT IN MAP", "ACK"
"MOVE RJTD NO MAP", "ACK"
"MOVE RJTD MAP PENDING", "ACK"
"PRESS ACK WHEN TUBE STOWED", "ACK"
"VEHICLE MOTION SENSOR OUT", "ACK"

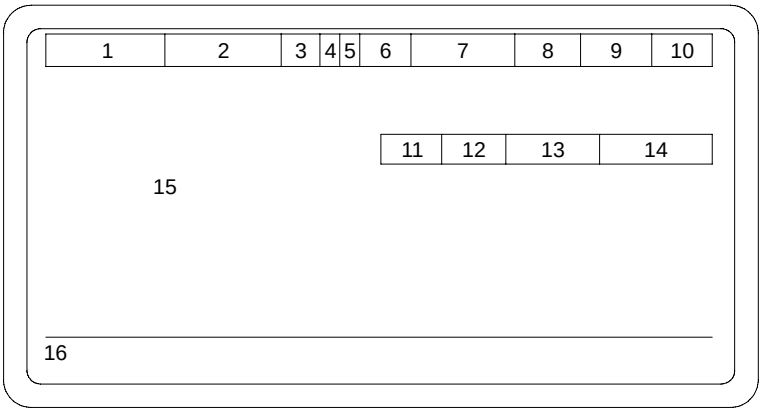


06pc088m

## L-4 AFCS Operating Controls and Indicators - Continued

LOW PRIORITY MESSAGES-CONTINUED

"DIRECT FIRE RJTO TGT COMP ERR", "ACK"
"NO BALLISTIC SOLUTION", "ACK"
"PROP TEMP UPDATE REQURIED", "ACK"
"VEHICLE MOTION SENSOR GOOD", "ACK"
"DRU OVERTEMP", "ACK"
"DRU NO LONGER OVERTEMP", "ACK"
"ZONE BOUNDARY CROSSED", "ACK"
"OK TO MOVE OR SHOOT", "ACK"
"EMBEDDED TRAINING OUT", "ACK"
"GPS OUT - PLGR DISCONNECT", "ACK"
"GPS CONNECTED", "ACK"
"GPS OUT - PLGR FAILED", "ACK"
"GPS OPERATIONAL", "ACK"
"GPS ANTENNA FAULT", "ACK"
"GPS ANTENNA OK", "ACK"
"PLGR UNKEYED", "ACK"
"INP/GPS DELTA TOO LARGE", "ACK"
"INP/GPS N/E EXCESSIVE", "ACK"
"INP/GPS N/E REJECTED", "ACK"
"INP/GPS ALT EXCESSIVE", "ACK"
"INP/GPS ALT REJECTED", "ACK"
"POSITION UPDATE BEYOND ZONE", "ACK"
"BORESIGHT UPDT RJTD VEH MOVING", "ACK"
"RESTART REQUIRED", "ACK"
"POSITION UPDATE REQUIRED", "ACK"
"DRU CONNECT", "ACK"
"INSUFFICIENT Y CODE SVS", "ACK"

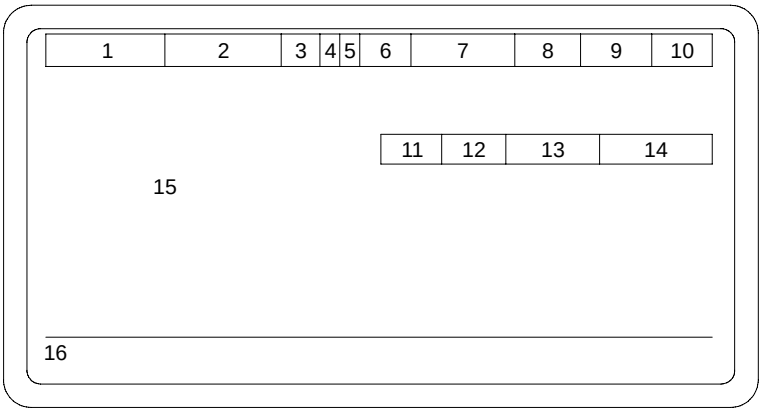


06pc088m

## L-5 DC POWER MESSAGES.

Three Auxiliary Power messages can appear on any menu being displayed on the DU panel. Operator actions for any message will be the same regardless of the menu on which it is displayed.

### L-5.1 On Auxiliary Power.

If vehicle battery voltage drops to a point below that needed by the Power Conditioner Unit (PCU) to operate the AFCS, the PCU will automatically switch to auxiliary power (backup batteries) to maintain AFCS operation. When the switch to auxiliary power occurs, an audible alert will be sounded over the intercom, and a visual alert will be displayed at the bottom of the menu.

**CAUTION**

Prolonged operation on auxiliary power may cause the AFCS to shut down automatically.

At this time, the vehicle engine must be started to recharge the vehicle batteries.

The operator must press the soft key under ACK to silence the audible alarm and eliminate the message.

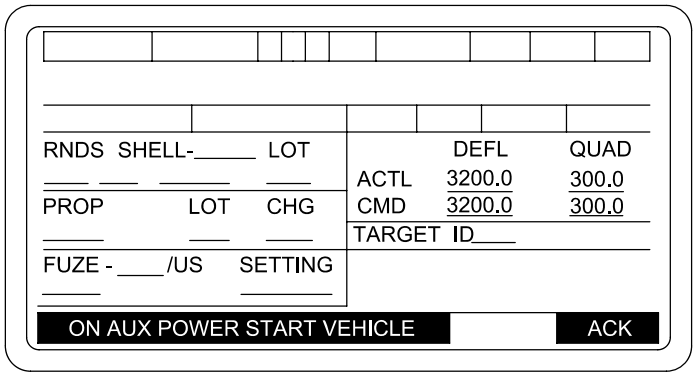


06pc157td

## L-5 DC Power Messages - Continued

### L-5.2 Auxiliary Power Not Available.

If the auxiliary power batteries are not functional (e.g., low, damaged, or disconnected), a visual alert will be displayed at the bottom of the menu.

The operator must press the soft key under ACK to eliminate the message. At this time, the vehicle engine must be started and kept running to ensure AFCS operation until auxiliary power is restored.

**NOTE**

This message can also appear during BIT.

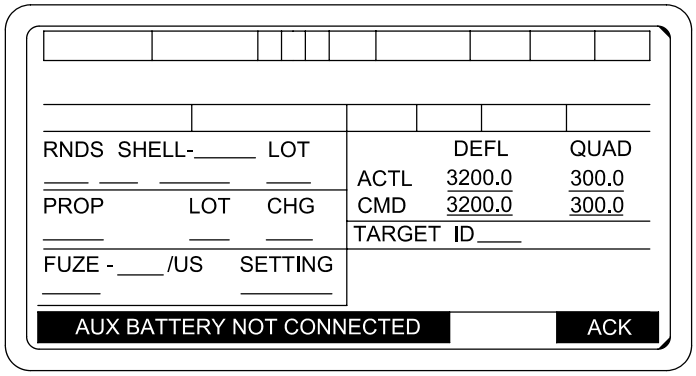


06pc158ta

### L-5.3 Vehicle and Auxiliary Power OK.

When the vehicle battery voltage rises sufficiently, the PCU will automatically switch to vehicle power. When the switch occurs, a visual alert is displayed at the bottom of the menu as shown below.

The operator must press soft key under ACK to eliminate the message.

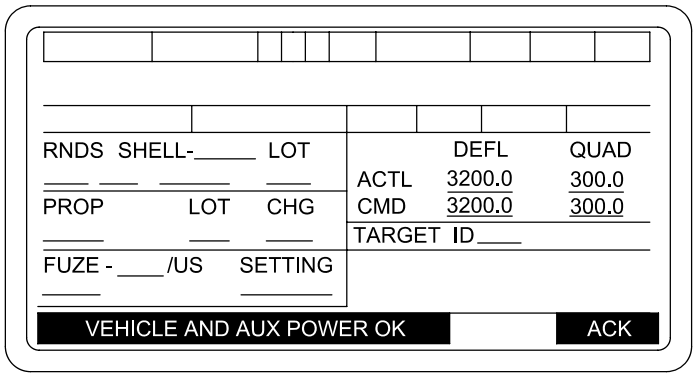


06pc159ta

# L-6 AFCS INITIALIZATION.

## L-6.1 System Power-Up.

**WARNING**

When operating the PLGR on external power with BA-5800 lithium battery installed, the battery may explode. Ensure battery is removed before connecting power cable to prevent serious injury or death.

**NOTE**

- M93 MVS must be installed and connected prior to turning the vehicle MASTER power switch ON.
- PLGR should be installed and powered prior to turning on the DU of the AFCS in order for the AFCS to use the PLGR data.
- The following steps must be completed prior to POWERING UP and INITIALIZATION of the AFCS.

a. Outside the howitzer:
   1. Left front drive sprocket must be within 1 meter of SCP.
   2. Gun tube in travel lock.
   3. M93 Chronograph connections verified.
   4. FM VOICE/DIGITAL Radio antennas are properly mounted, cables and ground connections verified.
   5. PLGR antenna cable connections verified.

b. Inside the howitzer:
   1. Turret lock in “LOCKED” position.
   2. 1553 BUS terminator connection verified.
   3. PLGR ground connection verified.
   4. PLGR installed.
   5. Set MASTER switch to ON.
   6. Ensure 10 PCU switches are ON.
   7. Turn PLGR ON, FILL verified.
   8. Turn radios ON, and perform VOICE radio check.
   9. Idle engine at 1000 to 1200 RPMs.
   10. Make sure TRAINING switch on DU is OFF.

## L-6 AFCS INITIALIZATION - Continued

### L-6.1 System Power-Up - Continued

With the PLGR in the PLGR mount and all external cables attached, press the ON/BRT key on the PLGR key pad. The PLGR should power up automatically and perform its self-test (BIT). Operate the PLGR in accordance with the PLGR TM 11-5825-291-13.

If the PLGR does not have a current key (i.e. the PLGR was previously "zeroized", newly installed or the key has expired), then load a valid key in accordance with the PLGR TM 11-5825-291-13, Section 3.6.

**NOTE**

To load a key, the DRUH must be off, or the P4 DRUH-PLGR Signal Connector must be disconnected to cause a PLGR COM FAIL. Simple re-attachment of P4 DRUH-PLGR Signal Connector after PLGR keying will automatically cause DRUH-PLGR communications to resume if DRUH is on.

If the PLGR antenna has a clear view of the sky, turn PLGR on.

If the antenna's view of the sky is blocked (e.g. the vehicle is in a building, under tree cover or parked next to a large structure), move vehicle until the PLGR antenna is clear.

If the vehicle cannot be moved, keep PLGR turned off until the vehicle can be moved to a location with a clear view of the sky.

**NOTE**

- If the PLGR is off, the Navigation System will still accept initialization data from the AFCS for inertial operation and the Navigation System will operate as before.
- Guidelines for conditions and times for the PLGR to obtain position data acceptable by the AFCS.

c. If the antenna has a clear view of the sky and PLGR has a valid position, current GPS time, current GUV key, and has stored a current satellite almanac, PLGR will be acceptable for use in about 3 minutes following the first turn-on of the day. It will take about 90 seconds for subsequent turn-ons. These are the normal operating conditions.

d. If the antenna has a clear view of the sky and PLGR has a current GUV key but PLGR doesn't have a valid position, current GPS time, or current satellite almanac, it may take up to 20 minutes after turn-on for the PLGR to output data of acceptable accuracy.

## L-6 AFCS INITIALIZATION - Continued

### L-6.1 System Power-Up - Continued

e. If the PLGR has a valid position, current GPS time, current key, and current satellite almanac, but the antenna is masked from a clear view of the sky when PLGR is turned on, it may take up to 20 minutes to get acceptable data after the vehicle is moved to a location with a clear view of the sky. This results from the PLGR initiating a search for all possible satellites if it can't lock on to those expected, for its current position, time, and almanac, within a reasonable time interval.

f. If the PLGR doesn't have a current key, its data won't be acceptable for use by the AFCS. However, assuming a clear view of the sky, it can be turned on to initialize position, time, and satellite almanac in about 20 minutes. Then when a valid key is located, the PLGR will be ready to go within three minutes.

**NOTE**

M93 MVS must be installed and connected prior to turning the vehicle MASTER power switch ON.

Make sure TRAINING switch on DU is OFF. Set POWER switch on DU to ON. When power is first applied to the AFCS, the display will be blank and the AFCS will automatically perform its internal self-test (BIT). Next a screen will be displayed with this message "AFCS OPERATING SYSTEM BOOT UP . . . PLEASE WAIT" . . ., followed by an "INITIALIZATION IN PROGRESS. . . " screen.

**NOTE**

- The time lapse between first three screens can range from 3 to 5 minutes.
- If screen stays blank for more than 7 minutes, power down system.

A SYSTEM VERIFICATION FAILURE screen may be displayed only if there is an incompatibility between hardware and software.

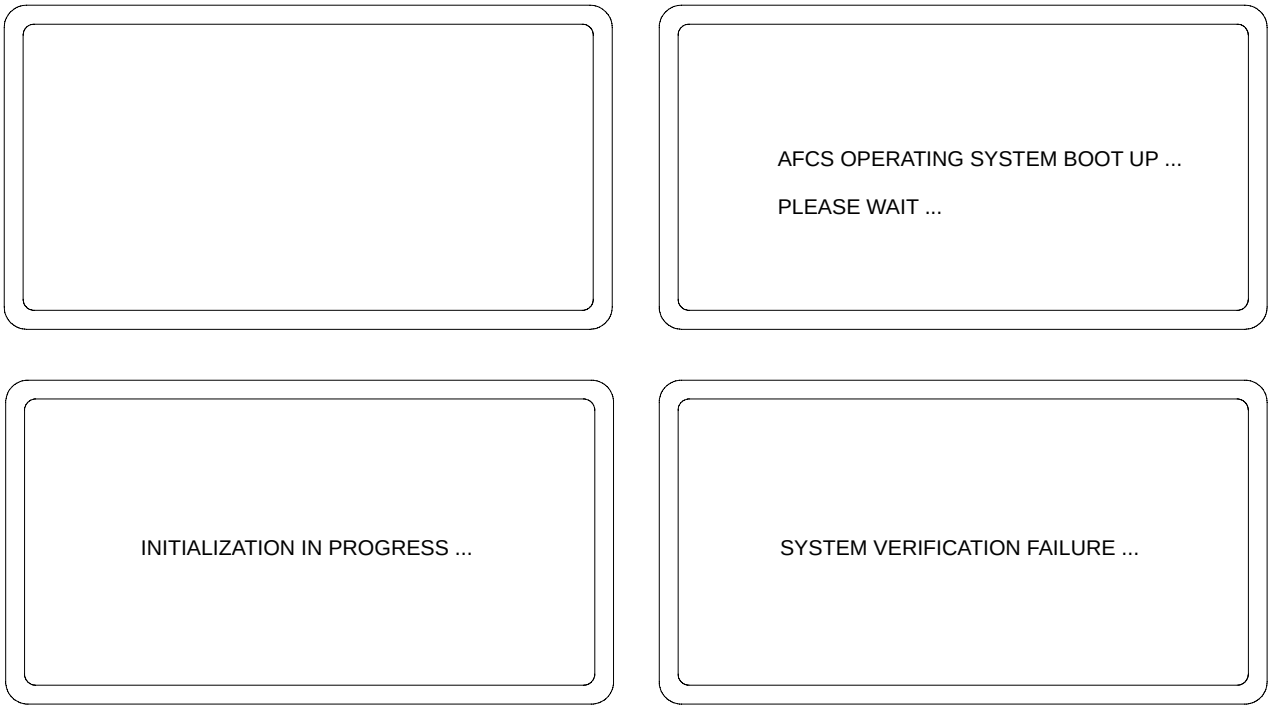


06pc414ma

# L-6 AFCS INITIALIZATION - Continued

## L-6.1 System Power-Up - Continued

After the AFCS powers up, the PLGR screen should read:

REMOTE CONTROL
Only ZEROIZE key
activated

At this point the PLGR key pad will become inactive. The only PLGR operation allowed using the key is EMERGENCY ZEROIZE.

If this message is not displayed on the PLGR screen, and the Low Priority Message “GPS OUT - PLGR DISCONNECTED” is not displayed on the DU, ensure that the DRUH-PLGR Signal Connector (P4) plug on the W17A Cable is connected and secure. Once this PLGR screen is displayed, proceed with system initialization.

**NOTE**

- NAV SUBSYSTEM includes: VMS, DRUH, VMS Modems
- PCU SUBSYSTEM includes: PCU and both Back-up Batteries.
- The switches on the PCU are circuit breakers. They should be left ON at all times, so they will not wear out from being turned off and on constantly.

This screen displays the subsystems that are checked by BIT. As the subsystems are checked, the dashed lines will change to a subsystem status (OK, DEGRADED, OUT, - - ). The - - appears on the MVS status line when the AFCS could not be connected to the MVS. This screen also identifies the system software version.

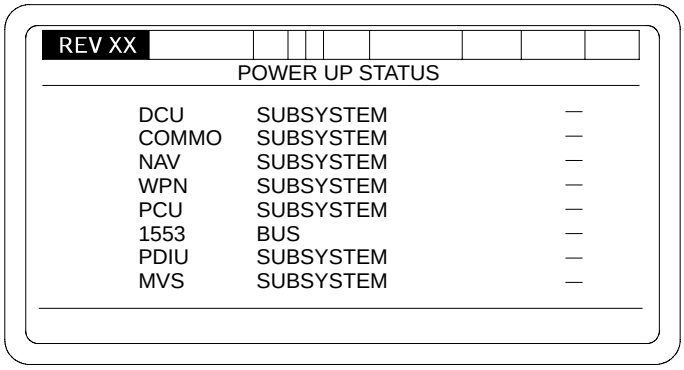


06pc071m

# L-6 AFCS INITIALIZATION - Continued

## L-6.1 System Power-Up - Continued

In the event of a failure during POWER UP STATUS, the message “DEGRADED - ACK TO CONTINUE” will be displayed on the bottom line of the EL Panel. To continue, depress soft key under ACK. After the self-test is complete, SELECT OPERATIONAL MODE menu is displayed.

**NOTE**

If all systems are OK, the screen below will not be shown.

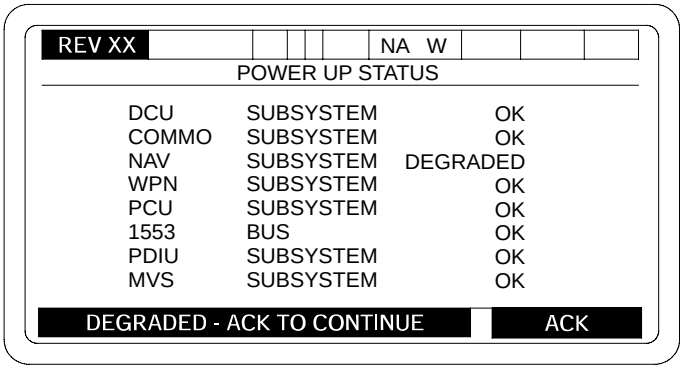


06pc072m

**NOTE**

If DCU contains an incorrect configuration, the AFCS will not allow the operator to select normal operations until a correct DCU software configuration is downloaded.

When configuration verification checking indicates that the executed software configuration is not the same as the acquired software configuration, a short error message “INVALID SOFTWARE CONFIGURATION”, “ACK” will appear on the soft key label line of the DU.

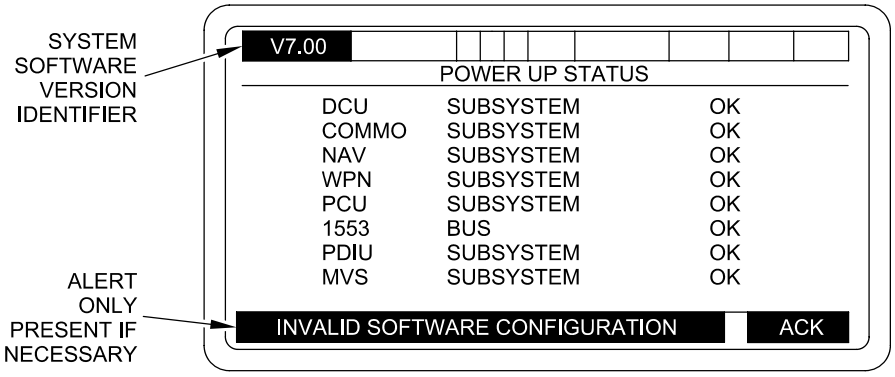


06pc245t

## L-6 AFCS INITIALIZATION - Continued

### L-6.2 Initializing.

When a Fire Control Alignment is required by the AFCS, the alert “FIRE CONTROL ALIGN” “REQ”, “ACK” will appear on the soft key label line of the DU. This alignment must be accomplished before INITIALIZATION of the AFCS can be completed. If a full Fire Control Alignment including SYSTEM RESTART or Power Cycle is not completed when it is requested, the DU FAULT lamps and ACU BIT lamp will illuminate and remain lit.

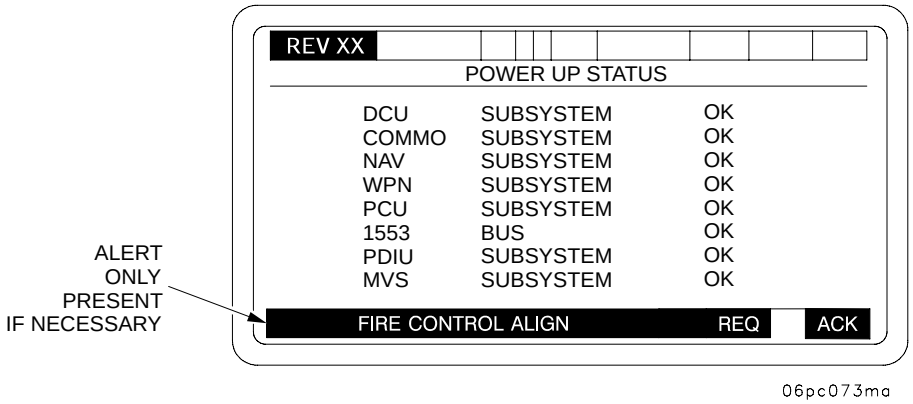


When the message is acknowledged, the AFCS will proceed to the “SELECT OPERATIONAL MODE” menu. To view detailed software configuration information for each LRU, MAINTENANCE should be selected, IAW procedure in para L-9.1.

**NOTE**

After an orderly shutdown, go to para L-6.3. However, if a catastrophic failure happens within the system, follow the procedures below.

When initializing the AFCS, communications parameters (NETWORK setup display) are entered to establish digital communications. Data to align the navigation system to a known location must also be entered at initialization. Other data to establish date/time, ammunition supply and propellant temperature, TOT response time, load elevation, and sector of fire must be entered before the initialization process is complete. All this data is input during NORMAL OPERATIONS Mode which is selected from the SELECT OPERATIONAL MODE menu.

**NOTE**

It is possible that an ALERT(S) may appear on the bottom line of the SELECT OPERATIONAL MODE screen. To continue, press the “ACK” soft key.

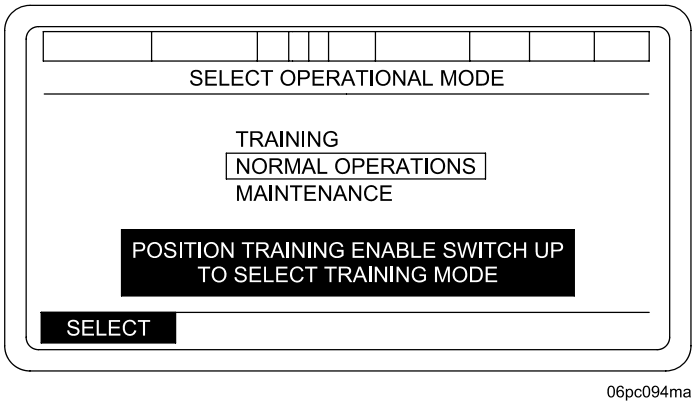

# L-6 AFCS INITIALIZATION - Continued

## L-6.2 Initializing - Continued

a. Mode Selection. Set TRAINING ON/OFF switch to OFF when selection other than TRAINING is required. Box in NORMAL OPERATIONS mode. Press SELECT key. NETWORK menu will be displayed. The operator has the option of storing up to six NETWORK configurations.

b. NETWORK display. Upon initialization of a previously configured AFCS, the display lists all previously configured network configurations.

Initialization of a virgin AFCS, all Communications Configurations, "CFG", shall be set to "___" and all other columns will be blank.

Only one network configuration will be active at any one time. The active configuration is identified by the label "*ACTIVE*" in the "STATUS" column.

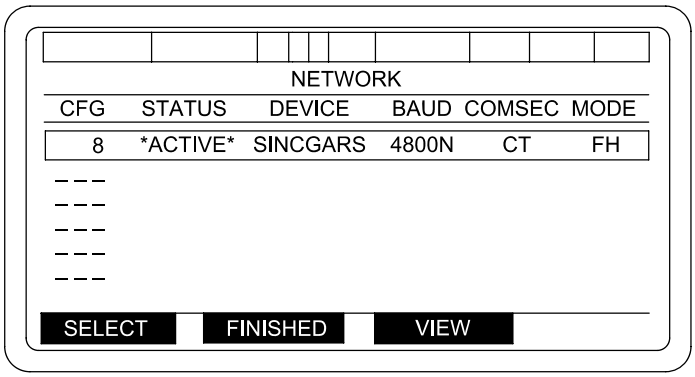


06pc321t

TACFIRE configurations will not display anything in the "COMSEC" and "MODE" columns of the NETWORK screen.

188-220 communications configurations identify the Device, Baud Rate, COMSEC and Mode. 188-220 configurations with any customized values identify the Device as "CUSTOM/R" for Radio and "CUSTOM/W" for Two-Wire.

The AFCS will not reorder network configurations as a result of deletions.

The "FINISHED" and "VIEW" soft keys are not visible unless at least one configuration is defined.

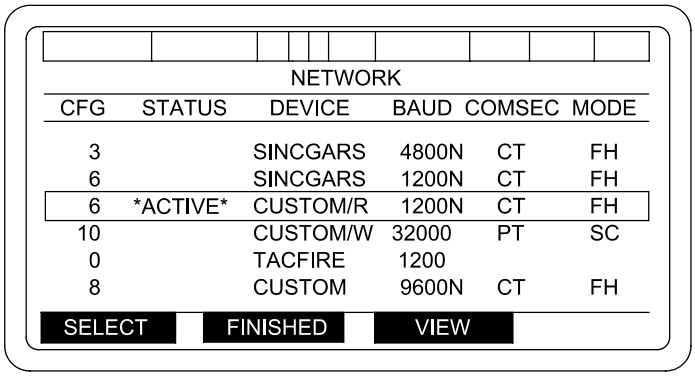


06pc322t

# L-6 AFCS INITIALIZATION - Continued

## L-6.2 Initializing - Continued

Soft key sequencing shall be as follows:

- SELECT - If the highlighted configuration was previously defined, control transitions to NETWORK SETTINGS-SELECT CONFIGURATION OPTION display. If the highlighted configuration has not been defined, control transitions to NETWORK SETTINGS-STANDARD COMMUNICATION CONFIGURATION display.
- FINISHED - When the operator presses the "FINISHED" soft key, the AFCS stores all defined network configurations and control transitions to Normal Operational Initialization Display.
- VIEW - When the "VIEW" soft key is pressed and the currently selected network configuration has been defined, control transitions to the NETWORK SETTINGS display. If the currently selected network configuration has not been defined, the "VIEW" soft key is inactive.
- CANCEL - When the "CANCEL" soft key is pressed, any defined configuration values are discarded.

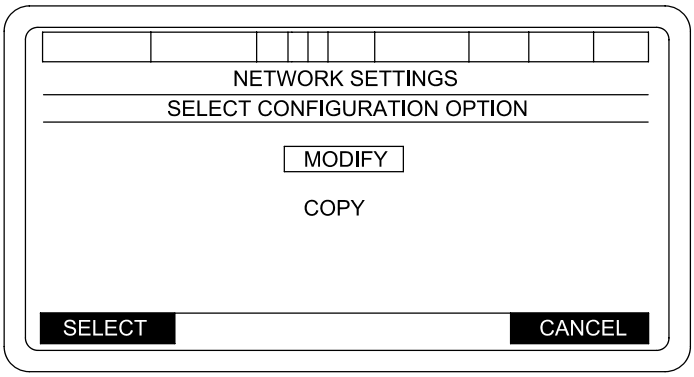


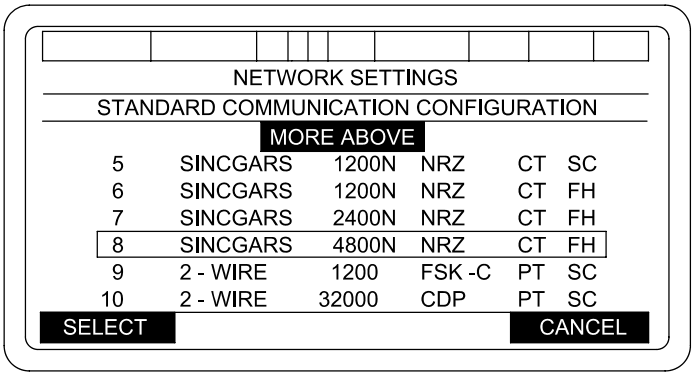


06pc320t

# L-6 AFCS INITIALIZATION - Continued

## L-6.2 Initializing - Continued

c. Standard Communications Configurations.

**NOTE**

- If the Communication Configuration is not defined in NETWORK display, then configuration #8 will be the default boxed selection.
- If the Communication Configuration is defined in NETWORK display, then that configuration number is the default boxed selection.

(1) AFCS supports the following 11 predefined communications configurations:

**Table L-2 Network Configurations**

| CONFIGURATION MODE | DEVICE | BAUD RATE | COMSEC | MODE | MODULATION |
|---|---|---|---|---|---|
| 0 | TACFIRE | 4800 | ------ | ------ | NRZ |
| 1 | Sincgars | 4800 | PT | SC | NRZ |
| 2 | Sincgars | 4800 | CT | SC | NRZ |
| 3 | Sincgars | 4800 | CT | FH | NRZ |
| 4 | Sincgars | 1200N | PT | SC | NRZ |
| 5 | Sincgars | 1200N | CT | SC | NRZ |
| 6 | Sincgars | 1200N | CT | FH | NRZ |
| 7 | Sincgars | 2400N | CT | FH | NRZ |
| 8 | Sincgars | 4800N | CT | FH | NRZ |
| 9 | 2-Wire | 1200 | PT | SC | FSK-C |
| 10 | 2-Wire | 32000 | PT | SC | CDP |

(2) Soft key sequencing shall be as follows:

- SELECT - Selects the currently boxed selection. If the currently boxed selection is Communication Configuration 0, control transitions to TACFIRE NETWORK SETTINGS. If the currently boxed selection is Communication Configuration 1 to 10, control transitions to 188-220 NETWORK SETTINGS.
- CANCEL - If the operator presses CANCEL, the current display transitions to the previous display.

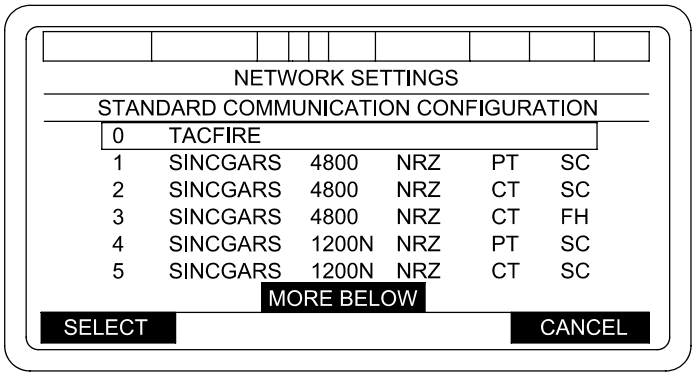


06pc319t

# L-6 AFCS INITIALIZATION - Continued

## L-6.2 Initializing - Continued

d. Network Settings-Select Configuration Option.

(1) Soft key sequencing shall be as follows:

- SELECT - Selects the currently boxed selection. Transition of control depends upon the selected menu.
- CANCEL - Allows the operator to discard any changes made. When pressed, any changes made to the current network configuration is discarded and control transitions to NETWORK display.

(2) MODIFY selection - Allows the operator to modify the current network configuration. If the current protocol is 188-220, then control transitions to 188-220 NETWORK SETTINGS. If the current protocol is TACFIRE, then control transitions to TACFIRE NETWORK SETTINGS.

(3) SET ACTIVE Selection

**NOTE**

SET ACTIVE selection will not be displayed if the current configuration is active.

This selection allows the operator to set the current network configuration as the ACTIVE configuration. The following operator prompts are displayed: “SET ACTIVE” “YES” “NO”
If NO is selected, no changes will be made.
If YES is selected, then the display will transition as follows:
If the current protocol is TACFIRE, then control shall transition to TACFIRE NETWORK SETTINGS.
If the current protocol is 188-220, then control shall transition to display 188-220 NETWORK SETTINGS CONFIGURATION.

(4) COPY selection

**NOTE**

COPY selection will not be displayed if all six network configurations have been defined.

Allows the operator to copy the current configuration into the first empty network configuration. The following operator prompt shall be displayed:
“USE ALL AND COPY?” “YES” “NO”
If NO is selected, no changes will be made.
If YES is selected, the current configuration copies into the first undefined network configuration. Control then transitions to the NETWORK display.

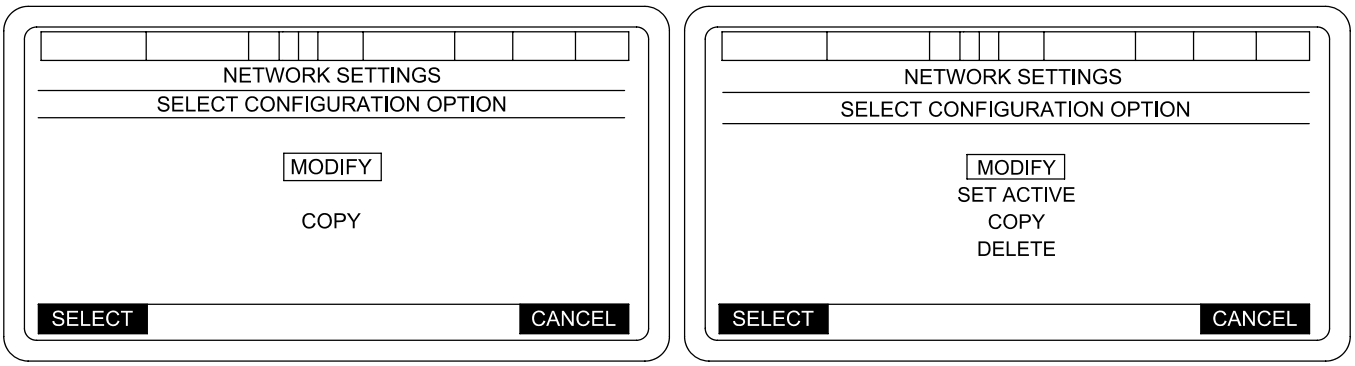


06pc318t

# L-6 AFCS INITIALIZATION - Continued

## L-6.2 Initializing - Continued

(5) DELETE selection

**NOTE**

DELETE selection will not be displayed if the current configuration is the active configuration.

Allows the operator to delete the current network configuration. The following message shall be displayed:
"DELETE NETWORK?" "YES" "NO"
If NO is selected, no changes will be made.
If YES is selected, the current configuration is deleted and control transitions to the NETWORK display.

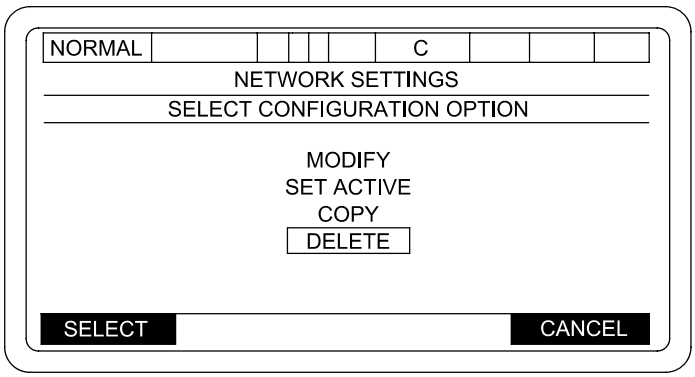


06pc317t

e. Network Settings-188-220C Protocol.

**NOTE**

- Each selection that requires configuration is marked with an asterisk. The default boxed shall be the first asterisked selection. If there are no asterisked selections, the default boxed selection is Net Type when the display is entered.

- The following values are required: "Net Type" and "Edit Addresses". If the "Net Type" is not defined, the "Edit Addresses" selection shall not be visible to the operator. The address definition depends on the "Net Type" value.

- If the "Configuration Mode" is set to "Basic", the "Advanced Settings" selection will not be visible. If the "Configuration Mode" is set to "Advanced" and any "Advanced Settings" have been customized, the "Communication Configuration" value will be displayed as "CUSTOM-XX" where "XX" is the original Communication Configuration number.

# L-6 AFCS INITIALIZATION - Continued

## L-6.2 Initializing - Continued

SELECT soft key when the following selection is boxed:

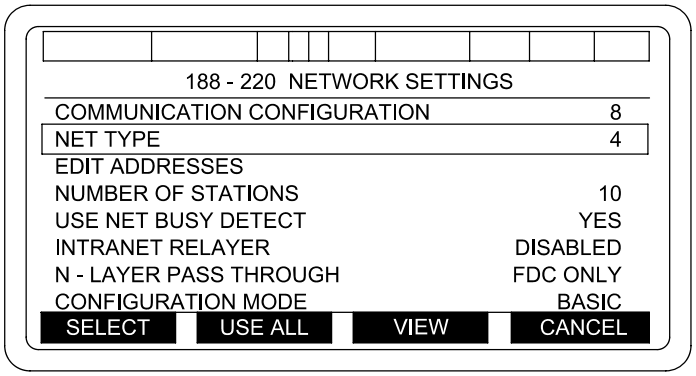


06pc316t

(1) Communication Configuration selection - Allows the operator to change the current Communication Configuration. The following message shall be displayed:
"CHANGE COMM CONFIG?" "YES" "NO".
If NO is selected, no changes will be made.
If YES is selected, the NETWORK SETTINGS-STANDARD COMMUNICATION CONFIGURATION screen will be displayed.

(2) Net Type Selection - Prompts the operator to enter a value for the "NET TYPE". The valid range is 0 TO 255.
If the "Net Type" is modified and the "Configuration Mode" is set to "Advanced", then default subscriber addresses shall be updated.
If any address becomes a duplicate of another address as a result of changing the "Net Type", the following message will be displayed:
"DUPLICATE IP ADDRESS" "ACK"
If a duplicate address is detected, the "Edit Addresses" selection is marked with an asterisk.

(3) Edit Addresses selection - Allows the operator to modify the network addresses. If the "Configuration Mode" is set to "Basic", then control transitions to 188-220 Network Addresses (Basic). If the "Configuration Mode" is set to "Advanced", then control transitions to 188-220 Network Addresses (Advanced).

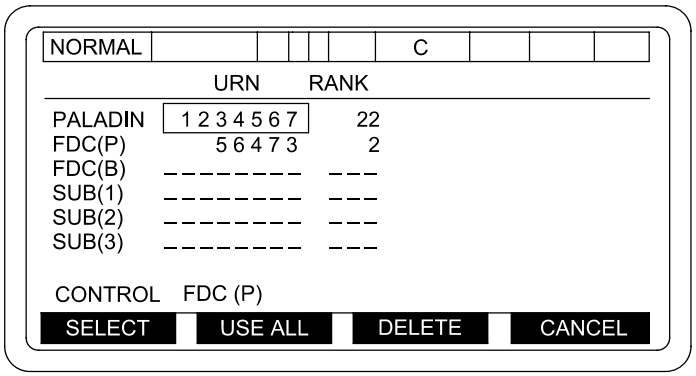


06pc315t

# L-6 AFCS INITIALIZATION - Continued

## L-6.2 Initializing - Continued

(4) Number of Stations selection – Prompts the operator to enter a value for “NUMBER OF STATIONS”. The valid range is 2 to 31 for previously undefined configurations. If the configuration has been previously defined, the valid range shall be XX to 31 where XX is equal to the highest current Rank that was selected.

(5) Use Net Busy Detect selection – If the installed TCIM is not capable of performing Net Busy Detection function, the following message shall be displayed:
“NOT SUPPORTED BY THIS TCIM” “ACK”.
If the installed TCIM supports Net Busy Detect and allows the operator to select either “YES” or “NO” by pressing the SELECT soft key.
If Use Net Busy Detect is modified when the Configuration Mode is set to “Advanced”, then the value of Busy Detect Override will be set to default value for current settings of Device, COMSEC, Mode, Modulation, Baud Rate and EDC.

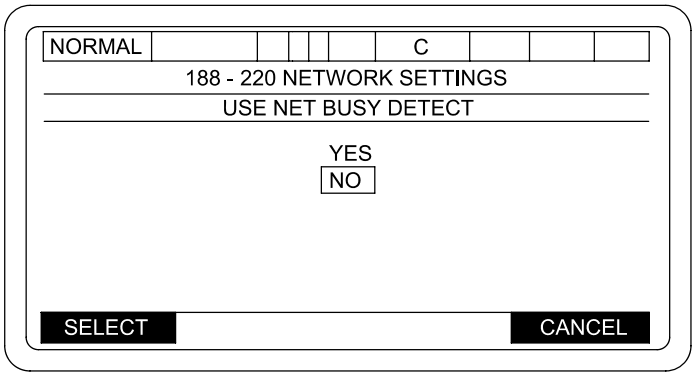


06pc314t

(6) Intranet Relayer selection – Control transitions to a screen titled “188–220 NETWORK SETTINGS – INTRANET RELAYER” and allows the operator to select either “Enabled” or “DIsabled” by pressing the SELECT soft key.

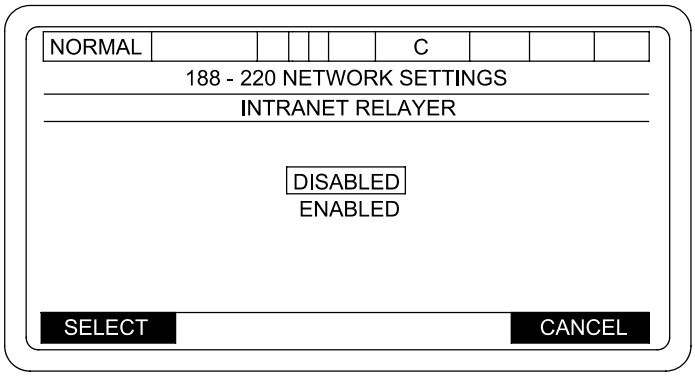


06pc313t

# L-6 AFCS INITIALIZATION - Continued

## L-6.2 Initializing - Continued

(7) N-Layer Pass Through selection - Control transitions to 188-220 NETWORK SETTINGS - N-LAYER PASS THROUGH and allows the operator to select "FDC Only" "Enabled" or "Disabled" by pressing the SELECT soft key.

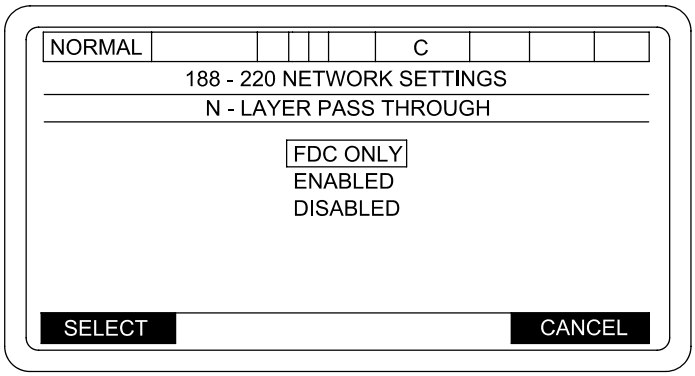


06pc312t

(8) Configuration Mode selection

If the current Configuration mode is set to "Basic", the following **WARNING** screen is displayed:

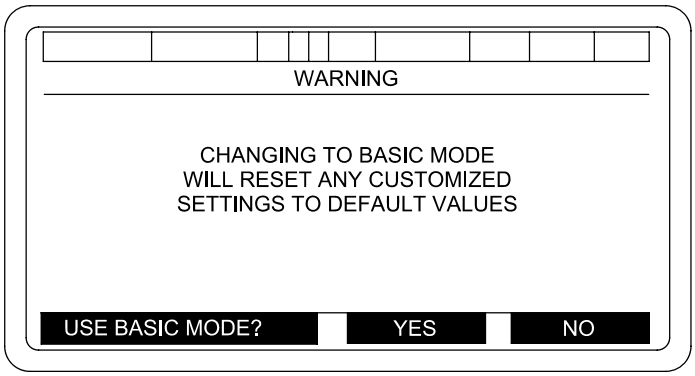


06pc310t

If the operator presses "YES", Configuration Mode changes to "Advanced".
If the operator presses "NO", Configuration Mode remains set to "Basic".

If the current Configuration Mode is set to "Advanced", the following **WARNING** screen is displayed:

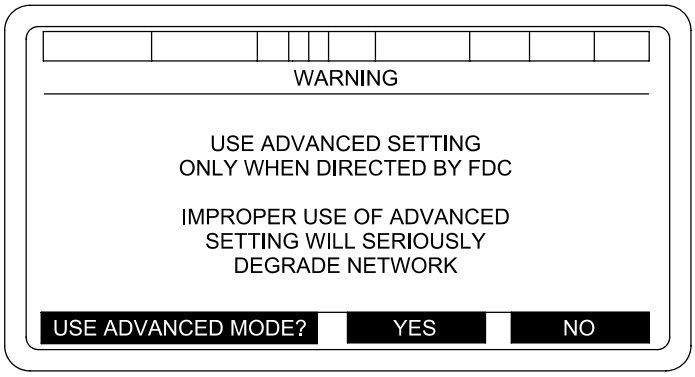


06pc311t

If the operator presses "YES", the "Configuration Mode" shall be changed to "Basic".
If the operator presses "NO", the "Configuration Mode" shall remain set to "Advanced".

# L-6 AFCS INITIALIZATION - Continued

## L-6.2 Initializing - Continued

(9) Advanced Settings selection

**WARNING**

- Modification and use of Advanced settings should only be performed at the direction of FDC. Improper use of Advanced settings will seriously degrade network.
- Advanced Setting changes are not authorized by the user unless directed by FDC. Failure to comply could result in system degradation.

When Advanced Setting is selected, control transitions to Advanced 188-220 Protocol Settings.

f. Network Settings-TACFIRE Protocol.

**NOTE**

- Each selection that requires configuration shall be marked with an asterisk. The default boxed will be the first asterisked selection. If there are no asterisked selections, the default boxed selection shall be Edit Addresses when the display is entered.
- The following values are required: "Edit Addresses", "Net Access Delay (Seconds)", and "Gun Key Time (Seconds)".
- If the "Device" value is modified and the current "Modulation" becomes invalid, the "Modulation" is set to a default value. If the "Modulation" value is modified or changed because "Device" was modified and the "Baud Rate" value becomes invalid, the "Baud Rate" is set to a default value based on "Device" and "Modulation" setting:

Pressing CANCEL soft key transitions to TACFIRE NETWORK SETTINGS display without changing the selection value. Invalid combinations will not be selectable.

SELECT soft key when the following selection is boxed:

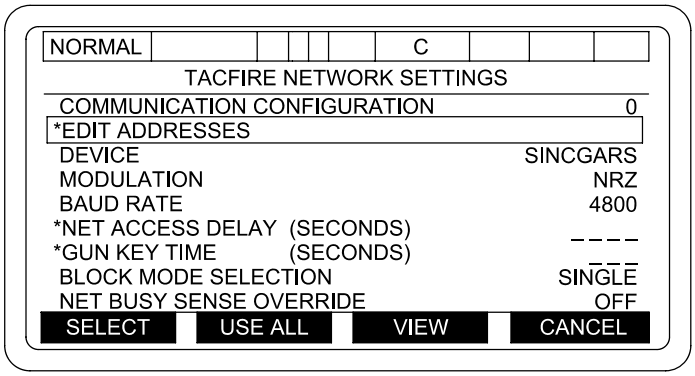


06pc307t

# L-6 AFCS INITIALIZATION - Continued

## L-6.2 Initializing - Continued

(1) Communication Configuration selection - Allows the operator to change the current Communications Configuration. The following message will be displayed:
"CHANGE COMM CONFIG?" "YES" "NO".
If NO is selected, no changes will be made.
If YES is selected, the NETWORK SETTINGS-STANDARD COMMUNICATION CONFIGURATION screen will be displayed.

(2) Edit Addresses selection - Transitions to display TACFIRE NETWORK ADDRESSES.

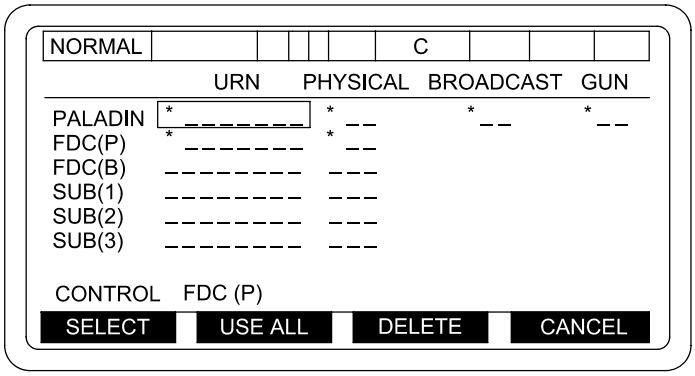


06pc308t

(3) DEVICE MODULATION, and BAUD RATE selections - Transitions to NETWORK SETTINGS-TACFIRE PROTOCOL and subtitled with the selection values shown below:

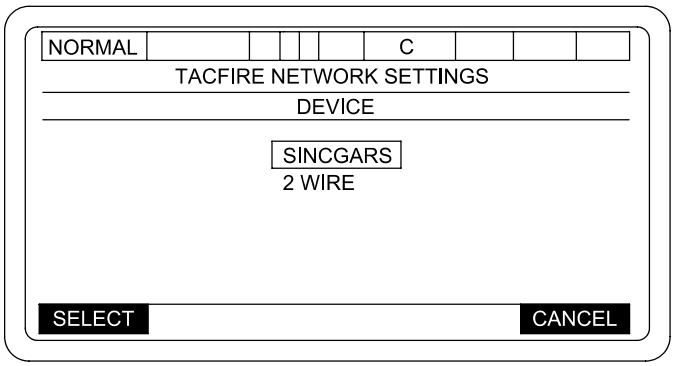


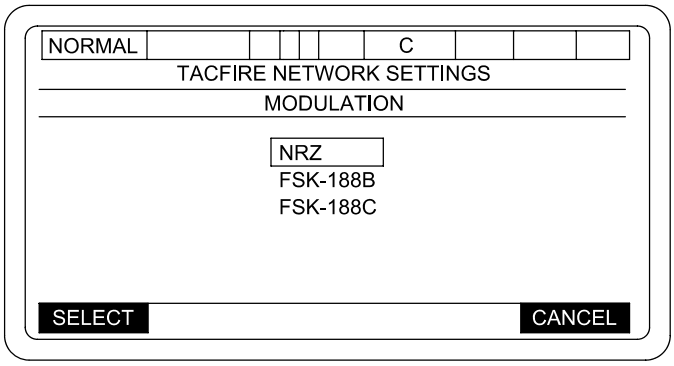


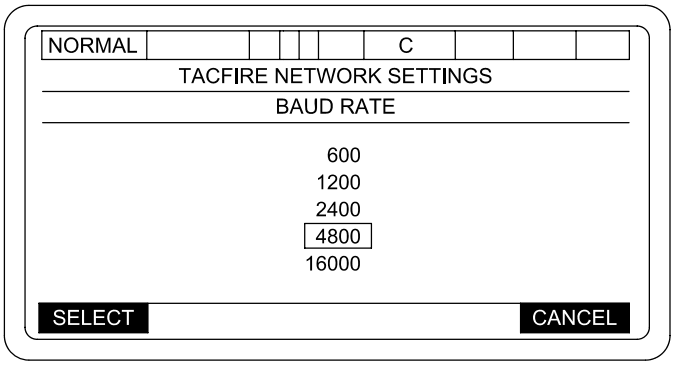


06pc30

# L-6 AFCS INITIALIZATION - Continued

## L-6.2 Initializing - Continued

(4) NET ACCESS DELAY (SECONDS) selection - Selects proper transmission delay time to maintain network access order assigned to various subscribers. To enter a new NET ACCESS DELAY TIME, box in new time. The operator is then prompted to enter a value for the "NET ACCESS DELAY" in seconds. The valid range is 0.5 seconds to 49.5 seconds in 0.5-second increments.

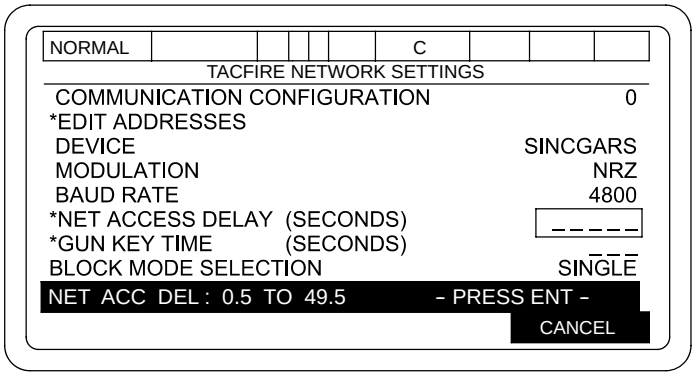


06pc305t

(5) GUN KEY TIME (SECONDS) selections - Selects assigned transmit delay time. This stabilizes the communications link and allows radio to reach full transmit power before digital data message is sent. When GUN KEY TIME is selected from NETWORK SETTINGS menu, a GUN KEY TIME menu is displayed. box in proper time. Press SELECT soft key. This will enter data and return to TACFIRE NETWORK SETTINGS menu (new GUN KEY TIME will be shown).

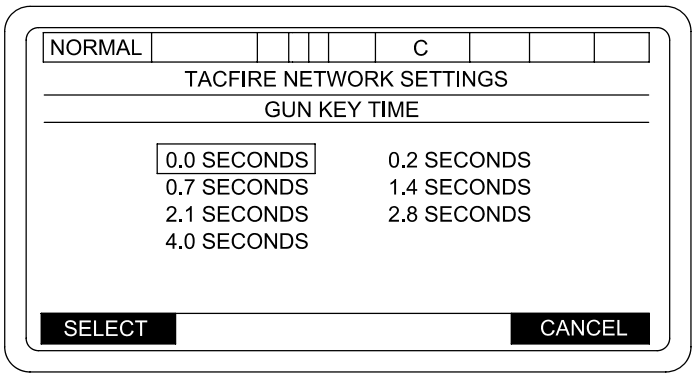


06pc306t

# L-6 AFCS INITIALIZATION - Continued

## L-6.2 Initializing - Continued

(6) BLOCK MODE selection - Selects single-block or double-block mode transmission of each data block. Double-block transmission provides for each block to be transmitted twice. when the BLOCK MODE SELECTION is selected, TACFIRE NETWORK SETTINGS - BLOCK MODE will appear with present block mode boxed in. After selection is made, TACFIRE NETWORK SETTINGS display will be shown with the new data in proper field. (Other data will remain unchanged). Double-block mode will be used when requested by Platoon Operations Center (POC).

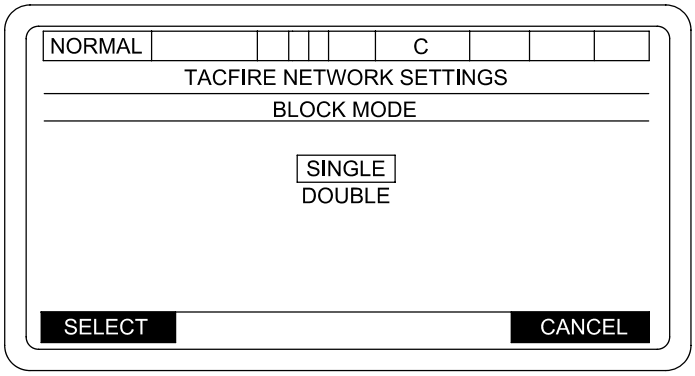


06pc303t

(7) NET BUSY SENSE OVERRIDE selection - Used to force a message through when communication net is degraded or jammed (message traffic or noise is sensed by communications processor). Selecting NET BUSY SENSE OVERRIDE (ON) when other subscribers are transmitting can cause message errors in radio traffic, and denies the other subscribers access. Consult unit SOP for proper use of NET BUSY SENSE OVERRIDE and press SELECT key. A TACFIRE NETWORK SETTINGS menu will be displayed showing present status boxed in. After proper selection, YES or NO is made, new data will be shown in the proper field. (Other data remains unchanged.)

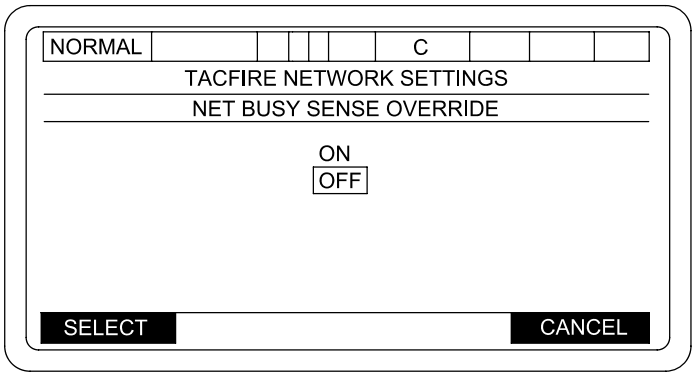


06pc304t

# L-6 AFCS INITIALIZATION - Continued

## L-6.2 Initializing - Continued

Soft key sequencing shall be as follows:

- USE ALL - If any selection is marked with an asterisk "*", the following message is displayed:
  "CLEAR * ASTERISKS* TO CONTINUE" "ACK"
  If all asterisks have been cleared, control transitions to NETWORK display.
- VIEW - Control transitions to display all protocol and address information for review using the same format as actual selection displays except fields cannot be selected.
- CANCEL - Discard any changes and control transitions to NETWORK display.

g. 188-220 Network Addresses (Basic).

**NOTE**

Each selection that requires configuration will be marked with an asterisk. The following values are required: PALADIN URN, PALADIN RANK, Controlling FDC URN, Controlling FDC RANK. Once the selection has been configured, the asterisk will be cleared.

SELECT soft key - Selects currently boxed selection. Transition of control depends on currently selected menu item as described below:

(1) CONTROL Row selection - If current controlling FDC is the primary FDC, the following message is displayed:
"CHANGE TO BACKUP?" "YES" "NO"
If the current control FDC is the backup FDC, the following message is displayed:
"CHANGE TO PRIMARY?" "YES" "NO"
If NO is selected, no changes will be made.
If YES is selected, the controlling FDC value shall be toggled with its current state.

(2) URN Column selection - Prompts the operator to enter a URN value ranging from 0 to 16,777,214. When the ENT key is pressed, the values shall be checked for duplicate URN values.
If a duplicate value is found, the following message will be displayed:
"DUPLICATE VALUE-REENTER" "ACK"
Once the message is acknowledged, the operator is required to enter a new URN or press CANCEL soft key.

# L-6 AFCS INITIALIZATION - Continued

## L-6.2 Initializing - Continued

(3) RANK Column selection - Prompts the operator to enter AFCS station rank range 1 to 31. When the ENT key is pressed, values will be checked for duplicate Station Rank values. If a duplicate value is found within the current configuration, the following message will be displayed:
"DUPLICATE VALUE-REENTER" "ACK"

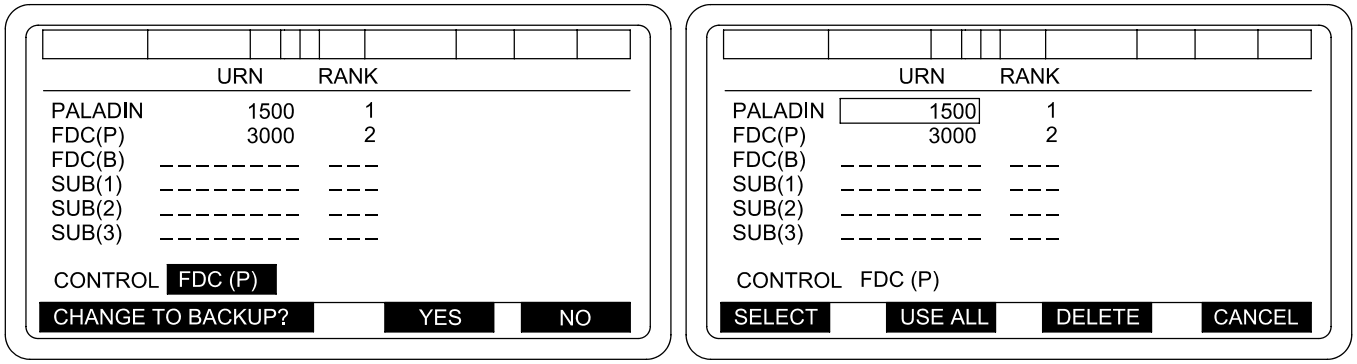


06pc302t

### NOTE

- Once the message is acknowledged, the operator is required to enter a new Station Rank value or press CANCEL.
- If the Rank entered exceeds the Number of Stations value, the Number of Stations shall be set to the Rank value entered and the following message shall be displayed: "NUMBER OF STATIONS SET TO XX" "ACK" where XX is the Rank value entered.

Soft key sequencing shall be as follows:

- USE ALL soft key - The following validity checks will be performed. If all are valid, control shall transition to 188-220 Network Settings. If any menu selections are marked with an asterisk "*", the following message will be displayed:
  "CLEAR *ASTERISKS* TO CONTINUE" "ACK"
  Address Completion Check - If a subscriber entry line has been incompletely defined (URN defined and Rank not defined, or Rank defined and URN not defined), then the following message will be displayed:
  "INCOMPLETE ADDRESS XXXXXX", "ACK"
  Where "XXXXXX" identifies the incomplete subscriber" "FDC(P)", "FDC(B)", "SUB(1)", "SUB(2)" or "SUB(3)".
- DELETE soft key - Allows the operator to delete the currently boxed URN or Rank. The following message will be displayed:
  "DELETE ADDRESS", "YES", "NO"
  If NO is selected, no changes will be made.
  If YES is selected, the current selection is deleted and its value displayed as a dashed value.
  Pressing the DELETE soft key when Control FDC selection is boxed will have no effect.
- CANCEL soft key - Discards any changes made to the addresses, control transitions to 188-220 - NETWORK SETTINGS.

# L-6 AFCS INITIALIZATION - Continued

## L-6.2 Initializing - Continued

h. TACFIRE Network Addresses.

Each selection that requires configuration is marked with an asterisk. The following values are required:

PALADIN URN
PALADIN Physical Address
PALADIN Broadcast Address
GUN
Controlling FDC URN
Controlling FDC Physical Address

SELECT soft key - Selects the currently boxed selection. Transition of control depends on currently selected menu item as described below:

(1) CONTROL Row selection - If current controlling FDC is the primary FDC, the following message is displayed:
"CHANGE TO BACKUP?" "YES" "NO"
If the current controlling FDC is the backup FDC, the following message is displayed:
"CHANGE TO PRIMARY?" "YES" "NO"
If NO is selected, no changes are made.
If YES is selected, the controlling FDC value shall be toggled with its current state.

(2) URN Column selection - Prompts the operator to enter a URN value. The valid range is 0 to 16,777,214. When the ENT key is pressed, the values are checked for duplicate URN values.
If a duplicate value is found within the current configuration, the following message is displayed:
"DUPLICATE VALUE-REENTER" "ACK"
Once the message is acknowledged, the operator is required to enter a new URN or press CANCEL soft key.

(3) PHYSICAL Column Selection - Control transitions to NETWORK SETTINGS - TACFIRE ADDRESSES with currently selected subscriber identified in the subtitle.

(4) BROADCAST Column Selection - Control transitions to NETWORK SETTINGS - TACFIRE ADDRESSES with PALADIN Broadcast Address identified in the subtitle.

(5) GUN NUMBER Column Selection - Control transitions to NETWORK SETTINGS - GUN NUMBER.

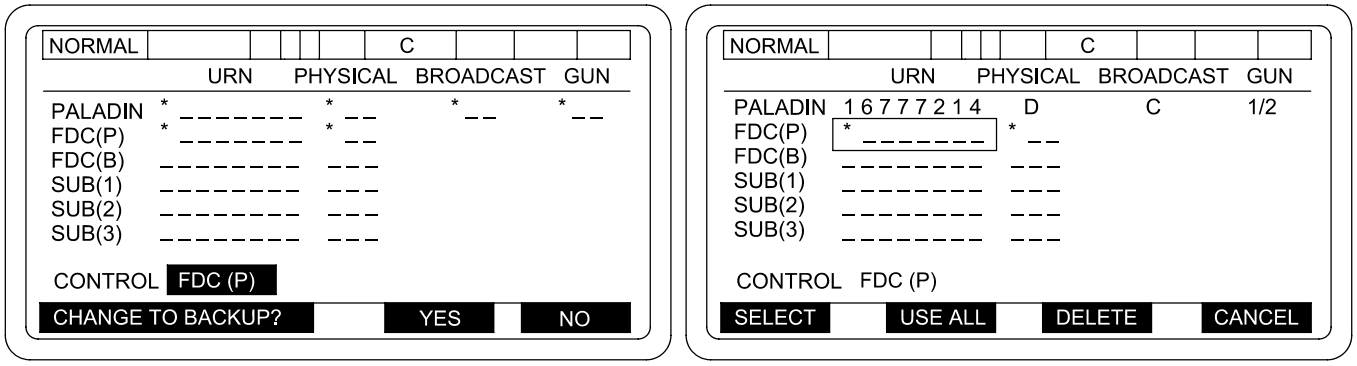


06pc301t

# L-6 AFCS INITIALIZATION - Continued

## L-6.2 Initializing - Continued

Soft key sequencing shall be as follows:

- USE ALL - If any selection is marked with an asterisk "*", the following message is displayed:
  "CLEAR *ASTERISKS* TO CONTINUE", "ACK"
  If a subscriber entry line is incompletely defined (URN defined and Address not defined, or Address defined and URN not defined), then the following message is displayed:
  "INCOMPLETE ADDRESS XXXXXX", "ACK"
  Where "XXXXXX" identifies the incomplete subscriber" 'FDC(P)", "FDC(B)", "SUB(1)", "SUB(2)" OR "SUB(3)".
  If all asterisks are cleared, the address information shall be saved and control transitions to TACFIRE NETWORK SETTINGS.

- DELETE - Allows the operator to delete the currently boxed URN or address value. The following message will be displayed:
  "DELETE ADDRESS", "YES", "NO"
  If NO is selected, no changes are made.
  If YES is selected, current selection is deleted, and its value displayed as a dashed value.
  Pressing the DELETE soft key when Control FDC selection is boxed will have no effect.

- CANCEL - Disregards any changes made to the addresses and control transitions to TACFIRE Network Settings.

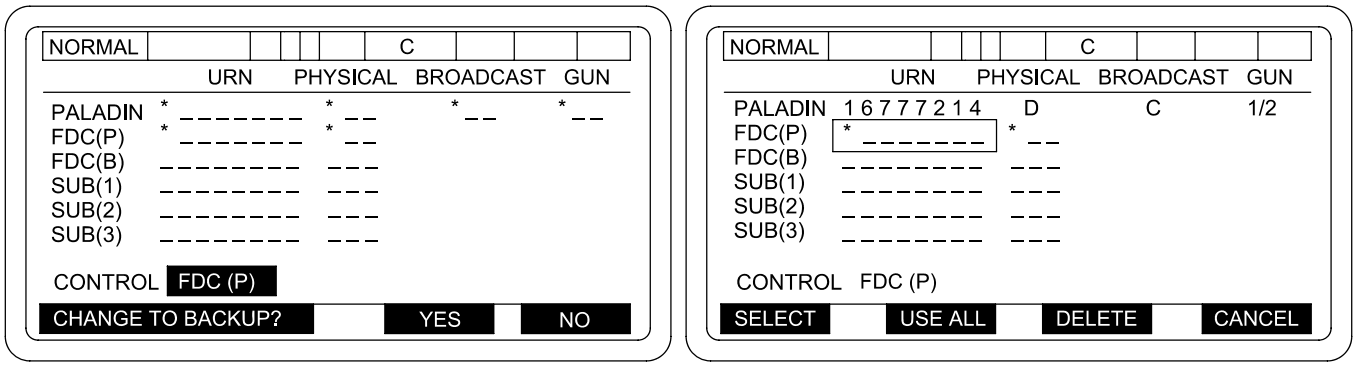


06pc301t

# L-6 AFCS INITIALIZATION - Continued

## L-6.2 Initializing - Continued

i. Network Settings - Tacfire Addresses Display.

**NOTE**

The screen subtitle will display which value is being entered as follows:

"PALADIN PHYSICAL ADDRESS"
"PALADIN BROADCAST ADDRESS"
"PRIMARY FDC ADDRESS"
"BACKUP FDC ADDRESS"
"OTHER SUBSCRIBER (1) ADDRESS"
"OTHER SUBSCRIBER (2) ADDRESS"
"OTHER SUBSCRIBER (3) ADDRESS"

Addresses currently assigned, with the exception of the address for the value displayed in the subtitle, is not selectable.

Soft key sequencing shall be as follows:

- SELECT - Selects the value currently boxed, and assigns it as the address for the device displayed in the subtitle. Control then transitions to TACFIRE NETWORK ADDRESS.
- CANCEL - Control transitions to TACFIRE NETWORK ADDRESSES without making any changes.

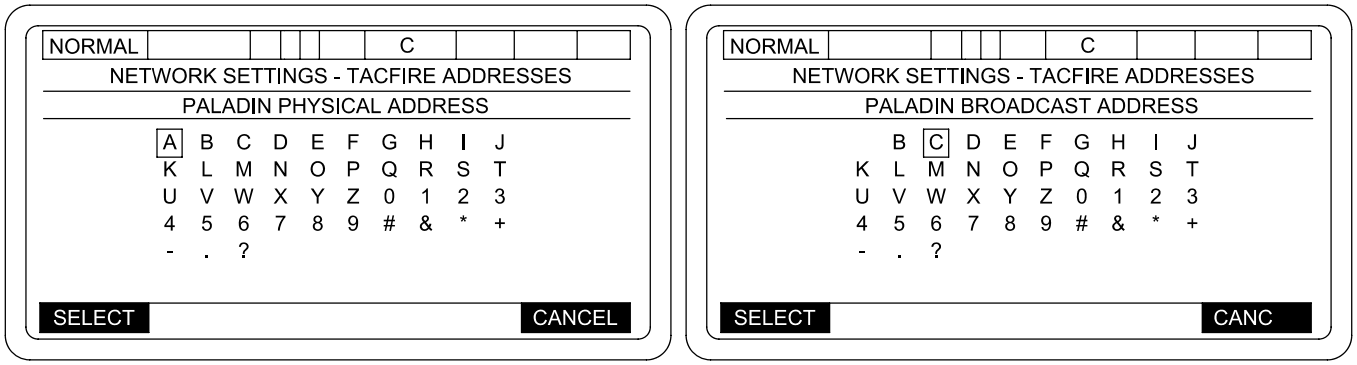


06pc299t

# L-6 AFCS INITIALIZATION - Continued

## L-6.2 Initializing - Continued

j. TACFIRE Network Settings – Gun Number Display.

Soft key sequencing shall be as follows:

- SELECT – Selects the gun number currently boxed, and assigns it as the gun number for the PALADIN address. Control then transitions to TACFIRE Network Addresses.
- CANCEL – Allows the operator to exit the screen without making any changes. Control then transitions to TACFIRE Network Addresses.

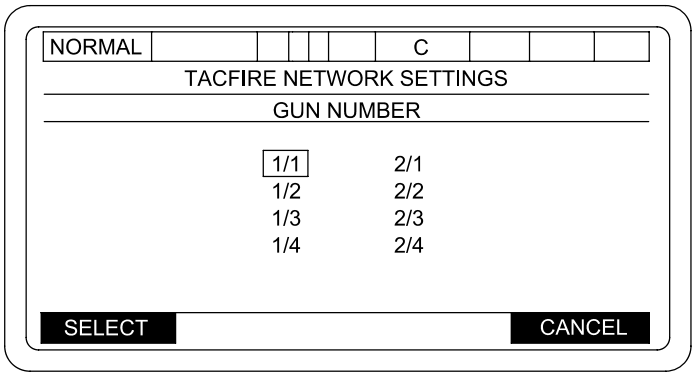


06pc300t

# L-6 AFCS INITIALIZATION - Continued

## L-6.2 Initializing - Continued

k. Other Initialization Steps. When NETWORK has been initialized, a SETUP AND INFORMATION menu will be displayed. There are two pages to this menu. By pressing NEXT PAGE key, second page will be displayed.

### NOTE

- Items marked with an * must be entered to complete initialization process. Without these data entries, the system will not be completely initialized and the AFCS will not be able to receive a mission.
- The NAV UPDATE selection will be blank when a command has been sent to the navigation subsystem and has not yet been completed.
- When in a degraded mode, some items may not appear.
- If the AFCS has a valid NVM, the “FAST INIT” soft key shall be available during initialization. Pressing the “FAST INIT” soft key shall clear the * from the “FDC DATA XFER”, “AMMO INVENTORY”, “PROP TEMP”, and “TOTAL RESPONSE” fields.

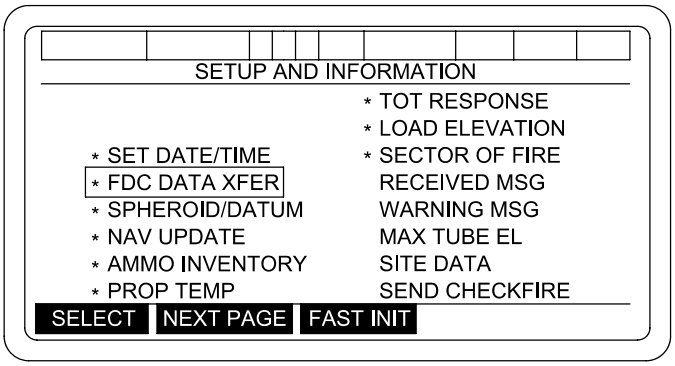


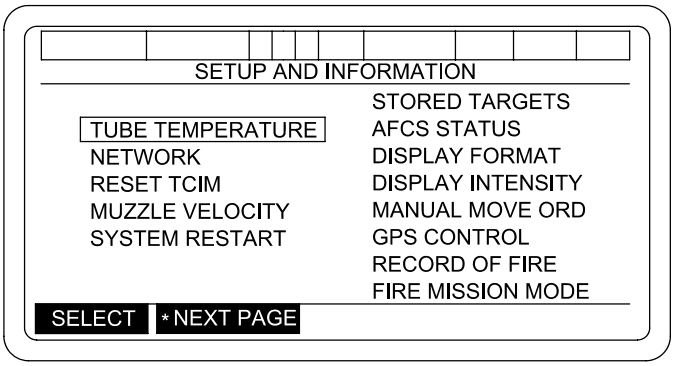


06pc248t

# L-6 AFCS INITIALIZATION - Continued

## L-6.2 Initializing - Continued

Steps of other initialization data entry are done as follows:

(1) SET DATE/TIME Group - This data is required for proper communications and is used for TOT data and other time related tasks and missions. From SETUP AND INFORMATION menu, box in SET DATE/TIME. Press SELECT key. This will cause a SET DATE/TIME Group menu to be displayed. If GPS data is available select "USE GPS". Note, GPS Time is ZULU (Greenwich Mean Time) when "USE GPS" selected, all times will be aligned to ZULU (Local ZULU and GPS). If GPS data is not available or if POC has instructed you not to use GPS proceed as follows:

(a) Enter two digits each for Year, Month, Date, Hour and Minute into boxed-in area.

(b) If a mistake is made prior to typing in all ten digits, press CLR key and try again. If all ten digits have been typed in, then menu will automatically show a SET DATE/TIME GROUP display with prompt.

(c) If incorrect data has been typed in after all 10 digits have been entered, press CANCEL key. This will return display to SET DATE/TIME menu. Then proceed with reentering correct data for Date/Time Group.

(d) To ensure proper time synchronization between the AFCS and POC/FDC, a countdown to MARK should be controlled by the POC. If data is correct when MARK is announced by POC, press MARK key to start the clock. This will return the display to the SETUP AND INFORMATION menu.

(e) Date/Time setting on system - Defaults to system clock if no other input is entered in. FDC and the AFCS messages will be rejected if more than 60 minutes difference between FDC time and AFCS time has elapsed. Unit SOP needs to be in real Date/Time.

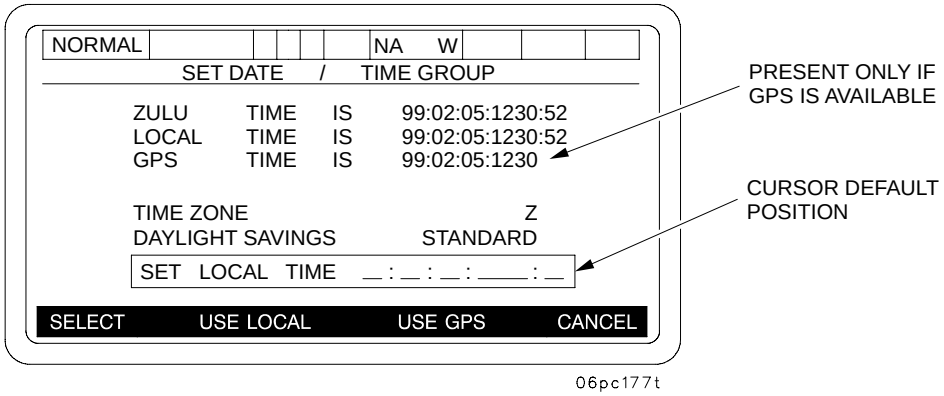


06pc177t

### NOTE

Upon entering the Current DTG, Current Zulu, and Current GPS time, if available, shall be displayed to the operator. Operator must enter Time Zone, Daylight Savings and NEW DTG. The first time the AFCS-XXI program is executed the Zulu and Local time will be calculated from the hardware clock.

# L-6 AFCS INITIALIZATION - Continued

## L-6.2 Initializing - Continued

SELECT TIME ZONE - ENTER SELECT TIME ZONE IN ACCORDANCE WITH UNIT SOP.

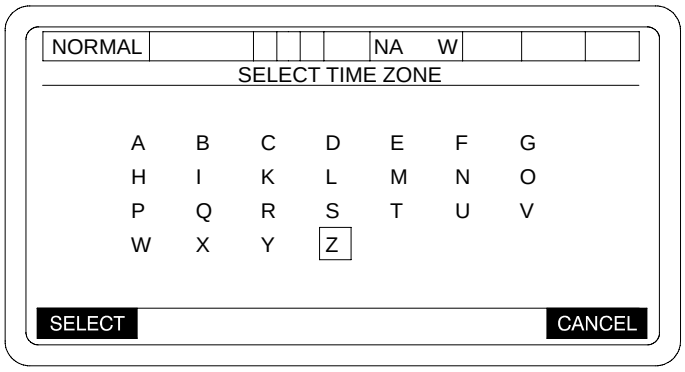


06pc178t

SELECT DAYLIGHT SAVINGS - ENTER SELECT DAYLIGHT SAVINGS TIME IN ACCORDANCE WITH UNIT SOP.

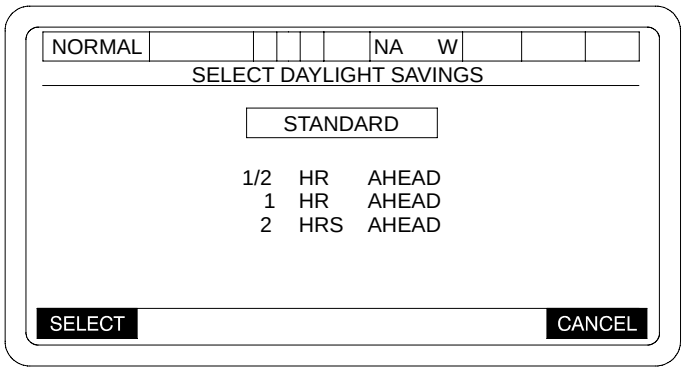


06pc179t

# L-6 AFCS INITIALIZATION - Continued

## L-6.2 Initializing - Continued

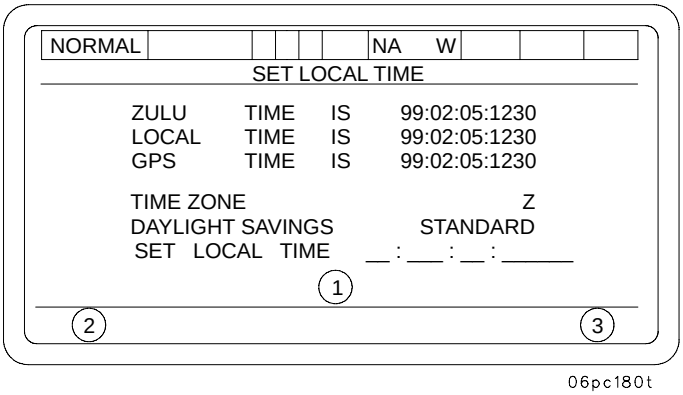


1

TYPE IN NEW DTG - YY:MM:HHMM = Shall appear below the SET LOCAL TIME row upon entry to display above menu. Operator must enter date in format displayed (YY:MM:DD:HHMM). Operator may press CLEAR any time to reset entry.

PRESS MARK TO SET LOCAL TIME = Shall appear below the SET LOCAL TIME row upon entry of the last digit of the minute.

2

MARK = The MARK key shall be displayed upon entry of the last digit of the minute. When the MARK key is pressed the Local Time shall be processed and returned to the SETUP AND INFORMATION menu.

INVALID DTG VALUE ACK = If an invalid DGT is entered, this error shall be displayed to the operator. Press “ACK” and re-enter the date and time.

3

CANCEL = When PRESS MARK TO SET LOCAL TIME is displayed and the CANCEL key is pressed the SET LOCAL TIME entries shall be cleared and the operator shall be able to enter a new LOCAL TIME.

= When the CANCEL key is pressed under all other conditions to display the SETUP AND INFORMATION menu will be displayed.

Date/Time setting on System - Defaults to system clock if no other Input is recorded in FDC and AFCS. Messages will reject if more than 60 minutes has elapsed. Unit SOP needs to be in real Date/Time.

# L-6 AFCS INITIALIZATION - Continued

## L-6.2 Initializing - Continued

### NOTE

The FDC data transfer must be done each time you initialize the AFCS, if the FDC is operational.

(2) FDC DATA XFER - To get initialization data from the POC/FDC, box in FDC DATA XFER and then press SELECT key. This will cause a FDC DATA XFER menu to be displayed with INITIALIZATION already boxed and Operator Alert. Pressing YES key will send a request to POC/FDC for needed data. Data includes: Subscriber File Message, Map Modification Input Message, Computer Meteorological Message, and Registration Data Input Message. This ensures that operator can properly communicate with other subscribers and can compute fire mission accurately. If NO ACK REQ INIT is displayed, contact POC to ensure that proper initialization has taken place. Repeat procedure if required. When initialization is complete, press CANCEL key.

If FDC DATA XFER does not have an *, then pressing the SELECT key will cause a FDC DATA XFER menu to be displayed without INITIALIZATION boxed. Box in INITIALIZATION and press SELECT key to provide the Operator Alert. Pressing YES sends the request to POC/FDC as described above.

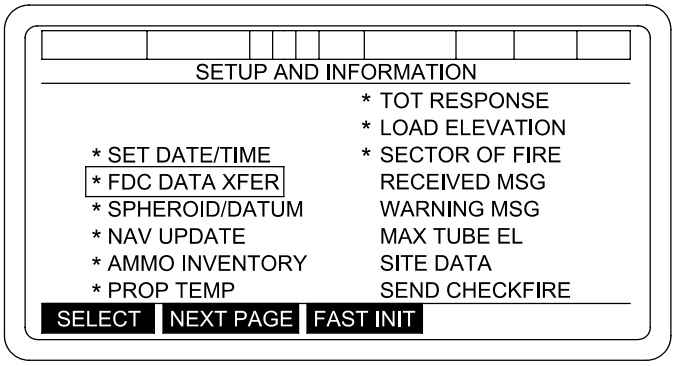


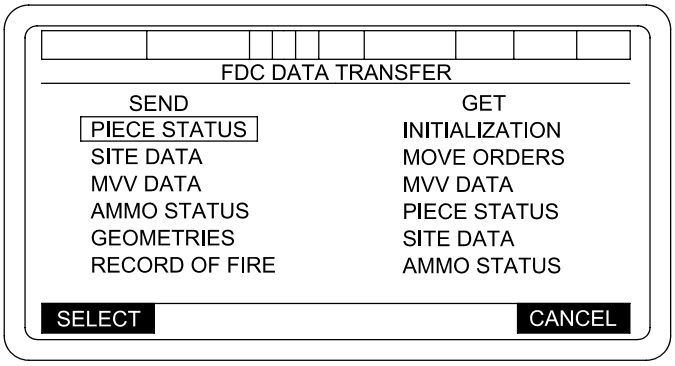


06pc323t

# L-6 AFCS INITIALIZATION - Continued

## L-6.2 Initializing - Continued

(3) SELECT SPHEROID/DATUM -The FDC DATA XFER, INITIALIZATION data includes a SPHEROID/DATUM.

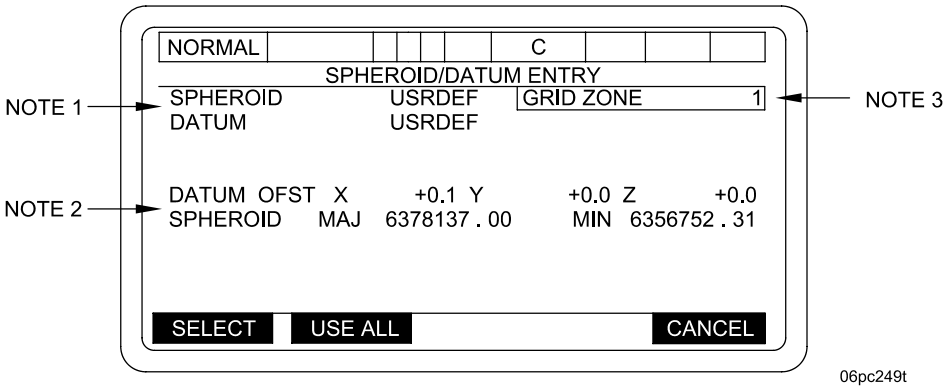


06pc249t

Check to see if all the data is correct. If it is correct, press the USE ALL key, and proceed with the initialization. If an entry is not correct, select that field and make corrections.

NOTE 1 SELECTION OF THIS FIELD WILL DISPLAY SELECT SPHEROID MENU.

NOTE 2 FIELD IS ONLY PRESENT IF USER DEFINED (USRDEF) SPHEROID IS USED. NOT MODIFIABLE.

NOTE 3 WHEN GRID ZONE IS SELECTED THE FOLLOWING WILL BE DISPLAYED:

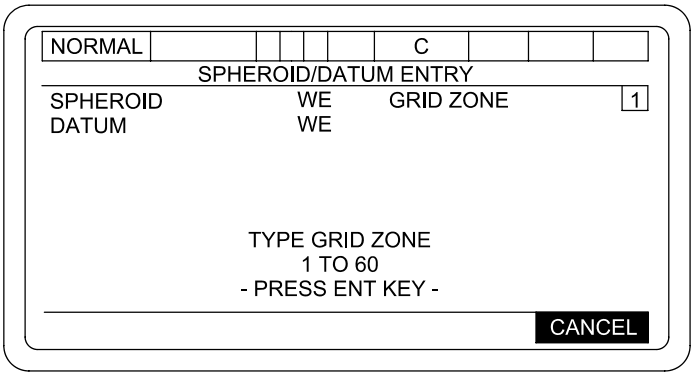


06pc250t

# L-6 AFCS INITIALIZATION - Continued

## L-6.2 Initializing - Continued

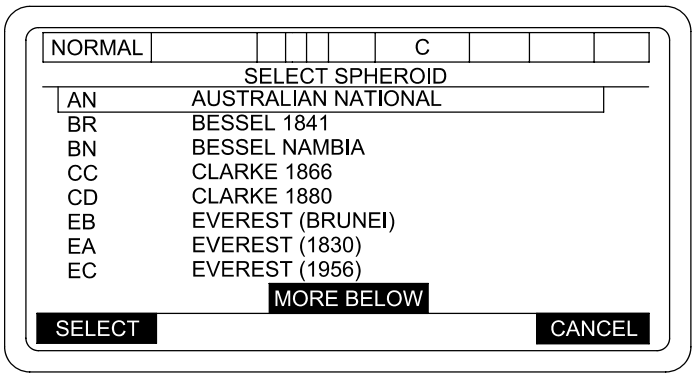


06pc251t

When more than one page is required to display choices, scrolling shall be enabled and “MORE BELOW” or “MORE ABOVE” will be displayed.

Enter the defined SPHEROID, PRESS the SELECT SOFT KEY and the SELECT DATUM menu will be displayed. Refer to Tables in Appendix J.1 for SPHEROID listings.

SOFT KEY SEQUENCING SHALL BE AS FOLLOWS:

1. If USRDEF is boxed in and SELECTED then the ENTER USER DEFINED SPHEROID MAJOR AXIS menu will be displayed.
2. If any other SPHEROID is SELECTED then the SELECT DATUM menu will be displayed to force SELECTION of the DATUM.
3. If CANCEL, then the SPHEROID/DATUM menu will be displayed.

Maps are based upon a “reference datum.” This is really the model of the Earth that the cartographer uses when making a map. The reference datum consists of two parts, the spheroids and the datum offsets.

The Earth is really not a perfectly round globe but is a little “fatter” at the equator. Therefore, the mapmaker uses a spheroid rather than a globe to describe the Earth’s shape. Instead of just using one radius as one would do to describe a globe, two values are used. The first is the semi-major axis. It is the radius of the Earth at the equator. The second number is the semi-minor axis. It is the distance from the center of the Earth to the poles. It is slightly smaller than the semi-major axis. (The WGS 84 model of the Earth uses a semi-major axis of 6,378,137 meters and 6,356,752 meters for the semi-minor axis).

The cartographer may choose to base his model of the Earth’s surface using a center point that is different from the true center of the Earth. This offset of the center point is described by three “datum offset” values: delta X, delta Y, and delta Z. These values are typically a few hundred meters.

There are many standard spheroid and datums commonly used for maps. If the spheroid/datum is not supplied by a message from FDC, the AFCS operator will be told to select a certain spheroid and datum at the display unit. The starting point for entering this data is the SPHEROID/DATUM display.

The spheroid is selected using the SELECT SPHEROID sub-display. This display lists choices. It is possible to use spheroid values different from the ones in the display lists. The different values are entered as “user defined.” This is selected by the USRDEF option listed as a choice for a spheroid. If the operator selects USRDEF, other sub-displays prompt him to enter the semi-major and semi-minor axis. These values must be obtained from the POC and should only be used with guidance from Battery Commander.

# L-6 AFCS INITIALIZATION - Continued

## L-6.2 Initializing - Continued

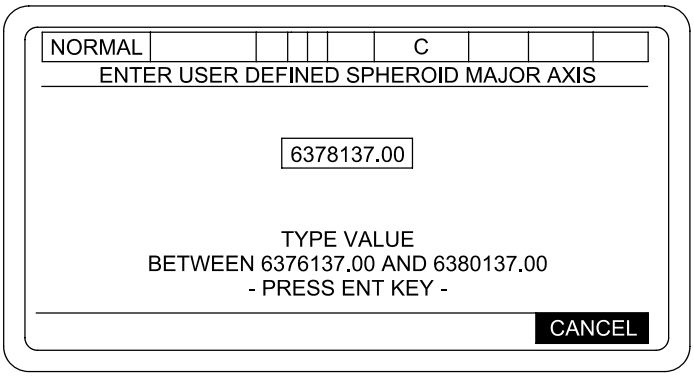


06pc252t

1. Any unedited DATA fields remain at their current values when ENT is pressed.
2. Enter the appropriate value and press ENT key. The USER DEFINED SPHEROID MINOR AXIS menu will be displayed.
3. If the CANCEL key is selected, the SELECT SPHEROID menu will be displayed.

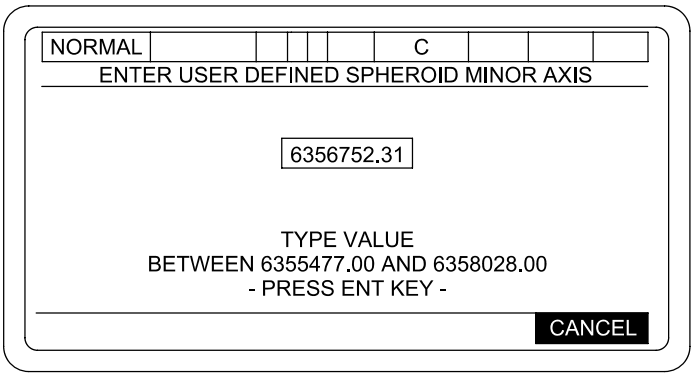


06pc252ta

1. Any unedited DATA fields remain at their current values when ENT is pressed.
2. Enter the appropriate value and press ENT key. The CONFIRM USER DEFINED SPHEROID AXIS menu will be displayed.
3. If the CANCEL key is selected, the ENTER USER DEFINED SPHEROID MAJOR AXIS menu will be displayed.

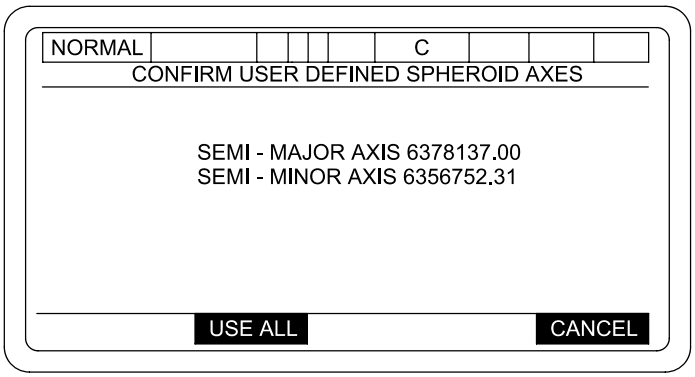


06pc252tb

# L-6 AFCS INITIALIZATION - Continued

## L-6.2 Initializing - Continued

Soft key sequencing shall be as follows:

If CANCEL, then ENTER USER DEFINED SPHEROID MINOR AXIS menu will be displayed.

If USE ALL, then the SELECT DATUM menu will be displayed.

The datum offset is selected using the SELECT DATUM sub-display. This display lists valid choices listed by an alphabetic code. It is possible to use datum offset values different from the ones in the display lists. The different values are entered as "user defined." This is selected by the USRDEF option listed as a choice for a datum offset. The datum offset values are entered using the ENTER USER DATUM PARAMETERS sub-display. The offset values are listed as DATUM OFFSET X, Y, and Z.

There is a restriction on the use of user defined spheroid and datum. The operator cannot use a new user defined spheroid if current spheroid selection is user defined. Likewise, the operator cannot select a new user defined datum selection if the current datum selection is user defined. If the operator wants to go from a user defined datum to a new user defined datum, the operator should simply select any standard datum and then enter the new user defined. Likewise, if the operator wants to go from a user defined spheroid to a new user defined spheroid, the operator should simply select any standard spheroid and then enter the new user defined.

When DATUM is selected, SELECT DATUM menu is displayed:

**NOTE**

The DATUMS displayed are dependant on the SPHEROID selected.

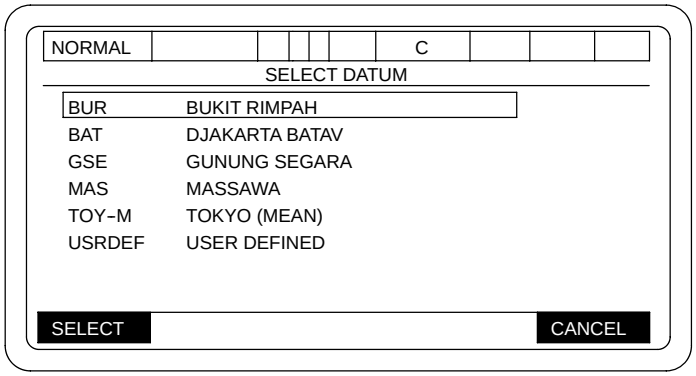


06pc253t

If CANCEL then the SPHEROID/DATUM ENTRY will be displayed

When more than one page is required to display choices, scrolling shall be enabled and "MORE BELOW" or "MORE ABOVE" will be displayed.

Box in the correct DATUM and press the SELECT key. The DATUMs available are dependent on the SPHEROID selected. See Appendix J.1.

**NOTE**

The reference frame for UTM position coordinates is a DATUM. Typically, a local DATUM is defined by an ellipsoidal Earth model (SPHEROID) and a starting point (origin) for the coordinate system. Coordinates on a map or in a Trig list (SCPs) often are on a Local DATUM. An example of a Local DATUM is the North American 1927 (NAD 27) DATUM used in the United States.

# L-6 AFCS INITIALIZATION - Continued

## L-6.2 Initializing - Continued

There have been many different Local DATUMs developed. GPS computes position on the World Geodetic System 1984 (WGS 84), a worldwide coordinate system. To use GPS with coordinates on a Local DATUM, the coordinates must be mathematically shifted. The AFCS (DRUH and PLGR) can automatically perform DATUM shifting, but first the operator must select the Local DATUM to be used, or provide the appropriate shift parameters. For AFCS operation, Local DATUMs are represented by two sets of parameters: the Local Ellipsoid (SPHEROID) and shift parameters as defined for each Local DATUM (DATUM IDs).

The FDC can provide the SPHEROID. The SPHEROID selected will determine which DATUM IDs will be available for selection. The AFCS/FDC SPHEROID and DATUM TABLE provides the SPHEROID number for the AFCS and FDC, which DATUM IDs are available for that SPHEROID number and the normal coverage area. Note that there may be more than one DATUM ID associated with a Local DATUM because the shifts vary by locality. For other DATUMs or areas outside the indicated coverage area, User Defined (USRDEF) Datum shifts may be entered manually. The table is not intended as an absolute. A map sheet will identify the DATUM name, Ellipsoid (SPHEROID) name and the coordinate type, or the map sheet will identify the area. The data from a Trig list should identify the same information. These parameters must be correlated to the DATUM ID. If the applicable DATUM hasn't been programmed in the AFCS, shift parameters for many other DATUMs and regions have been published in DMA TR 8350.2 and may be entered thru the DATUM X, Y, and Z OFFSETs. Note that the AFCS cannot accept shift parameters for all DATUMs because its SPHEROID capability is limited to those listed in the AFCS/FDC Table (Appendix J.1).

If the DATUM USRDEF is selected, then the DATUM X, Y, and Z offsets must be entered. These values must be obtained from the POC and should only be used with guidance from Battery Commander.

The ENTER USER DATUM PARAMETERS page should look like:

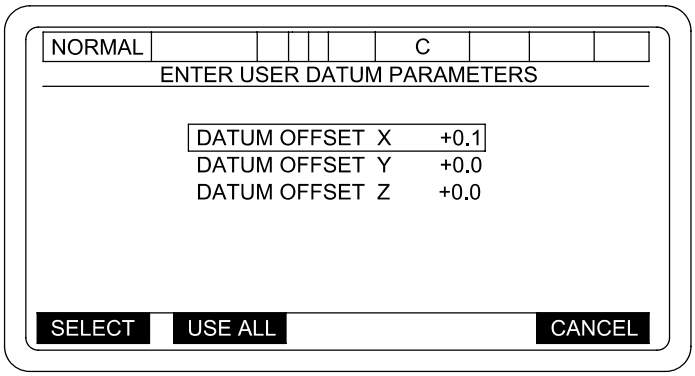


06pc254t

- When field selected:
  TYPE OFFSET
  BETWEEN -2000.0 AND +2000.0
  -PRESS ENT KEY-
- When field selected: + / -
  Otherwise: USE ALL
- When no fields are selected: SELECT
  Otherwise: BLANK

# L-6 AFCS INITIALIZATION - Continued

## L-6.2 Initializing - Continued

### NOTE

- Any un-edited DATA fields remain at their current values when USE ALL KEY is pressed.
- SOFT KEY sequencing shall be as follows:
  - If CANCEL , then the SELECT DATUM menu will be displayed.
  - If USE ALL , then the ENTER SPHEROID/DATUM ENTRY menu will be displayed.

### NOTE

If **CANCEL** is selected, all information up to this point will be deleted.

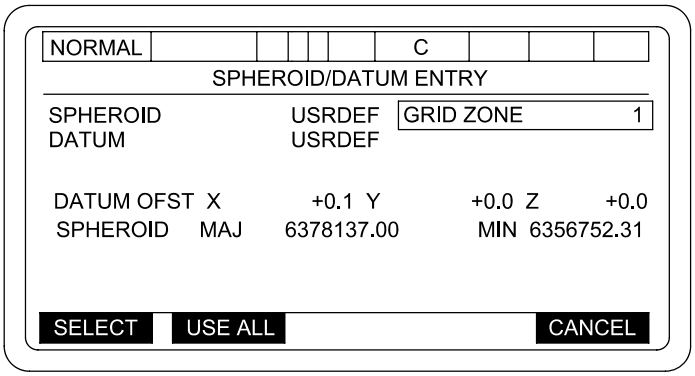


06pc270t

If **USE ALL** , all information will be locked in and the SETUP AND INFORMATION MENU will be displayed.

# L-6 AFCS INITIALIZATION - Continued

## L-6.2 Initializing - Continued

(4) NAV UPDATE – Navigation Subsystem Update is performed as follows:

(a) With the Gun Tube in Travel Lock, park the howitzer at a known Survey Control Point (SCP) with the left sprocket within one meter of SCP.

(b) Box in *NAV UPDATE and press the SELECT soft key. This will bring up the NAVIGATION SUBSYSTEM UPDATE menu.

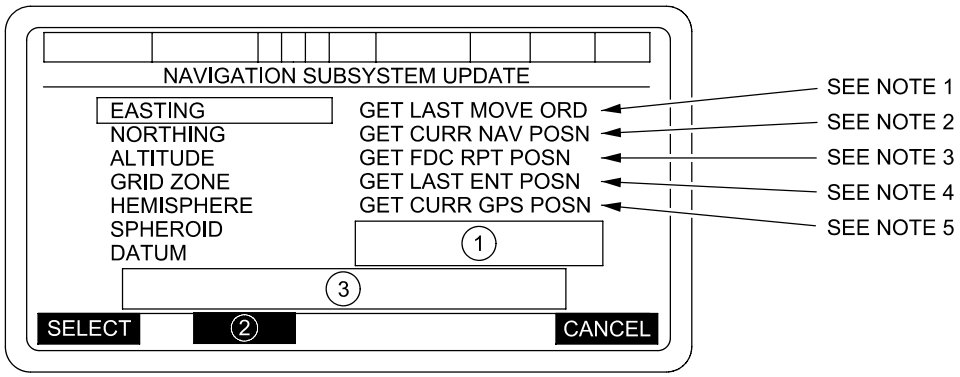


06pc188ta

**NOTE**

The datum to be used is selected from the SETUP AND INFORMATION menu (Enter MAP/DATUM menu)

(1) This field contains OPERATOR PROMPTS and selections which depend on the current status of the NAVIGATION SUBSYSTEM

(2) When ALTITUDE SELECTED – **+/-**

otherwise – **USE ALL**

(3) This field contains OPERATOR PROMPTS for updating the values of: EASTING, NORTHING, ALTITUDE, and GRID ZONE:

When EASTING is selected:
Type EASTING 0 to 999999
Press ENT key

When NORTHING is selected:
Type NORTHING 0 to 10000000
Press ENT key

When ALTITUDE is selected:
Type ALTITUDE –1,000 to 10,000
Press ENT key

When GRID ZONE is selected:
Type GRID ZONE 1 to 60
Press ENT key

HEMISPHERE = NORTH or SOUTH
SPHEROID = 1 . . 9 and A . . I and USRDEF (not modifiable by operator)
DATUM = See Table in Appendix J.1 (not modifiable by operator on this display)

## L-6 AFCS INITIALIZATION - Continued

### L-6.2 Initializing - Continued

NOTE 1: Blank if no Move Order occurred since the last power up of the AFCS.

NOTE 2: Blank when Navigation Subsystem is not available.

NOTE 3: Available if position data has been sent from the FDC. Selection disappears when AFCS operator performs Nav Update or Move Order.

NOTE 4: Last coordinates on which position update was performed. Blank if operator has pressed the ARRIVED key at a position area since the last position update.

NOTE 5: Field is blank when the following conditions exist:

a. Navigation subsystem functionality not currently available.

b. GPS position data not currently available from the Navigation subsystem.

c. The GPS position data currently available has an estimated probable error greater than the navigation devices' "poor GPS data limit".

If the available GPS data has an estimated probable error greater than the Navigation device "Good GPS data limit", but less than or equal to the navigation device "Poor GPS data limit" when this menu item is selected, then the following alert will be placed on the soft key line:

USE DGRD GPS DATA? YES NO

If the YES soft key is pressed, then the available GPS data shall be used to update the listing, Northing, and Altitude fields on the menu. If the NO soft key is pressed, then the Easting, Northing, and Altitude fields on the menu will not be updated with the available GPS data.

**NOTE**

Use in accordance with unit SOP.

(c) RESTART REQUIRED - This prompt will appear in field (1). With the gun tube in travel lock, the Howitzer must be positioned at a Survey Control Point (SCP) with the left front sprocket within one meter on the SCP. No selection of RESTART REQUIRED is required, it will happen automatically and a full alignment will be performed. Enter the SCP data of EASTING, NORTHING ALTITUDE and GRID ZONE. When all data is entered, double check the SCP coordinates and SPHEROID/DATUM and HEMISPHERE displayed on the screen. If it is not correct, make any correction. If it is correct, press the USE ALL soft key. The following prompt will be displayed:

"NAV POSITION UPDATE ABOUT TO START" "ARE YOU SURE" "YES" "NO"

Press the "YES" soft key, and the Navigation Position Update will be started. The SETUP AND INFORMATION menu will appear. The prompt "CMD" will appear in field (6), and then be replaced by the Align Time to Go countdown. Proceed with the rest of Initialization.

(d) NAV POSITION UPDATE - If this prompt is displayed in field (1), then only a Navigation Subsystem Position Update is required. With the gun tube in travel lock, the Howitzer must be positioned at a Survey Control Point (SCP), with the left front sprocket within one meter of the SCP. Enter the SCP data of EASTING, NORTHING and ALTITUDE. When all data is entered, double check the SCP coordinates and SPHEROID/DATUM, GRID ZONE and HEMISPHERE displayed on the screen. If it is not correct, make any correction. If it is correct, press the USE ALL soft key. The following prompt will be displayed:

"NAV POSITION UPDATE ABOUT TO START" "ARE YOU SURE" "YES" "NO"

Press the "YES" soft key, and the Navigation Position Update will be started. The SETUP AND INFORMATION menu will appear. The prompt "CMD" will appear in field (6), and then be replaced by the Align Time to Go countdown. Proceed with the rest of Initialization.

# L-6 AFCS INITIALIZATION - Continued

## L-6.2 Initializing - Continued

(e) NAV RESTART – If the prompt NAV POSITION UPDATE is highlighted and selected, a message prompt “CHANGE TO RESTART” “YES” “NO” will appear. Press the “YES” soft key. “FORCE NAV RESTART” will appear. Press “USE ALL” then press the “YES” soft key to “ARE YOU SURE” prompt, the SETUP AND INFORMATION menu will be displayed and CMD will be displayed in field (6). This will be replaced with the Align Time to Go count down timer. The Navigation Subsystem aligns itself automatically.

**NOTE**

The Navigation Subsystem has 3 modes of alignment; Stored Heading Alignment, Normal Alignment and Dynamic Alignment.

(1) Stored Heading Alignment – Will occur only if the previous AFCS shutdown was orderly and the Howitzer or Turret has not moved since the last shutdown. This Alignment will take a maximum of 90 seconds, and will start as soon as the power is applied to the Navigation Subsystem. A NAV UPDATE is still required. But since the Howitzer has not moved since the last shutdown, all the NAV UPDATE data should be correct and only pressing the USE ALL soft key is required. If the Howitzer has been moved since the last shutdown, or the last shutdown was abnormal, or the Howitzer was moving during the last shutdown procedure, the Stored Heading Alignment will automatically be rejected and after a NAV UPDATE is performed the Navigation Subsystem will automatically perform a Normal Align.

(2) Normal Alignment – Will occur when ever a Stored Heading Alignment cannot be performed. This alignment will take a maximum of 15 minutes (900 seconds). After the NAV UPDATE is performed and accepted, the Normal Alignment will automatically start, and the Align Time to Go counter will start counting down to 0. During the countdown, a message “OK TO MOVE OR SHOOT” “ACK” may appear before the countdown reaches 0. This means the Navigation Subsystem estimated Azimuth Error is within the bounds that are safe to move or shoot. At this point, a Move Order or Fire Missions may be performed. If the PLGR data is valid (i.e. the “A” is gone) the Align Time to Go counter will continue to countdown while the Howitzer is moving. If the PLGR is not valid (i.e. “A” is on), the timer will stop counting during movement and ZUPTs will be requested.

(3) Dynamic Alignment – A Dynamic Alignment is nothing more than a moving Normal Alignment, but the following conditions must be met: The PLGR must have data (i.e. the “A” is gone) and a NAV UPDATE must have been performed prior to movement. If these conditions are true, then the Howitzer may be moved before the “OK TO MOVE OR SHOOT” “ACK” is displayed. Move Orders and Fire Missions cannot be performed, but as long as the PLGR is valid (i.e. the “A” is gone), the Align Time to Go timer will continue to countdown and the Navigation Subsystem will not require a RESTART. Moving prior to the “OK TO MOVE OR SHOOT” “ACK” must be done in accordance with Unit SOP.

# L-6 AFCS INITIALIZATION - Continued

## L-6.2 Initializing - Continued

**NOTE**

AFCS supports two modes of Navigation Update; a Position Update and a Navigation Subsystem Restart. Normally, the Navigation Subsystem will align itself automatically, so only a Position Update is required.

(f) To perform a Nav Position Update, if entries are correct per unit SOP. If incorrect, this indicates that FDC DATA Transfer of the Map Mod was not successful in the previous step; press CANCEL, to return to the SETUP AND INFORMATION menu and repeat the FDC DATA XFER procedure to get initialized by FDC. If GRID ZONE, HEMISPHERE and SPHEROID entries are correct, then enter, in turn, EASTING, NORTHING, and ALTITUDE as follows: for each item, first box in the item, then press SELECT key. Use keypad to type in value. Press ENT key. Press USE ALL to complete the NAV UPDATE and return to the SETUP AND INFORMATION menu.

If invalid data is entered, the Navigational System will reject it and ask for data re-entry. Press ACK key to acknowledge Alert and re-enter data.

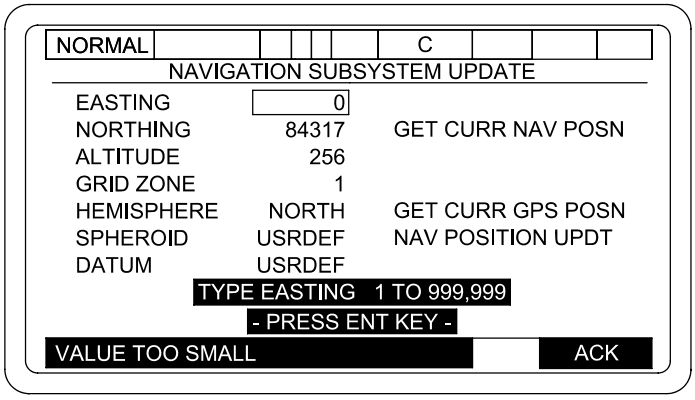


06pc324t

(5) AMMO INVENTORY - Ammunition inventory must be done before the AFCS will accept a fire mission. Inventories must be complete and accurate before the system initialization is completed. The three parts of the inventory records, Shells, Propellants, and Fuzes, are updated as follows:

# L-6 AFCS INITIALIZATION - Continued

## L-6.2 Initializing - Continued

(a) Box in AMMO INVENTORY from the SETUP AND INFORMATION menu. Then press SELECT key. This will cause an INVENTORY MANAGEMENT menu to be displayed. Box in either EDIT CURRENT PALADIN or EDIT FDC PROVIDED data. Press SELECT key. This will cause an INVENTORY MANAGEMENT menu to be displayed.

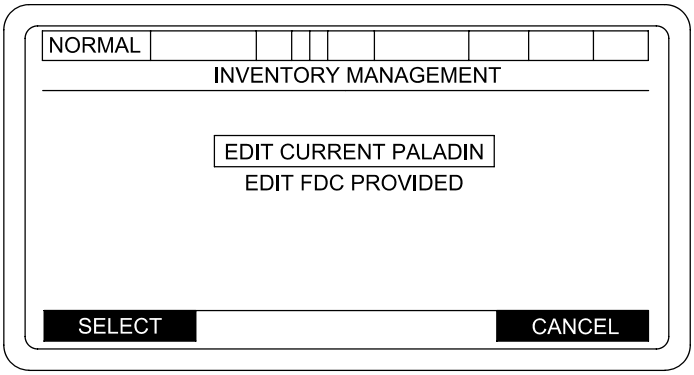


06pc654m

**NOTE**

- This menu will not be displayed when FDC provided inventory data is not available at the AFCS.
- You can request the POC to provide your Ammo Inventory from the FDC if you know it is a correct count. Use FDC DATA XFER to GET AMMO STATUS (para L-6.2k(2)).

# L-6 AFCS INITIALIZATION - Continued

## L-6.2 Initializing - Continued

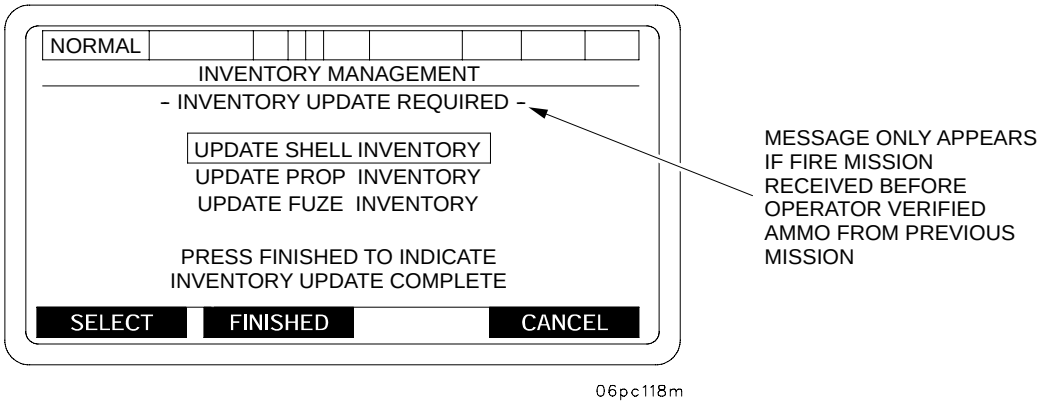


**NOTE**

If a Fire Mission is activated while in any of the ammunition inventory submenus, all valid complete entries will be saved.

FINISHED = When the Finished key is pressed the ammunition inventory shall be reviewed to insure each group of projectiles has at least one propellant and each group of propellants has at least one projectile. If a projectile is found without a propellant or a propellant without a projectile, the AFCS will display Projectile/Propellant Mismatch menu.

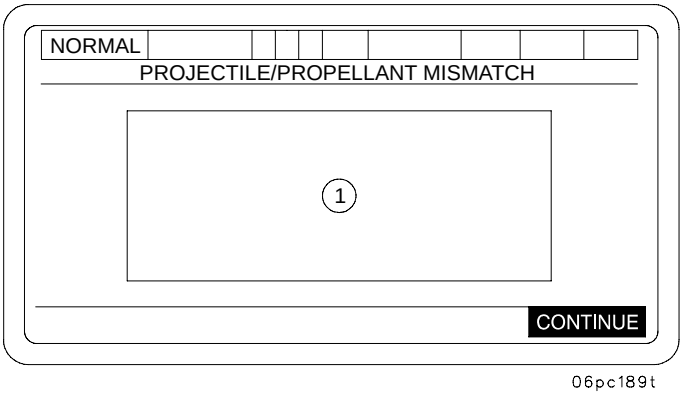


CONTINUE = Will display INVENTORY MANAGEMENT menu.

1 = NO "US" PROJECTILE MATCH and or
NO "US" PROPELLANT MATCH

**NOTE**

Use Up and DOWN keys to scroll.

# L-6 AFCS INITIALIZATION - Continued

## L-6.2 Initializing - Continued

(b) Box in UPDATE SHELL INVENTORY. Press SELECT key. This will cause an UPDATE SHELL INVENTORY menu to be displayed.

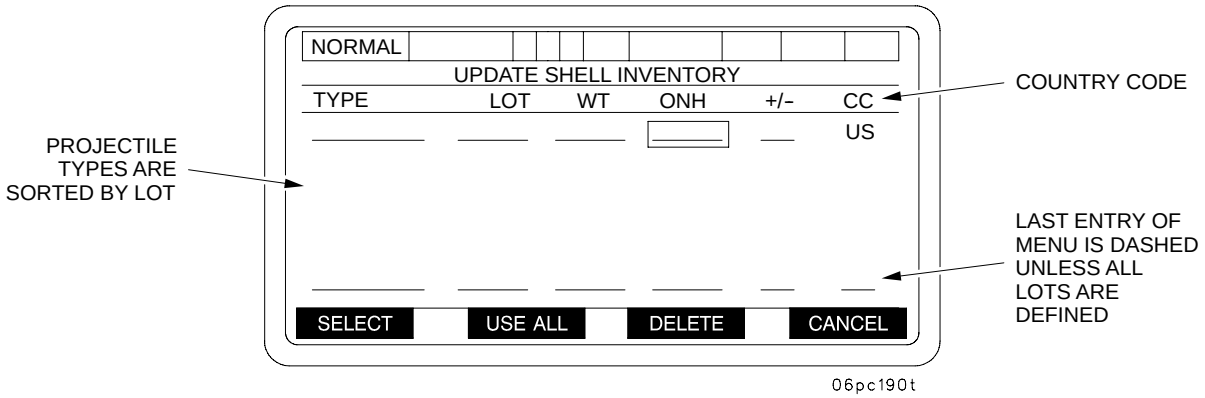


**NOTE**

Pressing the DELETE key will cause the selected shell to be deleted from inventory no matter where on the inventory line the selection box is positioned.

If the operator presses the "DELETE" key or attempts to modify the lot for a shell that is currently being used for a fire mission, the AFCS operator warning "UNALLOWED - USED BY FM" "ACK" will be displayed.

(c) To add a new entry, box in the first blank line. Press SELECT key. This will cause an UPDATE SHELL INVENTORY-SELECT SHELL TYPE menu to be displayed.

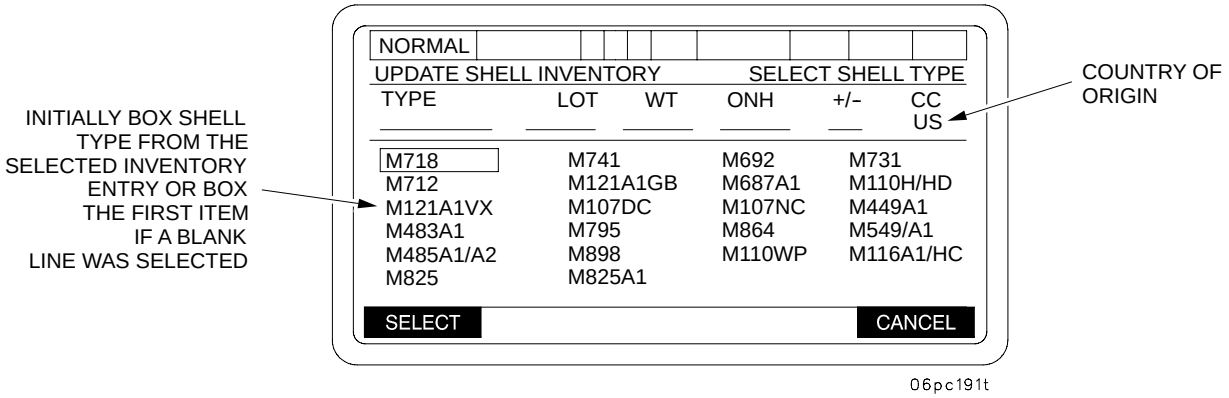

# L-6 AFCS INITIALIZATION - Continued

## L-6.2 Initializing - Continued

(d) Press SELECT key to display a SELECT LOT menu.

(e) Box in Lot choice and press SELECT key. This will cause a lot designator to be assigned to the selected shell. Once a lot selection is made, that designator (letter) will disappear. This prevents using same lot twice.

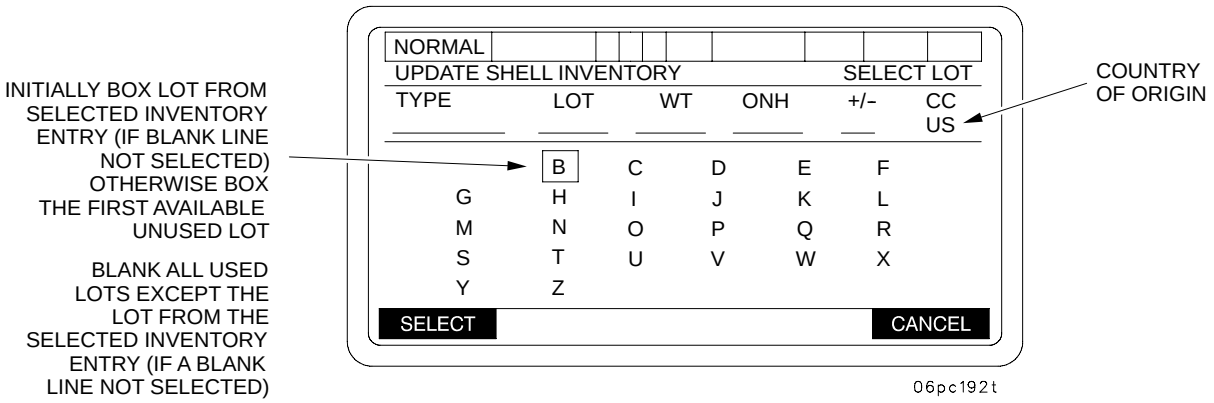


(f) Box in WT choice and press SELECT key; an ENTER SHELL WEIGHT menu will be displayed. If shell weight is not the same as default weight, type in new weight and press ENT key. This will cause the UPDATE SHELL INVENTORY menu to be displayed.

**NOTE**

Weight will be displayed in pounds or squares.

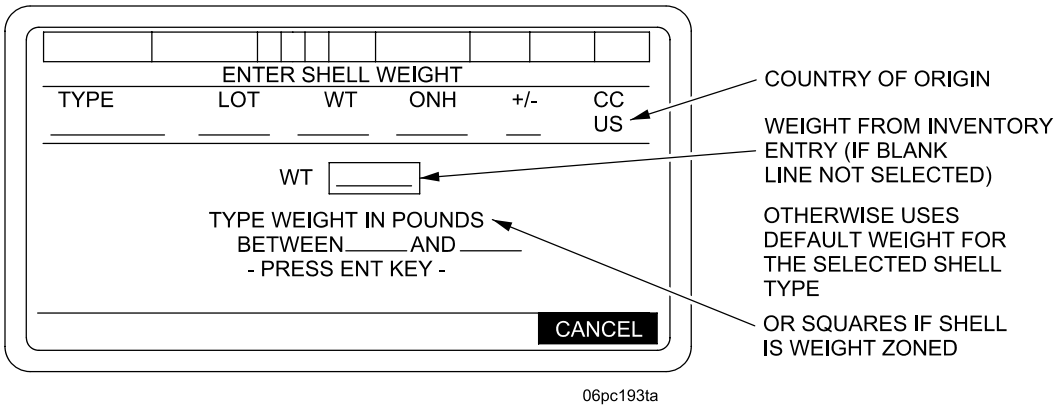

# L-6 AFCS INITIALIZATION - Continued

## L-6.2 Initializing - Continued

(g) Move box to proper column (ONH, ADD or SUB) in desired line and press SELECT key. A prompt to TYPE SHELL QUANTITY will be displayed. Type in new quantity and press ENT key. New quantity will be displayed.

(h) When all shell data has been updated or edited, press USE ALL key to return to INVENTORY MANAGEMENT menu.

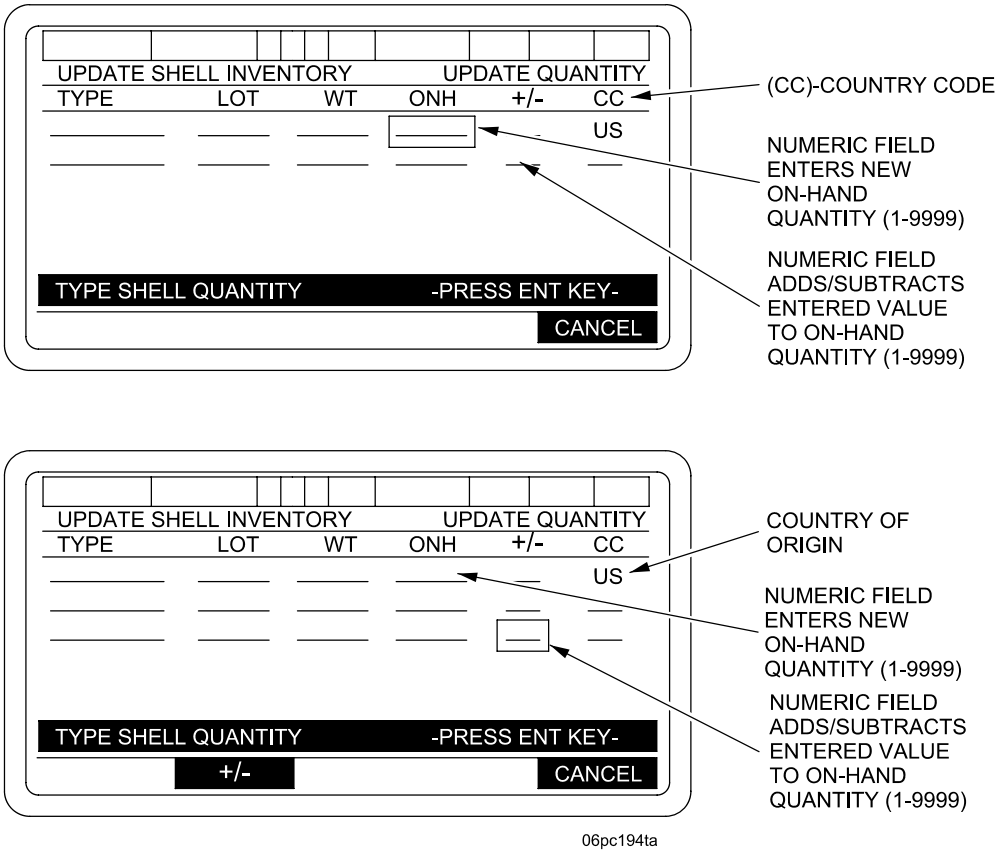


06pc194ta

# L-6 AFCS INITIALIZATION - Continued

## L-6.2 Initializing - Continued

(i) Box in UPDATE PROP INVENTORY on INVENTORY MANAGEMENT (UPDATE) menu. Press SELECT key to display UPDATE PROP INVENTORY menu.

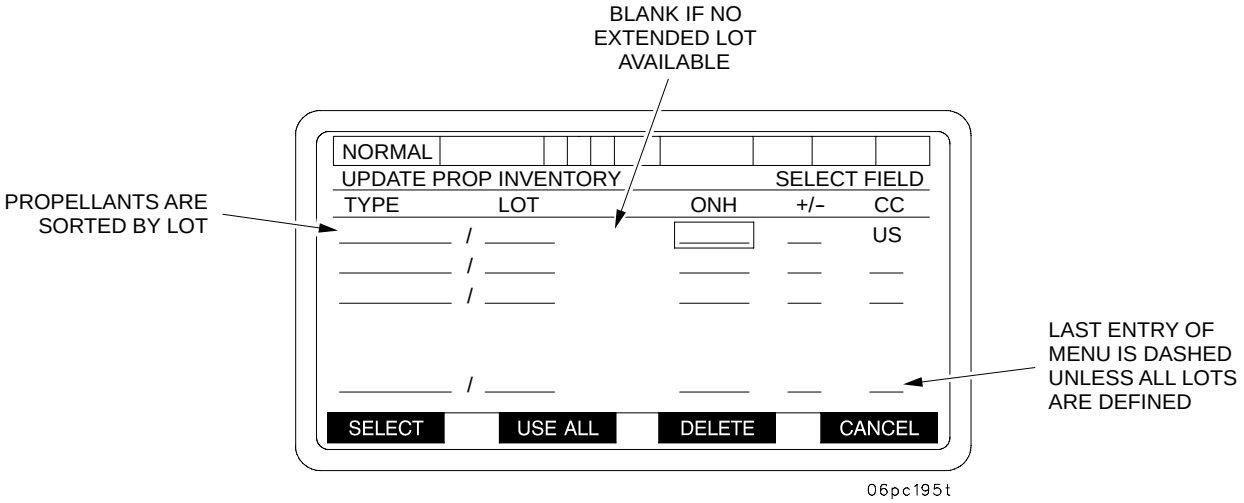


### NOTE

- The DELETE key shall cause the selected propellant to be deleted from inventory no matter where on the inventory line the selection box is positioned.
- If the operator presses the “DELETE” key or attempts to modify the lot for a propellant that is currently being used for a fire mission, the AFCS shall display the operator warning “UNALLOWED - USED BY FM” “ACK”.

(j) To add a new entry, box in the first blank line on UPDATE PROP INVENTORY menu. Press SELECT key to display SELECT PROP TYPE menu. Box in propellant type and press SELECT key.

### NOTE

The data displayed on the third line of this display is that given in the selected inventory entry (either a blank line or an existing entry) and is updated as entries are made.

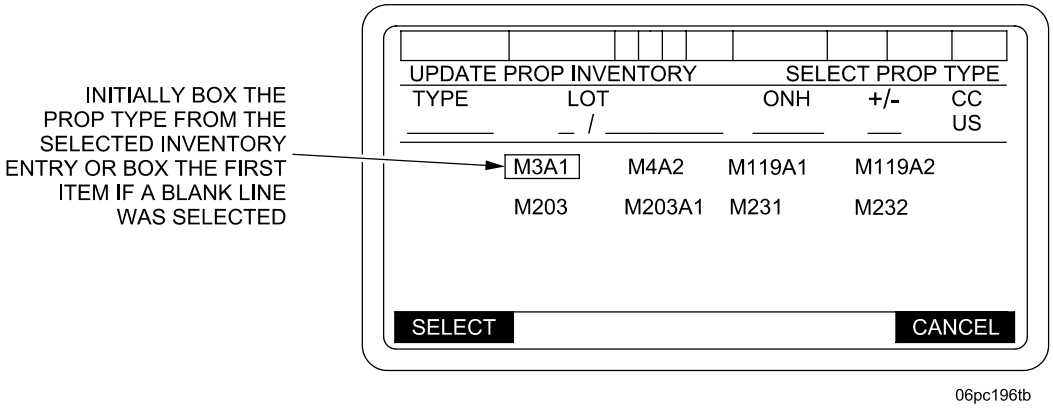

# L-6 AFCS INITIALIZATION - Continued

## L-6.2 Initializing - Continued

(k) When the SELECT key on the Select Prop Type screen is pressed the ENTER LOT menu will be displayed.

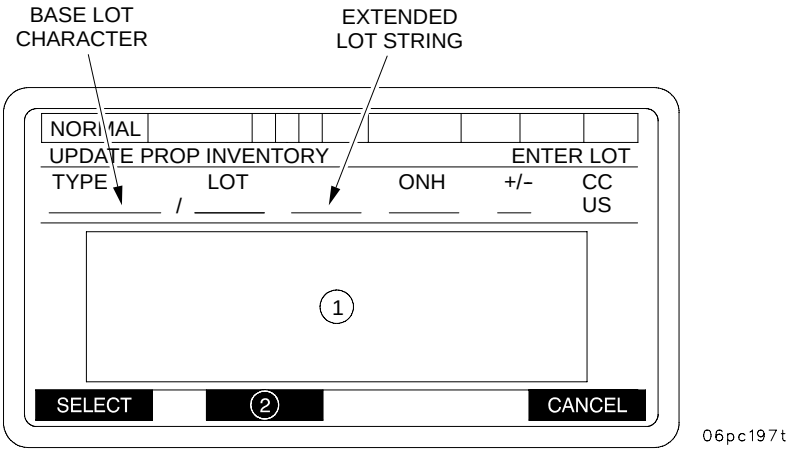


(1) On initial entry to this display, the cursor box is on the base lot from the selected inventory entry (if a blank line was not selected). Otherwise, box the first available unused base lot letter. The base lot location in the upper display is highlighted in reverse video. All base lots currently in the propellant inventory are deleted from the selection area (except for the selected inventory entry base lot if not on a blank inventory line).

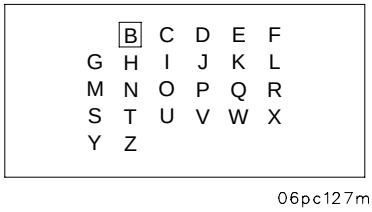


After the base lot is selected, the extended lot editing function is entered. All alphabetic characters as well as numeric, virgule, hyphen, and highlight movement characters are made available for operator selection. The operator will be allowed to enter blanks while editing the extended lot string, but they will be removed when the operator selects "USE ALL". The reverse video highlight is initially moved to the first character position (left most character) in the extended lot string. Highlight movement will wrap at the ends of the extended lot string. Pressing the CLR key will erase the character under the reverse video highlight.

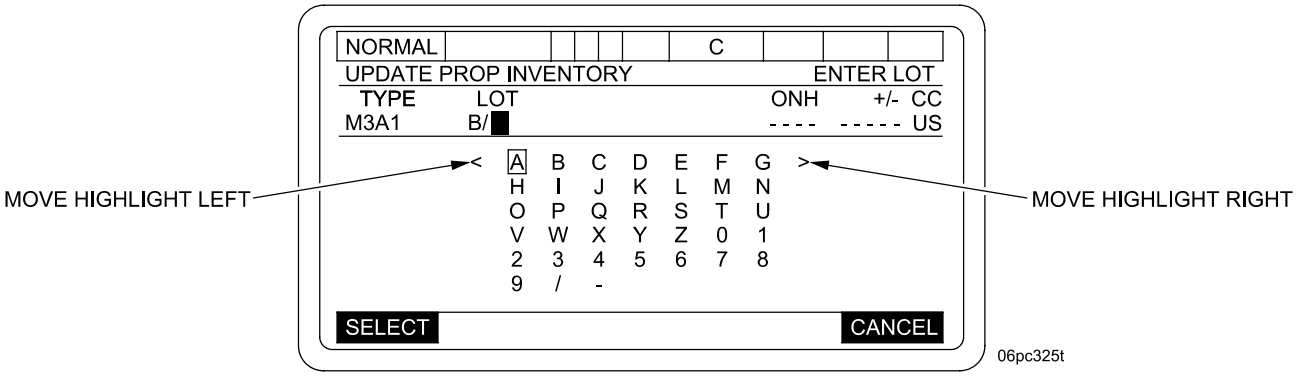


(2) Blank - until extended lot string editing begins.
USE ALL - while editing the extended lot string.

# L-6 AFCS INITIALIZATION - Continued

## L-6.2 Initializing - Continued

When USE ALL key is pressed the following checks occur:

- The extended string is compared with other extended lot codes in inventory. If a duplicate extended lot string is found, a short error message will be displayed.

  DUPLICATE EXTENDED LOT FOUND | ACK

  When ACK is pressed, the extended lot editing function will be resumed and the highlight will be at the last character position prior to pressing USE ALL. Before pressing USE ALL, enter a different extended lot.

- The extended lot string is compared with other extended codes in the MVV Lot Database. If a duplicate extended lot string is found and there is a propellant model mismatch, the error message

  MVV EXTENDED LOT PROP CONFLICT | ACK

  shall be generated. When ACK is pressed, the extended lot editing function shall be resumed and the highlight shall be at the last character position prior to pressing USE ALL.

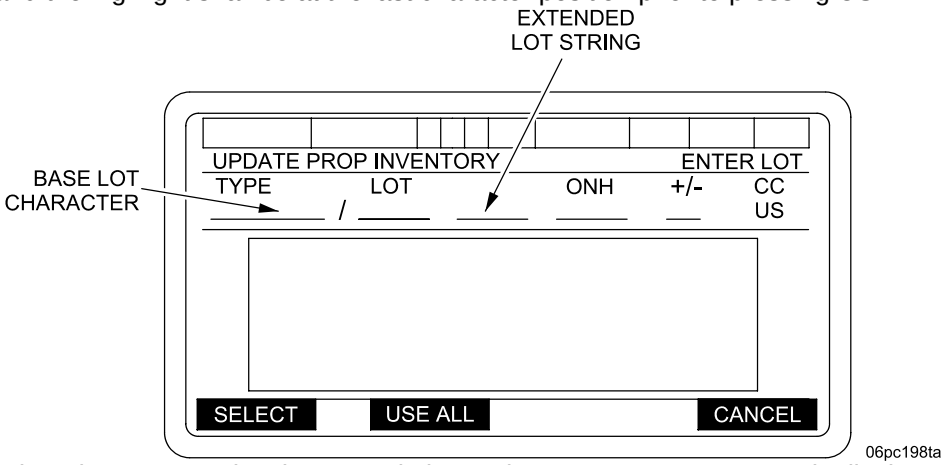


(l) When the USE ALL key is pressed, the Update Prop Inventory menu is displayed. Box in either +/- column and press SELECT key. Type in new quantity and press ENTER key. New quantity will be displayed.

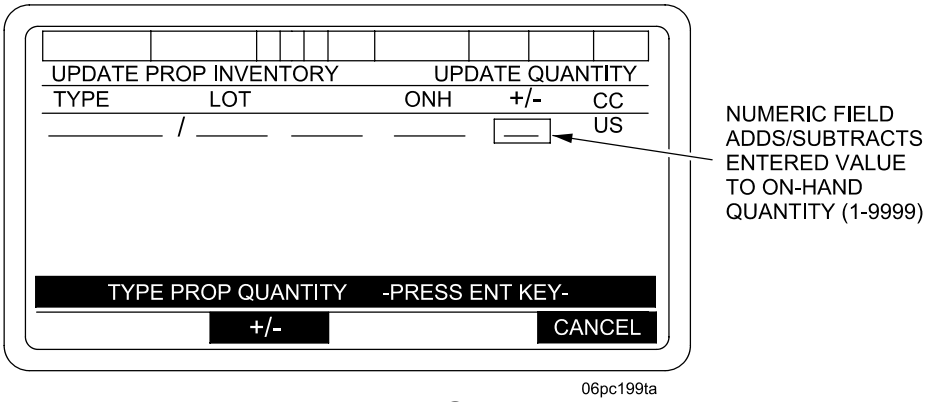


**NOTE**

- The +/- soft key will appear when the +/- column is selected. If you select the ONH column, the +/- soft key will not appear.
- Minus values must not exceed the amount on-hand. Plus values must not cause the on-hand total to exceed 9999. Either of these conditions shall cause the error message: "VALUE TOO SMALL" "ACK" or "VALUE TOO BIG" "ACK".

# L-6 AFCS INITIALIZATION - Continued

## L-6.2 Initializing - Continued

(m) When propellant types have been updated or edited, press USE ALL key. This will cause the INVENTORY MANAGEMENT menu to be displayed.

(n) Box in UPDATE FUZE INVENTORY on INVENTORY MANAGEMENT menu. Press SELECT key to display UPDATE FUZE INVENTORY - SELECT FIELD menu. To add a new entry, move box to the first blank line. Press SELECT key. A SELECT FUZE TYPE menu will be displayed.

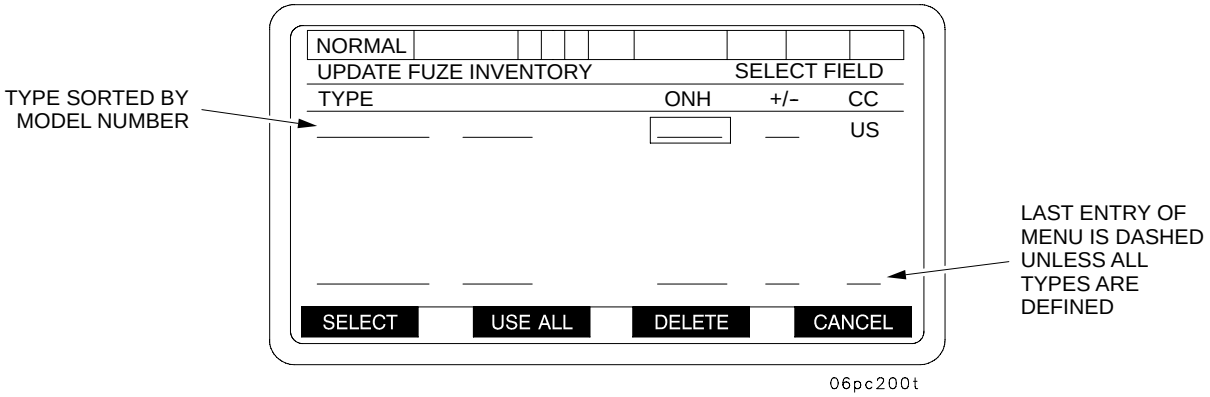


### NOTE

- The DELETE key shall cause the selected fuze to be deleted from inventory no matter where on the inventory line the selection box is positioned.
- If the operator presses the "DELETE" soft key or attempts to modify the fuze model that is currently being used for a fire mission, the AFCS shall display the operator warning "UNALLOWED - USED BY FM" "ACK".

(o) Box in FUZE TYPE and press SELECT key.

### NOTE

The data displayed on the third line of this display is that given in the selected inventory entry (either a blank line or an existing entry) and is updated as entries are made.

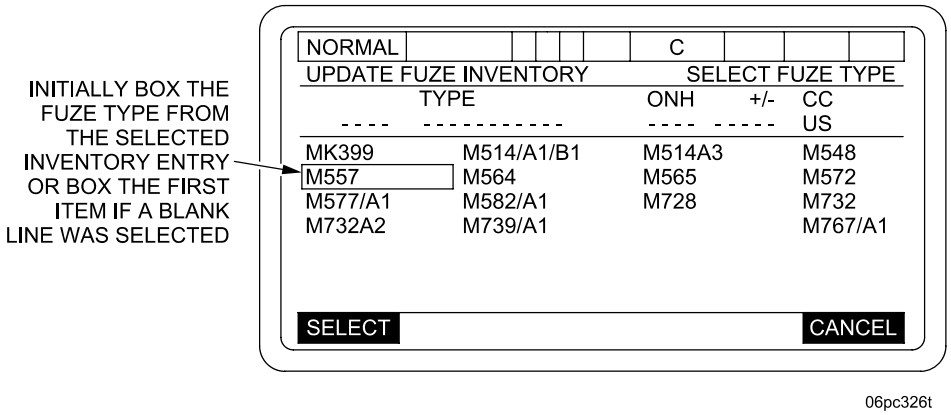

# L-6 AFCS INITIALIZATION - Continued

## L-6.2 Initializing - Continued

(p) Move box to proper column (ONH or +/-). Press SELECT key.

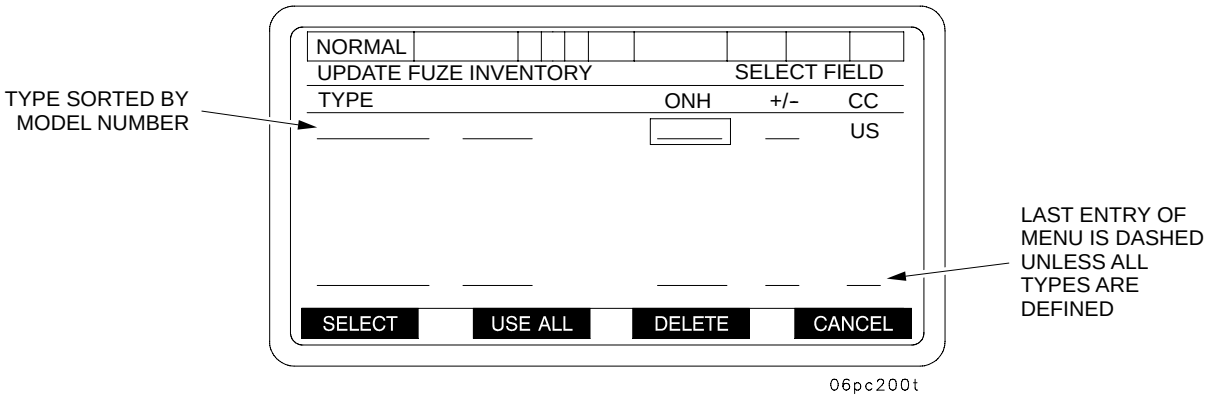


(q) Type in quantity and press ENT key.

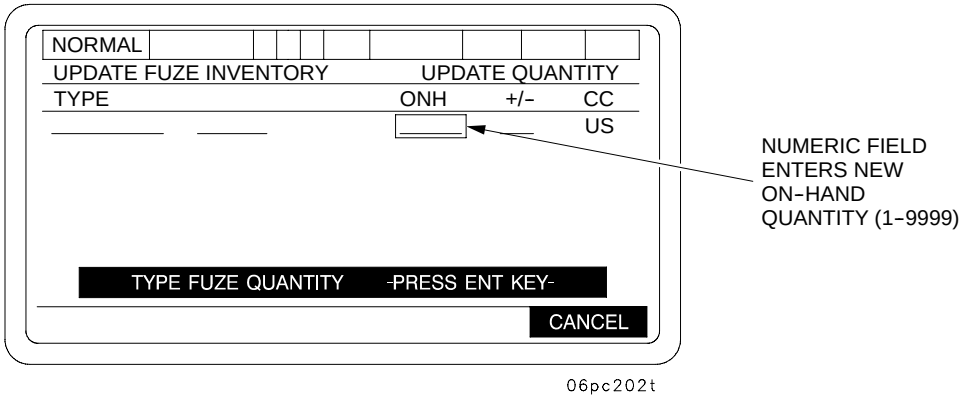


### NOTE

- The +/- soft key will appear when the +/- column is selected. If you select the ONH column, the +/- Soft key will not appear.
- Minus values must not exceed the amount on-hand. Plus values must not cause the on-hand total to exceed 9999. Either of these conditions shall cause the error message: "VALUE TOO SMALL" "ACK" or "VALUE TOO BIG" "ACK".

(r) When fuzes have been updated, press USE ALL key to return to INVENTORY MANAGEMENT menu.

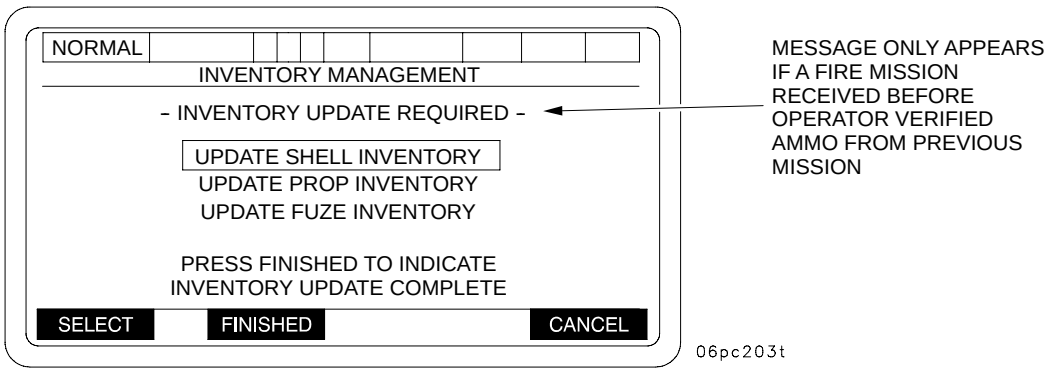

# L-6 AFCS INITIALIZATION - Continued

## L-6.2 Initializing - Continued

**NOTE**

- If a fire mission is activated while in any of the ammunition inventory sub-menus, all valid complete entries with consistent projectile/ propellant, country code matches shall be saved.
- If the CANCEL Soft key is selected all edits will be ignored.
- When the FINISHED soft key is pressed the ammunition inventory shall be reviewed to insure each group of projectiles has at least one propellant and each group of propellants has at least one projectile. If a projectile group is found without a propellant or a propellant without a projectile, the AFCS will display PROJECTILE/PROPELLANT MISMATCH menu. Pressing the CONTINUE Soft key on this menu will return operator to the INVENTORY MANAGEMENT menu, at which time the operator has to update SHELL/PROP inventory.

(s) When all ammunition data has been entered or updated, press FINISHED key to display the SETUP AND INFORMATION menu.

(6) PROPELLANT TEMPERATURE - Must be entered in order to complete initialization. After ammunition has been received, a propellant temperature should be obtained by the crew using a calibrated propellant temperature gage. Propellant temperatures are entered as follows:

**NOTE**

- Accurate propellant temperatures must be entered in order for AFCS to accurately compute Muzzle Velocity Variances.
- Numerical value must be entered before sign. Default sign is (+).

(a) Box in PROP TEMP from SETUP AND INFORMATION menu. Press SELECT key. A PROPELLANT TEMPERATURE menu will be displayed. Type in correct temperature and press ENT key.

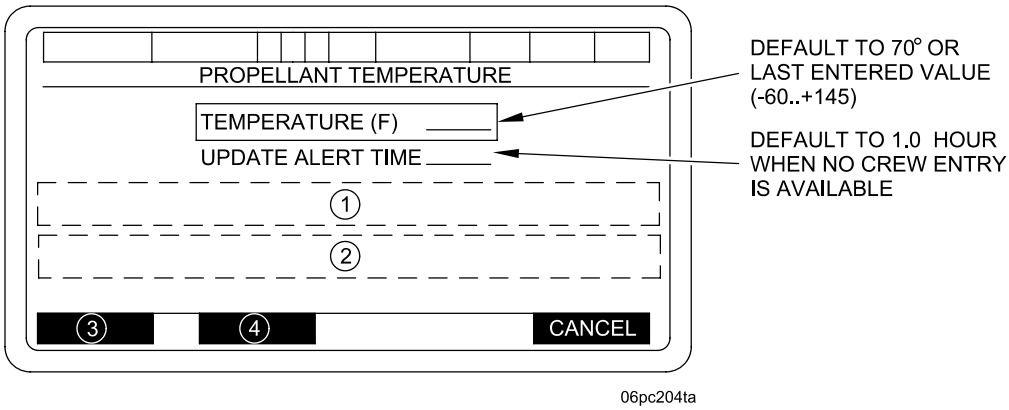


(1) TIME TO GO XX:XX (HOURS:MINUTES) OR TIME EXCEEDED

# L-6 AFCS INITIALIZATION - Continued

## L-6.2 Initializing - Continued

(2) WHEN TEMPERATURE SELECTED
TYPE TEMPERATURE IN FAHRENHEIT
DEGREES: -60 TO +145
- PRESS ENT KEY -
WHEN UPDATE ALERT TIME SELECTED
TYPE UPDATE TIME IN 0.5 HOUR
INCREMENTS 0.5 TO 2.0
- PRESS ENT KEY -

(3) BLANK - When TEMPERATURE or UPDATE ALERT TIME selected
SELECT - When item is not selected

(4) USE ALL - When no item is selected
+/- When temperature is selected
BLANK - When UPDATE ALERT TIME is selected

(b) If a temperature outside allowable range is input, operator alert "VALUE TOO BIG" or "VALUE TOO SMALL" will appear when ENT key is pressed. The ACK key must be pressed to return to the PROPELLANT TEMPERATURE menu to enter correct temperature.

(c) A propellant temperature is input during initialization by selecting PROP TEMP from the SETUP AND INFORMATION menu to display the PROPELLANT TEMPERATURE menu. The operator is allowed to enter the propellant temperature. If no temperature is entered the AFCS will use the default value of 70 degrees F. To enter the propellant temperature, place cursor to TEMPERATURE (F), press the soft key under SELECT prompt. An operator prompt "TYPE TEMPERATURE IN FAHRENHEIT DEGREES -60 TO +145 --PRESS ENTER KEY" will appear. Type in propellant temperature and press ENT key. In addition, the AFCS incorporates a timed audible and visual alert to the operator to warn that a propellant temperature update is required. The time interval to use for the audible and visual alerts are selectable on the PROP TEMP menu, from 30 minutes (0.5 hours) to 120 minutes (2.0 hours) in 30 minute increments. The alert time is defaulted to 1.0 hour when no time is entered by the operator. To set alert time, place cursor on UPDATE ALERT TIME, and press soft key under SELECT prompt. An operator prompt, "TYPE UPDATE TIME IN 0.5 HOUR INCREMENTS 0.5 TO 2.0, PRESS ENTER KEY. When the operator has successfully entered the propellant temperature and alert time return to SETUP AND INFORMATION menu by pressing soft key under USE ALL prompt. When correct propellant temperature and alert time have been entered, pressing USE ALL will display the SETUP AND INFORMATION menu.

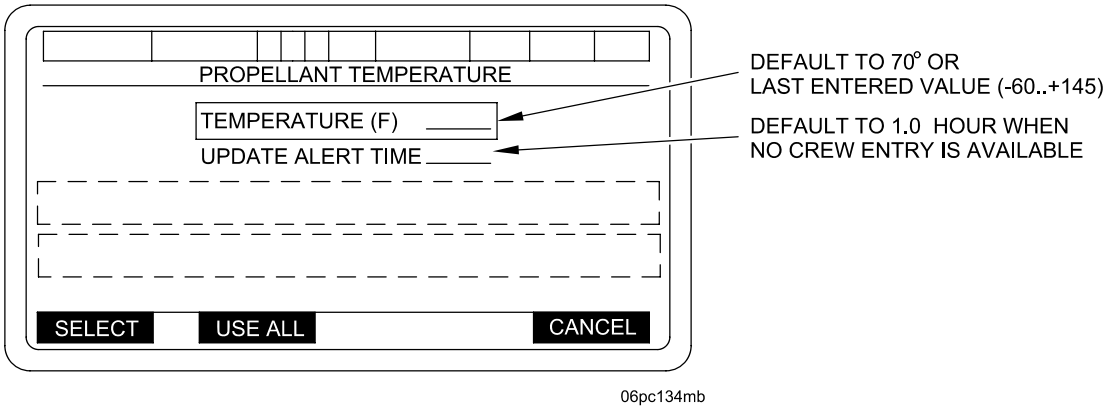


06pc134mb

# L-6 AFCS INITIALIZATION - Continued

## L-6.2 Initializing - Continued

(7) TOT RESPONSE TIME – This is used to set crew time response for a specific fire mission. The data tells the AFCS how much advance warning a crew needs before a Time on Target (TOT) mission is to be fired. This data is entered as follows:

(a) Box in TOT RESPONSE from SETUP AND INFORMATION menu. Press SELECT key to display a TIME ON TARGET CREW RESPONSE TIME menu.

(b) Enter data for response time and press the ENT key. This will return the display to the SETUP AND INFORMATION menu.

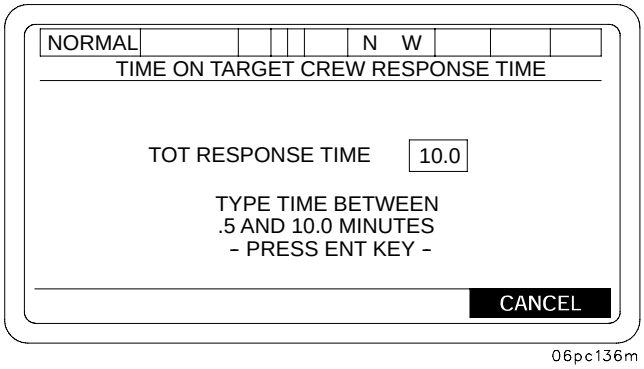


(8) LOAD ELEVATION – This data is entered in the AFCS to specify an elevation that the gun tube will automatically return to after firing when the LOAD key is pressed on the DU panel. Enter LOAD ELEVATION as follows:

(a) Box in LOAD ELEVATION from the SETUP AND INFORMATION menu. Press SELECT key to display a TUBE LOAD ELEVATION menu.

**CAUTION**

Do not enter an elevation greater than 300 mils. Settings above 300 mils may result in breech failing to close and could cause unnecessary wear on spring pack.

**NOTE**

Numerical value must be entered before sign. Default sign is (+).

(b) Type in desired elevation data and press ENT key. The SETUP AND INFORMATION menu will be displayed.

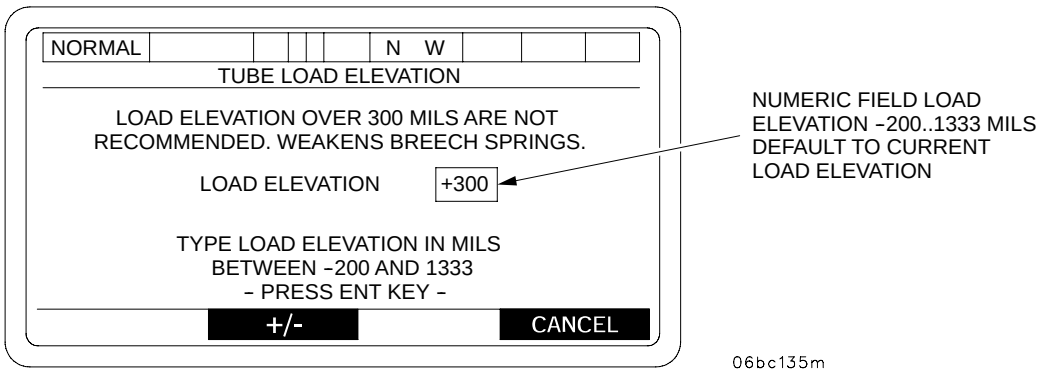

# L-6 AFCS INITIALIZATION - Continued

## L-6.2 Initializing - Continued

(9) SECTOR OF FIRE - Used to define the howitzer's sector of fire. Data is entered as follows:

(a) Box in SECTOR OF FIRE from SETUP AND INFORMATION menu. Press SELECT key to display DEFINE SECTOR OF FIRE menu.

(b) Box in LEFT LIMIT OF SECTOR. Press SELECT key. Enter data. Press ENT key. Move box to AOF. Press SELECT key. Enter data. Press ENT key. Move box to RIGHT LIMIT OF SECTOR. Press SELECT key. Enter data. Press ENT key.

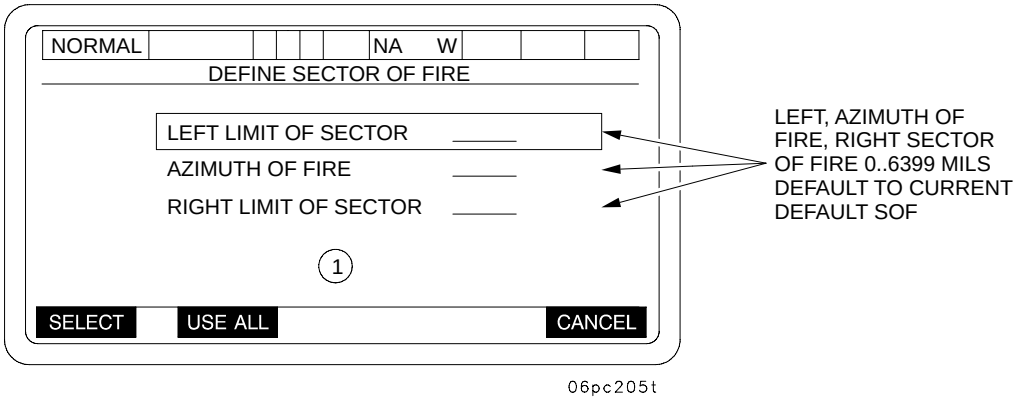


IF LEFT = RIGHT

ERROR - LEFT AND RIGHT EQUAL ACK

If AZIMUTH OF FIRE is not to RIGHT OF LEFT LIMIT and LEFT OF RIGHT LIMIT.

ERROR - AZIMUTH OF FIRE NOT IN SECTOR ACK

(1) BLANK: No selection made

Selection made:

"TYPE AZIMUTH BETWEEN 0 AND 6399 MILS"

"PRESS ENT KEY"

### NOTE

- Operator entered Sector of Fire data will be used by the AFCS during Move Orders to help orient the vehicle during emplacement at a Firing Point/Firing Area.
- During Emplacement after a Move Order, this AOF will be "Base Azimuth" for 3200 Deflection.
- SECTOR OF FIRE entered by the operator will be used to calculate ballistic. If FDC has not sent SECTOR OF FIRE for prescribed location (FIRING AREA/POINT).

# L-6 AFCS INITIALIZATION - Continued

## L-6.2 Initializing - Continued

(c) When all correct data has been entered, press USE ALL key to enter data. The following message will be displayed: “ARE YOU SURE” “YES” “NO”. If “YES” is selected, the sector of fire will be updated and the display will return to SETUP AND INFORMATION menu. If “NO” is selected, the message will be removed for re-entry of data. Operator entered Sector of Fire data will update the Site Data display.

(d) When all initialization data (Asterisk items from SETUP AND INFORMATION menu) has been entered, and the navigation subsystem alert “OK TO MOVE OR SHOOT”, “ACK” has been displayed and the ACK key pressed, then press CANCEL key on SETUP AND INFORMATION menu to bring up a SECTION IN ORDER AT INITIALIZATION POINT display.

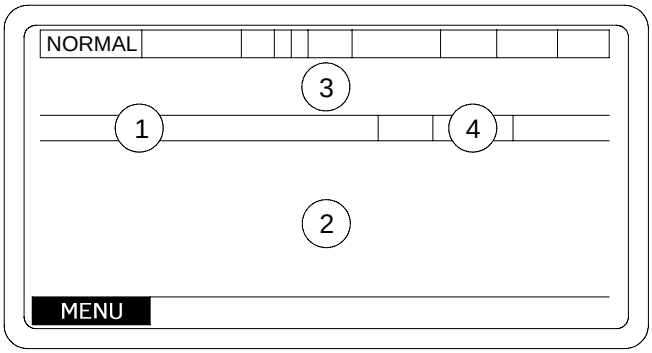


06pc138m

1 “FPF/PRI EXISTS” FPF/PRI TARGET EXISTS IN STORED TARGET TABLE
“NO FPF/PRI EXISTS” - FPF/PRI TARGET DOES NOT EXIST IN STORED TARGET TABLE

2 “SECTION IN ORDER AT LOGISTICS POINT” - ARRIVAL LOCATION IS LOGISTICS POINT “SECTION IN ORDER AT INITIALIZATION POINT” - ARRIVAL LOCATION IS INITIALIZATION POINT

3 DO NOT MOVE - NO FPF/PRI EXISTS
DO NOT MOVE / DO NOT LOAD - FPF-PRI TARGET EXISTS

4 TUBE TEMPERATURE STATUS

## L-6 AFCS INITIALIZATION - Continued

### L-6.3 Initialization After an Orderly Shutdown.

**WARNING**

When operating the PLGR on external power with BA-5800 lithium battery installed, the battery may explode. Ensure battery is removed before connecting power cable to prevent serious injury or death.

**NOTE**

M93 MVS must be installed and connected prior to turning the vehicle MASTER power switch ON.

During AFCS operation, it may become necessary to power down and then back up; e.g., a system lockup occurs.

**NOTE**

After AFCS has been powered down, the AFCS will power up and be operational in approximately 3-4 minutes.

Power down in this form causes an orderly shutdown, and some of the AFCS data is saved. An orderly shutdown also occurs when the power is turned off after normal operations. Some of the data saved on orderly shutdown is Network Setup, Ammo Inventory, Navigation Data (location where system was powered down), TOT Response, Load Elevation, and the last operator-entered Sector of Fire. When the system is turned back on from an orderly shutdown, step-by-step initialization is not necessary, although action on all asterisk marked items on the SETUP AND INFORMATION menu must be accomplished. The process for initialization after an orderly shutdown is as follows:

a. System Power Up. Set MASTER switch and Power Conditioner Unit circuit breakers to ON.

With the PLGR in the PLGR mount and all external cables attached, press the ON/BRT key on the PLGR key pad. The PLGR should power up automatically and perform its self-test (BIT). Operate the PLGR in accordance with the PLGR TM 11-5825-291-13.

If the PLGR does not have a current key (i.e. the PLGR was previously “zeroized”, newly installed or the key has expired), then load a valid key in accordance with the PLGR TM 11-5825-291-13, Section 3.6.

**NOTE**

To load a key, the DRUH must be off, or the P4 DRUH-PLGR Signal Connector must be disconnected to cause a PLGR COM FAIL. Simple re-attachment of P4 DRUH-PLGR Signal Connector after PLGR keying will automatically cause DRUH-PLGR communications to resume if DRUH is on.

If the PLGR antenna has a clear view of the sky, turn PLGR on. If the antenna’s view of the sky is blocked (e.g. the vehicle is in a building, under tree cover or parked next to a large structure), move vehicle until the PLGR is clear.

If the vehicle cannot be moved, keep PLGR turned off until the vehicle can be moved to a location with a clear view of the sky.

## L-6 AFCS INITIALIZATION - Continued

### L-6.3 Initialization After an Orderly Shutdown - Continued

**NOTE**

- If the PLGR is off, the Navigation Subsystem will still accept initialization data from the AFCS for inertial operation and the Navigation System will operate as before.
- Guidelines for conditions and times for the PLGR to obtain position data acceptable by the AFCS.

(1) If the antenna has a clear view of the sky and PLGR has a valid position, current GPS time, current GUV key, and has stored a current satellite almanac, PLGR will be acceptable for use in about three minutes following the first turn-on of the day. It will take about 90 seconds for subsequent turn-ons. These are the normal operating conditions.

(2) If the antenna has a clear view of the sky and PLGR has a current GUV key but the PLGR doesn't have a valid position, current GPS time, or current satellite almanac, it may take up to 20 minutes after turn-on for the PLGR to output data of acceptable accuracy.

(3) If the PLGR has a valid position, current GPS time, current key, and current satellite almanac, but the antenna is masked from a clear view of the sky when PLGR is turned on, it may take up to 20 minutes to get acceptable data after the vehicle is moved to a location with a clear view of the sky. This results from the PLGR initiating a search for all possible satellites if it can't lock on to those expected, for its current position, time, and almanac, within a reasonable time interval.

(4) If the PLGR doesn't have a current key, its data won't be acceptable for use by the AFCS. However, assuming a clear view of the sky, it can be turned on to initialize position, time, and satellite almanac in about 20 minutes. Then when a valid key is loaded, the PLGR will be ready to go within three minutes.

**NOTE**

M93 MVS must be installed and connected prior to turning the vehicle MASTER power switch on.

Make sure TRAINING switch on DU is OFF. Set POWER switch on DU to ON. When power is first applied to the AFCS, the display will be blank and the AFCS will automatically perform its internal self-test (BIT). Next a screen will be displayed with this message "AFCS OPERATING SYSTEM BOOT UP...PLEASE WAIT...", followed by an "INITIALIZATION IN PROGRESS..." screen.

**NOTE**

- The time lapse between first three screens can range from 3 to 5 minutes.
- If screen stays blank for more than 7 minutes, power down system.

A "SYSTEM VERIFICATION FAILURE" screen may be displayed only if the SYSTEM VERIFICATION report indicates a failure.

## L-6 AFCS INITIALIZATION - Continued

### L-6.3 Initialization After an Orderly Shutdown - Continued

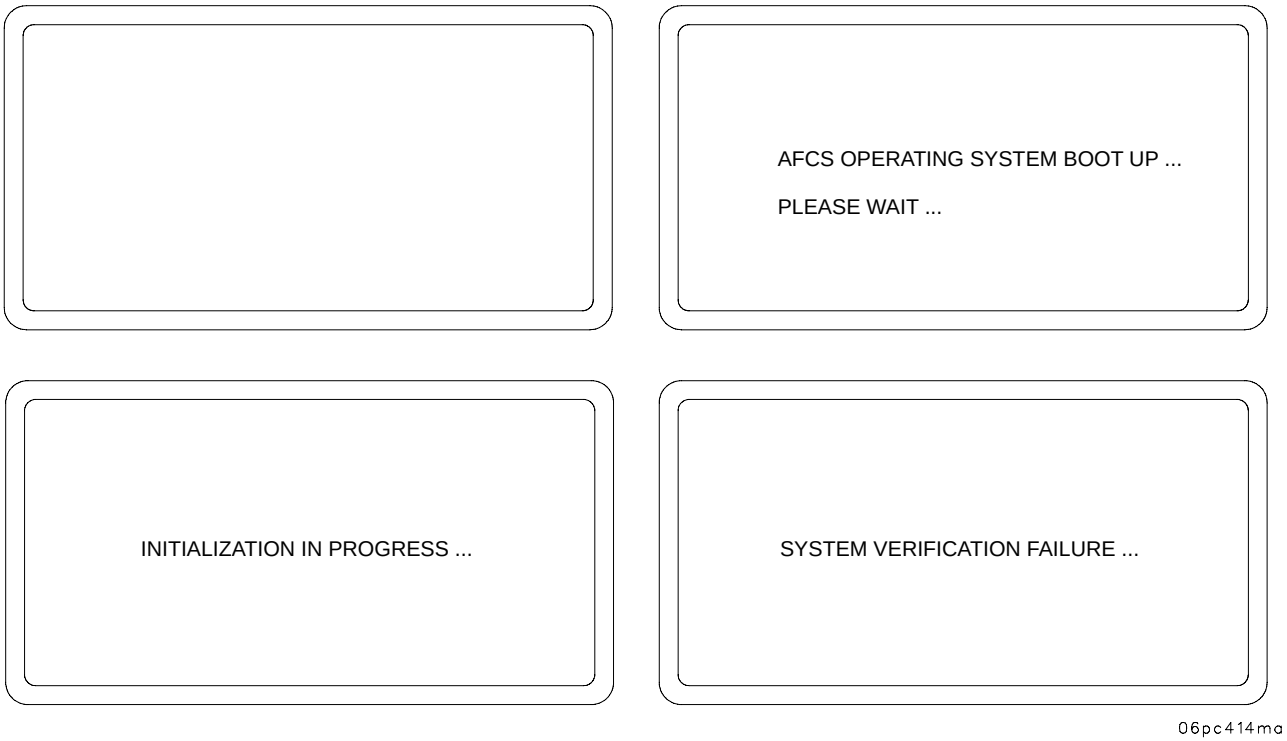


After the AFCS powers up, the PLGR screen should read:

REMOTE CONTROL
Only ZEROIZE key
activated

At this point the PLGR key pad will become inactive. The only PLGR operation allowed using the key pad is EMERGENCY ZEROIZE.

If this message is not displayed on the PLGR screen, and the Low Priority Message “GPS OUT - PLGR DISCONNECTED” is not displayed on the DU, ensure that the DRUH-PLGR Signal Connector (P4) plug on the W17A cable is connected and secure. Once this PLGR screen is displayed, proceed with system initialization.

**NOTE**

- NAV SUBSYSTEM includes: VMS, DRUH, VMS Modems
- PCU SUBSYSTEM includes: PCU and both Back-Up Batteries
- The switches on the PCU are circuit breakers. They should be left ON at all times, so they will not wear out from being turned off and on constantly.

# L-6 AFCS INITIALIZATION - Continued

## L-6.3 Initialization After an Orderly Shutdown - Continued

(5) This screen displays the subsystems that are checked by BIT. As the subsystems are checked, the dashed lines will change to a subsystem status (OK, DEGRADED, OUT, - -). The - - appears on the MVS status line when the AFCS could not be connected to the MVS. This screen also identifies the system software version.

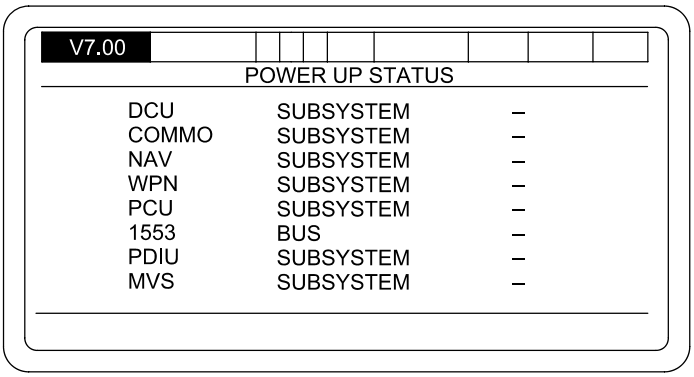


06pc271t

In the event of a failure during POWER UP STATUS, the message, DEGRADED-ACK TO CONTINUE, will be displayed on the bottom line of the EL Panel. To continue, depress soft key under ACK. After the self-test is complete, SELECT OPERATIONAL MODE menu is displayed.

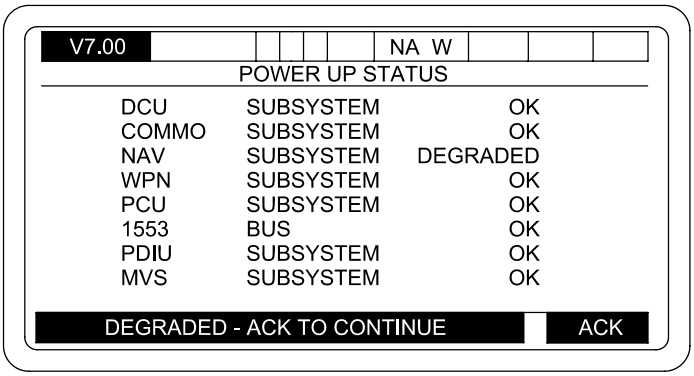


06pc244t

**NOTE**

If DCU contains an incorrect configuration, the AFCS will not allow the operator to select normal operations until a correct DCU software configuration is downloaded.

## L-6 AFCS INITIALIZATION - Continued

### L-6.3 Initialization After an Orderly Shutdown - Continued

When configuration verification checking indicates that an invalid howitzer software configuration is present, a short error message “INVALID SOFTWARE CONFIGURATION” “ACK” will appear on the soft key label line of the DU.

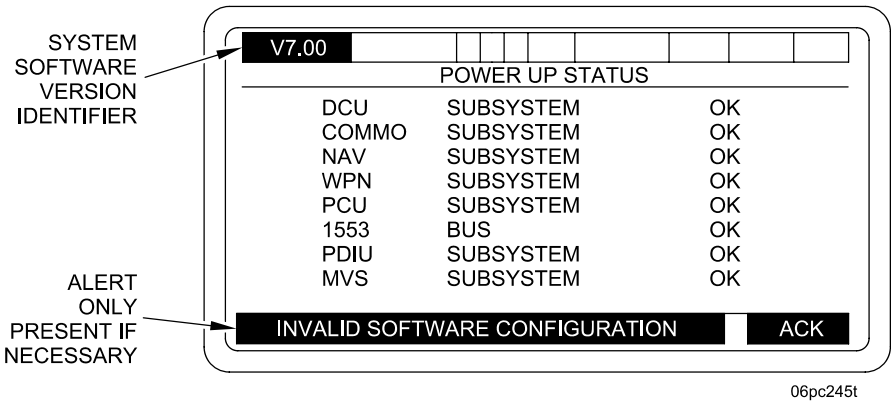


*Discuss Boresight entry requirements during initial POWER-UP and DU FAULT LAMPS

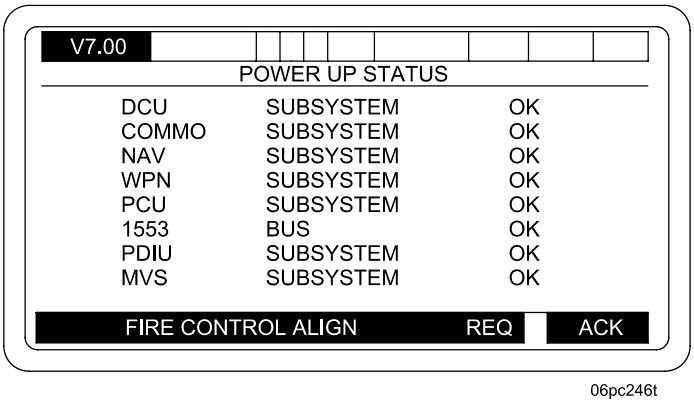


When the message is acknowledged, the AFCS will proceed to the “SELECT OPERATIONAL MODE” menu. To view detailed software configuration information for each LRU, MAINTENANCE should be selected, IAW procedure in para L-9.1.

(6) Operational Mode Selection Menu.

This menu allows selection of the primary operating mode for the AFCS.

The selection structure shows the prompting for Embedded Training selection. Note that the TRAINING selection and the associated prompting will not be available if the Embedded Training Controller fails power-up BIT.

## L-6 AFCS INITIALIZATION - Continued

### L-6.3 Initialization After an Orderly Shutdown - Continued

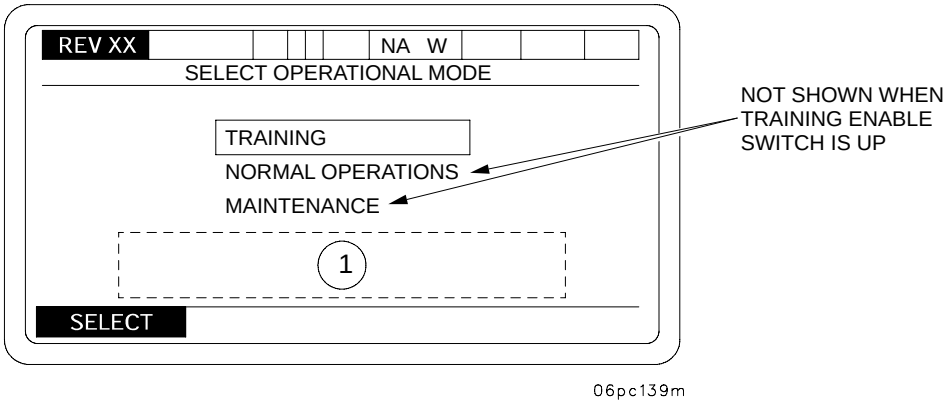


(1) - WHEN TRAINING SWITCH IS UP:

**POSITION TRAINING ENABLE SWITCH DOWN**

**TO SELECT OTHER MODES**

- WHEN TRAINING SWITCH IS DOWN:

**POSITION TRAINING ENABLE SWITCH UP**

**TO SELECT TRAINING MODE**

b. Initialization.

**NOTE**

After an orderly shutdown, follow the procedures below. However, if a catastrophic failure happens within the system, go to para L-6.4.

Select NORMAL OPERATIONS on the SELECT OPERATIONAL MODE menu and press SELECT soft key. A NETWORK menu will be displayed.

(1) NETWORK - Check data on the NETWORK menu for correctness against current data from POC/FDC and press FINISHED.

**NOTE**

To ensure efficient set up of the digital net, it is very important that NETWORK data be assigned and controlled by POC/FDC. Verify data per local SOP.

(a) Only one network configuration will be active at any one time. The active configuration is identified by the label "*ACTIVE*" in the "STATUS" column.

(b) Inactive configurations do not have anything displayed in the "STATUS" column.

(c) TACFIRE configurations will not display anything in the "COMSEC" and "MODE" columns of the NETWORK screen.

(d) 188-220 communications configurations identify the Device, Baud Rate, COMSEC and Mode. 188-220 configurations with any customized values identify the Device as "CUSTOM/R" for Radio and "CUSTOM/W" for Two-Wire.

# L-6 AFCS INITIALIZATION - Continued

## L-6.3 Initialization After an Orderly Shutdown - Continued

(e) The AFCS will not reorder network configurations as a result of deletions.

(f) The “FINISHED” and “VIEW” soft keys are not visible unless at least one configuration is defined.

(g) Soft key sequencing shall be as follows:

- SELECT soft key - If the highlighted configuration was previously defined, control transitions to NETWORK SETTINGS-SELECT CONFIGURATION OPTION display. If the highlighted configuration has not been defined, control transitions to NETWORK SETTINGS-STANDARD COMMUNICATION CONFIGURATION display (see para L-6.2c).
- FINISHED soft key - When the operator presses the “FINISHED” soft key, the AFCS stores all defined network configurations and control transitions to Normal Operational Initialization Display.
- VIEW soft key - When the “VIEW” soft key is pressed and the currently selected network configuration has been defined, control transitions to the NETWORK SETTINGS display (see para L-6.2e). When the “VIEW” soft key is pressed and the currently selected network configuration has not been defined, control does not transition.

(h) AFCS supports 11 predefined communications configurations (see Table L-2).

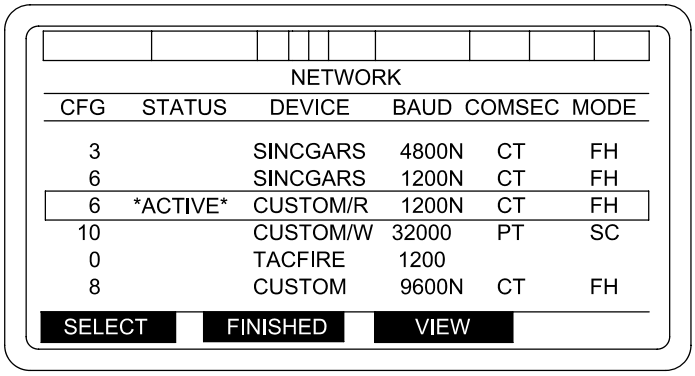


06pc322t

(2) SET DATE/TIME - Select SET DATE/TIME on SETUP AND INFORMATION menu and press SELECT to display a SET DATE/TIME GROUP menu.

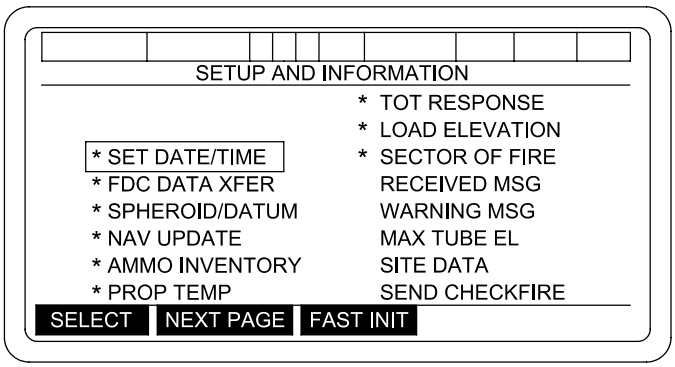


06pc327ta

# L-6 AFCS INITIALIZATION - Continued

## L-6.3 Initialization After an Orderly Shutdown - Continued

**NOTE**

Use according to unit SOP.

If GPS data is available select “USE GPS”.

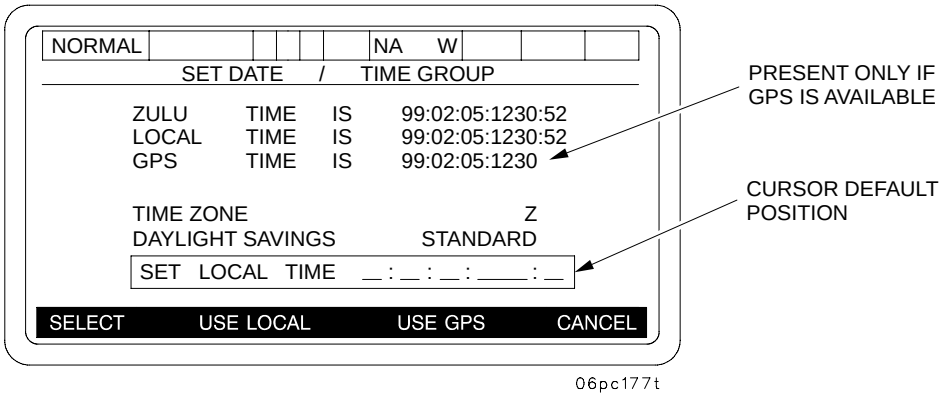


**NOTE**

If GPS is not available or if POC has instructed you not to use GPS time, type in new DTG.

SELECT TIME ZONE - Enter SELECT TIME ZONE in accordance with unit SOP.

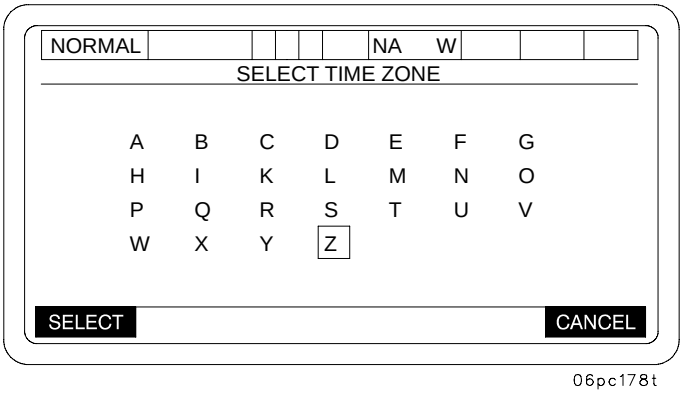


SELECT DAYLIGHT SAVINGS - Enter DAYLIGHT SAVINGS TIME in accordance with unit SOP.

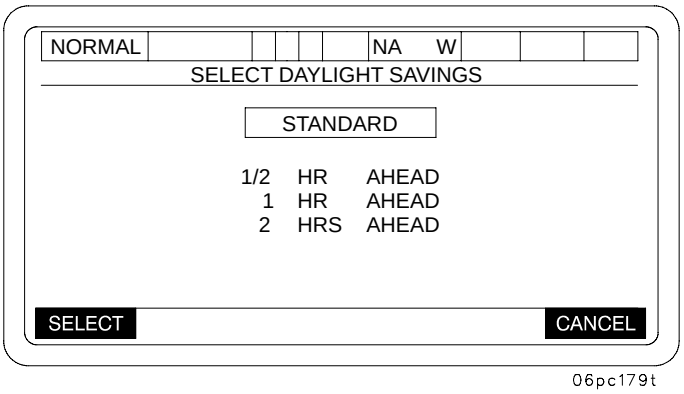

## L-6 AFCS INITIALIZATION - Continued

### L-6.3 Initialization After an Orderly Shutdown - Continued

Contact the POC by voice radio to obtain the correct date/time data and a MARK. Type in date/time data (year, month, day, hour, minute) as given by the POC. If the data is entered incorrectly a message will be displayed stating “Invalid DTG Value,” and you will have to re-enter the data. When this is done, another SET DATE/TIME GROUP menu will be displayed.

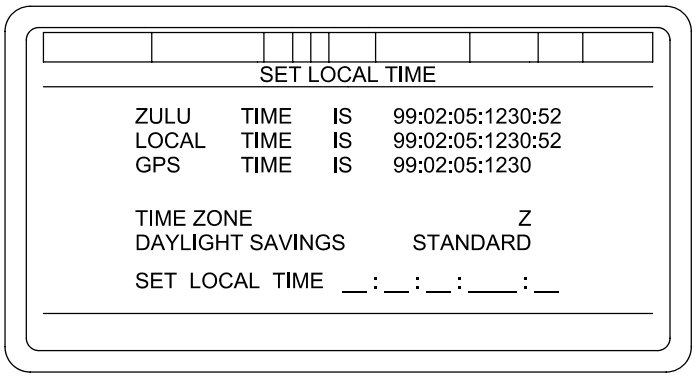


06pc180tb

When the FDC operator gives a countdown and announces MARK, press MARK. The AFCS and FDC time should now be synchronized. A SETUP AND INFORMATION menu is then displayed on the DU.

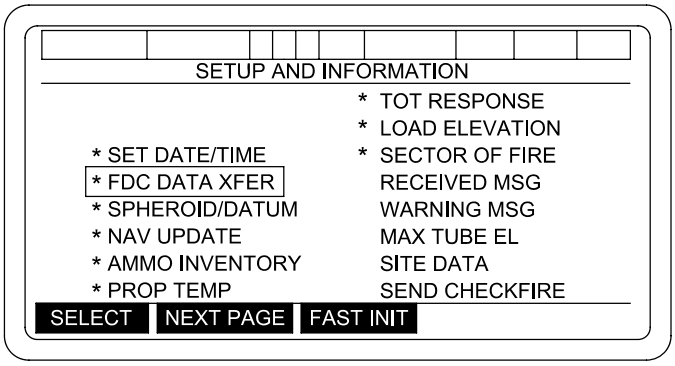


06pc327t

**NOTE**

The FDC DATA TRANSFER must be done each time you initialize the AFCS, if the POC/FDC is operational.

(3) FDC DATA TRANSFER - To obtain current initialization data (current MET, registration data, etc.), select FDC DATA XFER on SETUP AND INFORMATION menu. Press SELECT soft key to display a FDC DATA TRANSFER menu.

# L-6 AFCS INITIALIZATION - Continued

## L-6.3 Initialization After an Orderly Shutdown - Continued

The INITIALIZATION menu item will be automatically boxed and the operator will be prompted to press “YES” or “NO”. Pressing “YES” will cause a message to be sent to FDC requesting initialization data. If you know that FDC is not operational, pressing “NO” will clear the * from FDC DATA XFER on the SETUP AND INFORMATION menu.

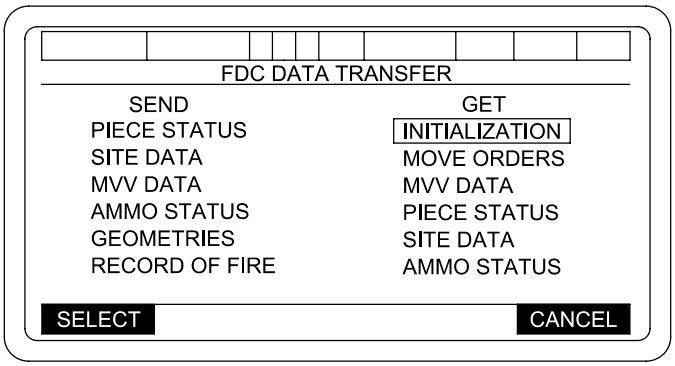


06pc328ta

(4) ENTER SPHEROID/DATUM - The FDC DATA XFER, INITIALIZATION data includes a SPHEROID/DATUM, but does not transfer the necessary map DATUM. To input the correct DATUM, box in the “ENTER SPHEROID/DATUM” and press the SELECT key. This brings up the SPHEROID/DATUM entry menu.

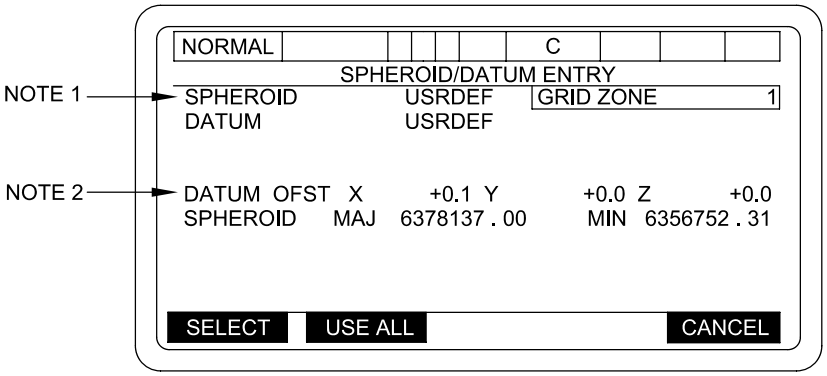


06pc249ta

Check to see that all the data is correct. If it is correct, press the USE ALL key, and proceed with the initialization. If an entry is not correct, select that field and make corrections.

NOTE 1 SELECTION OF THIS FIELD WILL DISPLAY SELECT SPHEROID MENU.

NOTE 2 FIELD IS ONLY PRESENT IF USER DEFINED (USRDEF) SPHEROID IS USED.

# L-6 AFCS INITIALIZATION - Continued

## L-6.3 Initialization After an Orderly Shutdown - Continued

When grid zone is selected, the following will be displayed:

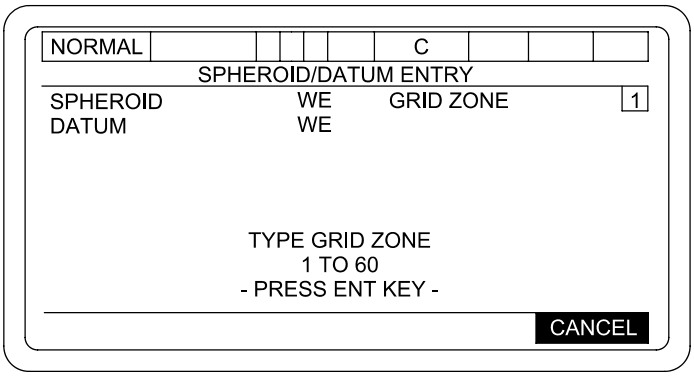


06pc250t

When DATUM is selected, SELECT DATUM menu is displayed:

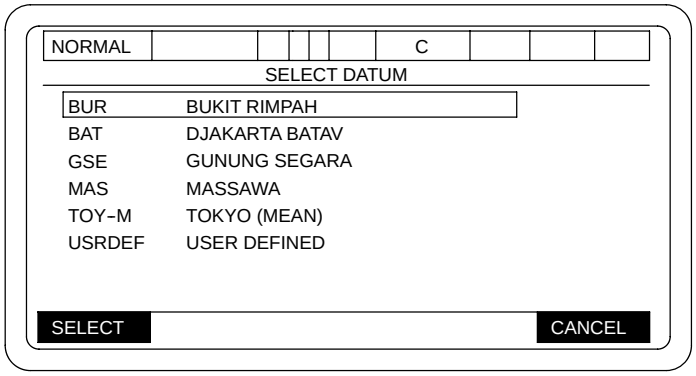


06pc253t

Box in the correct DATUM and press the SELECT key. The DATUMs available are dependent on the SPHEROID selected. See Table (Appendix J.1) AFCS/FDC DATUM AND SPHEROID for SPHEROID/DATUM combinations.

## L-6 AFCS INITIALIZATION - Continued

### L-6.3 Initialization After an Orderly Shutdown - Continued

**NOTE**

The reference frame for UTM position coordinates is a DATUM. Typically, a Local DATUM is defined by an ellipsoidal earth model (SPHEROID) and a starting point (origin) for the coordinate system. Coordinates on a map or in a Trig list (SCPs) often are on a Local DATUM. An example of a Local DATUM is the North American 1927 (NAD 27) DATUM used in the United States. There have been many different Local DATUMs developed. GPS computes position on the World Geodetic System 1984 (WGS 84), a worldwide coordinate system. To use GPS with coordinates on a Local DATUM, the coordinates must be mathematically shifted. The AFCS (DRUH and PLGR) can automatically perform DATUM shifting, but first the operator must select the Local DATUM to be used, or provide the appropriate shift parameters. For AFCS operation, Local DATUMs are represented by two sets of parameters: The Local Ellipsoid (SPHEROID) and shift parameters as defined for each Local DATUM (DATUM IDs). The FDC can provide the SPHEROID. But the FDC cannot provide the Local DATUM. Therefore the operator must enter it. The SPHEROID selected will determine which DATUM IDs will be available for selection. The AFCS/FDC SPHEROID and DATUM TABLE provides the SPHEROID number for the AFCS and FDC, which DATUM IDs are available for that SPHEROID number and the normal coverage area. Note that there may be more than one DATUM ID associated with a Local DATUM because the shifts vary by locality. For other DATUMs or areas outside the indicated coverage area, User Defined (USRDEF) Datum shifts may be entered manually. The table is not intended as an absolute. A map sheet will identify the DATUM name, Ellipsoid (SPHEROID) name and the coordinate type, or the map sheet will identify the area. The data from a Trig list should identify the same information. These parameters must be correlated to the DATUM ID. If the applicable DATUM ID hasn't been programmed in the AFCS, shift parameters for many other DATUMs and regions have been published in DMA TR 8350.2 and may be entered thru the DATUM X, Y and Z offsets. Note that the AFCS cannot accept shift parameters for all Datums because its SPHEROID capability is limited to those listed in the AFCS/FDC Table1.

## L-6 AFCS INITIALIZATION - Continued

### L-6.3 Initialization After an Orderly Shutdown - Continued

If the DATUM USR DEF is selected, then the DATUM X, Y, and Z offsets must be entered. These values must be obtained from the POC and should only be used with guidance from Battery Commander. The ENTER USER DATUM PARAMETERS page should look like:

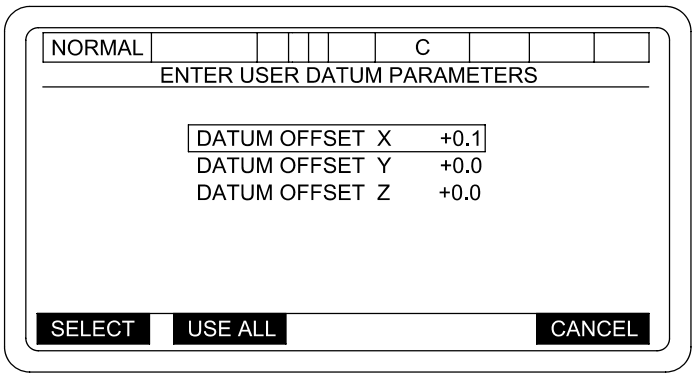


06pc254t

When DATUM OFFSET is selected:

Type -2000.0 TO +2000.0:
Press ENT key.

When DATUM OFFSET Y is selected:

Type -2000.0 TO +2000.0:
Press ENT key.

When DATUM OFFSET Z is selected:

Type -2000.0 TO +2000.0:
Press ENT key.

After all the correct data has been entered, press the USE ALL key to clear and return to the main menu.

(5) NAVIGATION UPDATE - Select NAV UPDATE and press SELECT soft key to display a NAVIGATION SUBSYSTEM UPDATE menu.

**NOTE**

- If vehicle has not been moved since orderly shutdown, the Navigation Subsystem will initiate a Stored Heading Align, which will be completed in about 90 seconds.
- If vehicle has been moved since orderly shutdown, move vehicle to a survey point and enter survey data.

# L-6 AFCS INITIALIZATION - Continued

## L-6.3 Initialization After an Orderly Shutdown - Continued

Check data for correctness. If correct, press USE ALL soft key. The prompt, NAV POSITION UPDATE TO START, ARE YOU SURE (YES OR NO), will be displayed. Make proper selection. Press the YES key to RESTART the Navigation Subsystem and display the SETUP AND INFORMATION menu.

Press the NO key to redisplay Navigation Subsystem Update menu. Make corrections or press CANCEL to display SET UP AND INFORMATION menu.

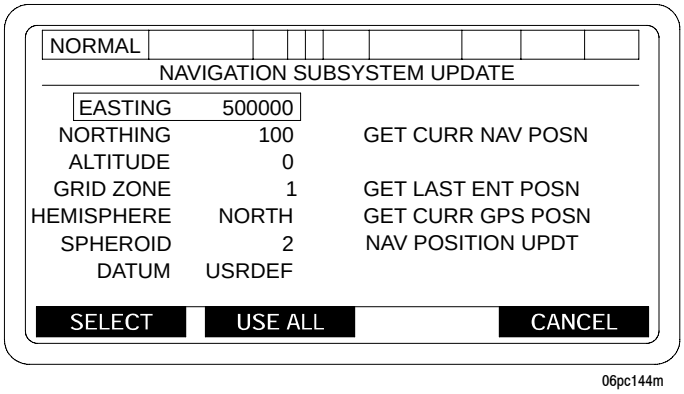


(6) AMMO INVENTORY - Select AMMO INVENTORY on the SETUP AND INFORMATION menu. Press SELECT soft key to display INVENTORY MANAGEMENT menu.

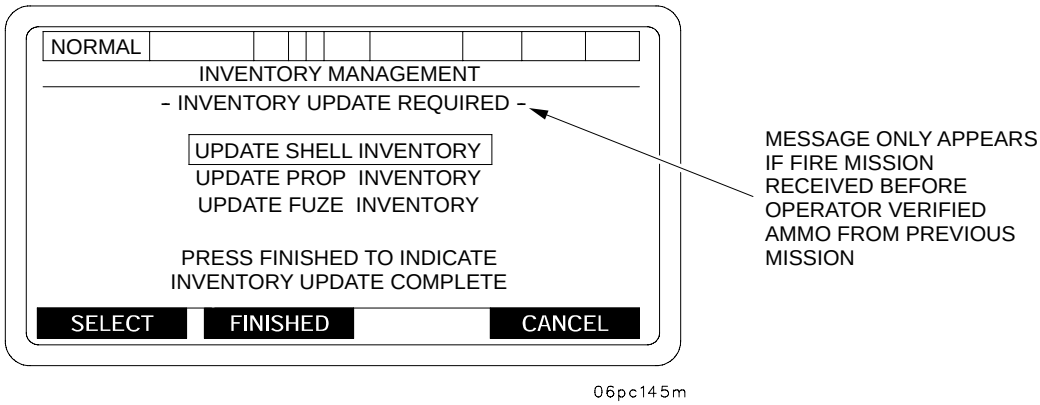


**NOTE**

If a fire mission is activated while in any of the ammunition inventory sub-menus, all valid complete entries shall be saved.

If the ammunition inventory is current, press FINISHED soft key to display the SETUP AND INFORMATION menu. If ammunition inventory is not current, to enter ammunition data, refer to para L-6.2.

# L-6 AFCS INITIALIZATION - Continued

## L-6.3 Initialization After an Orderly Shutdown - Continued

(7) PROPELLANT TEMPERATURE - Select PROP TEMP on SETUP AND INFORMATION menu. Press SELECT key to display a PROPELLANT TEMPERATURE menu.

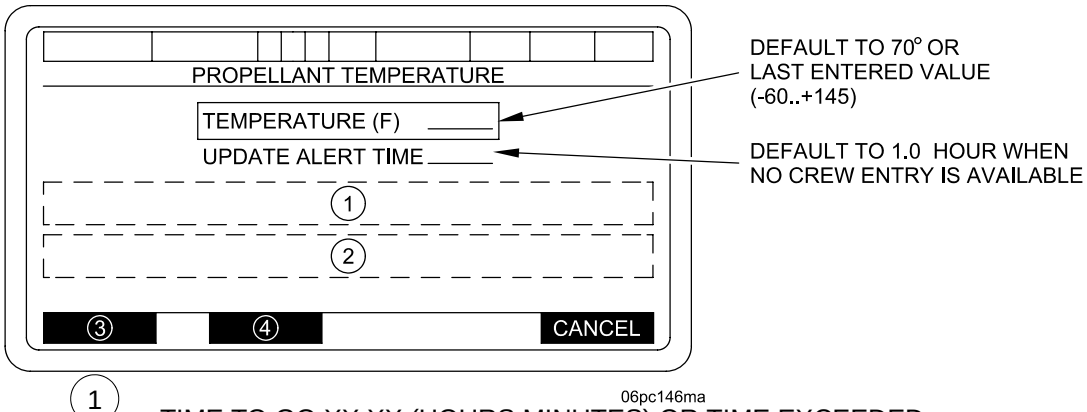


1 TIME TO GO XX:XX (HOURS:MINUTES) OR TIME EXCEEDED

2 WHEN TEMPERATURE SELECTED

TYPE TEMPERATURE IN FAHRENHEIT
DEGREES -60 TO +145
- PRESS ENT KEY -

WHEN UPDATE ALERT TIME SELECTED

TYPE UPDATE TIME IN 0.5 HOUR
INCREMENTS 0.5 TO 2.0
- PRESS ENT KEY -

3 BLANK - WHEN TEMPERATURE OR UPDATE ALERT TIME SELECTED
SELECT - WHEN ITEM IS NOT SELECTED

4 USE ALL - WHEN NO ITEM IS SELECTED
+/- WHEN TEMPERATURE IS SELECTED
BLANK - WHEN UPDATE ALERT TIME IS SELECTED

# L-6 AFCS INITIALIZATION - Continued

## L-6.3 Initialization After an Orderly Shutdown - Continued

If displayed temperature and update alert time are correct, press USE ALL key. If another temperature or alert time entry is necessary, box the desired item and press SELECT key. Type in new temperature or alert time and press ENT key. When entries are correct, press USE ALL key. The SETUP AND INFORMATION menu will be displayed.

(8) TOT RESPONSE - To access the TOT RESPONSE menu, press NEXT PAGE key to display next page of SETUP AND INFORMATION menu.

Select TOT RESPONSE and press SELECT to display a TOT RESPONSE menu.

Type in desired time to be used and press ENT key. The SETUP AND INFORMATION menu will be displayed.

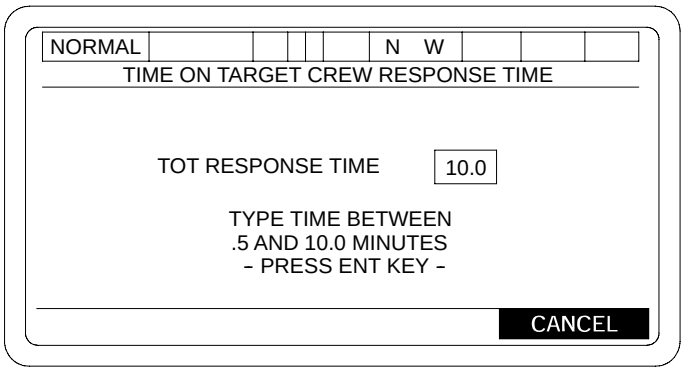


06pc135m

(9) Select LOAD ELEVATION on the SETUP AND INFORMATION menu. Press SELECT key to display a TUBE LOAD ELEVATION menu.

**CAUTION**

Do not enter an elevation greater than 300 mils. Settings above 300 mils may result in breech failing to close and could cause unnecessary wear on spring pack.

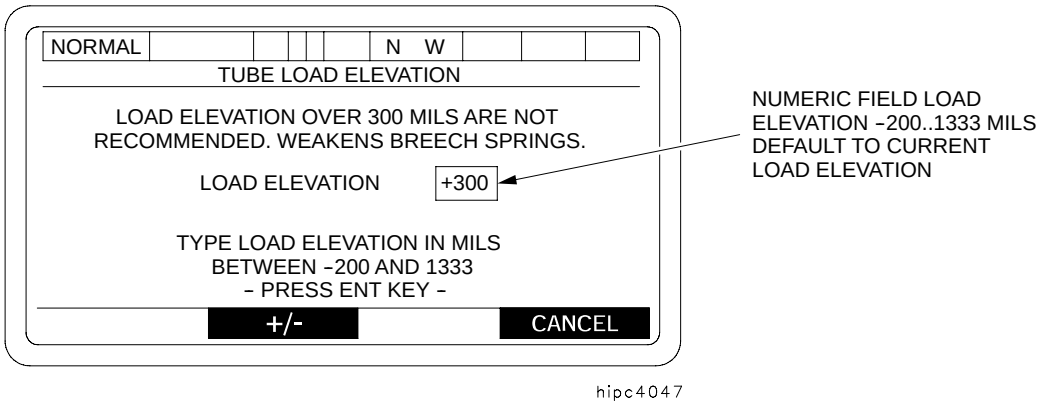


hipc4047

If load elevation shown is the desired elevation, press ENT key. If a new elevation is desired, type in desired elevation and then press ENT key. The SETUP AND INFORMATION menu will be displayed.

## L-6 AFCS INITIALIZATION - Continued

### L-6.3 Initialization After an Orderly Shutdown - Continued

(10) Select SECTOR OF FIRE on SETUP AND INFORMATION menu. Press SELECT soft key to display a DEFINE SECTOR OF FIRE menu.

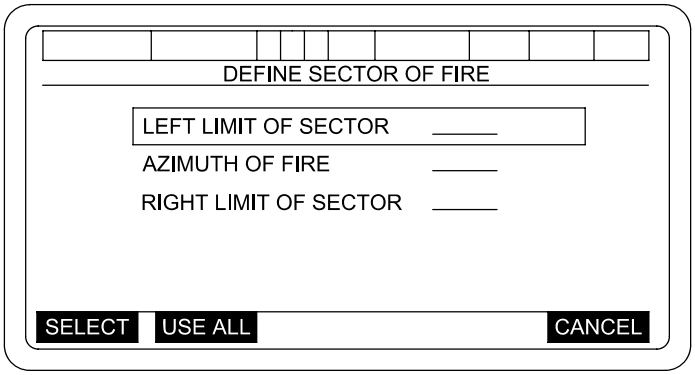


06pc205tc

If data displayed on menu is desired sector of fire, press USE ALL soft key. If a change is needed, select area to be changed, type in change and press ENT key. Repeat for additional changes, when complete press USE ALL soft key. The following message will be displayed: “ARE YOU SURE” “YES” “NO”. If “YES” is selected, data will be updated and the display will return to SETUP and INFORMATION menu. If “NO” is selected, the message will be removed for re-entry of data. A POS UPDATE or NAV RESTART must be performed if the changes are to be used by the AFCS.

(11) SECTION IN ORDER - When navigation alignment time has been completed, or message “OK TO MOVE OR SHOOT” “ACK” has been acknowledged, a CANCEL prompt will appear on the SETUP AND INFORMATION menu. Press CANCEL to display the SECTION IN ORDER AT INITIALIZATION POINT screen.

The AFCS system is now initialized and can perform missions as directed.

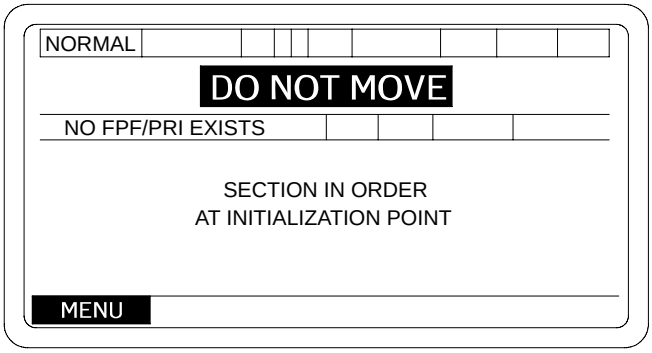


06pc148m

## L-6 AFCS INITIALIZATION - Continued

### L-6.4 Initialization After a Catastrophic Failure.

a. If a catastrophic failure (e.g., sudden loss of power of PCU) occurs, it is possible that no data at all will be saved by the AFCS. In this case, a step-by-step-system initialization must be done.

**NOTE**

- Position data must be recorded prior to pressing ARRIVED key during emplacement. If time permits the crew should also set out collimator or select a DAP and set 3200 Deflection on the PANTEL on Center of Sector (Base Azimuth).
- To be able to react quickly to re-initialize a failed AFCS, a Platoon SOP voice request procedure from crew to POC to send all required data messages from FDC may be helpful. Data that would be useful from FDC are: INITIALIZATION (Subscriber File, Map Mode, MET, Registration), MUZZLE VELOCITY, Current Position (to include Sector of Fire) and Propellant Temp (PIECE STATUS), SITE STATUS, and AMMO STATUS.

b. Getting Data. To return to Section in Order as fast as possible after a catastrophic failure of the AFCS, return the tube to travel lock before shutting AFCS power off. Wait about 5 seconds, then turn AFCS power on. Begin the Initialization process as normal, working off the * menu items on the SETUP AND INFORMATION menus. If FDC has current data, get as much data as you can from FDC. This data can be obtained as follows:

(1) Box FDC DATA XFER on the SETUP AND INFORMATION menu and press SELECT key. The INITIALIZATION item under the GET column will be boxed as usual. Press YES to transmit the request for INITIALIZATION data (Subscriber File, Map Mode, MET and Registration).

(2) Next, box MUZZLE VELOCITY under the GET column and press SELECT key. Press YES key to transmit the request to FDC.

**NOTE**

The AFCS automatically uses the Muzzle Velocity data sent by FDC. No further action is necessary by the crew.

(3) Repeat the last step for PIECE STATUS, SITE STATUS, and AMMO STATUS.

(4) Once all requests have been sent, press CANCEL key to move to the next initialization step on the SETUP AND INFORMATION menu.

## L-6 AFCS INITIALIZATION - Continued

### L-6.4 Initialization After a Catastrophic Failure - Continued

c. Nav Update.

(1) Use your current position data that you recorded upon emplacement.

(2) If POC has a current location where the failure occurred, use that data for navigation initialization. To use position data obtained from FDC in the step above, box NAV UPDATE on the SETUP AND INFORMATION menu, press SELECT key and a NAV SUBSYSTEM UPDATE menu will be displayed. Box GET FDC PRPT POSN and press SELECT key. Press USE ALL key, and AFCS will use the FDC reported position data and return to the SETUP AND INFORMATION menu.

(3) Another howitzer with an operational DRUH and AFCS can pull into failed howitzer's position (left hub to left hub) and provide navigation data to be entered on the keyboard.

**NOTE**

If no FDC-provided Move Order is expected after AFCS initialization, then the Sectors of Fire must be changed to those provided by the FDC prior to the failure. Sector of Fire entries must be completed prior to inputting a manual Move Order.

(4) The failed howitzer can be taken to a surveyed point and navigation initialized from survey data.

d. Ammo Inventory. To use ammunition inventory data obtained from FDC in the step above, box AMMO INVENTORY on the SETUP AND INFORMATION menu, press SELECT key and INVENTORY MANAGEMENT menu will be displayed. Box EDIT FDC PROVIDED and press SELECT key. When the FINISHED key is pressed the ammunition inventory shall be reviewed to insure each group of projectiles has at least one propellant and each group of propellants has at least one projectile. If a projectile is found without a propellant or a propellant without a projectile, AFCS will display PROJECTILE/PROPELLANT MISMATCH menu. Pressing the CONTINUE Softkey on this menu will return operator to the INVENTORY MANAGEMENT menu, at which time the operator has to update SHELL/PROP inventory. On the next INVENTORY MANAGEMENT menu, press FINISHED to accept the FDC PROVIDED data. If you want to check the ammo inventory for accuracy, then box and select UPDATE SHELL, UPDATE PROP, and UPDATE FUZE one at a time (para L-6.2k(5)).

e. Site Definition. To use Site data obtained from FDC in the step above, box SITE DATA on the SETUP AND INFORMATION menu, press SELECT key and SITE DEFINITION menu will be displayed. Box GET FDC SITE and press SELECT key (This option will only be available if the POC has sent an AFU mask to the AFCS). Press USE ALL, and the FDC provided Site Data will be used by the AFCS.

## L-7 AFCS TRAVEL MODE.

During the travel mode the navigation system provides a continuous position data display to the operator. The data displayed on the EL Panel will show UTM coordinates for both position and destination. Also included is a graphic display showing where the vehicle is traveling in relation to destination. After alignment, the AFCS will automatically go into travel mode when the howitzer starts to move.

### L-7.1 Movement.

Once the howitzer has been initialized and the navigation system has had time to align, a CANCEL SOFTKEY will appear on the main menu. To view a SECTION IN ORDER AT INITIALIZATION POINT screen, press the CANCEL SOFTKEY

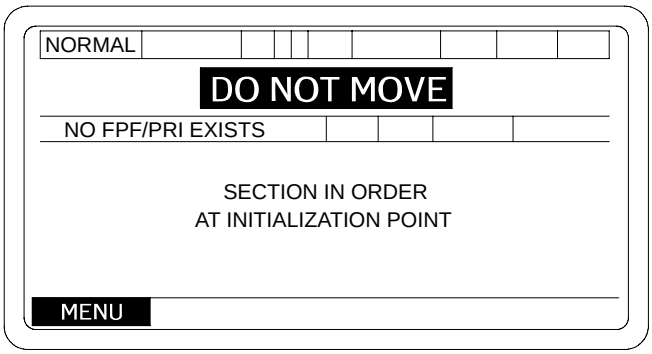


06pc148m

**NOTE**

- DO NOT MOVE the howitzer until you see OK TO MOVE OR SHOOT, ACK message.
- You may then move the howitzer or accept fire missions, but you can expect ZUPT requests during moves if the ALN_ _ _S is still counting down.

L-7.1.1 Move Order. Upon receipt of a Move Order, an audio alert will sound and an OPERATOR ALERT and a STEERTO/EMPLACEMENT screen will automatically appear if the system display was at a SECTION IN ORDER screen. If the SET UP AND INFORMATION screen is displayed a MOVE ORDER alert will appear in field 3 of the screen, and an OPERATOR ALERT, “MOVE MISSION” “ACK”, will be displayed and the CANCEL soft key must be pressed to display the STEERTO/EMPLACEMENT screen. Once the vehicle has moved about 25 meters an audible and soft key alert “PRESS ACK WHEN TUBE STOWED” “ACK” will be displayed. Acknowledge the tube is stowed and press “ACK” soft key.

# L-7 AFCS TRAVEL MODE - CONTINUED

## L-7.1 Movement - Continued

L-7.1.1 Move Order - Continued

STEERTO display screens:

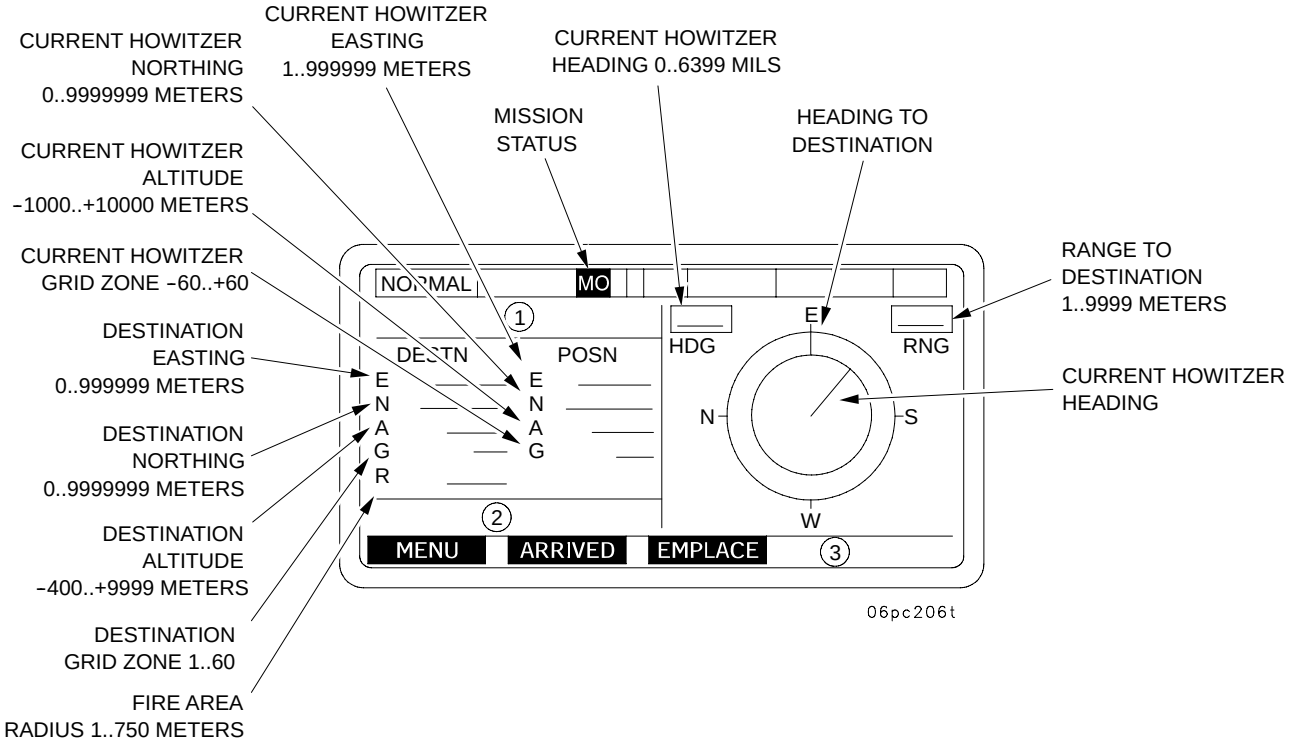


(1) "STEERTO FIRE AREA" - Destination is Fire Area
"STEERTO INIT POINT" - Destination is Initialization point
"STEERTO LOG POINT" - Destination is Logistics Point
"STEERTO FIRE POINT" - Destination is Fire Point

(2) "ORDERED MOVE IN PROGRESS"
"STOP MOVING AND WAIT"
"MOVE IN PROGRESS"
"NO AUTHORITY OR ORDERS TO MOVE"
"AWAITING START OF ORDERED MOVE"
"DO NOT START ORDERED MOVE"

(3) "ZUPT REQUIRED"
"NAV POS UPDATE REQUIRED"

# L-7 AFCS TRAVEL MODE - CONTINUED

## L-7.1 Movement - Continued

L-7.1.1 Move Order - Continued

The STEER TO FIRE AREA screen contains the following:

a. MO - Describes Move Order status.

b. Deleted.

c. DESTN - Indicates destination coordinates: (E) Easting, (N) Northing, (A) Altitude, (G) Grid Zone, (R) Radius of operating area,

d. POSN - Indicates present howitzer position: (E) Easting, (N) Northing, (A) Altitude, (G) Grid Zone.

e. HDG - Howitzer's numerical heading in Mils (Azimuth).

f. RNG - Range to destination in radial distance.

g. Graphic Display - N, E, S, W on outer circle, indicates North, East, South and West and rotates like a compass. The line running from the center of display to edge of the inner circle indicates present vehicle heading. The line between the inner and outer circle indicates the desired heading. When these two lines are aligned, the vehicle is traveling toward destination.

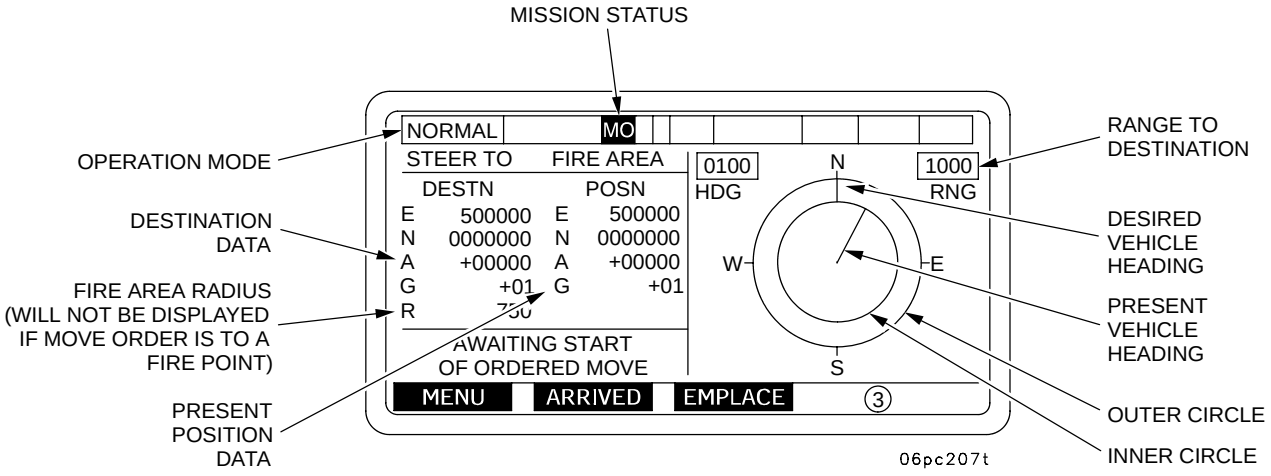

# L-7 AFCS TRAVEL MODE - CONTINUED

## L-7.1 Movement - Continued

L-7.1.2 Moving. During movement of the howitzer, the STEER TO FIRE AREA screen will assist the operator in locating his destination. While the howitzer is on the move, the following will occur:

a. The graphic portion of the display will indicate the howitzer's movement by the outer circle of the display moving according to the vehicle heading. The line from center of the display to the inner circle will move as the howitzer changes directions.

b. The alphanumeric portion of the display under POSN will provide the operator with his current position constantly. The display above HDG will change as the howitzer changes headings and the display above RNG will change to indicate whether the movement is away from destination (increase) or toward destination (decrease).

c. Navigation system update may occur (zero velocity update) to maintain location accuracy.

L-7.1.3 Zero Velocity Updates. "Periodic Zero Velocity Updates (ZUPT) may be required if the VMS fails or is out, and the GPS is not valid. ZUPTs are required to increase the accuracy of the Navigation Subsystem. To insure proper Navigation Subsystem Operation and to maintain system performance accuracies, ALL Requested ZUPTs must be honored." When an update is required, the AFCS will notify the operator with an audible alert and "ZPT" will appear in Field 6 and a soft key alert "ZUPT REQUIRED", "ACK". To accomplish a ZUPT, perform the following steps:

a. Stop the vehicle as soon as possible after the alert (the less time traveled between each ZUPT, the better the system accuracy).

b. Press ACK key to acknowledge operator alert.

c. Remain stopped until ZUPT is complete. ZUPT is done automatically during this period.

When the ZUPT is complete, another operator alert will be displayed, "ZUPT NO LONGER REQUIRED", "ACK". "ZPT" is no longer displayed in status line. Press ACK key, then vehicle movement can be continued.

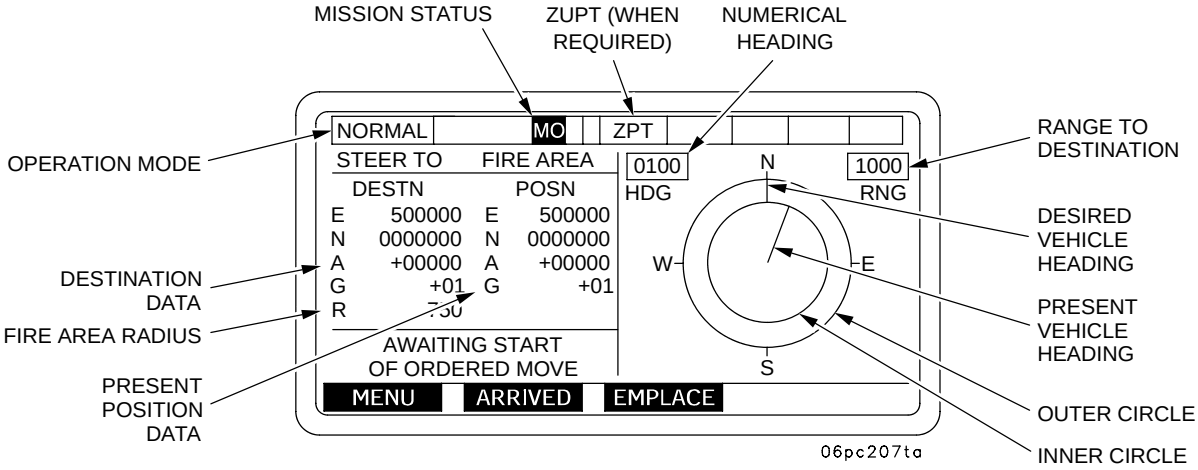

# L-7 AFCS TRAVEL MODE - CONTINUED

## L-7.1 Movement - Continued

L-7.1.4 Moving with Navigation System Degraded. If a navigation system failure occurs while the howitzer is moving, the operator will be alerted visually with a NAVIGATE ON YOUR OWN TO DESTINATION display. The chief of section must use established navigation procedures to reach the destination shown. If only the PLGR is operational there will be no HDG information on the display.

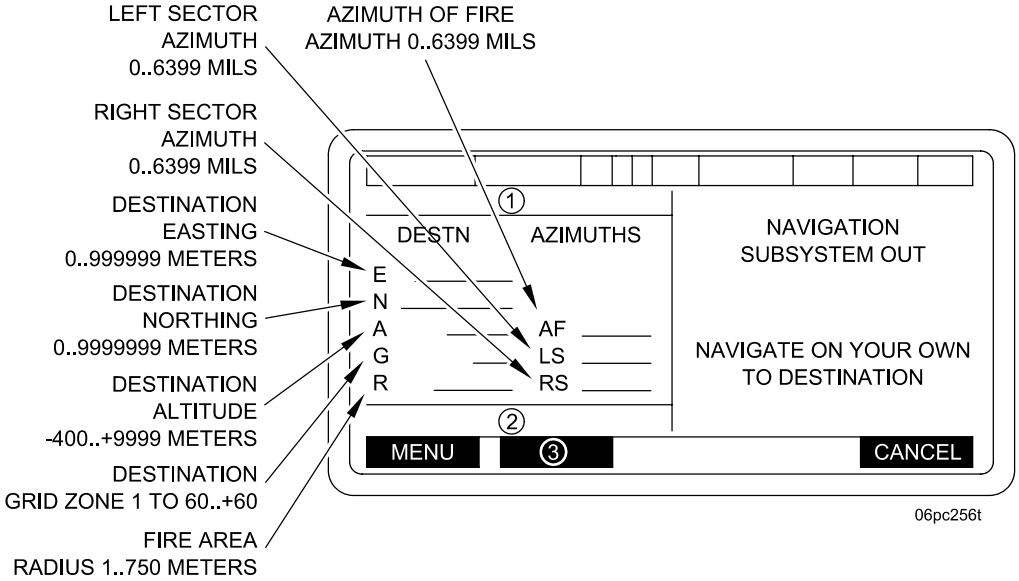


(1) "DEGRADED FIRE AREA" - Destination Is Fire Area

"DEGRADED INIT POINT" - Destination Is Initialization Point

"DEGRADED LOG POINT" - Destination Is Logistics Point

"DEGRADED FIRE POINT" - Destination Is Fire Point

(2) "ORDERED MOVE N PROGRESS"

"STOP MOVING AND WAIT"

"MOVE IN PROGRESS"

"NO AUTHORITY OR ORDERS TO MOVE"

"AWAITING START OF ORDERED MOVE"

"DO NOT START ORDERED MOVE"

(3) "MOVING" soft key only appears when the Navigation System is DEGRADED or OUT. Press "MOVING" soft key after vehicle starts moving to inform the navigation system that the vehicle is on the move. Press "ARRIVED" key when vehicle has arrived at destination.

# L-7 AFCS TRAVEL MODE - CONTINUED

## L-7.2 Emplacement Fire Point/Fire Area.

When the howitzer enters the radius the AFCS will display the Emplacement at a FIRING AREA/POINT screen depending on type of MOVE ORDER received.

The EMPLACE FIRE POINT screen is also used for DESTINATION TYPES, INITIALIZATION POINT and LOGISTICS POINT emplacement.

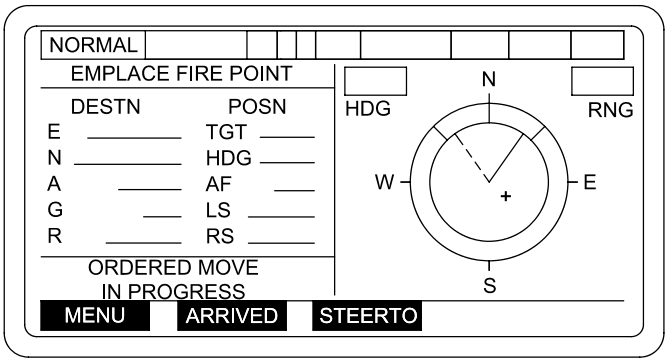


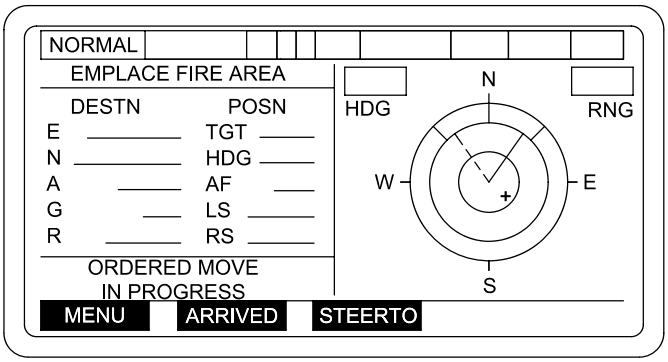


06pc257t

# L-7 AFCS TRAVEL MODE - CONTINUED

## L-7.2 Emplacement Fire Point/Fire Area - Continued

EMPLACE FIRE AREA Screen - The data on the EMPLACE FIRE AREA screen is the same as the STEER TO FIRE AREA screen with the following exceptions:

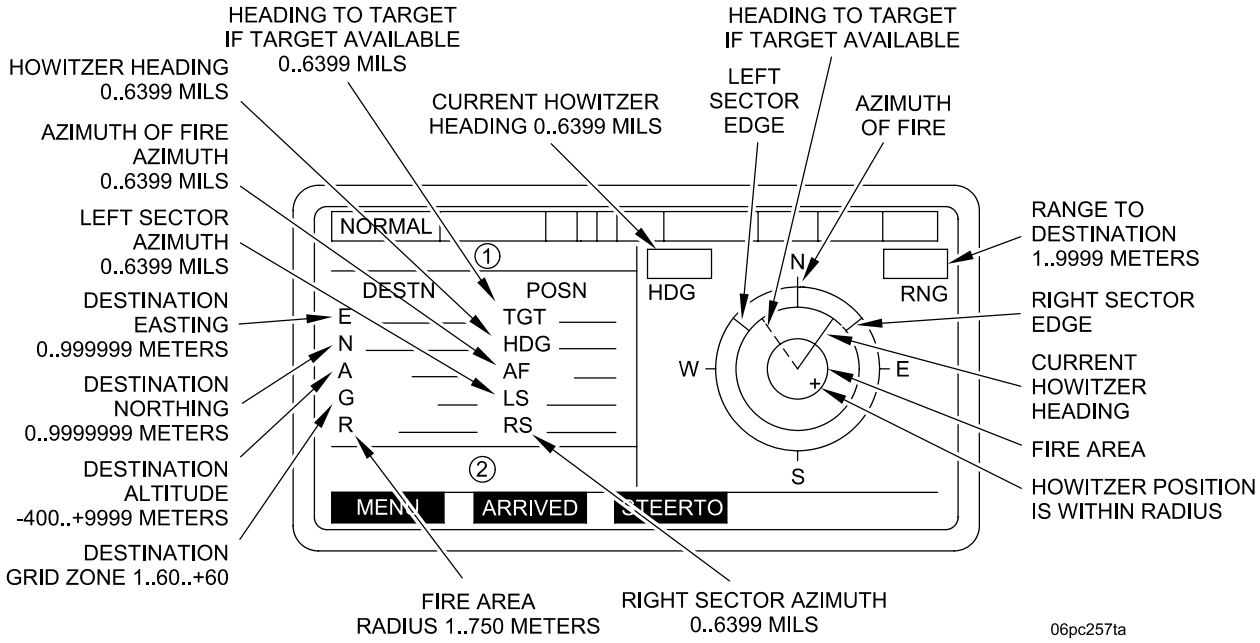


(1) "EMPLACE FIRE AREA" - Destination Is Fire Area
"EMPLACE INIT POINT" - Destination Is Initialization Point
"EMPLACE LOG POINT" - Destination Is Logistics Point
"EMPLACE FIRE POINT" - Destination Is Fire Point

(2) "ORDERED MOVE IN PROGRESS"
"STOP MOVING AND WAIT"
"MOVE IN PROGRESS"
"NO AUTHORITY OR ORDERS TO MOVE"
"AWAITING START OF ORDERED MOVE"
"DO NOT START ORDERED MOVE"

# L-7 AFCS TRAVEL MODE - CONTINUED

## L-7.2 Emplacement Fire Point/Fire Area - Continued

a. Plus Sign - Represents the vehicle. When the vehicle is within the allowable move area assigned by the Platoon Operation Center (POC), the "+" will appear on the display. As the vehicle moves, the plus sign will also move, indicating direction of travel.

b. Inner Circle - Represents the Allowable Movement Area and will vary in size. This is determined by the radius of the Fire Area and is assigned by POC with a Move Order. This circle is an Emplacement Aid.

**NOTE**

- If EMPLACEMENT screen was accessed prior to arriving at next firing area the EMPLACEMENT screen may not display automatically.
- Once the vehicle is within the inner circle (shown by the + sign) the CHIEF OF SECTION may choose his emplacement position to take advantage of terrain features.

c. The line running from middle circle to outer circle between N and E represents Right Sector of Fire and the line between N and W represents Left Sector of Fire. The line under N represents Azimuth of Fire. The sector of fire is assigned by POC with the Move Order.

d. Solid Line - Represents the current heading. It extends from the center of the smallest circle to the edge of the middle circle. When this line is aligned with the line under the "N," the vehicle is travelling toward the ordered destination.

e. Dotted Line - Represents the gun-target line to a Final Protective Fire (FPF) target (if stored on AFCS) and is designated by the POC.

f. Destination - Represented by the intersection of the solid line and the dotted line at the center of the smallest circle.

g. Azimuths - Display of azimuths in Mils to TGT (FPF target if one exists), HDG (present howitzer heading), AF (Azimuth of Fire), LS (Left Sector of Fire), RS (Right Sector of Fire).

# L-7 AFCS TRAVEL MODE - CONTINUED

## L-7.2 Emplacement Fire Point/Fire Area - Continued

L-7.2.1 Emplacing. Once the plus sign is within the designated firing area the howitzer has reached it's destination. The howitzer is then maneuvered until vehicle heading (solid line from the center of the smallest circle to the edge of the middle circle) is aligned as closely as possible with the Azimuth of Fire Line (center solid line between the middle and outer circle). When these lines are aligned, the howitzer is roughly laid on the Azimuth of LAY.

**NOTE**

- DRUH position data improves approximately 30 seconds after the howitzer is stopped. The chief of section has the option of awaiting this time and then pressing the ARRIVED soft key to achieve optimum positioning data. However, this option should not be considered during an emergency fire mission. (EMERGENCY MISSION)
- Before pressing ARRIVED key you must record your position data and Azimuth of Fire (Base Azimuth) in case the AFCS fails.
- If cab-side VMS modem is disconnected and position data is not available from the PLGR, the DRUH position data will degrade even though the howitzer is not moving. This data may degrade to the point where the navigation subsystem will be declared out.
- The soft key under ARRIVED on the MOVE ORDER screen must be pressed before the gun tube is unstowed from travel lock. This action establishes the TUBE STOW (travel lock) position. Pressing the STOW key will move the tube back to this azimuth.
- If EMPLACEMENT screen was accessed prior to arriving at next firing area the EMPLACEMENT screen may not display automatically.
- Once the vehicle is within the inner circle (shown by the + sign) the CHIEF OF SECTION may choose his emplacement position to take advantage of terrain features.

# L-7 AFCS TRAVEL MODE - CONTINUED

## L-7.2 Emplacement Fire Point/Fire Area - Continued

L-7.2.1 Emplacing - Continued

- When emplacing the howitzer, the Azimuth of Fire (Azimuth of LAY) from the Move Order is the azimuth the AFCS holds as the "Base Azimuth" (the 3200 deflection reference position). This is the azimuth used by the AFCS to compute ballistic data, and is also sent to the FDC in the PIECE STATUS (HOW: UPDATE) message for ballistic computations at the FDC.

- When emplacing at a FIRING POINT the howitzer range must be 50 meters or less. (Optimum 10 meters or less)

Press the ARRIVED soft key on the EMPLACE FIRE AREA or Fire Point Site Definition screen to display a SITE DEFINITION screen. Take the tube out of travel lock.

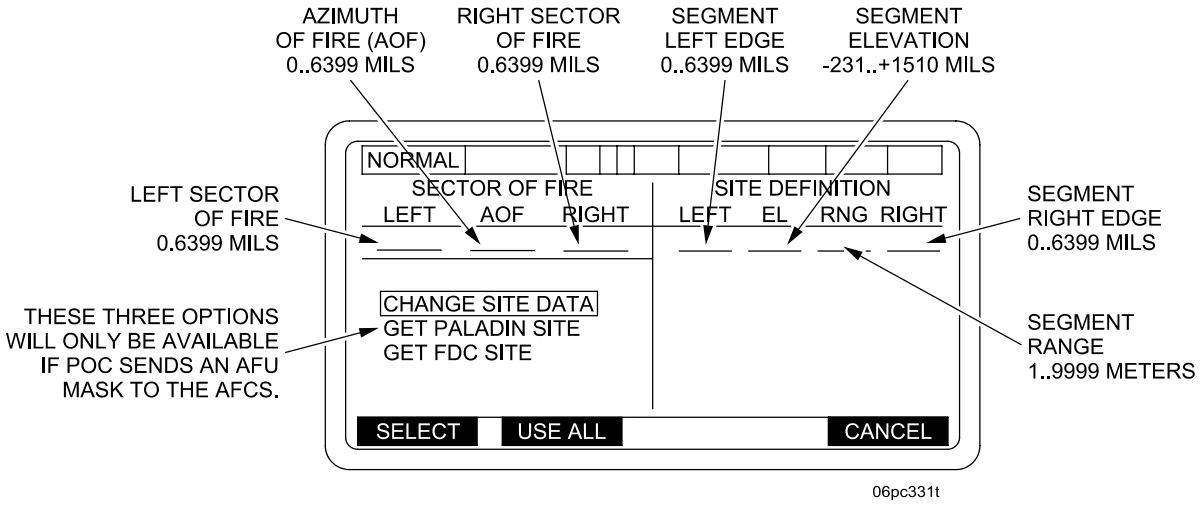


AUTOMATIC SELECTION, "BOXING" will occur starting from field LEFT and then continuing from LEFT to RIGHT, to field EL RNG and RIGHT, after each previous entry has been ENTERED.

# L-7 AFCS TRAVEL MODE - CONTINUED

## L-7.2 Emplacement Fire Point/Fire Area - Continued

L-7.2.2 Site Data. Identifies left and right limits, range and elevation in mils, and is used to ensure that all rounds clear crests within the howitzer's SECTOR OF FIRE. Up to eight sets of site definition data can be entered. Site definition data is determined using the same procedures as SITE TO CREST (sighting through the cannon tube). This data is entered using the SITE DEFINITION screen as follows:

a. Obtain SECTOR OF FIRE data from POC. Normally Azimuth of Fire, Left and Right Sector limits will be provided by the POC in the Move Order and will be displayed automatically on the SITE DEFINITION menu on the left side of the screen under LEFT AOF RIGHT headings.

b. Press the DELETE key to remove SITE DATA from previous occupation. Box in limit under column to be changed and press the SELECT key.

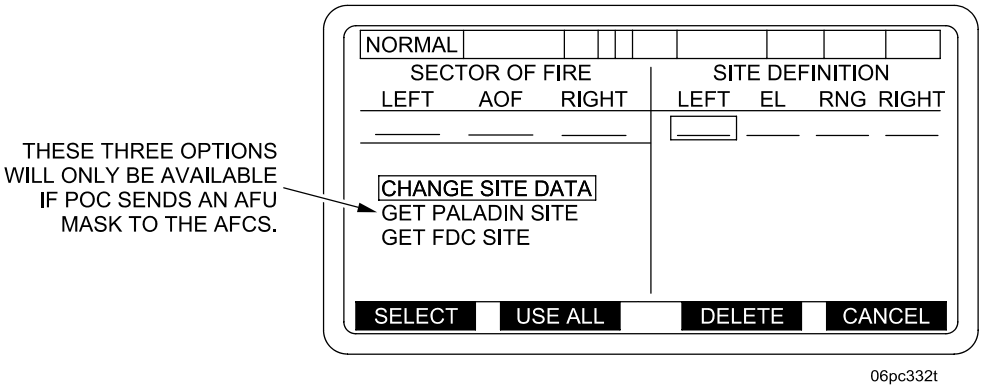


c. One Line SITE DATA (For Initial Occupation). Pressing the ARRIVED key the COS must obtain One Line SITE DATA. AFTER removing the gun tube from the travel lock the COS brings the cursor box to the left limit and presses SELECT, then traverses the gun tube to the left while monitoring the Azimuth readout until he reaches at least one mil beyond the Left limit then press ENTER. While the GUNNER sights through the gun tube the COS elevates or depresses the gun tube to obtain immediate crest. COS brings the cursor box to the Right limit and presses SELECT then COS traverses the gun tube to the Right limit while the GUNNER sights through the gun tube. COS elevates gun tube upon the COMMAND "Elevate" from the GUNNER when the GUNNER needs to clear an obstruction until the COS reaches the Right limit while monitoring the Azimuth readout, then presses ENTER. Before moving the gun tube, COS then cursors to the entry under EL, presses SELECT and ENT to obtain elevation to immediate Crest. COS then cursors to entry under Range, presses SELECT and ENT and inputs RANGE TO CREST from the numeric keypad and presses ENT. Upon completion of One Line SITE DATA the COS then presses USE ALL to input MIN QE.

# L-7 AFCS TRAVEL MODE - CONTINUED

## L-7.2 Emplacement Fire Point/Fire Area - Continued

L-7.2.2 Site Data - Continued

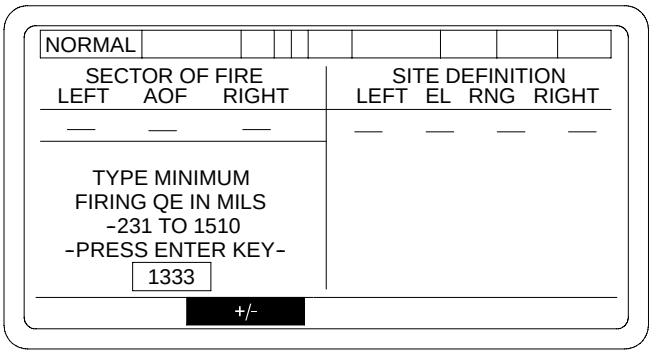


06pc215t

Pressing the ENTER key will display SECTION IN ORDER menu. During NORMAL OPERATIONS the last value entered shall be displayed.

d. MINIMUM QUADRANT ENTRY. Upon completion of One Line SITE DATA, press USE ALL and a display will appear in the left side of the SITE DEFINITION screen. Enter the MIN QE obtained from the POC for the current position. Upon voice verification of the MIN QE with the POC, press the ENT key. This will display the SECTION IN ORDER at FIRING AREA/POINT screen.

e. Send piece status to POC.

**NOTE**

COS will obtain MAX QE and send updated piece status to POC (see para L-8.7.3).

L-7.2.2.1 SITE DEFINITION screen display. With the GUNNER sighting through the tube the COS elevates or depresses the gun tube to obtain immediate Crest. COS traverses right while the GUNNER looks through the gun tube. When an obstruction appears, data for the Left limit SITE DEFINITION can be entered by pressing the ENT key. The SITE DEFINITION screen with Left Azimuth will be displayed. perform steps d and e to establish 6400 mils SITE DEFINITION.

**NOTE**

This procedure is conducted as part of Position Improvement.

# L-7 AFCS TRAVEL MODE - CONTINUED

## L-7.2 Emplacement Fire Point/Fire Area - Continued

L-7.2.2 Site Data - Continued

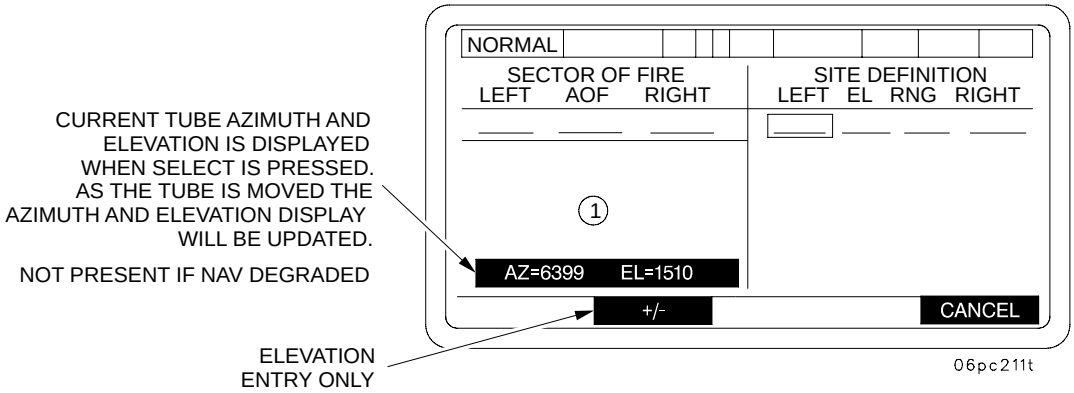


(1) THE FOLLOWING PROMPTS ARE DISPLAYED DEPENDING ON WHICH FIELD IS SELECTED:

| | |
|---|---|
| **WHEN "LEFT" IS SELECTED**<br>MOVE TUBE OR TYPE<br>LEFT EDGE OF SITE<br>IN MILS:<br>0 TO 6399<br>-PRESS ENT KEY- | **WHEN "EL" IS SELECTED**<br>MOVE TUBE OR TYPE<br>ELEVATION OF SITE<br>IN MILS:<br>-231 TO 1510<br>-PRESS ENT KEY- |
| **WHEN "RNG" IS SELECTED**<br>TYPE RANGE TO SITE<br>IN METERS:<br>1 TO 9999<br>-PRESS ENT KEY- | **WHEN "RIGHT" IS SELECTED**<br>MOVE TUBE OR TYPE<br>RIGHT EDGE OF SITE<br>IN MILS:<br>0 TO 6399<br>-PRESS ENT KEY- |

**NOTE: MASK HEIGHT CANNOT EXCEED 10,000 METERS, THEREFORE:**

(A) UPPER LIMIT ON RANGE WILL CHANGE DEPENDING ON CURRENT MASK ELEVATION

(B) UPPER LIMIT ON ELEVATION WILL CHANGE DEPENDING ON CURRENT MASK RANGE

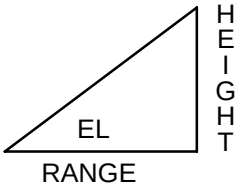


**NOTE: WHEN CURRENT TUBE POSITION IS USED TO SET MASK ELEVATION:** IF THE RANGE FIELD CONTAINS AN ENTRY WHICH RESULTS IN A MASK EXCEEDING 10,000 METERS, THE RANGE FIELD WILL BE RESET TO THE MAXIMUM ALLOWED VALUE AND THE FOLLOWING MESSAGE WILL BE DISPLAYED: **"WARNING - RANGE SET TO MAXIMUM", "ACK"**

AUTOMATIC SELECTION, "BOXING" will occur starting from field LEFT and then continuing from LEFT to RIGHT, to field EL, RNG, and RIGHT, after each previous entry has been ENTERED.

# L-7 AFCS TRAVEL MODE - CONTINUED

## L-7.2 Emplacement Fire Point/Fire Area - Continued

L-7.2.2 Site Data - Continued

a. Select column (LEFT) to display left limit SITE DEFINITION screen. Data for this limit can be typed in, or use tube position. Enter data by pressing ENT key.

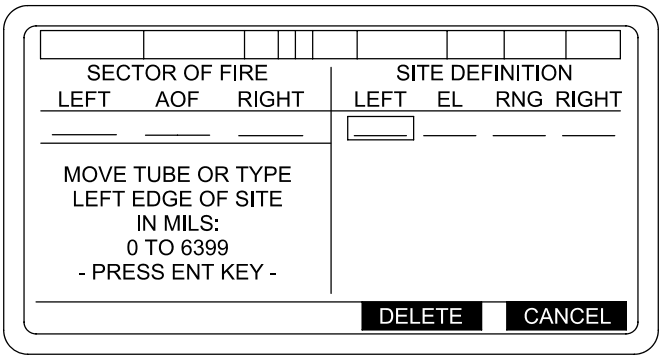


06pc329t

**NOTE**

Numerical value must be entered before sign. Default sign is (+).

Upper limit on elevation will change depending on current mask range. If range is blank, default shall be 1510.

b. Select next limit column (EL) to display Elevation SITE DEFINITION screen. Enter elevation data in the same manner as left limit (type in data or use gun tube position). If elevation is below zero, press +/- key to place minus sign in front of numbers to be entered (used only when typing in data). Press ENT key.

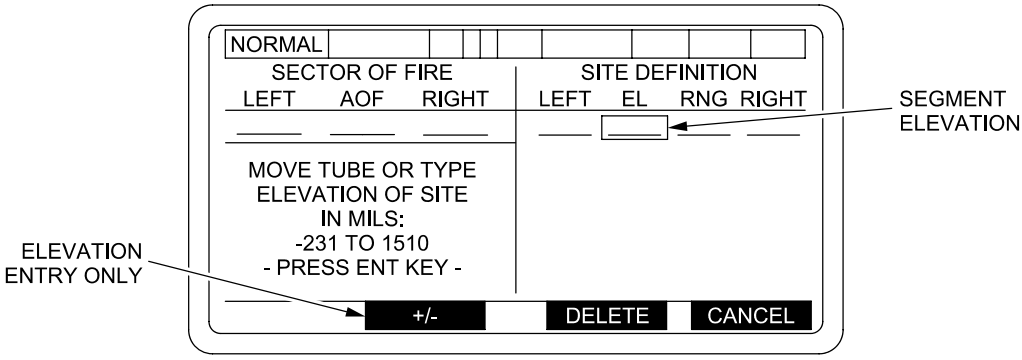


06pc330t

**NOTE**

Upper limit on elevation will change depending on current mask elevation. If elevation is blank, default shall be 9999.

# L-7 AFCS TRAVEL MODE - CONTINUED

## L-7.2 Emplacement Fire Point/Fire Area - Continued

L-7.2.2 Site Data - Continued

c. Select next limit column (RNG) to display the Range SITE DEFINITION screen. Enter range to crest and press ENT key. (Data for this must be typed in; gun tube position cannot be used.)

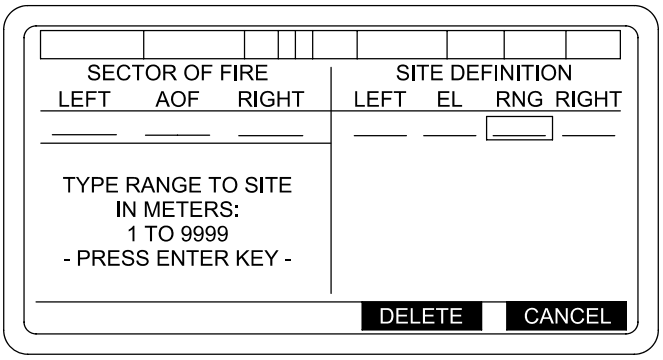


06pc334t

d. Select next limit column (RIGHT) to display the right limit SITE DEFINITION screen. Data for this limit can be typed in, or use tube position. Enter data by pressing ENT key.

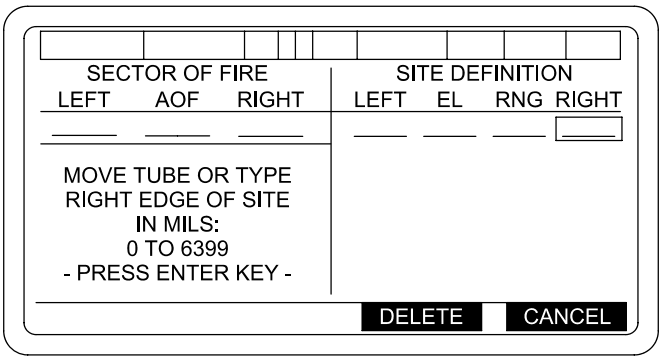


06pc335t

e. Using arrow key, move cursor box to next available line and to the left and identify next obstruction.

f. Sequence can be repeated as many as seven times if needed.

L-7.2.3 Section In Order. When all data is correct, press ENTER key. This will bring up a SECTION IN ORDER WITHIN FIRE AREA or SECTION IN ORDER AT FIRE POINT screen depending on whether the Move Order was a move to a FIRE AREA or FIRE POINT. An ordered move of any other type would be indicated as such in field 11 of the menu.

# L-7 AFCS TRAVEL MODE - CONTINUED

## L-7.2 Emplacement Fire Point/Fire Area - Continued

L-7.2.3 Section In Order - Continued

### NOTE

- When SECTION IN ORDER screen is displayed, the commanded deflection (CMD DEFL) may be either: 1) the Azimuth of Fire (Azimuth of LAY) from the Move Order, expressed at 3200 deflection. Since this is also the "Base Azimuth" position (the difference between the 3200 reference and the ordered Azimuth of LAY); or 2) if a Final Protective Fire (FPF) or Priority (PRI) target has been designated by the POC, the CMD DEFL will be the deflection from "Base Azimuth" to the FPF; or 3) when a Manual Move Order has been done, the CMD DEFL is the default Azimuth of Fire (Base Azimuth) entered upon initialization.

- LOAD/LAY and STOW will not be displayed unless the gun switch is in the ON position.

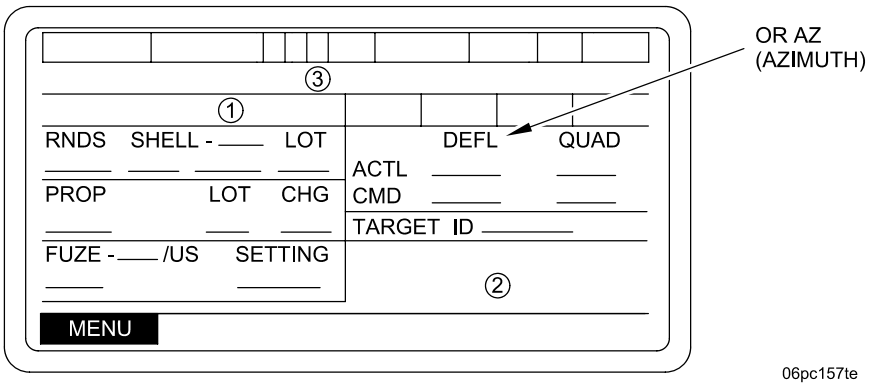


06pc157te

Listed below are the legal values for each field of the SECTION IN ORDER display:

RNDS = Number of rounds remaining to fire 0..99 or blank
SHELL = Shell model and mnemonic or blank
SHELL LOT = A..Z or blank
PROP = Propellant model
PROP LOT = A..Z or blank
PROP CHG = Propellant charge designator (see Table L-1) or blank
FUZE = Fuze mode and mnemonic
FUZE SETTING = Computed fuze setting, "PD" or "DELAY"
DEFL (or AZ) = 0.0..6399.9 mils
QUAD = -200.0..+1600.0 mils
TARGET ID = FPF/PRI target identification if a target exists; otherwise blank

# L-7 AFCS TRAVEL MODE - CONTINUED

## L-7.2 Emplacement Fire Point/Fire Area - Continued

L-7.2.3 Section In Order - Continued

Instructions and warnings which could appear on the SECTION IN ORDER display:

1 Blank
COMPUTING FPF/PRI
NO FPF/PRI EXISTS
UNABLE TO COMPUTE
SECTOR VIOLATION
MASK VIOLATION
INSUFFICIENT AMMO
NO FUZE INVENTORY
NO PROJ INVENTORY
NO PROP INVENTORY
BAD PROJ LOT/MODEL
NO AMMO INV COMBO
INVALID AMMO COMBO
INSUFFICIENT RANGE
NO SOLUTION
NOT FFE TYPE MISSION
UNASSIGNED FPF/PRI
TARGET TOO CLOSE
MAX TUBE EL VIOLATION

2 SECTION IN ORDER AT FIRE POINT
SECTION IN ORDER WITHIN FIRE AREA
SECTION IN ORDER IN ROUTE POINT (Only displayed when the destination is not reached for a Fire Point or a Fire Area)

3 DO NOT MOVE/DO NOT LOAD
DO NOT MOVE
MOVES ALLOWED
MOVES ALLOWED/DO NOT LOAD

L-7.2.4 Establish Distant Aiming Point or Set Collimator (Optional).

**NOTE**

If time permits, the crew should set out collimator or select a DAP and set the PANTEL with the tube "Base Azimuth". If this is not possible immediately, traverse back to "Base Azimuth" using one of the following procedures based on the conditions indicated on the SECTION IN ORDER screen.

a. Use this procedure when the CMD DEFL reads 3200 deflection and there is no FPF nor PRIORITY (PRI) target displayed on the SECTION IN ORDER screen. Under these conditions, CMD DEFL is using the Azimuth of Fire (Base Azimuth). To move the tube to Base Azimuth, 1) Turn on hydraulic power, 2) Set GUN SERVO switch to ON, and 3) Press/hold the LOAD key until the LOAD indicator is highlighted in the upper right corner of the screen. Tube is now laid on Azimuth of Fire (Base Azimuth) and both the ACTL DEFL and CMD DEFL should read 3200. 4) Sight onto the Collimator or the DAP and set 3200 Deflection on the PANTEL.

# L-7 AFCS TRAVEL MODE - CONTINUED

## L-7.2 Emplacement Fire Point/Fire Area - Continued

L-7.2.4 Establish Distant Aiming Point or Set Collimator (Optional) - Continued

b. Use this procedure when the CMD DEFL shows a deflection other than 3200 and there is either an FPF or PRIORITY (PRI) target displayed on the SECTION IN ORDER screen. The CMD DEFL is the Firing Azimuth for the FPF/PRI target, so the LOAD key cannot be used to move the tube to 3200 deflection. Under these conditions, 1) use the Hydraulic Power Handle Controls to traverse the tube until the ACTL DEFL reads 3200 deflection. Tube is now laid on Center of Sector (Base Azimuth). 2) Sight onto the Collimator or the DAP and set 3200 Deflection on the PANTEL.

**NOTE**

If the AFCS fails, use the Azimuth of Fire recorded during emplacement as Azimuth of Lay (Base Azimuth) and use reciprocal lay procedures with the aid of an operational howitzer.

L-7.2.5 Final Laying of Gun Tube at FIRING AREA. It is necessary to lay the gun tube on the Azimuth of Fire (from MOVE ORDER) or the FPF/PRI azimuth/deflection. The SECTION IN ORDER screen will show a difference between the ACTL DEFL and the CMD DEFL. The ACTL and CMD values must be the same for the gun tube to be layed. To accomplish this: 1) set GUN SERVO switch to ON, and 2) depress and hold LOAD key (para L-4). The gun will traverse to the CMD DEFL (match ACTL and CMD) and to the LOAD ELEVATION stored at initialization. When the LOAD indicator is highlighted, release the LOAD key.

## L-8 AFCS FIRE MISSION.

Fire missions are usually generated as a result of a message from the FDC to the AFCS. Included in the message are target location, method of control, and ammunition to fire (if ammunition is not specified the AFCS will default to its own selection). When the message is received by the AFCS, a FIRE MISSION display is displayed on the DU and an audible alert is sounded through the intercom system. The Ballistics Computer will then compute the ballistics (azimuth and quadrant), based on ammunition data (projectile, propellant, and fuze), target location and the location of the howitzer (provided by the navigation system). The ballistic solution is then displayed on the FIRE MISSION display.

A typical FIRE MISSION display contains the following:

**WARNING**

**The crew compartment must be adequately ventilated during all firing using the LEAD FILTER or ventilation system in accordance with para 2-22.2.**

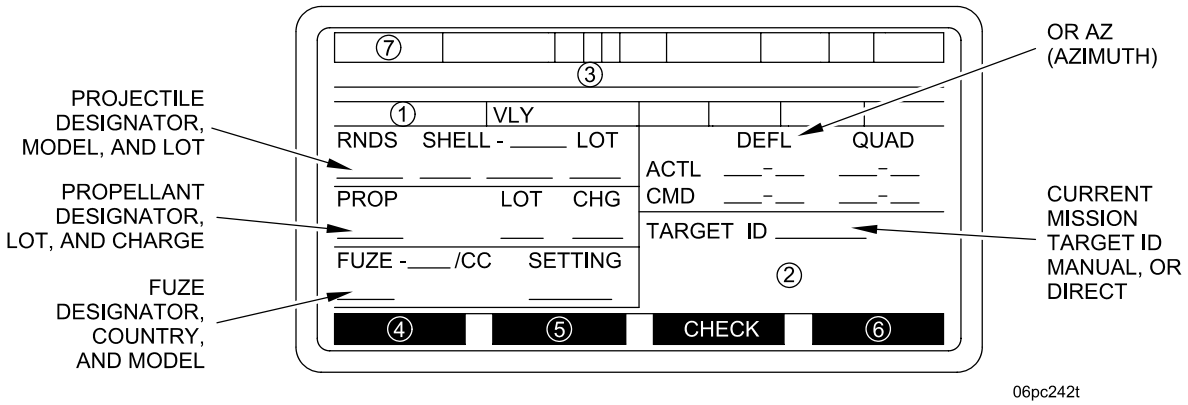


Listed below are the legal values for each field of FIRE MISSION display.

VLY / = Current volley being displayed; 1/1, 1/2 or 2/2

**NOTE**

The 1/1, 1/2, and 2/2 data shall not be displayed for operator initiated fire missions and missions that are in fire commands format.

RNDS = Number of rounds remaining to fire 1..9
SHELL = Shell model and mnemonic
SHELL LOT = A..Z
PROP = Propellant model
PROP LOT = A..Z
CHG = Propellant charge designator (see Table L-1)
FUZE = Fuze model, Country and mnemonic
SETTING = Computed fuze setting, “PD” or “DELAY”
DEFL (or AZ) = 0.0..6399.9 mils
QUAD = -200.00..+1600.0 mils
TARGET ID = Current mission target identification

## L-8 AFCS FIRE MISSION - CONTINUED

Instructions and warnings which could appear on the FIRE MISSION display:

(1) Blank = Fire mission is not a sheaf
SHEAF PT = This gun is participating in a multi-gun sheaf
SHEAF a/s = This run is conducting a single gun sheaf where: a..Current aimpoint number; b..Number of sheaf points

(2) Blank - Displayed when none of the following apply
SAFE FIRE AREA VIOLATION = The aimpoint or trajectory termination is outside of the received Safe Fire Area.*
REMEMBER TO UPDATE INVENTORY = Direct or manual fire mission and none of the following apply
WARNING TUBE IS NOT IN LAY POSITION = WC is operational and the tube is not in the lay window.
TUBE MUST BE LAID MANUALLY = WC is not operational
CALL FDC IF ROUND IN TUBE = Awaiting tube clear and crew not authorized to fire.
PRESS SHOT OR CLEAR TO ACK CEASELOAD = AFCS has received a ceaseload request.
Mim QE violated ACK
SECTOR OF FIRE VIOLATION = Gun-target line is outside the defined sector of fire.*
SITE VIOLATION = Firing parameters violate defined mask.*
INSUFFICIENT AMMO SHELL/FUZE/PROP = Insufficient inventory quantities*
INSUFFICIENT AMMO SHELL/FUZE = Insufficient inventory quantities*
INSUFFICIENT AMMO SHELL/PROP = Insufficient inventory quantities*
INSUFFICIENT AMMO FUZE/PROP = Insufficient inventory quantities*
INSUFFICIENT AMMO SHELL = Insufficient inventory quantities*
INSUFFICIENT AMMO FUZE = Insufficient inventory quantities*
INSUFFICIENT AMMO PROP = Insufficient inventory quantities*
MAX TUBE EL EXCEEDED = Computed QE exceeds the defined maximum tube elevation.*
MINIMUM QE VIOLATED = The Gun Tube has violated the minimum QE as entered by the AFCS operator in the Enter Minimum Firing QE Display.*

(3) FIRE WHEN READY = Fire at will
UNDER VOICE ORDERS = Manual fire mission
COMPUTING DO NOT LOAD = AFCS computing or waiting for operator response
DO NOT LOAD = Do not load missions
LOAD LAY THEN PRESS READY = At my command or Copperhead mission
WAIT FOR COMMAND = At my command after ready
WAIT NNN SECONDS = Time to fire mission or continuous interval mission. NNN maximum number is 999. If greater than 999 seconds = WAIT **** SECONDS
WAIT NNN SECONDS - FDC COMP = WAIT NNN SECONDS = Time to fire mission or continuous interval mission. NNN maximum number is 999. If greater than 999 seconds = WAIT *** SECONDS.
FIRE = COMMAND TO FIRE
FPF END OF MISSION = EOM or ceaseload during FPF
EARLY END OF MISSION = EOM received after load but before all rounds fired
CEASELOAD = Ceaseload received after load but before all rounds fired

## L-8 AFCS FIRE MISSION - CONTINUED

4 Blank indicates that none of the following apply:
SHOT = AFCS requires notification of round fired
READY = AFCS requires notification of operator ready to fire

5 Blank indicates that none of the following apply:
CLEAR = AFCS requires notification of tube clear
OTHER VLY = Other volley information is available for operator viewing

6 Blank indicates that none of the following apply:
ABORT = Fire mission other than direct or manual active
EOM = Direct or manual mission active

7 "MV" = A valid MV was received from the MVS.
"BAD MV" = An MV message was received from the MVS, but the data was not valid.
"NO MV" = No MV message was received from the MVS.

**NOTE**

Alerts listed in item 2 above with asterisks will result in an "OK TO SHOOT?" "YES" "NO" short error message to the AFCS operator.

The following alerts shall appear if the operator presses the LOAD or LAY keys and the tube transitions across the minimum quadrant elevation:

MINIMUM QE VIOLATED ACK

The Gun Tube has violated the minimum QE as entered by the AFCS operator in the Enter Minimum Firing QE Display. An audio alert shall sound until the ACK key is pressed.

MINIMUM QE NO LONGER VIOLATED ACK

The Gun Tube no longer violates the minimum QE as entered by the AFCS operator in the Enter Minimum Firing QE Display. An audio alert shall sound until the ACK key is pressed.

Fire Mission Received. When displayed, press ACK to confirm receipt of fire mission.

# L-8 AFCS FIRE MISSION - CONTINUED

## L-8.1 Platoon Operation Center.

Although the howitzer has the ability to compute its own firing data, the actual firing of a mission is controlled by the POC. The control method is included within the fire mission message and displayed on the FIRE MISSION screen. Control methods are as follows:

a. AT MY COMMAND. In this method, the POC controls when the howitzer is fired. (An example is a normal Copperhead mission.) The Method of Control field of the FIRE MISSION screen will tell the COS to LOAD, LAY, then press READY key. When these are accomplished, a message that the howitzer is ready to fire is sent to the POC. When the FIRE COMMAND is issued by the POC, an audible alert and an alternating tone is sounded and a FIRE prompt is displayed. If more than one volley is to be fired, the other volleys will be FIRE WHEN READY.

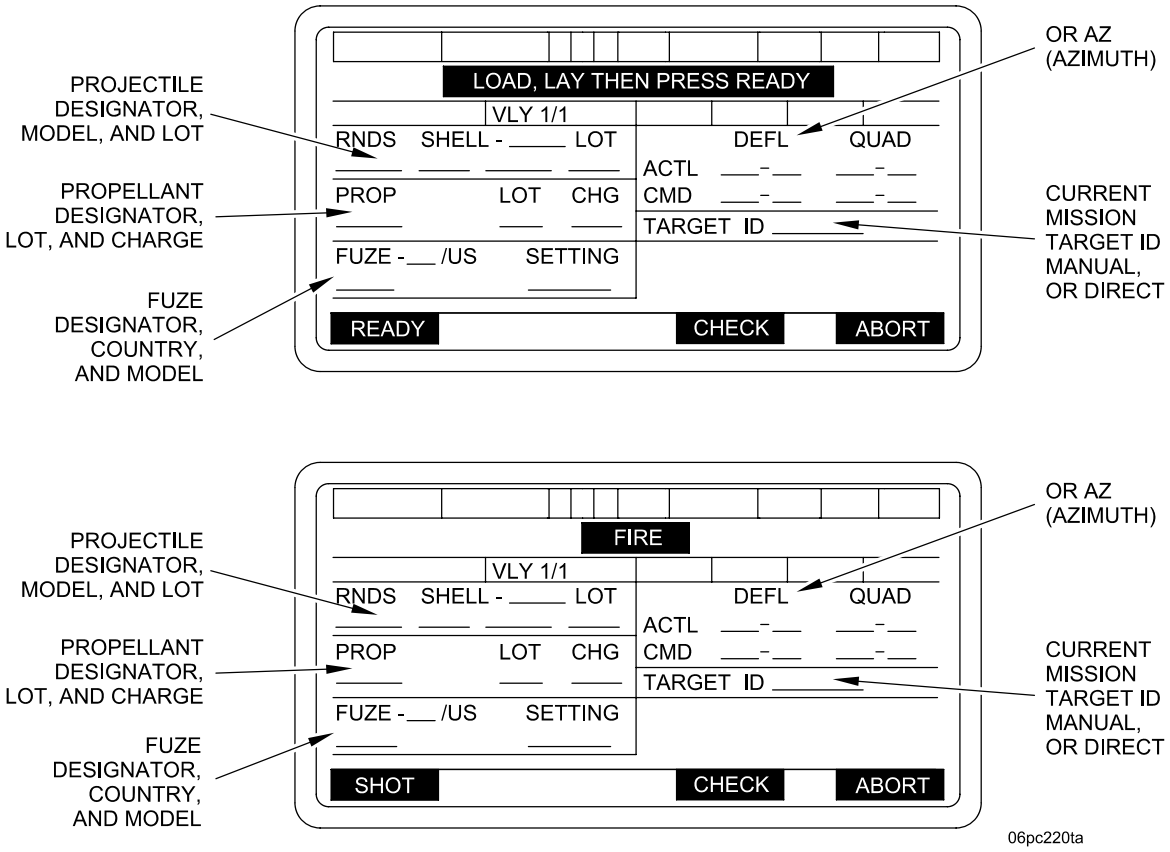

# L-8 AFCS FIRE MISSION - CONTINUED

## L-8.1 Platoon Operation Center - Continued

b. DO NOT LOAD. This is a restrictive command that prohibits loading and firing. This is used when it is anticipated that significant time will elapse between loading and firing. When the DO NOT LOAD command is canceled, then the FIRE command is issued, and the same audible and visual alerts will be received as in AT MY COMMAND.

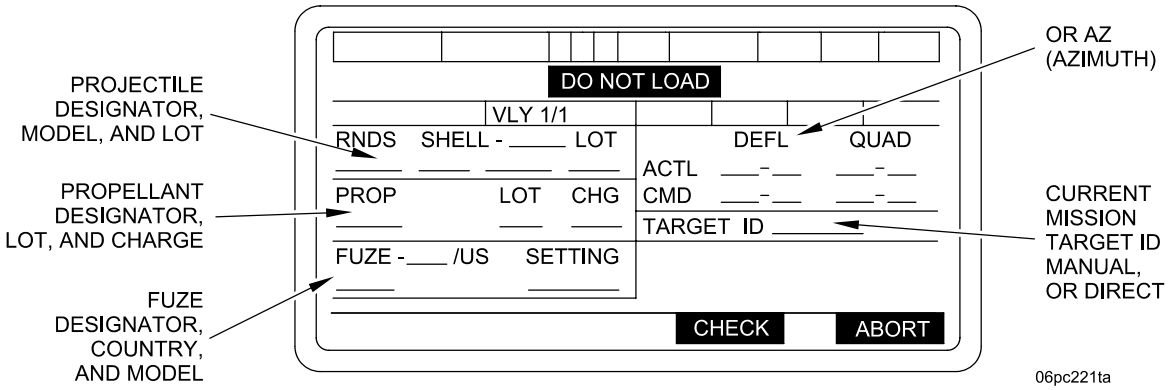


c. TIME TO FIRE (TTF) SEQUENCE. This sequence consists of the following:

(1) Ballistic sequencing is performed. (COMPUTING DO NOT LOAD)

(2) If no ABORT is performed during the ballistic sequencing the AFCS operator is given the data.

(3) The AFCS operator is told to “WAIT FOR XXXX SECONDS” where xxx is the number of seconds remaining until time to fire.

(4) The “WAIT FOR XXX SECONDS” prompt is updated each second.

(5) When the countdown has expired, the AFCS operator is told to “FIRE”.

(6) If this is not a FPF mission, then when the first shot out is detected and there is a Continuous Fire Interval specified processing continues using the Continuous Fire Interval sequence. If there are more rounds to fire, and a Continuous Fire Interval is not specified, the AFCS operator is told to “FIRE WHEN READY” (similar to when ready sequencing subsequent rounds). Otherwise, if shot out is not detected within 20 seconds then the mission is automatically ended.

If this is a FPF mission, then when shot out is detected the AFCS operator is told to “FIRE WHEN READY” again. This is repeated until the mission is ended and no rounds complete is generated.

(7) When rounds complete is detected the mission is automatically ended.

# L-8 AFCS FIRE MISSION - CONTINUED

## L-8.1 Platoon Operation Center - Continued

d. CONTINUOUS FIRE INTERVAL SEQUENCE. The Continuous Fire Interval sequence shall be as follows for the second and subsequent rounds in a mission where a continuous fire interval is specified.

(1) Following the first round fired using the sequences described above, the operator shall be told to "WAIT FOR XXX SECONDS" where xxx is the number of seconds remaining until time to fire.

(2) The "WAIT FOR XXX SECONDS" prompt shall be updated each second.

(3) When the countdown has expired, the operator is told to "FIRE".

(4) If all rounds in the mission have not been shot, processing will sequence through steps 1, 2, and 3 above.

(5) When rounds complete is detected, the mission is automatically ended.

## L-8.2 Firing Mission.

**WARNING**

**The crew compartment must be adequately ventilated during all firing using the LEAD FILTER or ventilation system in accordance with para 2-22.2.**

When a fire mission is received, visual as well as an audible alert is given. The visual alerts are FIREMSN in Field 2 and OPERATOR ALERT AND ACK display. The audible alert can be heard by all crewmembers. When a fire mission is in process, each crewmember will perform his portion of the following:

a. GUNNER and CANNONEER stow seats (if not previously stowed).

b. Driver starts engine and/or raises idle speed to 1000-1200 rpm.

c. COS issues the fire order (for example, 1 round HE; charge 4 green bag; Fuze Time, Time 25.0) and activates the HYDRAULIC POWER switch on the hydraulic control box and the GUN SERVO switch on the DU.

d. Cannoneer turns LEAD FILTER switch on the Accessory Control Box to ON and moves Vent Duct Control Handle into UP position.

e. GUNNER opens breech (first round only).

f. CANNONEER positions rammer to RAM position.

g. GUNNER prepares propellant (charge/zone taken from bustle stowage).

h. CANNONEER prepares projectile and fuze (sets time on fuze if necessary).

i. COS verifies projectile, fuze, fuze time and propellant and depresses LOAD key on DU (if necessary).

j. When the tube is in the LOAD position, the CANNONEER places the projectile on the ram tray and activates rammer.

k. When the ramming cycle is complete, the CANNONEER places the rammer in the stowed position.

l. GUNNER places propellant in powder chamber and closes breech.

**NOTE**

When the AFCS has laid the gun and the LAY key is highlighted the gun must stay within +/- 0.9 mils of the commanded deflection.

# L-8 AFCS FIRE MISSION - CONTINUED

## L-8.2 Firing Mission - Continued

m. The COS presses and holds the LAY key on the DU until the cannon is laid on the COMMAND FIRING Data.

n. COS ensures that the gun is in the LAY position by verifying and announcing LAY light is highlighted (ACTUAL and COMMANDED DEFLECTION) and QUADRANT are within tolerance (+/- 0.9) and the prompt "WARNING TUBE IS NOT IN LAY POSITION)'" is no longer displayed).

o. GUNNER verifies LAY data. If data is correct GUNNER will announce "Verified". (If data is incorrect GUNNER will announce "Check firing").

p. COS gives the command to "PRIME".

**NOTE**

During high angle missions or illumination missions, it is recommended prime be done at load elevation.

q. COS commands "Hookup", CANNONEER attaches lanyard to firing block and announces "Hookup".

r. COS announces, "FIRE".

**NOTE**

If the Navigation Subsystem or MVS are out, the AFCS will not detect the shot, and COS must press the SHOT soft key after each round.

s. CANNONEER pulls the lanyard to fire the round.

t. The AFCS is capable of automatically detecting Shot. In most cases pressing the SHOT soft key is not required. When a round is fired, the Navigation Subsystem and MVS will detect the round. After the round is fired and detected by the AFCS, the SHOT soft key will automatically disappear for 5 seconds, the Fire Mission will automatically decrement by one round (i.e. rounds to complete mission will decrease by one), and the Ammo Inventory will automatically be adjusted. In the very rare case that the AFCS does not detect shot, the COS must press the SHOT soft key as before.

u. Cannoneer turns on Personnel Fan (Exhaust) switch on the Accessory Control Box and moves the Vent Duct Control Handle into DOWN position. Operate Personnel Fan for 1-2 minutes until all fumes are exhausted.

L-8.2.1 Subsequent Rounds. The first procedure is also used for all subsequent rounds in a fire mission. When all rounds have been fired for the mission, a VERIFY EXPENDED AMMO screen will be displayed. Ammunition accountability is covered in para L-8.3.

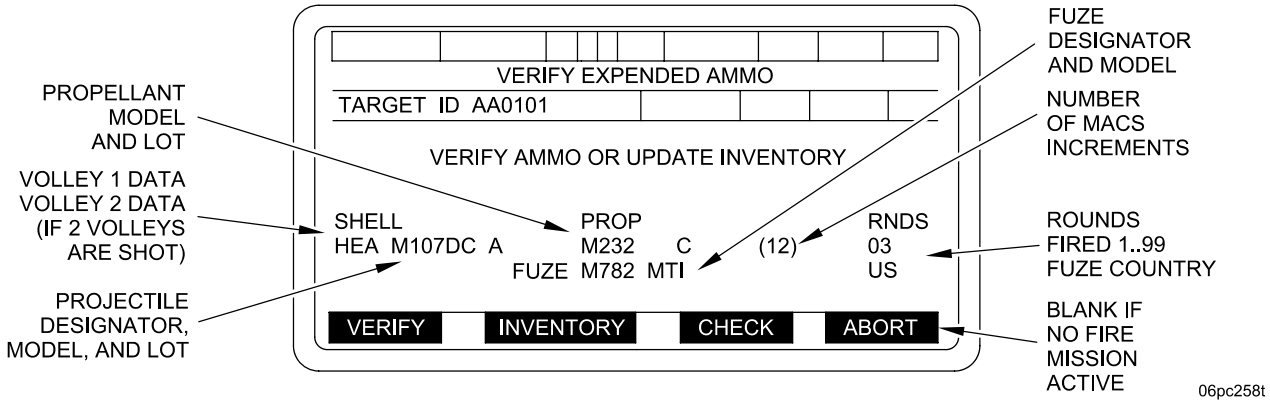

# L-8 AFCS FIRE MISSION - CONTINUED

## L-8.3 Ammunition Accountability.

### NOTE

- If a shell, fuze or propellant is entered in the AFCS inventory, but the quantity is insufficient for the mission, or zero, the AFCS will prompt the Chief of Section to accept or reject the mission (in case a new load of ammunition just arrived and has not been entered into inventory yet).
- If a fire mission is activated while you are in any of the inventory management menus, all completed entries will be saved automatically.

It is essential that accurate ammunition updates to the AFCS be done in order to be able to fire all missions received. This should be done after a mission is fired. When all rounds in a mission have been fired, a VERIFY EXPENDED AMMO screen is displayed. This screen asks the operator either to verify ammunition fired or to update the ammo inventory. This is accomplished as follows:

a. If the ammunition shown in the lower part of the VERIFY EXPENDED AMMO screen is an accurate account of the ammunition fired, press VERIFY key, to update the ammunition count. This updates the AFCS ammunition count automatically.

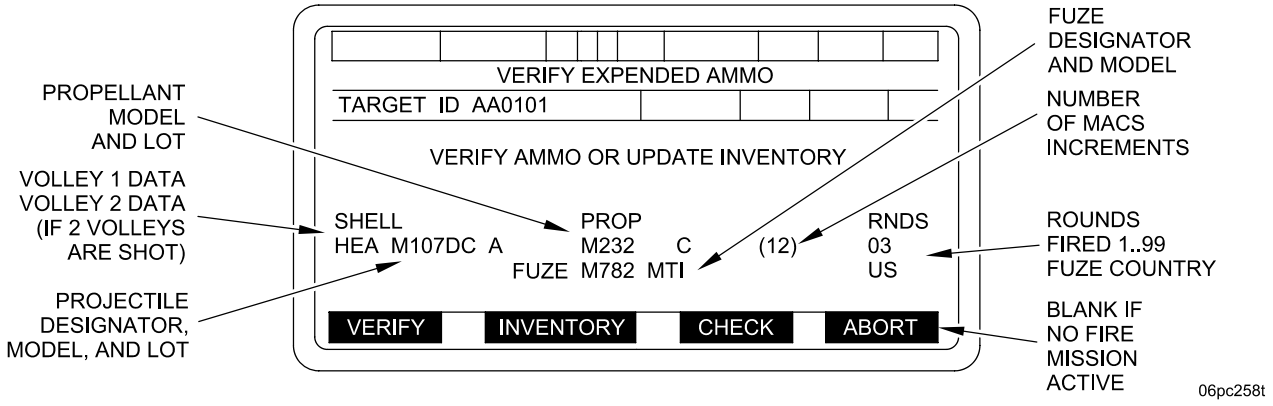

# L-8 AFCS FIRE MISSION - CONTINUED

## L-8.3 Ammunition Accountability - Continued

b. If the ammunition shown on the VERIFY EXPENDED AMMO screen is not an accurate account of ammunition fired (for example, a compatible fuze was used as a substitute for the fuze specified in the mission), press the INVENTORY key. This causes an INVENTORY MANAGEMENT screen to be displayed.

**NOTE**

When INVENTORY key is pressed, SHELL, PROP and FUZE must be updated.

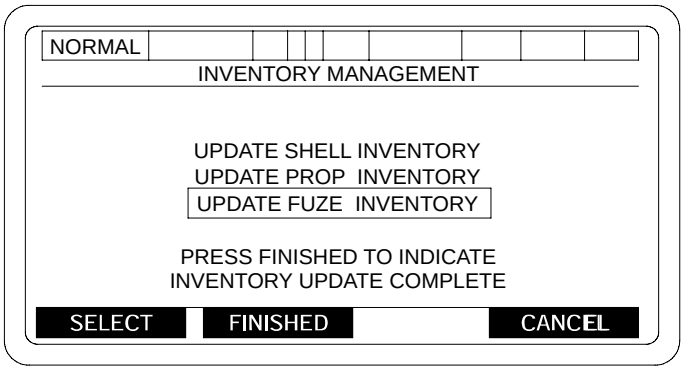


06pc172m

c. This will allow the operator to manually input the type of round actually fired and correct the ammo inventory.

d. If FINISHED is pressed at this point, the operator will be returned to a ROUND COMPLETE screen and none of the ammo from that fire mission will be subtracted from the inventory.

# L-8 AFCS FIRE MISSION - CONTINUED

## L-8.4 End of Mission.

Notification that a Fire Mission has ended is sent by an END OF MISSION (EOM) message from the POC. Normally, this is done when all rounds requested in a Fire Mission have been fired. When all the rounds for a mission have been fired, a ROUNDS COMPLETE OR MISSION PAUSED, AWAITING EOM OR CONTINUATION OF MISSION screen will be displayed until an EOM message is sent from the POC. When the EOM message is received by the AFCS, an END OF MISSION screen is displayed.

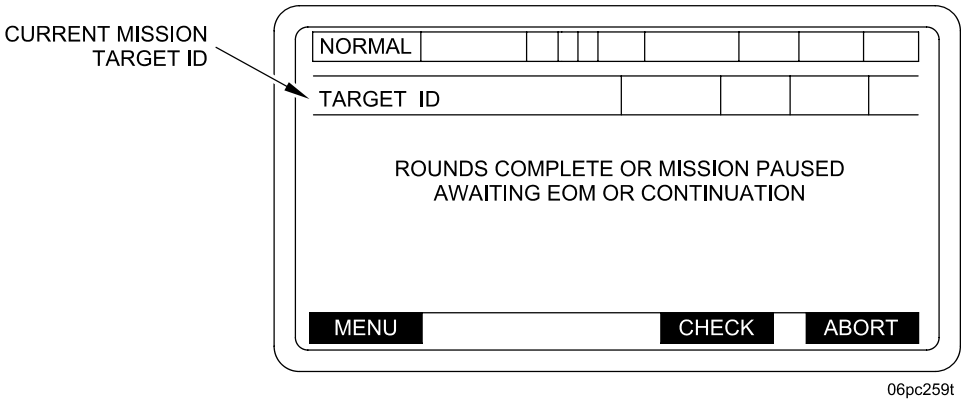


**CAUTION**

Operate Personnel Fan (Exhaust) switch on the Accessory Control Box with the Vent Duct Control Handle in DOWN position for 2 minutes when crew members observe fumes, smoke or indication of carbon monoxide build up in the crew compartment.

**NOTE**

While awaiting EOM or continuation of a mission, you can access the SETUP AND INFORMATION menus by pressing the MENU key (e.g. to update inventory to add new ammo received). The AFCS will automatically interrupt whatever you are doing if the fire mission is continued.

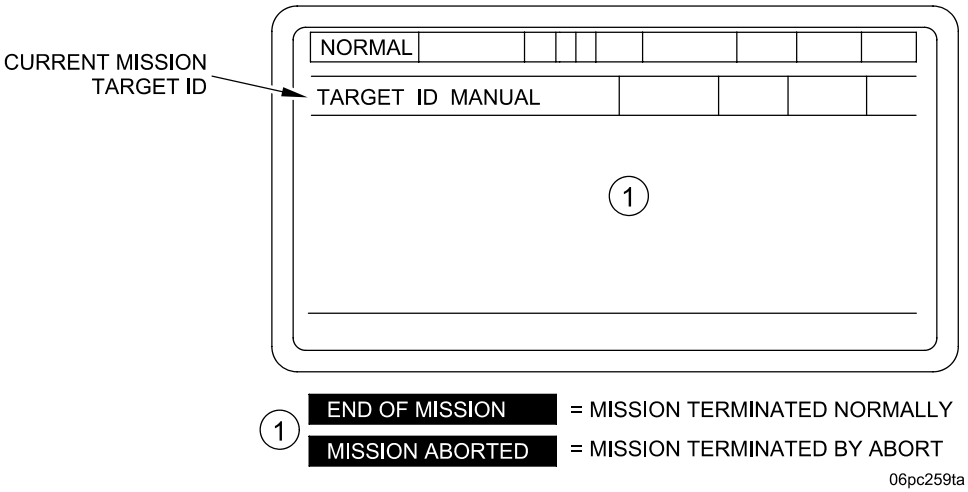

# L-8 AFCS FIRE MISSION - CONTINUED

## L-8.5 AFCS Emergency Mission.

Because the M109A6 makes frequent tactical and survivability moves, receiving a Fire Mission while moving will become a routine event. During a move, a Fire Mission order may be sent requiring the individual howitzer to stop, emplace, and fire on a target at any time. When this type of order is sent, an audible alert and a visible alert in the form “FIREMSN RECEIVED”, “ACK” in field 16 is displayed to the operator.

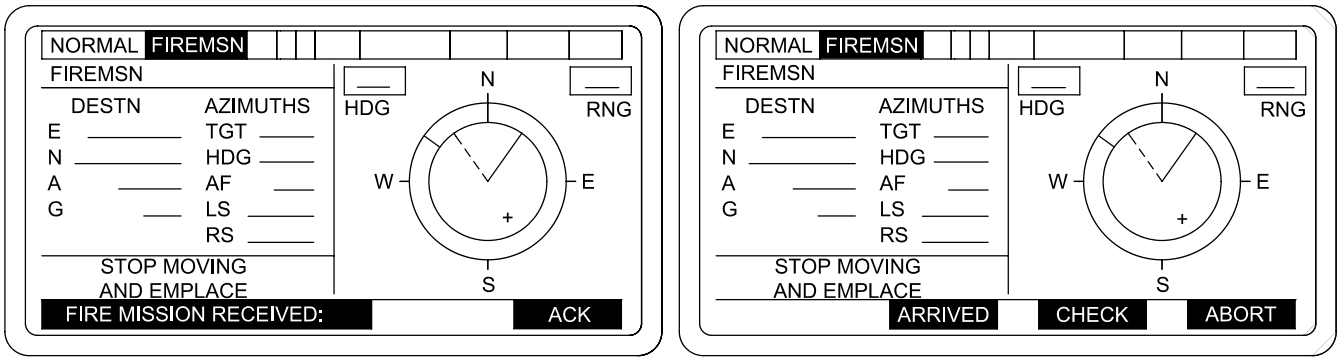


06pc274t

L-8.5.1 Emplace.

The chief of section must ACK the mission and select a suitable firing position as quickly as possible. Depress ARRIVED soft key to receive the Fire Mission. Fire Mission data will be computed and displayed.

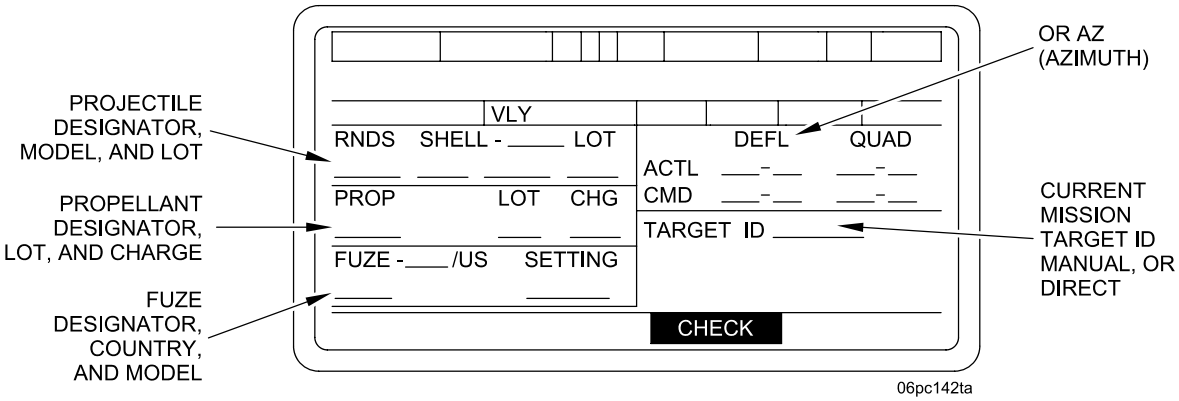


06pc142ta

# L-8 AFCS FIRE MISSION - CONTINUED

## L-8.5 AFCS Emergency Mission - Continued

L-8.5.2 Ready Gun.

a. Set HYDRAULIC POWER switch on hydraulic control box and GUN SERVO switch on DU to ON.

b. Release gun tube from travel lock.

c. Release cab traverse lock.

L-8.5.3 LAY, LOAD, LAY, AND FIRE.

**NOTE**

Ballistic computations must have been completed before LAY key is depressed.

a. Depress and hold LAY key to bring gun to target Azimuth and LAY elevation. Look thru tube and verify immediate Crest is clear.

b. Depress LOAD key to LAY weapon on COMMANDED deflection and LOAD quadrant.

c. Depress LAY key to LAY weapon on COMMANDED deflection and quadrant. Ensure LAY key is held until LAY indicator is highlighted.

d. On command, fire the gun.

L-8.5.4 End of Mission.

a. When END OF MISSION message is received, wait for instructions to proceed with displacement.

b. After the END OF MISSION message, the MOVE ORDER screen with previous move mission data will be displayed.

c. Turn on Personnel Fan (Exhaust) switch on the Accessory Control Box and move the Vent Duct Control Handle into DOWN position. Operate Personnel Fan for 1-2 minutes until all fumes are exhausted.

d. Proceed to ordered destination.

**CAUTION**

Operate Personnel Fan (Exhaust) switch on the Accessory Control Box with the Vent Duct Control Handle in DOWN position for 2 minutes when crew members observe fumes, smoke or indication of carbon monoxide build up in the crew compartment.

# L-8 AFCS FIRE MISSION - CONTINUED

## L-8.6 Direct Fire Procedures Using AFCS.

**NOTE**

While the AFCS can be used, manual (one man-one sight) procedures have been found to be faster and just as accurate.

For direct fire against close range targets, AFCS can be used to aid in laying the cannon. COS identifies target, states type charge, projectile and fuze to be used, estimates speed (if target is moving) and announces lead to GUNNER. COS continues direct firing procedures until target is destroyed.

a. COS first identifies direct fire target. If target consists of several weapons, he selects target that is the greatest threat to his position.

b. COS gives fire command in the following order:

| ELEMENT | EXAMPLE |
|---|---|
| Target designation | Target, lead tank |
| Target direction | Left/right front |
| Projectile, charge, fuze | Shell HE, charge 7, fuze quick |
| Lead | Lead left/right 10 |
| Method of fire | Fire at will |

**NOTE**

- Fire at will means to keep firing until target is destroyed or another command is given.
- COS will estimate range if he has no accurate range.
- COS will use lead chart mounted in commander's cupola (shown below) for initial lead.

**DIRECT FIRE MOVING TARGET LEAD**

| TARGET SPEED (MPH) | TARGET DIRECTION OF TRAVEL LEAD IN MILS (m) | | |
|---|---|---|---|
| | ↔ | ⤫ | ↕ |
| 5 | 5m | 5m | 0m |
| 10 | 10m | 5m | 0m |
| 15 | 15m | 10m | 0m |
| 20 | 20m | 15m | 0m |
| 25 | 20m | 15m | 0m |
| 30 | 30m | 20m | 0m |

c. On Display Unit COS sets GUN SERVO switch to OFF.

# L-8 AFCS FIRE MISSION - CONTINUED

## L-8.6 Direct Fire Procedures Using AFCS - Continued

d. On hydraulic control box (1), turn HYDRAULIC POWER switch (2) to ON, TRAVERSE MODE switch (3) to POWER, TRAVERSE CONTROL switch (4) to GUNNER, and ELEVATE CONTROL switch (5) to COS.

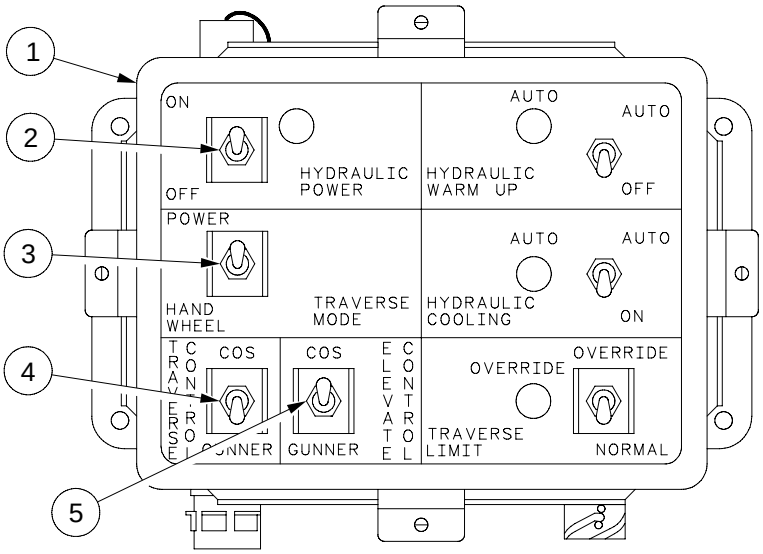


hipc173a

e. Bring up SETUP AND INFORMATION menu on Display Unit.

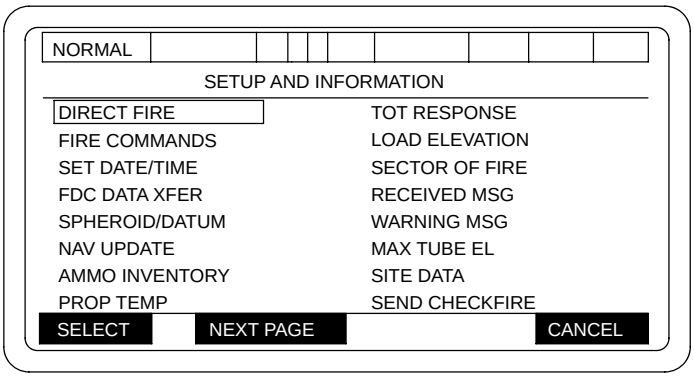


06pc260t

**NOTE**

The NAV update selection shall be available to the AFCS operator at all times except when a fire mission is active or the navigation subsystem is unavailable.

# L-8 AFCS FIRE MISSION - CONTINUED

## L-8.6 Direct Fire Procedures Using AFCS - Continued

f. With cursor (box) at DIRECT FIRE, press soft key located directly beneath SELECT prompt to display a DIRECT FIRE MODE ENTRY menu on DU.

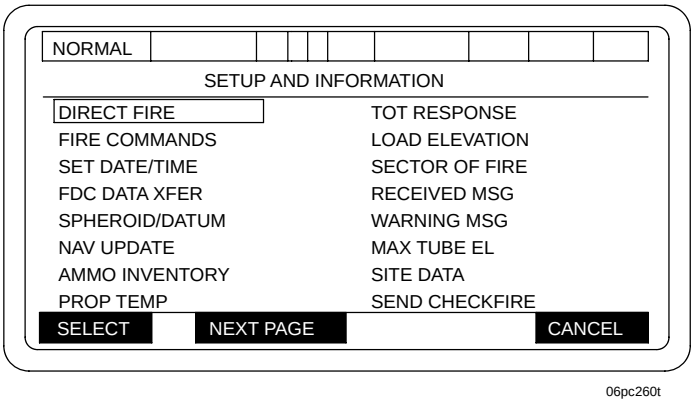


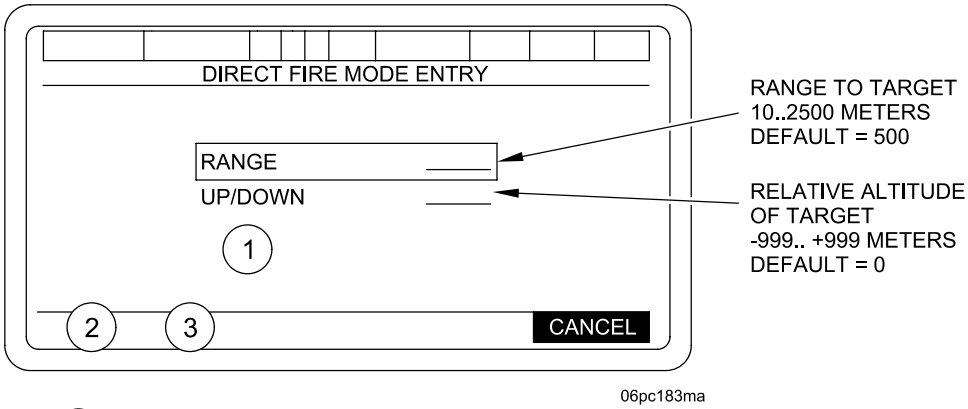


(1) blank - No selection made
"TYPE VALUE 10 TO 2500 METERS" - RANGE Selected.
"-PRESS ENT KEY-"
"TYPE VALUE -999 TO +999" - UP/DOWN Selected.
"-PRESS ENT KEY-"

(2) blank - If RANGE or UP/DOWN Selected

SELECT -Awaiting Selection or USE ALL. Selects current menu item.

(3) blank - If RANGE Selected

+/- - UP/DOWN Selected. Change sign of value

USE ALL - Awaiting Selection or USE ALL. Initiate direct fire mission.

# L-8 AFCS FIRE MISSION - CONTINUED

## L-8.6 Direct Fire Procedures Using AFCS - Continued

g. Press soft key located directly beneath the USE ALL prompt of the DIRECT FIRE MODE ENTRY menu to display a FIRE MISSION menu.

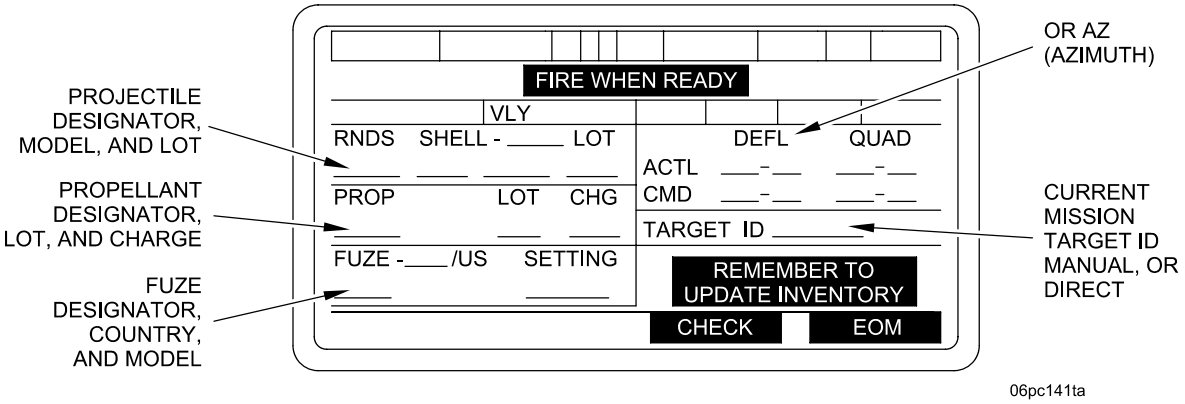


**NOTE**

You will only use the ACTL QUAD field of this screen to set tube elevation.

h. Using the DIRECT FIRE RANGE PLATE, the COS determines elevation based on estimated range. Using COS control handle, COS elevates/depresses gun to proper elevation in the ACTL QUAD field of the FIRE MISSION menu, then announces "SET" continually until howitzer is fired.

**DIRECT FIRE RANGE PLATE**
**155MM HOWITZER**

| M549A1 RAP | | M107 HE PROJECTILE | |
|---|---|---|---|
| ROCKET OFF | | M19A1 PC WB | |
| M203 SERIES PC RB | | M119A2 PC RB | |
| RANGE METERS | ELEV MILS | RANGE METERS | ELEV MILS |
| 400 | 3 | 400 | 4 |
| 600 | 5 | 600 | 7 |
| 800 | 6 | 800 | 9 |
| 1000 | 8 | 1000 | 11 |
| 1200 | 9 | 1200 | 14 |
| 1400 | 11 | 1400 | 16 |
| L15 HE PROJECTILE | | M107 HE PROJECTILE | |
| M203 SERIES PC RB | | M4A2 PC WB | |
| RANGE METERS | ELEV MILS | RANGE METERS | ELEV MILS |
| 400 | | 400 | 6 |
| 600 | | 600 | 10 |
| 800 | | 800 | 13 |
| 1000 | | 1000 | 16 |
| 1200 | | 1200 | 20 |
| 1400 | | 1400 | 23 |
| PLATE DIRECT FIRE | | P/N 12910859 | |

# L-8 AFCS FIRE MISSION - CONTINUED

## L-8.6 Direct Fire Procedures Using AFCS - Continued

i. On subsequent rounds, the COS will estimate a new range based on observed effects and repeat step h until target is destroyed or other commands become necessary.

j. GUNNER sets azimuth counter (6) to 3200, and turns direct/indirect fire bar knob (7) to DIRECT position to engage 5.0 mils per click sight mechanism.

**NOTE**

The head of the PANTEL must remain oriented with the gun tube. The PANTEL will be oriented with the gun tube if the azimuth counter reads 3200 and the PANTEL is properly boresighted.

k. If central laying is used, GUNNER applies announced lead to azimuth counter (6). If lead is left, add the lead angle to 3200; if lead is right, subtract the lead angle from 3200. The GUNNER then sights through the eyepiece (8) and traverses tube until vertical hairline (9) of PANTEL centers on the target. If reticle method is used, GUNNER places vertical hairline (10) left or right of target the number of mils lead announced by COS.

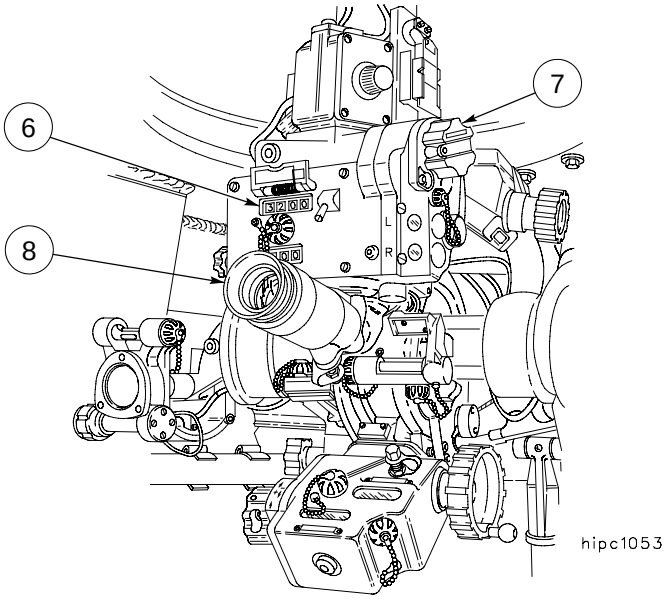


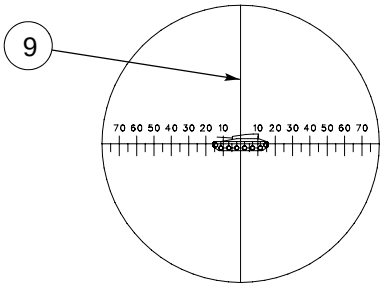


CENTRAL LAYING

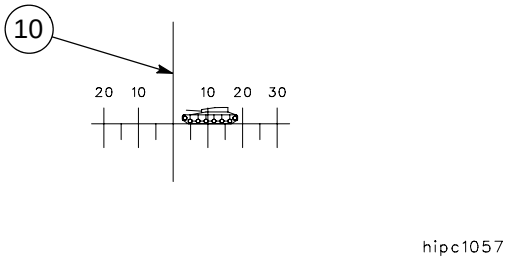


RETICLE METHOD

# L-8 AFCS FIRE MISSION - CONTINUED

## L-8.6 Direct Fire Procedures Using AFCS - Continued

l. When GUNNER establishes correct sight picture, and COS has announced “SET,” GUNNER commands “FIRE.”

m. CANNONEER fires gun.

n. After firing, GUNNER continues to lay on target until it is destroyed or a subsequent fire command is issued.

o. COS gives subsequent fire commands based on observed effects and changes lead as necessary.

| ELEMENT | EXAMPLE |
|---|---|
| Change in Lead | Right/left 5 |

p. GUNNER turns azimuth deflection knob in 5-mil (1-click) increments to set lead change.

## L-8.7 System Menus.

The SETUP AND INFORMATION menu is used to access the various screens to initialize the AFCS and align the Navigation System. It also provides access to menus allowing the operator to enter fire commands and muzzle velocities, access messages, and to monitor AFCS STATUS and tube temperature. The operator can change the display format and intensity, input Manual Move Orders, perform a system update, and access stored targets. The operator can enter a SPHEROID/DATUM; can access the MAINTENANCE MODE MENU; and can update his ammunition inventory. This will complete the capabilities of the system menus.

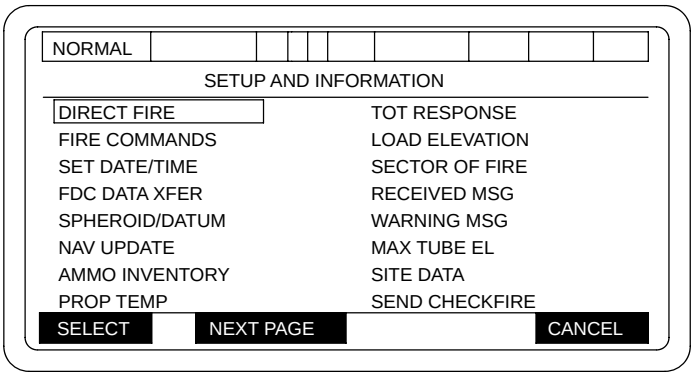


06pc260t

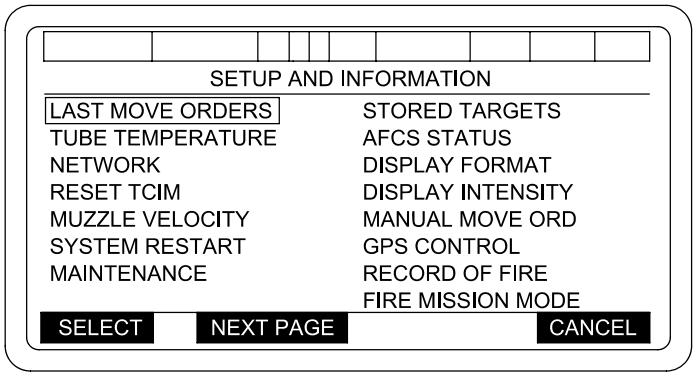


06pc261t

# L-8 AFCS FIRE MISSION - CONTINUED

## L-8.7 System Menus - Continued

L-8.7.1 Fire Commands. If the Ballistic Computer or digital communications is out, fire commands (deflection and quadrant) will be sent by voice to the howitzer COS. The operator will enter these fire commands manually as follows:

a. Box in FIRE COMMANDS on SETUP AND INFORMATION menu and press SELECT key to display a FIRE COMMANDS ENTRY screen.

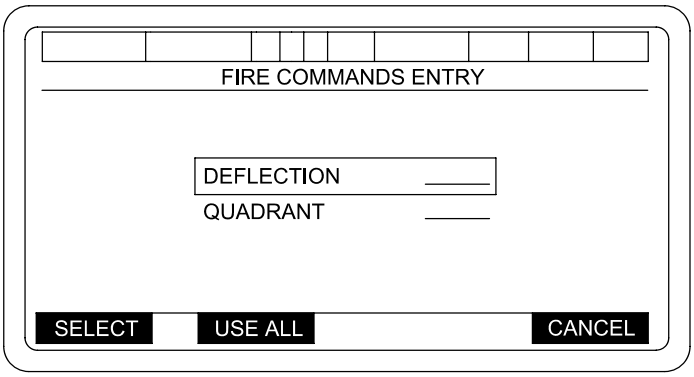


06pc204tb

b. With the FIRE COMMANDS ENTRY screen displayed, box in DEFLECTION; press SELECT key; type in deflection; and press ENT key.

c. Box in QUADRANT and press SELECT key. Type in quadrant and press ENT key.

d. When correct fire command has been entered, press USE ALL key to display a FIRE MISSION screen with firing data in the COMMANDED (CMD) field.

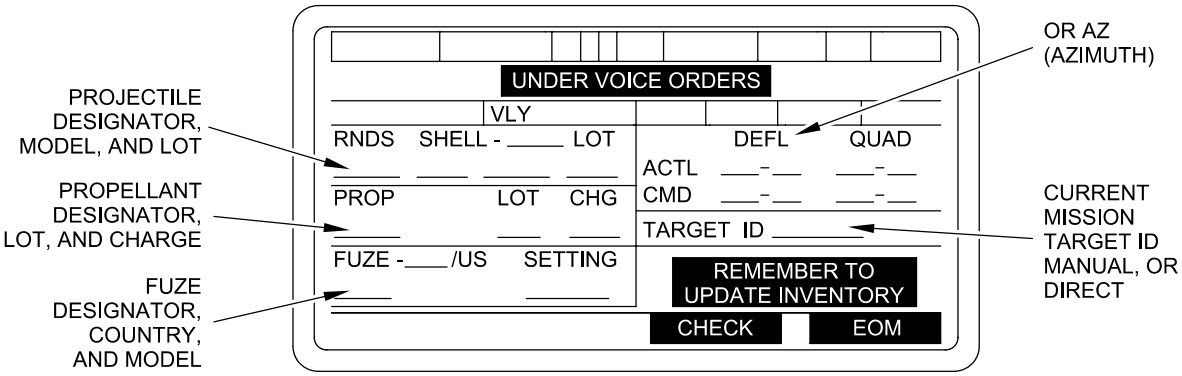


06pc144ta

e. The fire mission is fired using normal procedures.

f. When the voice order to end the mission is received, press the EOM key.

g. Ammo accountability is then manually processed (para L-8.3).

# L-8 AFCS FIRE MISSION - CONTINUED

## L-8.7 System Menus - Continued

L-8.7.2 Messages. The two types of AFCS messages accessed from the SETUP AND INFORMATION menu are RECEIVED MSG and WARNING MSG. The received messages are ones received from the POC and the warning messages are generated by the AFCS for system status. When there is a new message to read, a RCVD MSG (R) highlighted field 5 or WARN MSG (W) highlighted field 4 indicator will be displayed at the top of the screen. Access messages using the following procedures:

a. Box in desired message on SETUP AND INFORMATION menu and press SELECT key to display a RECEIVED MESSAGE/SYSTEM WARNING MESSAGE.

b. If more than one message is in the message queue, display next message by pressing the NEXT MSG key. If a message contains more than one page, display next page by pressing NEXT PAGE key.

c. To return to the SETUP AND INFORMATION menu, press CANCEL key.

**NOTE**

- The AFCS shall keep three (3) messages in a buffer. If there are more than three unviewed messages, the AFCS shall discard the oldest and display the error message “MESSAGES HAVE BEEN LOST” “ACK” to the operator upon entry into the screen.
- The RECEIVED MESSAGE counter has a range from 0001 to 9999 and will rest on each powerup.

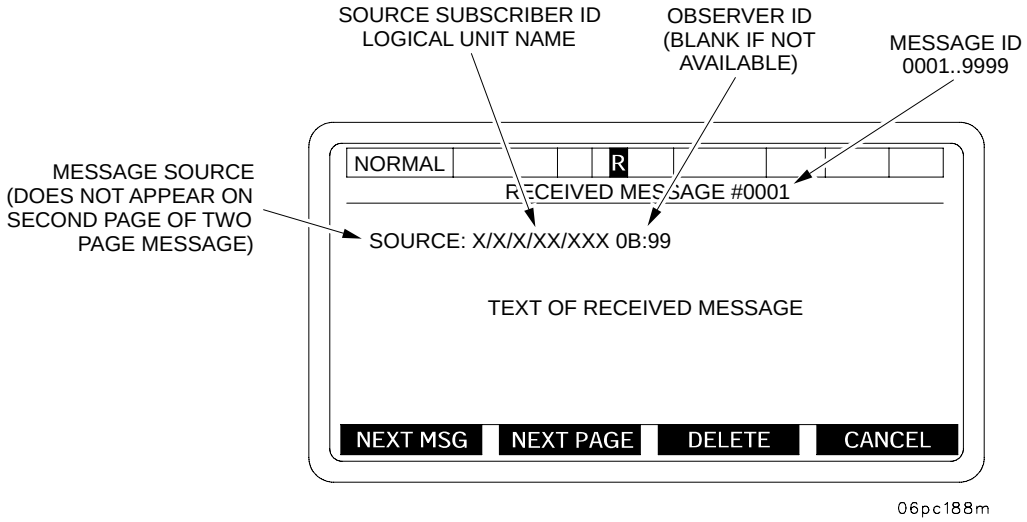


NEXT MSG = DISPLAY NEXT MESSAGE (IF THERE ARE NO ADDITIONAL MESSAGES, THEN THE SCREEN DISPLAYS: “NO MORE MESSAGES”

NEXT PAGE = DISPLAY NEXT PAGE (BLANKED IF NO NEXT PAGE)

DELETE = DELETE CURRENT MESSAGE (IF THERE ARE NO MORE MESSAGES, THEN “NO MORE MESSAGES” SHALL BE DISPLAYED

# L-8 AFCS FIRE MISSION - CONTINUED

## L-8.7 System Menus - Continued

L-8.7.2 Messages - Continued

**NOTE**

The SYSTEM WARNING MESSAGE counter has a range from 0001 to 9999 and will reset on each powerup.

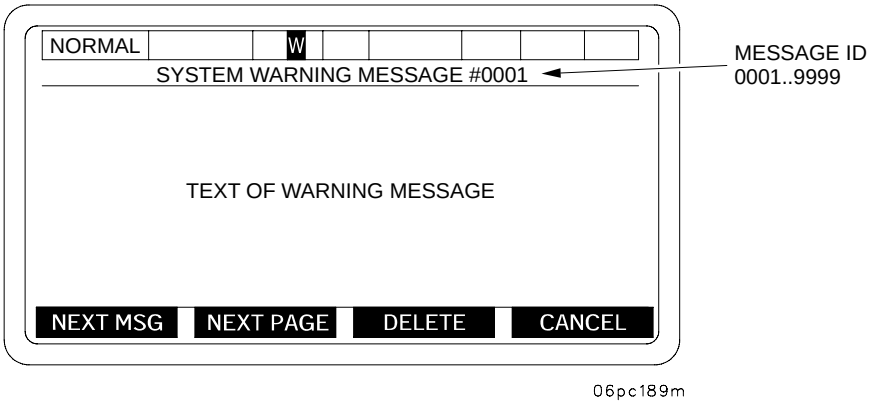


NEXT MSG = DISPLAY NEXT MESSAGE (IF THERE ARE NO ADDITIONAL MESSAGES, THEN THE SCREEN DISPLAYS: "NO MORE MESSAGES"

NEXT PAGE = DISPLAY NEXT PAGE (BLANKED IF NO NEXT PAGE)

DELETE = DELETE CURRENT MESSAGE (IF THERE ARE NO MORE MESSAGES, THEN "NO MORE MESSAGES" SHALL BE DISPLAYED

L-8.7.3 Maximum Tube Elevation. From the SET UP AND INFORMATION menu select "MAX TUBE EL" to input the maximum tube elevation.

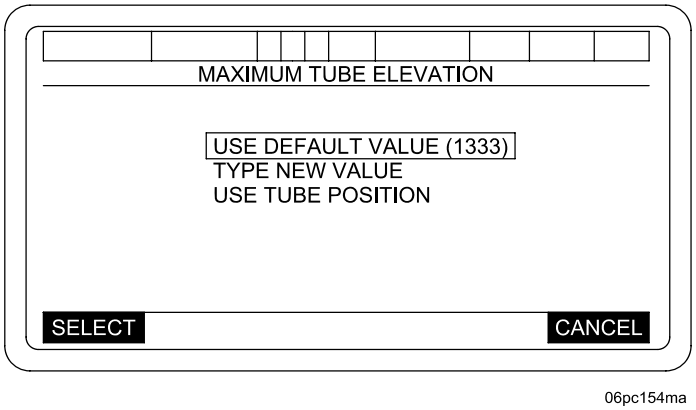


a. Entering MAXIMUM TUBE ELEVATION. If a maximum tube elevation is not entered, the default value as shown on the display will be entered automatically. If an elevation other than the default value is desired, the entry can be made by either of two methods:

# L-8 AFCS FIRE MISSION - CONTINUED

## L-8.7 System Menus - Continued

L-8.7.3 Maximum Tube Elevation - Continued

**NOTE**

Numerical value must be entered before sign.
Default sign is (+).

(1) Box in TYPE NEW VALUE and depress SELECT to bring up a new MAXIMUM TUBE ELEVATION display. Enter required value for MAX TUBE EL and press ENT key.

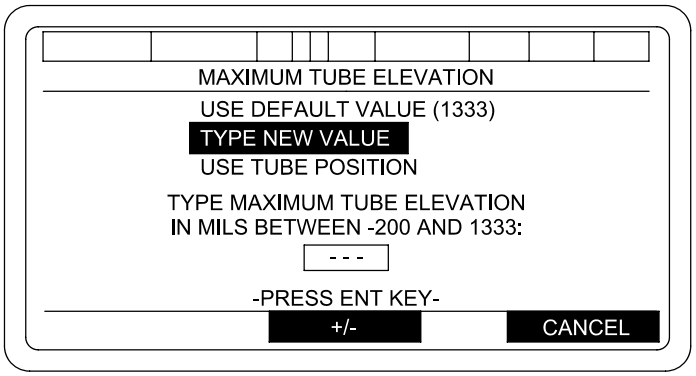


06pc655m

(2) Box in USE TUBE POSITION and press SELECT key to bring up a new MAXIMUM TUBE ELEVATION display. Using the COS or gunner's control handle, move tube to desired elevation and press ENT key.

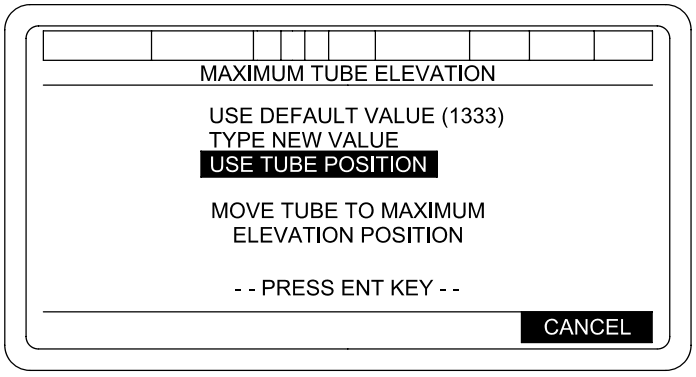


06pc156ma

# L-8 AFCS FIRE MISSION - CONTINUED

## L-8.7 System Menus - Continued

L-8.7.4 Send Checkfire. Selecting SEND CHECKFIRE will result in questions asked, “ARE YOU SURE”, “YES” “NO”. “YES” selection will cause all howitzer systems to be placed on CHECKFIRE. Only the POC/FDC can cancel the CHECKFIRE. “NO” selection = No action.

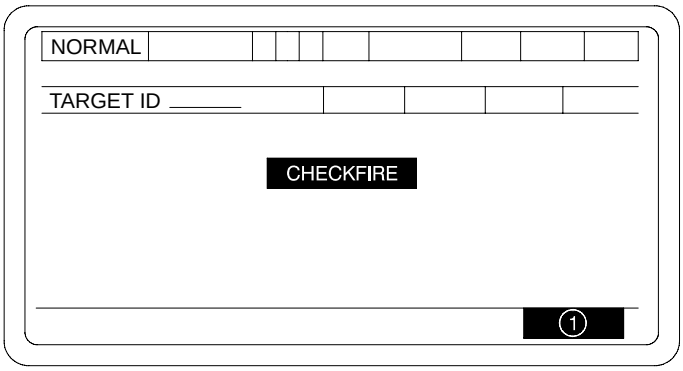


1 EOM - MISSION is direct or manual

ABORT - MISSION is not direct or manual

06pc145t

L-8.7.5 Stored Targets. The AFCS can store up to ten targets. These targets can be reviewed for information concerning target number, rounds to be fired, shell, propellant, fuze, and method of control. To access the target summary, perform the following steps:

a. Box in STORED TARGETS on SETUP AND INFORMATION menu and press SELECT key to display a STORED TARGET SUMMARY screen.

b. If there is more than one page, press NEXT PAGE key to display next page.

c. To return to SETUP AND INFORMATION menu, press CANCEL key.

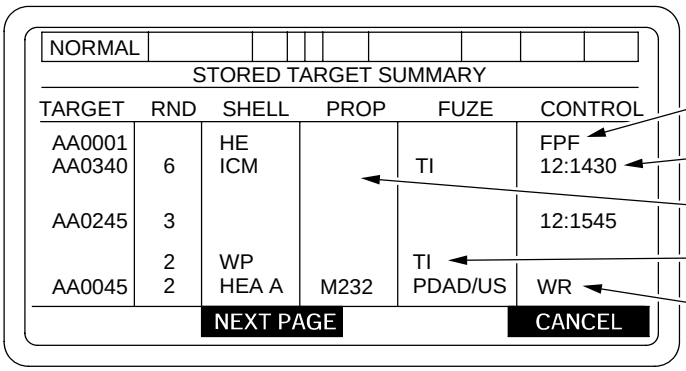


FPF ALWAYS FIRST ENTRY (IF AVAILABLE)

TOT MISSIONS NEXT SORTED BY TOT TIME

FIELDS BLANK WHEN TGT AMMO IS UNSPECIFIED

SECOND VOLLEY

OTHER MISSIONS SORTED BY TARGET ID

06pc145ta

NEXT PAGE = SHOWS NEXT PAGE. IF LAST PAGE, THEN SHOWS FIRST PAGE. (BLANKED IF ONLY ONE PAGE OR NO TARGETS).

### NOTE

- Shell and fuze entries will be blank if the stored mission arrives from the FDC with unspecified ammunition and is not an FPF mission (as shown above in target ID AA0245).
- Targets with RND (rounds) over 99 are displayed with **.

# L-8 AFCS FIRE MISSION - CONTINUED

## L-8.7 System Menus - Continued

L-8.7.6 AFCS Status. To display the AFCS SUBSYSTEM STATUS, proceed as follows:

a. Box in AFCS STATUS on SETUP AND INFORMATION menu and press SELECT to display the AFCS STATUS screen.

b. Cursor and select an AFCS SUBSYSTEM to view the sub-components. The status of each sub-component will be displayed either “OK” or “FAIL”.

c. To return to the SETUP AND INFORMATION menu, press CANCEL key.

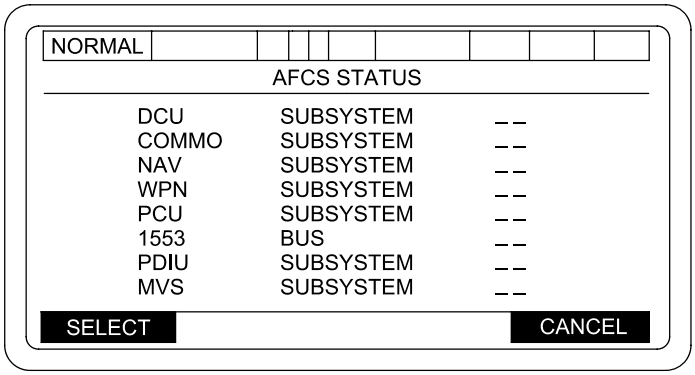


06pc075ma

L-8.7.7 Last Move Orders. To display the last move orders received by the AFCS, proceed as follows:

a. Box in LAST MOVE ORDERS on SETUP AND INFORMATION menu and press SELECT key. A STEERTO FIRE AREA screen will be displayed showing LAST MOVE ORDERS.

b. Press the EMPLACE key to display an EMPLACE FIRE AREA screen showing LAST MOVE ORDERS.

c. From STEERTO FIRE AREA or EMPLACE FIRE AREA screen, the SETUP AND INFORMATION menu can be reached by pressing the CANCEL key.

**NOTE**

This will not be available after the first Survivability Move.

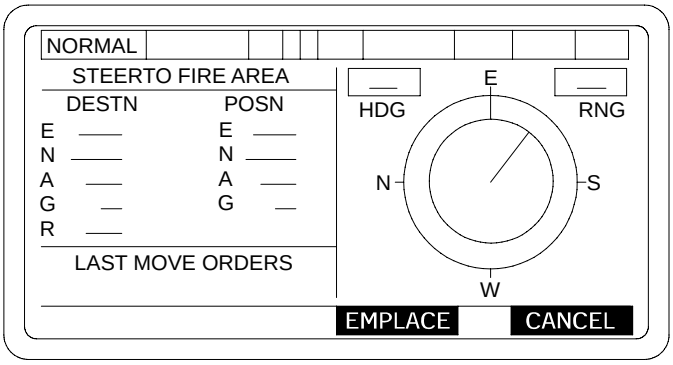


06pc191m

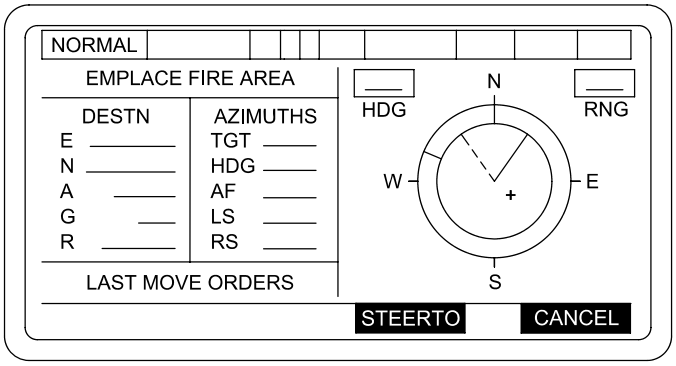


06pc192ma

# L-8 AFCS FIRE MISSION - CONTINUED

## L-8.7 System Menus - Continued

L-8.7.8 Tube Temperature. The TUBE TEMPERATURE STATUS is shown on the FIRE MISSION screen as COLD, WARM, or HOT; and a time is displayed which indicates how long a complete round may remain in the tube. TUBE TEMPERATURE STATUS can also be displayed as follows:

a. Box in TUBE TEMPERATURE on SETUP AND INFORMATION menu and press SELECT key.

b. A TUBE TEMPERATURE screen will be displayed showing TEMPERATURE STATUS (COLD, WARM, HOT), and SAFE TIME IN TUBE.

c. To return to SETUP AND INFORMATION menu, press CANCEL key.

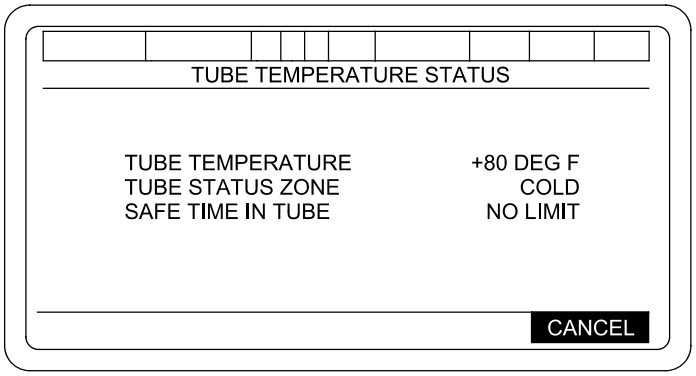


06pc193ma

L-8.7.9 System Restart. To do a SYSTEM RESTART without shutting the system off and powering back-up, proceed as follows:

a. Box in SYSTEM RESTART on SETUP AND INFORMATION menu and press SELECT key. A prompt will be displayed, “ARE YOU SURE”, “YES” or “NO”.

b. The system will restart at a POWER UP STATUS.

c. “INITIALIZATION” must be performed.

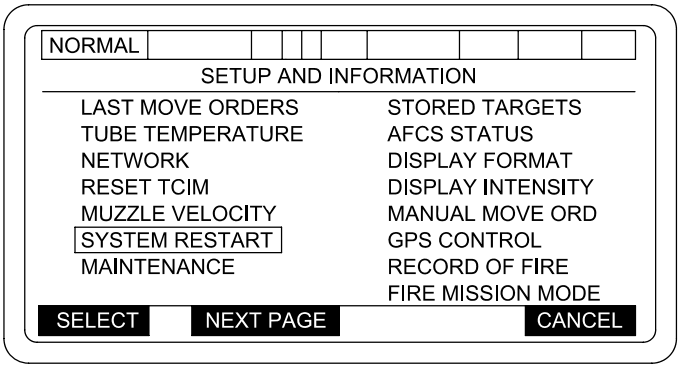


06pc261tc

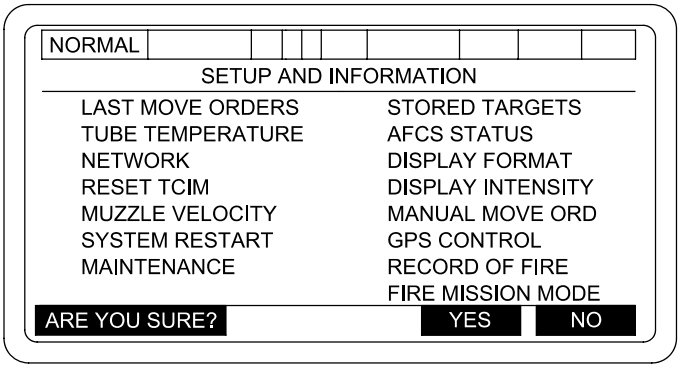


06pc261td

# L-8 AFCS FIRE MISSION - CONTINUED

## L-8.7 System Menus - Continued

L-8.7.10 Display Format. This function is used to change the display of the tube position from AZIMUTH to DEFLECTION, and vice versa; or the TEMPERATURE STATUS display from Fahrenheit to Celsius, and vice versa. This display format is changed as follows:

a. Box in DISPLAY FORMAT on SETUP AND INFORMATION menu and press SELECT key to display a DISPLAY FORMAT screen.

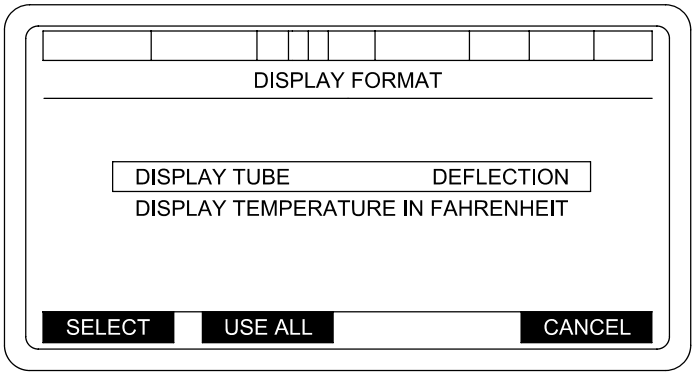


06pc196ma

b. To change deflection, box in DISPLAY TUBE DEFLECTION and press SELECT to display another DISPLAY FORMAT screen.

c. This screen asks the question: CHANGE TO AZIMUTH/DEFLECTION? Press the appropriate soft key, YES or NO. This will return the display to the original DISPLAY FORMAT screen.

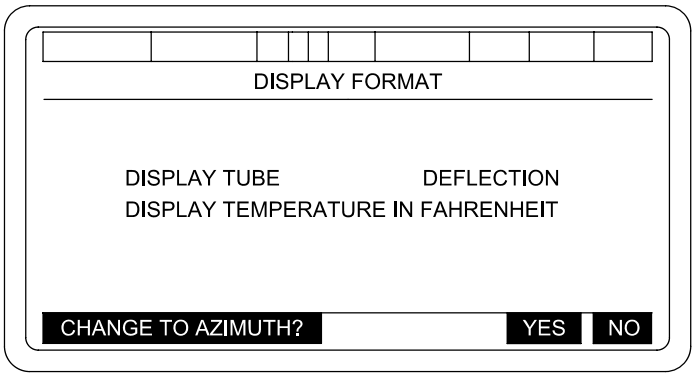


06pc197ma

# L-8 AFCS FIRE MISSION - CONTINUED

## L-8.7 System Menus - Continued

L-8.7.10 Display Format - Continued

d. To change the temperature display, box in DISPLAY TEMPERATURE IN FAHRENHEIT and press SELECT key to display another DISPLAY FORMAT screen.

e. Answer screen question CHANGE TO CELSIUS/FAHRENHEIT? by pressing appropriate soft key.

f. When original DISPLAY FORMAT screen is displayed, press USE ALL key to return to SETUP AND INFORMATION menu.

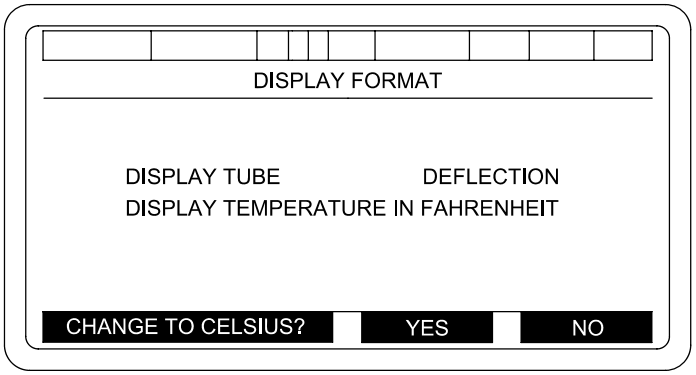


06pc198m

L-8.7.11 Display Intensity. The display intensity of the EL Panel can be changed to four different intensity levels as follows:

a. Box in DISPLAY INTENSITY on SETUP AND INFORMATION menu and press SELECT key to display a SELECT DISPLAY INTENSITY screen.

b. On the SELECT DISPLAY INTENSITY screen, box in desired intensity and press SELECT key. Display will change to the selection made.

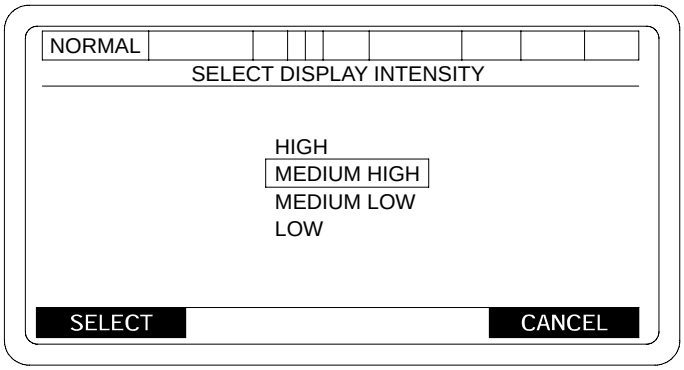


06pc199m

# L-8 AFCS FIRE MISSION - CONTINUED

## L-8.7 System Menus - Continued

L-8.7.12 Manual Move Order. When it is necessary to move the howitzer without a move order from the POC enter the movement data as follows:

a. Box in MANUAL MOVE ORDER on SETUP AND INFORMATION menu and depress SELECT key to display a MANUAL MOVE ORDER ENTRY screen.

b. Enter data by boxing in each data field and then typing in desired data. As each field is filled, press ENT key to enter data.

c. When all data has been entered, press USE ALL key. This will cause the SETUP AND INFORMATION screen to be displayed with MOVE ORD at the top. Press CANCEL key to display the MOVE ORDER screen (STEERTO or EMPLACE).

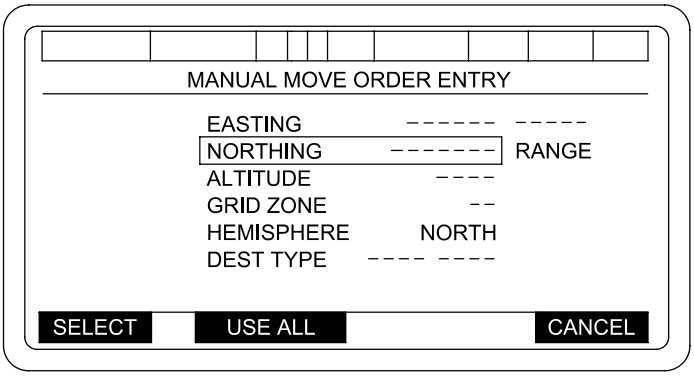


06pc262t

### NOTE

- If the Move Order coordinates are outside the MapMod, no AFCS warning message will be issued. All Move Order coordinates should be checked with a map spot, or through some other secondary means to insure they are within the current MapMod.

- If the Move Order coordinates are in an adjacent Grid Zone, the AFCS will automatically convert these coordinates to the MapMod Grid Zone. Once the STEER TO screen is displayed, the entered coordinates will be converted to the MapMod Grid Zone. If a map spot is performed, the MapMod Grid Zone will need to be extended into the adjacent Grid Zone.

- If Destination Type is to a FIRING POINT, Operator must input SECTOR OF FIRE prior to inputting a Manual Move Order.

# L-8 AFCS FIRE MISSION - CONTINUED

## L-8.7 System Menus - Continued

L-8.7.12 Manual Move Order - Continued

- Destination Types are: LOG POINT (for resupply), INIT POINT (for survey control point) and FIRE POINT.
- If DO NOT MOVE was on the screen before you start this move, the AFCS will notify FDC that the howitzer is moving.
- RANGE shows the distance to the entered point from the current location based on easting and northing. It is not operator selectable. Move order distance will only be displayed up to 99,999 meters. If the value is 100,000 to 350,000 meters, "*****" will be displayed. If the value is more than 350,000 meters, you will receive an error message, "DISTANCE EXCEEDS 350 KM" "ACK".
- If the position entered is above 84 degrees north or below 80 degrees south, the entry will be rejected and you will receive an error message, "POSITION IS NOT VALID" "ACK".

# L-8 AFCS FIRE MISSION - CONTINUED

## L-8.7 System Menus - Continued

L-8.7.13 GPS Control. Used to enhance positioning. The POC will instruct you when to use GPS Control.

**NOTE**

Use according to unit SOP.

a. Select either USE GPS AIDING or USE ONLY CODED GPS DATA.

b. You will receive the following operator prompts.

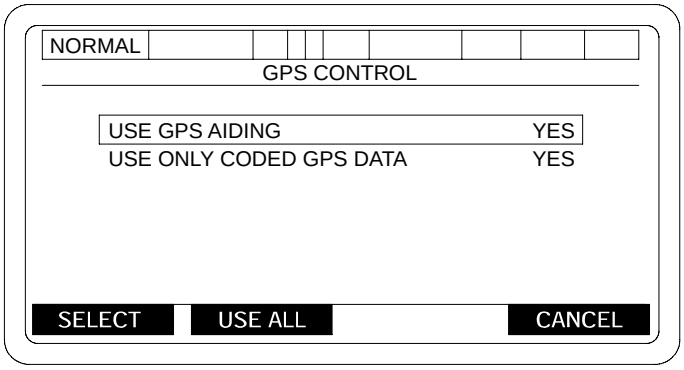


06pc201m

OPERATOR PROMPTS (ON SOFTKEY LINE):

1. WHEN GPS AIDING SELECTED:

USE GPS AIDING? | YES | NO

2. WHEN USE ONLY CODED GPS DATA SELECTED:

USE ONLY CODED GPS? | YES | NO

NOTE: VALUES SHOWN ARE SYSTEM SUPPLIED DEFAULTS.

L-8.7.14 Record of Fire.

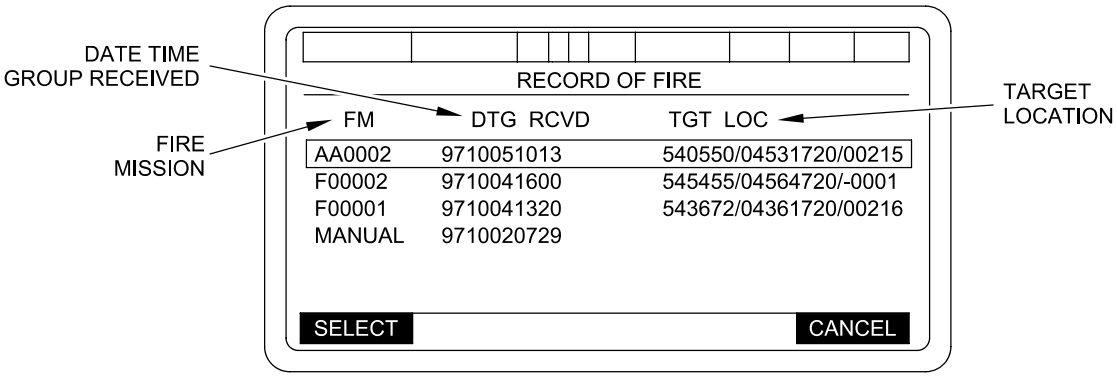


06pc263t

SELECT : View firing data from a particular mission.

CANCEL : Returns to SETUP AND INFORMATION menu.

Mission data displayed in order from latest received to earliest.

# L-8 AFCS FIRE MISSION - CONTINUED

## L-8.7 System Menus - Continued

L-8.7.14 Record of Fire - Continued

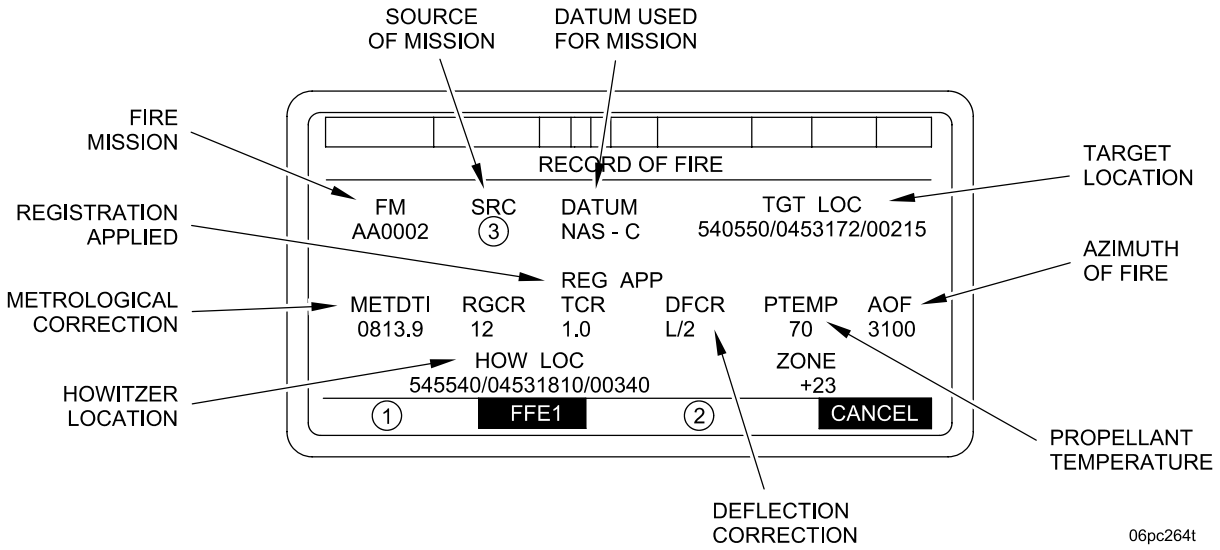


1. The "ADJ" soft key will be displayed if there is an adjust phase for the mission. Otherwise it will be blank.
2. The "FFE2" soft key will be displayed if there is a second Fire for Effect phase for the mission.
3. When the mission is received from an FDC, "FDC" will be displayed. If the mission is DIRECT or MANUAL, "OPR" will be displayed. If the mission is received from an Additional Subscriber, then "OTH" will be displayed.

- The "FFE1" soft key will be blank when the fire mission selected is a "MANUAL" or "DIRECT".
- The "FFE1" "FFE2", or "ADJ" soft keys will allow yo to view pre-shot data for that phase.
- The "CANCEl" soft key will display the RECORD OF FIRE menu.
- If the fire mission is an FDC computed mission, only the FFE1 soft key will be available.
- The "METDTI" field will show the date-time group from the MEET message.
- The following default criteria for FDC computed fire missions shall appear in the RECORD OF FIRE displays:

  MET (CURRENT NVM)
  POWDER TEMPERATURE (CURRENT NVM)
  MVV (-99.9)
  REGISTRATION DATA (ZEROS)
  TARGET LOCATION AND ELEVATION (ZEROS)

# L-8 AFCS FIRE MISSION - CONTINUED

## L-8.7 System Menus - Continued

L-8.7.14 Record of Fire - Continued

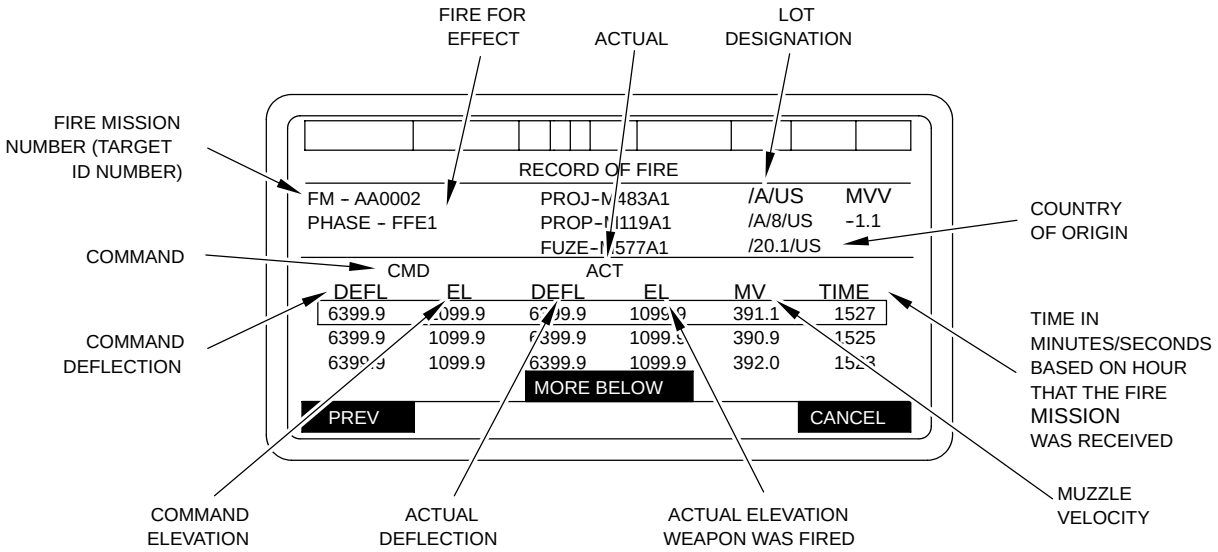


### NOTE

If more than 4 shots exist for a particular phase, three will initially be displayed and scrolling will be enabled. As the cursor is scrolled below the first three, two will be displayed, MORE ABOVE will appear on top of the shot data, and MORE BELOW will appear below the shot data.

If the fire mission is an FDC computed mission only initial shell and fuze data (eg ADJUST) shall be displayed.

The MVV entry is the total MVV applied to the phase.

# L-8 AFCS FIRE MISSION - CONTINUED

## L-8.7 System Menus - Continued

L-8.7.14.1 Fire Mission Mode.

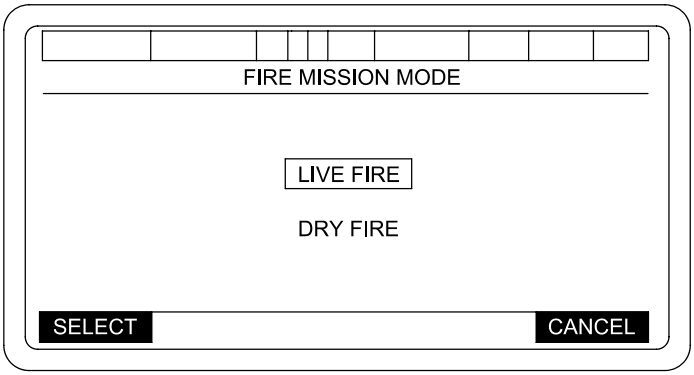


06pc269t

- When “LIVE FIRE” is selected, EFC updates shall be performed upon EOM/Abort Fire Mission Processing.
- When “DRY FIRE” is selected, Muzzle Velocity processing and EFC processing shall not be performed. All other functions are performed as they would be in a normal Live Fire Mode. An operator warning “D” shall be shown in position 4 of the Function Status Field. This warning shall remain in all screens until “LIVE FIRE” is selected.

L-8.7.15 Muzzle Velocity. For more accurate firing data when computing ballistics, measured muzzle velocities are entered into the AFCS. Also, muzzle velocities can be entered as they are measured. This is performed as followed:

**WARNING**

Ensure that correct propellant temperature and shell weights are entered in AFCS. Failure to comply will result in incorrect ballistic computations. This could result in injury or death to friendly troops.

# L-8 AFCS FIRE MISSION - CONTINUED

## L-8.7 System Menus - Continued

L-8.7.15 Muzzle Velocity - Continued

a. Box in MUZZLE VELOCITY on SETUP AND INFORMATION menu and press SELECT key to display a MUZZLE VELOCITY VARIATION screen.

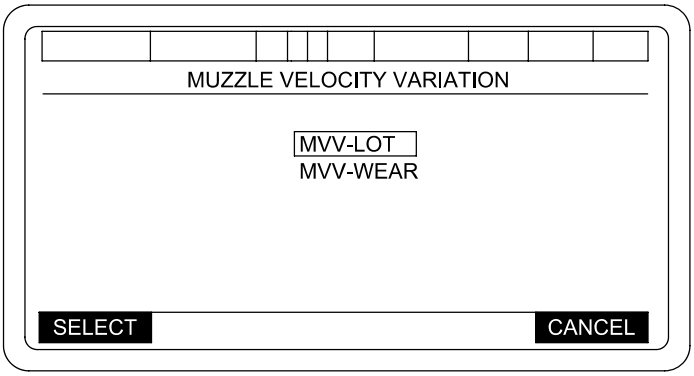


06pc266t

b. To delete muzzle velocity, box in MVV-LOT from the MUZZLE VELOCITY VARIATION screen and press SELECT.

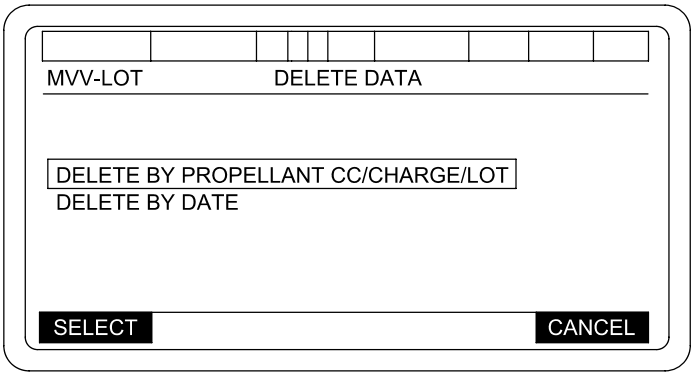


06pc266ta

# L-8 AFCS FIRE MISSION - CONTINUED

## L-8.7 System Menus - Continued

L-8.7.15 Muzzle Velocity - Continued

c. To delete muzzle velocity by propellant cc/charge/lot, box in DELETE BY PROPELLANT CC/CHARGE/LOT and press SELECT.

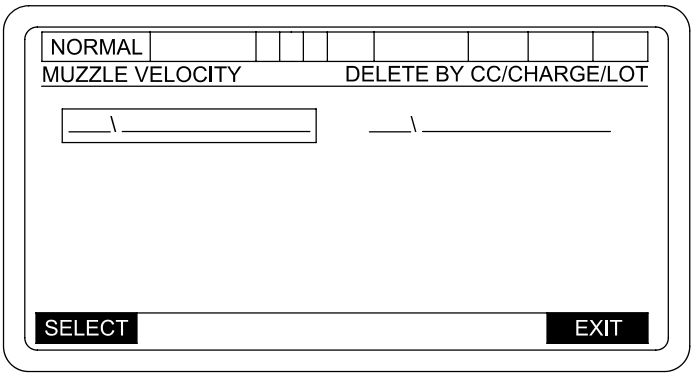


06pc273t

Lots are displayed in ascending ASCII sort sequence by country, manufacturer's propellant lot, and then propellant charge. When SELECT soft key is pressed the short message "DELETE VELOCITY DATA" "YES" "NO" will be displayed. YES causes the MVV Lot data for the selected propellant lot to be deleted from the display. NO allows the re-selection of a propellant lot. While extended lot codes are being retrieved and sorted for display, the following message shall be displayed:

"RETRIEVING LIST PLEASE WAIT"

If no lots are available for deletion, the SELECT key will be blanked, you will have a CANCEL at soft key 4 and the message "NO LOTS TO DELETE" will be displayed.

If there is more than one page of entries in the MVV-Lot database, you will have a "NEXT PAGE" at soft key 2 and "PREVIOUS PAGE" at soft key 3. If the first page of entries is displayed, the "PREVIOUS PAGE" soft key will be blanked. If the last page of entries is displayed, the "NEXT PAGE" soft key will be blanked.

EXIT replaces the CANCEL soft key once a lot has been deleted. When the "EXIT" soft key is pressed, the message "PERM DELETE LOTS" "YES" "NO" shall be displayed. If YES is selected, the propellant lots will be deleted from the MVV-Lot Database. If NO is selected, propellant lots shall not be deleted from the MVV-Lot Database.

# L-8 AFCS FIRE MISSION - CONTINUED

## L-8.7 System Menus - Continued

L-8.7.15 Muzzle Velocity - Continued

d. To delete muzzle velocity by the date box in DELETE BY DATE and press SELECT.

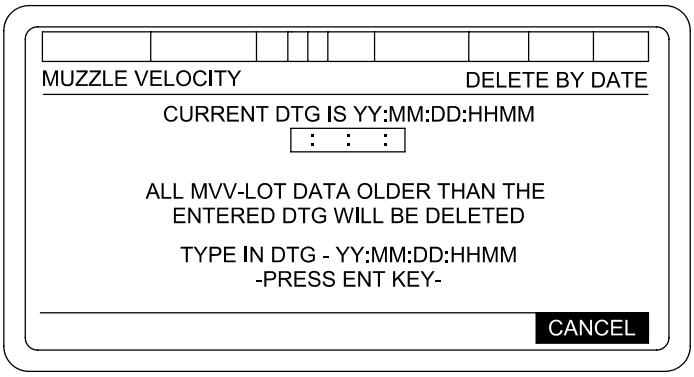


06pc267t

When ENT key is pressed, a validity check is performed on the entered date/time. If the date/time is invalid, you will receive a short error message: "INVALID DTG VALUE" "ACK". You will be required to enter a new Date/Time value. If the date/time data is valid, a short message "DELETE MVV' "YES" "NO". YES causes all MVV Lot data older than the entered DTG to be deleted. NO allows re-entry of the DTG.

e. To update muzzle velocity variation tube wear information, box in MVV-WEAR from the MUZZLE VELOCITY VARIATION screen and press SELECT.

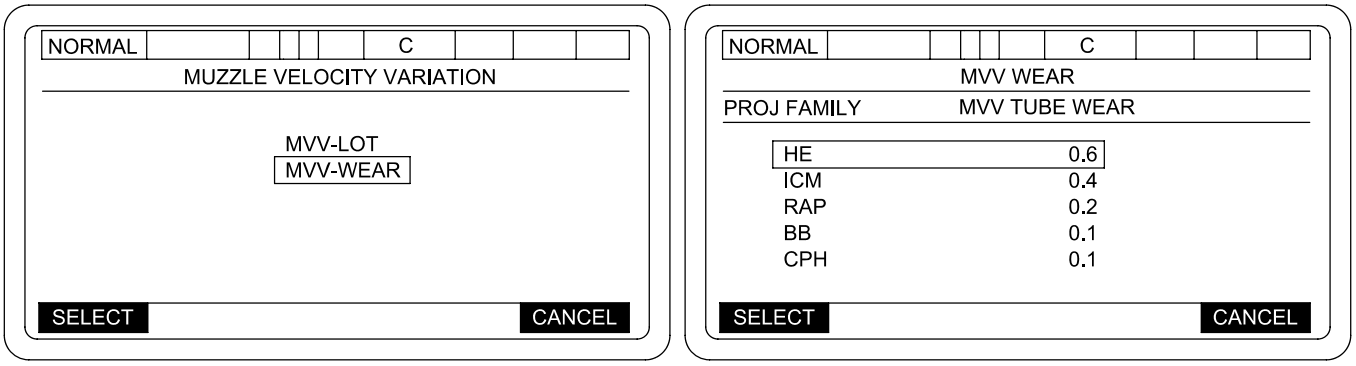


06pc267ta

When an entry has been selected the "+/-" will be displayed at soft key 2. The phrase "ENTER A VALUE BETWEEN -49.9 AND +49.9" and "PRESS ENT KEY" will be displayed. If the value is greater than +/- 49.9, you will receive a short error message: "VALUE TOO BIG" "ACK" or "VALUE TOO SMALL" "ACK". The value will be returned to the previous value displayed and allow re-entry. when you have updated an entry with a different value, "UPDATE" will be displayed at soft key 2. Press "UPDATE". This will update the MVV-Wear database and return to the MUZZLE VELOCITY VARIATION screen.

# L-8 AFCS FIRE MISSION - CONTINUED

## L-8.7 System Menus - Continued

L-8.7.16 Operational Maintenance Transition.

The AFCS will provide the capability for the AFCS operator to transition from NORMAL OPERATIONAL MODE functions to MAINTENANCE MODE functions and back to NORMAL OPERATIONAL MODE without having to POWER DOWN, perform SYSTEM RESTART, or perform NORMAL OPERATIONAL MODE initialization procedures. This capability will only be available when the AFCS has successfully completed an NORMAL OPERATIONAL MODE initialization. Selection of the MAINTENANCE MODE from the AFCS MODE SELECTION display will not allow the AFCS operator to transition to NORMAL OPERATIONAL MODE without first having to POWER DOWN, perform SYSTEM RESTART, or do a NORMAL OPERATIONAL MODE "INITIALIZATION" procedure.

When MAINTENANCE MODE functions are selected from the AFCS NORMAL OPERATIONAL MODE, the PDIU will be directed to limit instructive testing to only respond to Fire Mission requests. When MAINTENANCE MODE is entered from the AFCS SELECT OPERATIONAL MODE display, the PDIU will be allowed to perform its full range of intrusive tests.

If a Fire Mission is received while the AFCS is in a MAINTENANCE MODE function which was activated from the NORMAL OPERATIONAL MODE, the operator will be prompted to either accept or reject the mission. NORMAL OPERATIONAL acceptance of the mission will automatically terminate all MAINTENANCE MODE function activity and transition to NORMAL OPERATIONAL MODE Fire Mission processing. Operator rejection of the mission will cause an operator ABORT of the Fire Mission and will cause the AFCS to remain in the currently active MAINTENANCE MODE function.

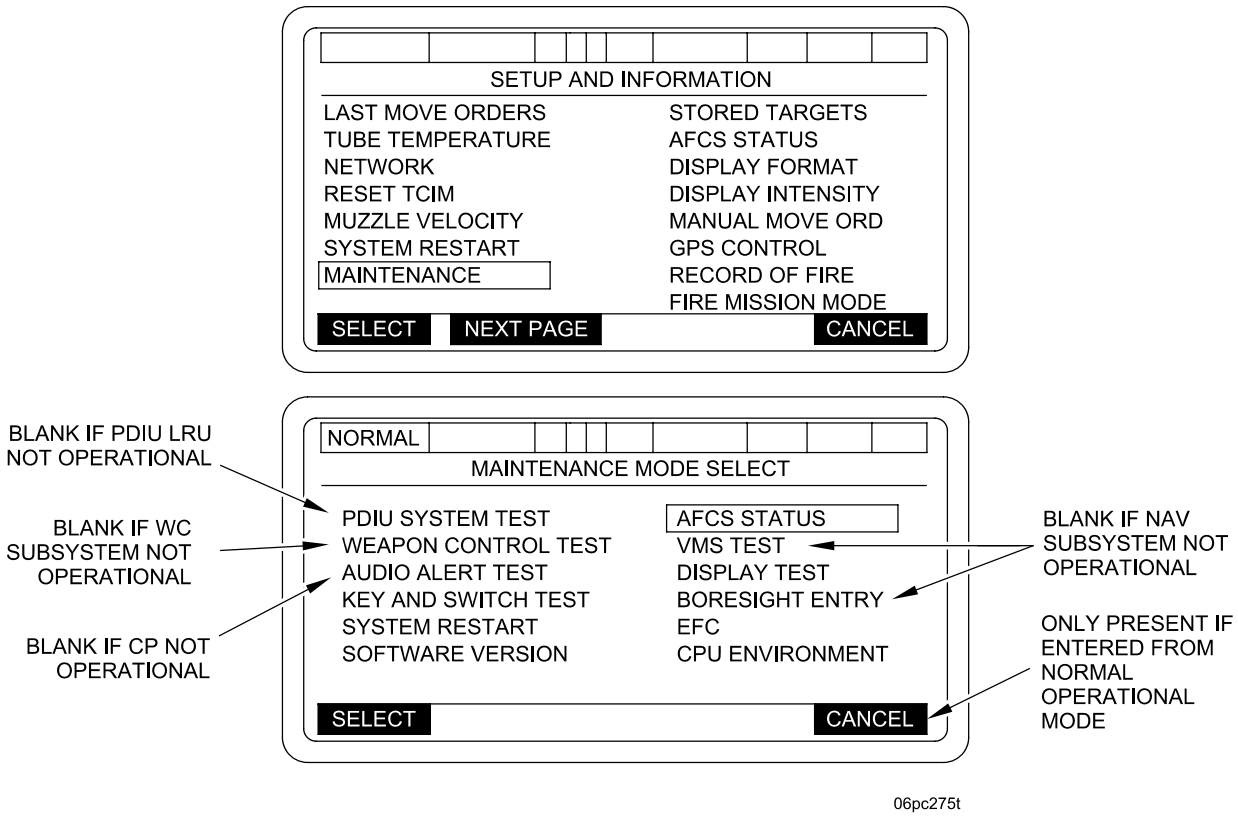

# L-9 AFCS AND PDIU FAULT DETECTION.

## L-9.1 Power Up Built-In-Test (BIT).

The BIT is a self-test of the AFCS. This test occurs when the vehicle MASTER power is ON and the AFCS POWER switch (located on the DU), is placed to ON. By placing the AFCS POWER switch and PCU circuit breakers to ON, the DU will display the screen shown.

As each of the eight subsystems is tested, the -- will change and provide a subsystem condition. An OK condition (see illustration below), indicates a subsystem is 100% functional.

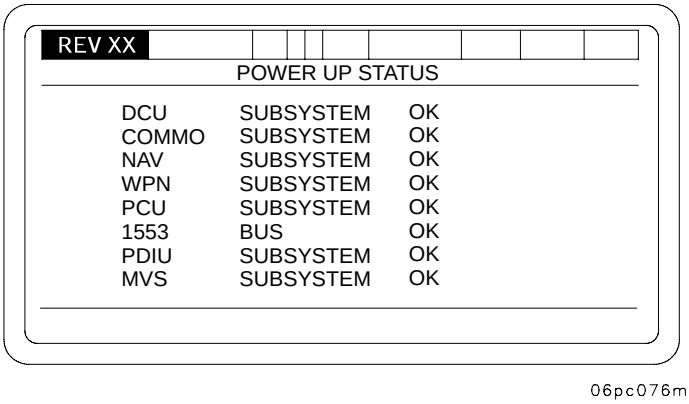


**NOTE**

If DCU contains an incorrect configuration, the AFCS will not allow the operator to select normal operations until a correct DCU software configuration is downloaded.

When configuration verification checking indicates that the executed software configuration is not the same as the acquired software configuration, a short error message “INVALID SOFTWARE CONFIGURATION”, “ACK” will appear on the soft key label line of the DU.

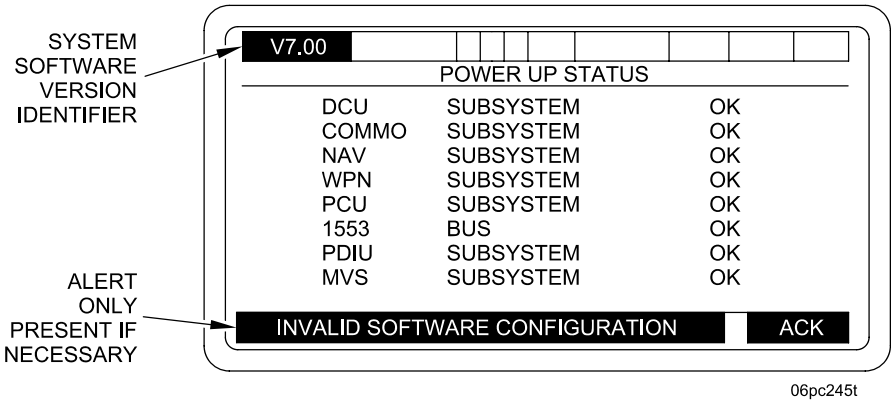


When the message is acknowledged, the AFCS will proceed to the “SELECT OPERATIONAL MODE” menu. To view detailed software configuration information for each LRU, MAINTENANCE should be selected, IAW procedure in para L-9.2.

# L-9 AFCS AND PDIU FAULT DETECTION - CONTINUED

## L-9.1 Power Up Built-In-Test (BIT) - Continued

The display shown in the example below illustrates two conditions, DEGRADED and OUT.

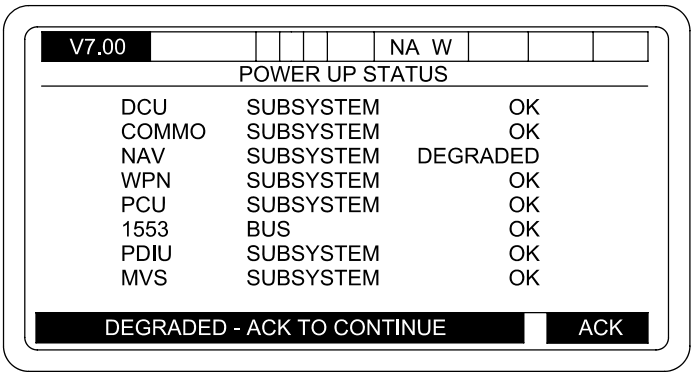


06pc244t

One condition is a DEGRADED condition. The DEGRADED condition indicates a subsystem is not 100% functional. When a degraded condition exists, it will be indicated in field 7 by one or a combination of these letters with the following meaning:

N - Navigation
A - GPS Aiding
C - Communication Processing
W - Weapon Controller

# L-9 AFCS AND PDIU FAULT DETECTION - CONTINUED

## L-9.1 Power Up Built-In-Test (BIT) - Continued

These two conditions, OUT and DGRD, will be tested to determine where the fault exists and the extent of the fault. After a fault has been detected (OUT or DGRD condition during self-test) press the illuminated soft key beneath the word ACK. After pressing the ACK key, the screen shown below will be displayed.

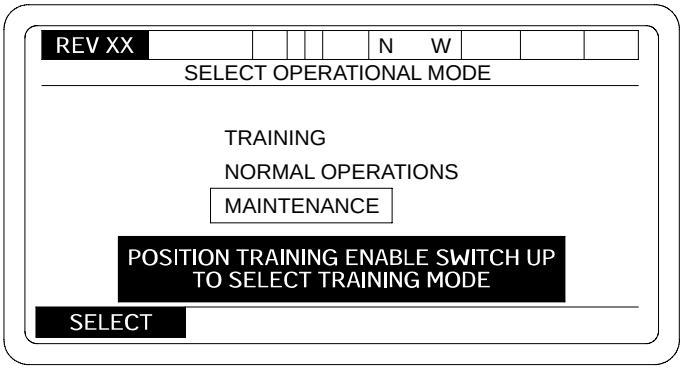


hipc4198

The display above depicts three modes: TRAINING, NORMAL OPERATION and MAINTENANCE. To select MAINTENANCE MODE, box in MAINTENANCE as shown in the illustration above. Press illuminated soft key beneath the word SELECT to enter maintenance mode master menu.

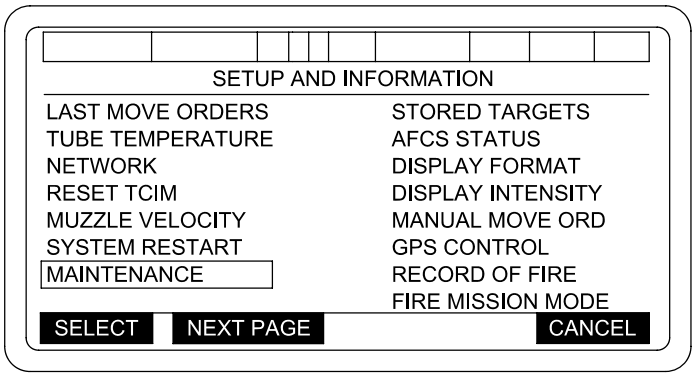


06pc278t

The AFCS also provides the capability for the AFCS operator to transition from Normal Operational Mode functions to Maintenance Mode functions and back to Normal Operational Mode without having to perform a power down sequence, system restart, or Normal Operational Mode initialization procedures. This capability shall only be available when the AFCS has successfully completed an Normal Operational Mode initialization. Selection of the Maintenance Mode from the AFCS Mode Selection display shall not allow the AFCS operator to transition to Normal Operational Mode without first performing either a power down sequence or a system restart.

When Maintenance Mode functions are selected from the AFCS Operational Mode, the PDIU shall be directed to limit intrusive testing to only those tests which will not impact the ability of the AFCS to quickly respond to fire mission requests. When Maintenance Mode is entered from the AFCS Mode Selection display, the PDIU shall be allowed to perform its full range of intrusive tests.

# L-9 AFCS AND PDIU FAULT DETECTION - CONTINUED

## L-9.1 Power up Built-In-Test (BIT) - Continued

If a fire mission is received while the AFCS is in a Maintenance Mode function which was activated from the Operational Mode, the operator shall be prompted to either accept or reject the mission. Operator acceptance of the mission shall automatically terminate all Maintenance Mode function activity and transition to Normal Operational Mode fire mission processing. Operator rejection of the mission shall cause an operator abort of the fire mission and shall cause the AFCS to remain in the currently active Maintenance Mode function.

## L-9.2 AFCS Status.

To display the AFCS STATUS menu:

a. Select MAINTENANCE from the SETUP AND INFORMATION menu. Press SELECT key. This will cause the MAINTENANCE MODE SELECT menu to be displayed.

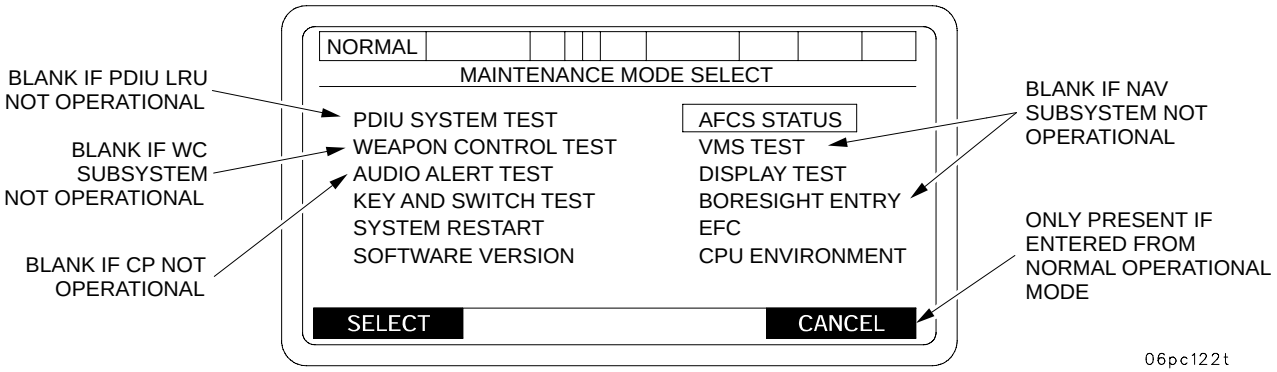


If MAINTENANCE is selected from NORMAL OPERATIONAL MODE, the MAINTENANCE screen will display “SELECT” and “CANCEL” options above soft keys 1 and 4 in field 16.

b. Select AFCS STATUS from the MAINTENANCE MODE SELECT menu. Press SELECT key. This will cause the AFCS STATUS menu to be displayed.

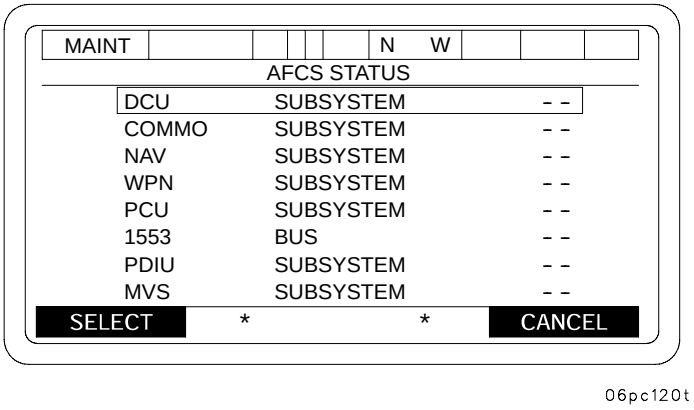


The AFCS STATUS menu will display the various subsystem faults. Using this fault list (showing Degraded Mode of each subsystem), you will be able to determine if Degraded Mode is acceptable depending on mission requirements.

# L-9 AFCS AND PDIU FAULT DETECTION - CONTINUED

## L-9.2 AFCS Status - Continued

Certain degraded subsystems will not interfere with AFCS operation or mission capability. It is important to know, however, which subsystem is degraded (and which BIT item has failed). Knowing which failure to compensate for/correct will allow you to carry on with your mission. The various LRUs communicate/send messages periodically within AFCS. Whenever an LRU has not sent a message within a certain amount of time, the LRU timer sends an LRU FAILED message. In the event you get an LRU FAILED message, go into MAINTENANCE menu, check AFCS STATUS. If LRU failed, notify unit maintenance.

The AFCS STATUS menu is used by unit maintenance personnel, as well as by the operator. The operator must notify unit maintenance of any subsystem listed with a status of DEGRADED or OUT, then no faults within that subsystem are indicated. Look at each subsystem carefully.

Select the subsystem in question. Further information will be displayed to help determine where the fault lies.

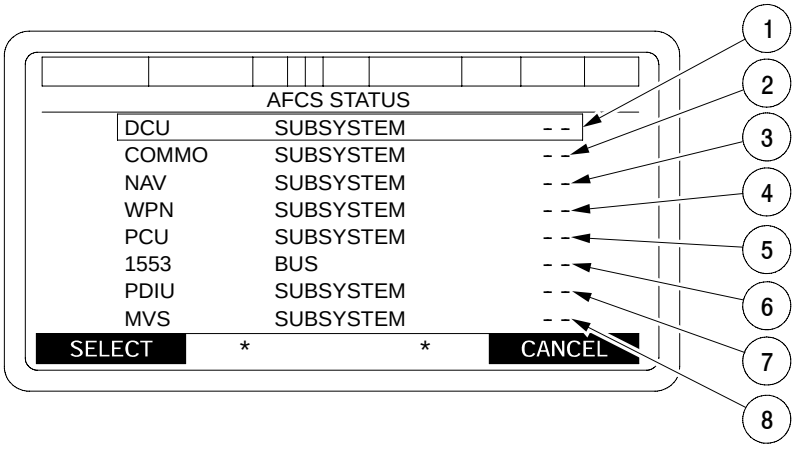


(1) = (OK, DEGRADED, OUT)

(2) = (OK, DEGRADED, OUT)

(3) = (OK, DEGRADED, OUT)

(4) = (OK, DEGRADED, OUT)

(5) = (OK, DEGRADED)

(6) = (OK, DEGRADED, OUT)

(7) = (OK, OUT)

(8) = (OK, OUT,--)Where -- indicates that the AFCS could not connect to the MVS

SELECT = SELECT A SUBSYSTEM

CANCEL = CANCEL and return to SETUP AND INFORMATION menu or INTERNAL MAINTENANCE menu

* = No test appears for these softkeys. Pressing FUNCTION KEY 2 or 3 will clear ET SIMULATED FAILURES

06pc118t

# L-9 AFCS AND PDIU FAULT DETECTION - CONTINUED

## L-9.2 AFCS Status - Continued

L-9.2.1 DCU SUBSYSTEM STATUS Display.

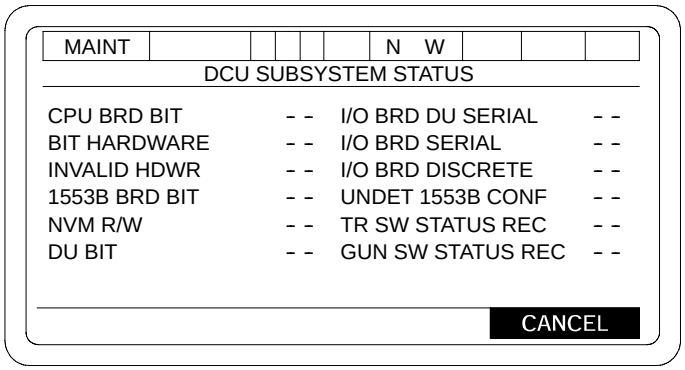


- - = (OK, FAIL)

CANCEL = Return to the AFCS STATUS display

06pc119t

L-9.2.2 COMMO SUBSYSTEM STATUS Display.

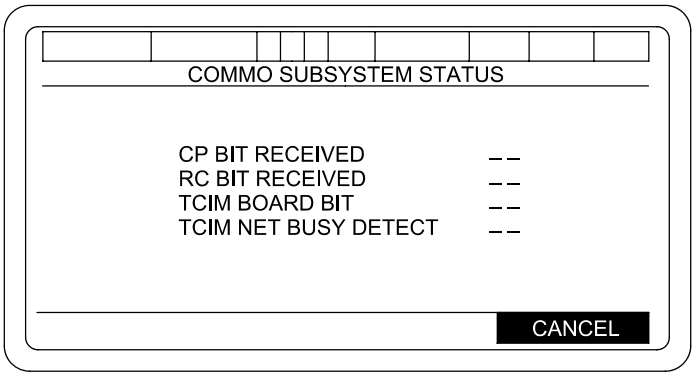


_ _ = (OK, FAIL)

CANCEL = Return to the AFCS STATUS display

06pc121ta

# L-9 AFCS AND PDIU FAULT DETECTION - CONTINUED

## L-9.2 AFCS Status - Continued

L-9.2.3 NAV SUBSYSTEM STATUS Display.

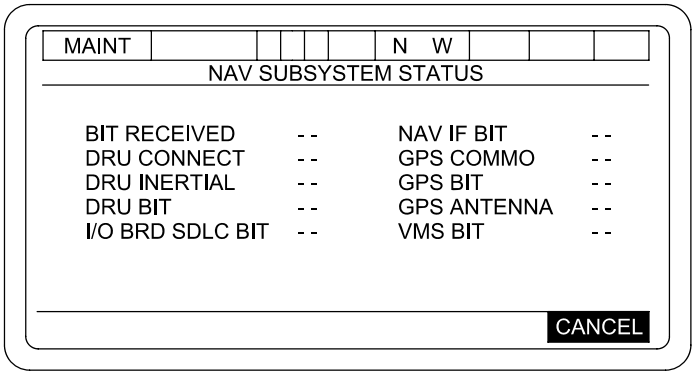


06pc124t

- - = (OK, FAIL)

CANCEL = Return to the AFCS STATUS display

L-9.2.4 WPN SUBSYSTEM STATUS Display.

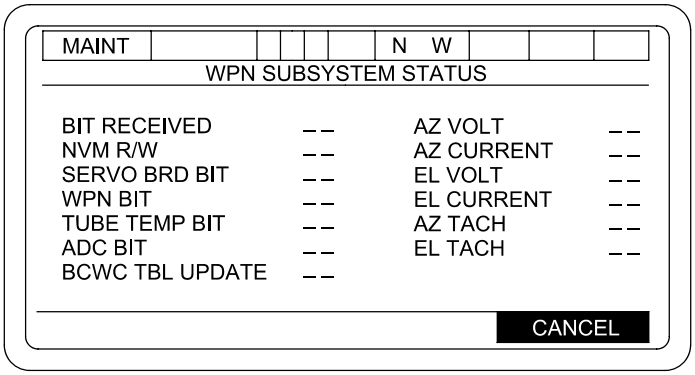


__ = (OK, FAIL)

CANCEL = Return to the AFCS STATUS display

06pc125ta

# L-9 AFCS AND PDIU FAULT DETECTION - CONTINUED

## L-9.2 AFCS Status - Continued

L-9.2.5 PCU SUBSYSTEM STATUS Display.

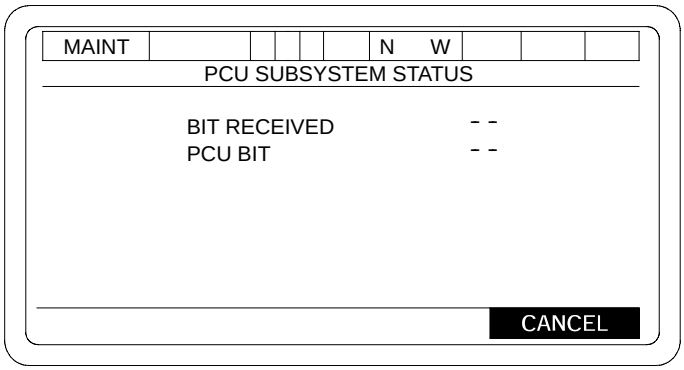


- - = (OK, FAIL)

CANCEL = Return to the AFCS STATUS display

06pc126t

L-9.2.6 1553 BUS STATUS Display.

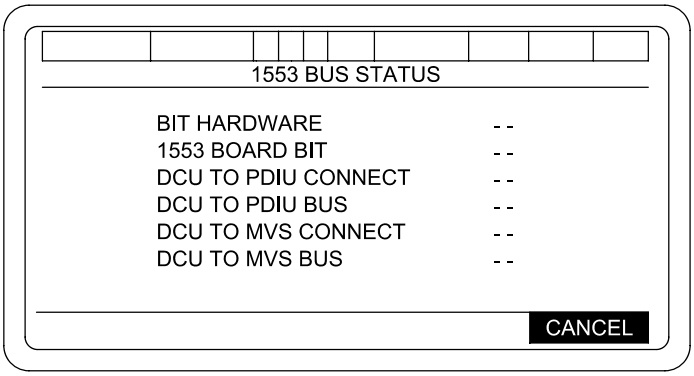


- - = (OK, FAIL)

CANCEL = Return to the AFCS STATUS display

06pc127ta

# L-9 AFCS AND PDIU FAULT DETECTION - CONTINUED

## L-9.2 AFCS Status - Continued

L-9.2.7 PDIU SUBSYSTEM STATUS Display.

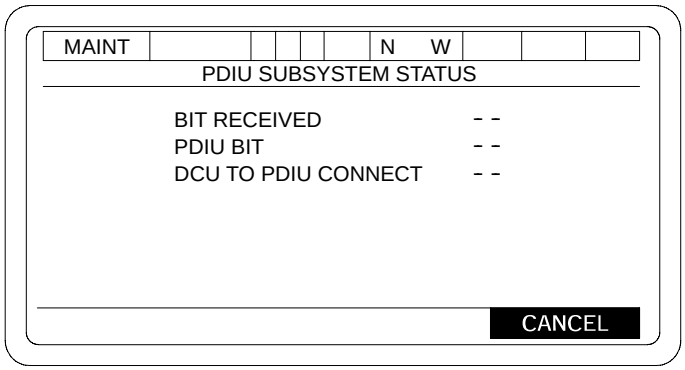


- - = (OK, FAIL)

CANCEL = Return to the AFCS STATUS display

06pc128t

L-9.2.8 MVS SUBSYSTEM STATUS Display.

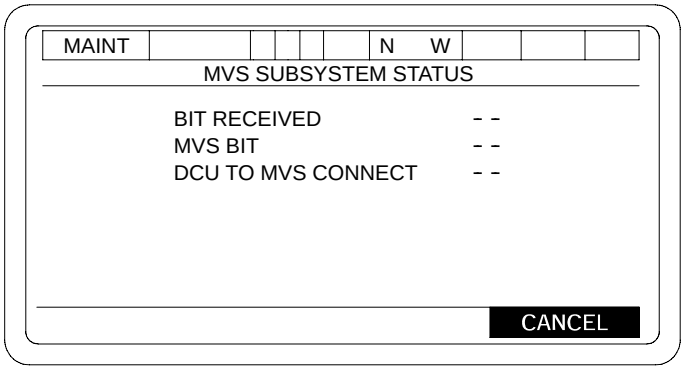


- - = (OK, FAIL)

CANCEL = Return to the AFCS STATUS display

06pc129t

# L-9 AFCS AND PDIU FAULT DETECTION - CONTINUED

## L-9.3 PDIU System Test.

To start the PDIU SYSTEM TEST, move the cursor with the arrow keys until the PDIU SYSTEM TEST is boxed, as shown below.

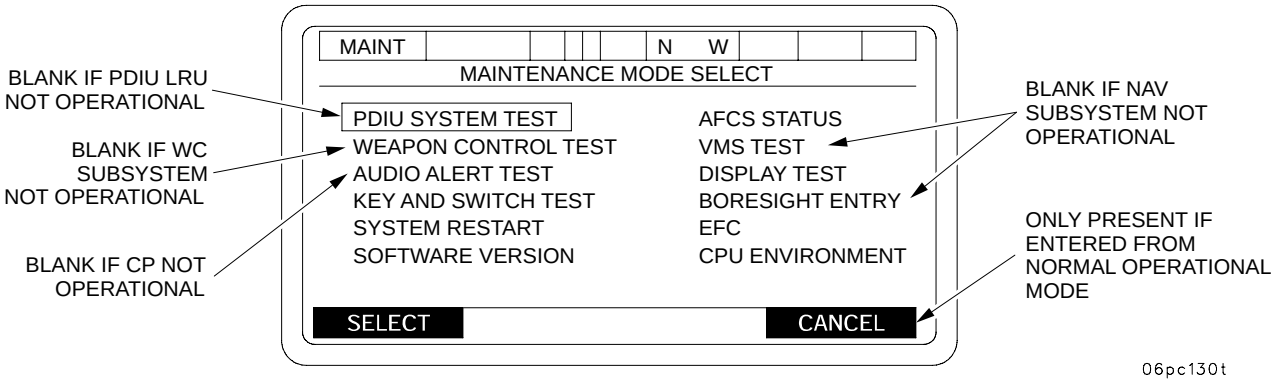


Press SELECT. The screen will display the prompt “ARE YOU SURE,” YES OR NO. Press “YES”. The screen will display the following message:

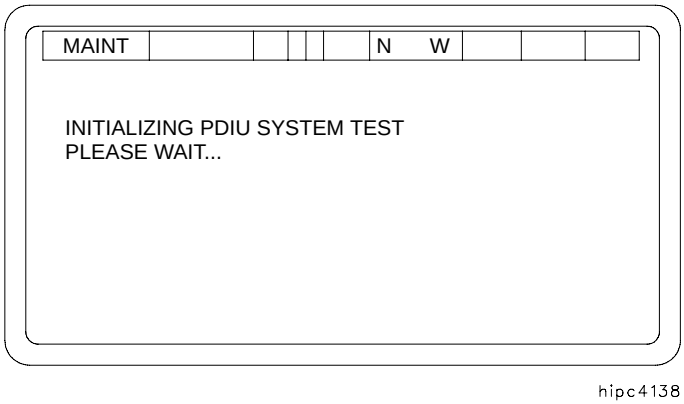


This message requires no action on your part. In 3 to 5 seconds, when the system is ready, it will be replaced with a menu display like the following:

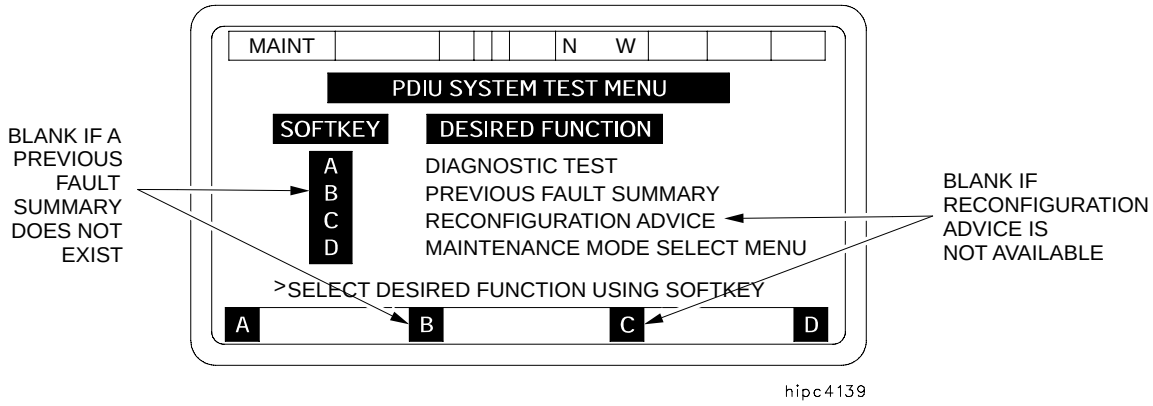


This menu allows you to select whichever function you wish to perform.

# L-9 AFCS AND PDIU FAULT DETECTION - CONTINUED

## L-9.3 PDIU System Test - Continued

**NOTE**

The previous Fault Summary and Reconfiguration Advice functions are not always available. These options will not be displayed if their functions cannot be performed. (The different menu screens that can be seen because of this are shown at the end of the description.)

Each of the four functions will now be described separately.

DIAGNOSTIC TEST

To perform DIAGNOSTIC TEST, press the “A” softkey.

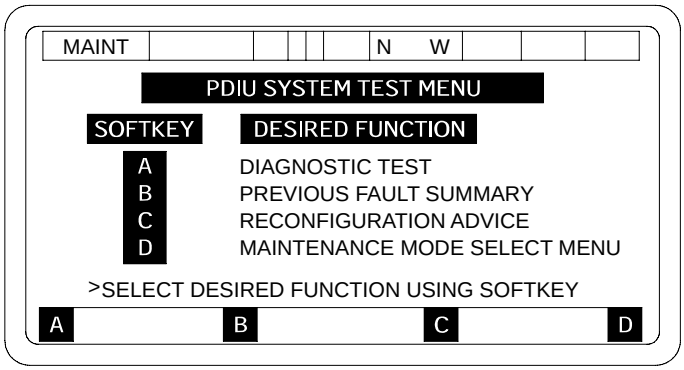


hipc4140

The next screen allows you to select which part of the system you would like to test based upon the problem you are troubleshooting. The Gun Positioning System will not be available until the hydraulics segment has been successfully tested (the PDIU should not be reset). To test the entire system, all four segments should be tested in the order they appear on the screen. As each segment passes its test, the next segment should be selected from this screen without resetting the system. If any of the segmented tests fail, the fault should be corrected, the AFCS should be reset and the testing should begin again with the first test. Continuing testing without resetting the system can result in false failures.

To perform any of the segment tests select “YES” when that segment appears behind “CHOOSE OPTION”.

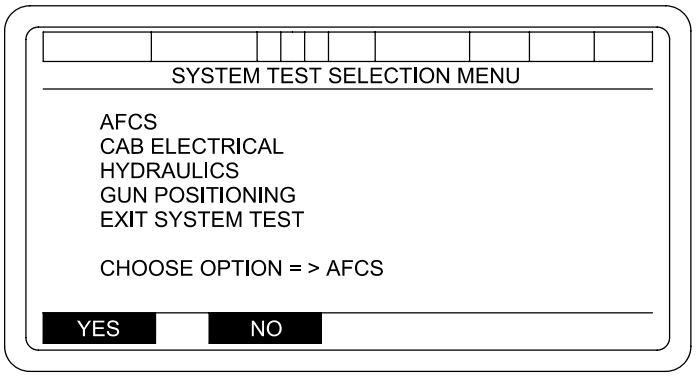


06pc377mb

# L-9 AFCS AND PDIU FAULT DETECTION - CONTINUED

## L-9.3 PDIU System Test - Continued

The following screen will be displayed.

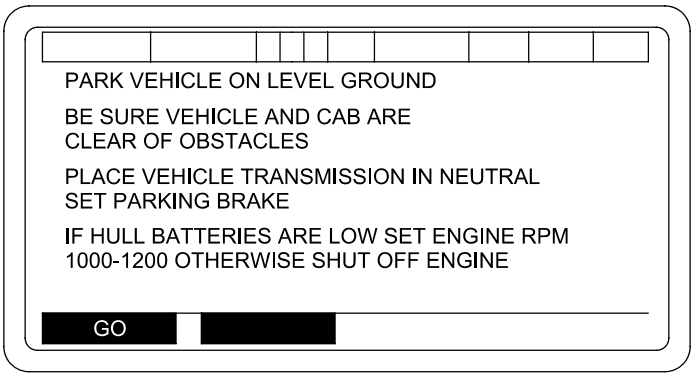


06pc378ma

When you have completed the required actions, press GO softkey and testing will continue.

During the next few screens, you will be given the CANCEL softkey option. CANCEL is there in case you selected the DIAGNOSTIC TEST function (from the menu) by mistake or in case you changed your mind. When you press CANCEL, the system will display the PDIU SYSTEM TEST MENU again.

Throughout diagnostic testing, you will be given instructions. When you press GO, you are telling the system that you have done the task it asked for. It is important that you complete the task before pressing GO because many of the decisions that the system makes are based on the actions that you made. A typical instruction is shown below:

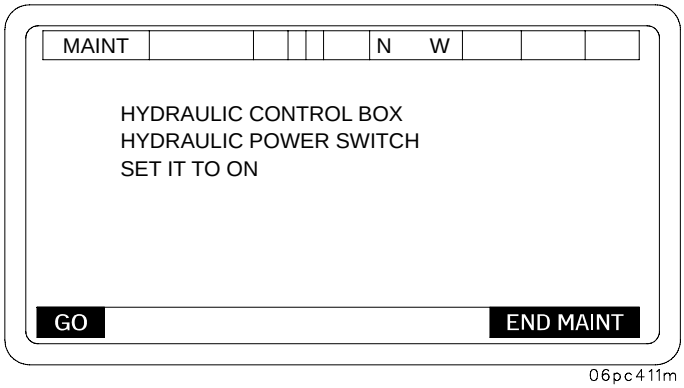


06pc411m

When you are instructed to perform an action such as the screen below, the PDIU measures the voltage of the switch.

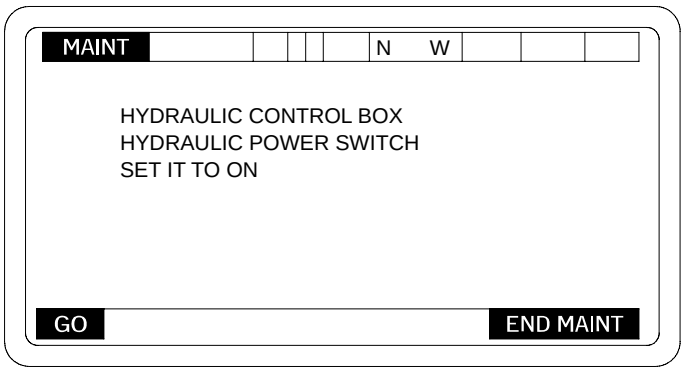


06pc408m

# L-9 AFCS AND PDIU FAULT DETECTION - CONTINUED

## L-9.3 PDIU System Test - Continued

If the result is not correct, then you are asked if you performed the action correctly, as shown in the screen below.

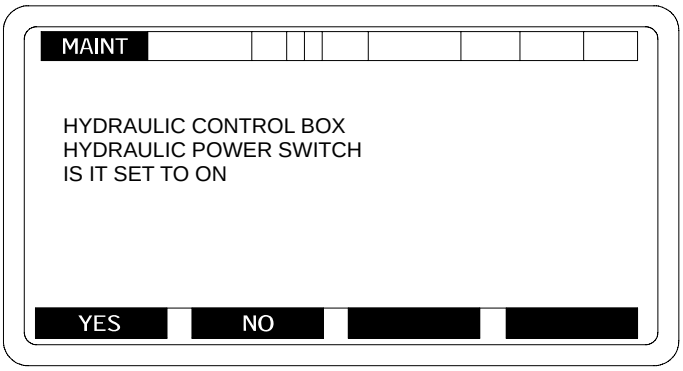


06pc409m

If you answer “YES”, a fault will be detected by the PDIU. If you answer “NO”, you will be given another chance to perform the action correctly. Then, if the action is not performed correctly, a fault will be detected by the PDIU.

Most of the displays in the main section of the DIAGNOSTIC TEST will include an END MAINT softkey at the bottom of the display. When this is present, you have the option of stopping the test at that point. If you press END MAINT, testing will immediately stop and you will see the Fault Summary display with all of the test results up to where you stopped. This feature is provided to allow you to return to normal operations with a minimum of delay if necessary. REMEMBER - When you press END MAINT, the system can only report the results of the test up to where you stopped. There may be further faults not detected.

During diagnostic testing, you will also be asked to answer questions. A typical question is shown below:

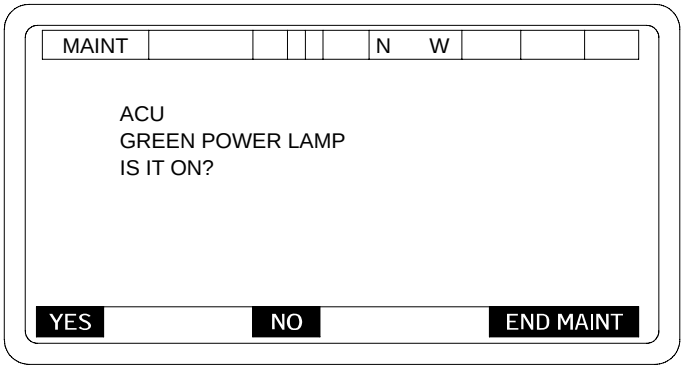


06pc407m

Questions will always be asked so that a YES or NO answer is possible by pressing the YES or NO soft keys. The system is using your ability to see, feel and hear to get the information it needs. It uses your answers to make decisions about functions that cannot be measured directly by the PDIU.

# L-9 AFCS AND PDIU FAULT DETECTION - CONTINUED

## L-9.3 PDIU System Test - Continued

Several times during diagnostic testing, you will see messages that start with the words “TEST IN PROGRESS” like the following screen:

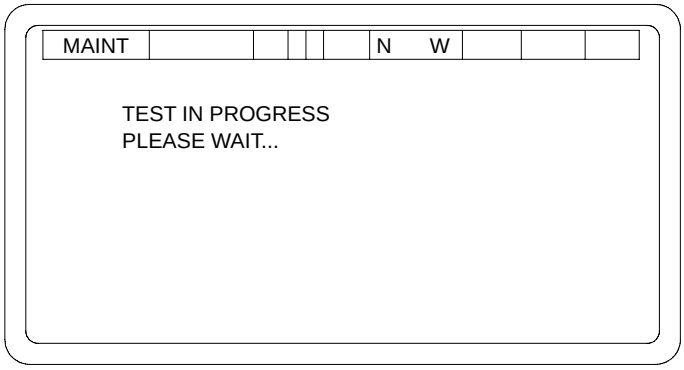


hipc4144

These screens have no labels for the softkeys at the bottom of the screen and require no response. They are intended to let you know that the system has recognized your last response and is busy with a long test operation. When it is ready to continue, the display will automatically change to a question or instruction message

Most faults will be isolated as far as possible by the PDIU during the normal sequence of DIAGNOSTIC TEST. Usually, the test sequence will run to completion and display the Fault Summary screen. However, some faults can be isolated further. This requires extra testing which can involve disconnecting cables and opening the hydraulic compartment. When one of these faults is detected, the system will remember it until it has finished all of the fault detection tests. It will then display a special menu screen like the following:

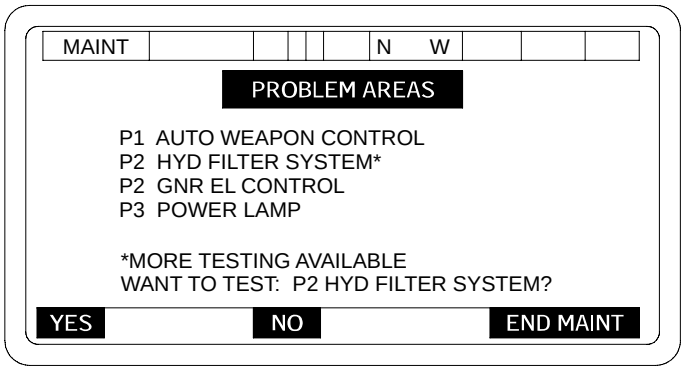


hipc4146

Each of the problem areas that requires extra testing will be displayed with an asterisk (*). The question line at the bottom will have the same name of the first extra test problem area. You can choose to continue testing this problem area by pressing YES. If you press NO, the name of the next extra test problem area will appear. As long as you continue to press NO, the names of the * problem areas will appear in the question, one at a time. If you decide not to do any of the extra testing, press END MAINT and the system will immediately display the Fault Summary.

# L-9 AFCS AND PDIU FAULT DETECTION - CONTINUED

## L-9.3 PDIU System Test - Continued

If you press the YES softkey for one of the problem areas, testing will continue with instructions and questions until the fault has been isolated as far as possible by the PDIU. When the extra testing is complete, you will see a screen like the following:

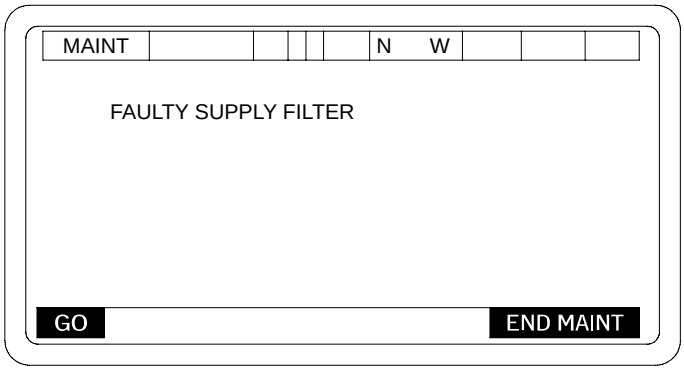


hipc4147

This screen may show one faulty LRU or a short list of possible faulty LRUs that must be isolated further by manual troubleshooting procedures. It tells you that the PDIU has done all of the testing it can. When you press GO, the Fault Summary screens will begin.

The first screen of the Fault Summary sequence will be definition of the Fault Priority Codes assigned to each fault message.

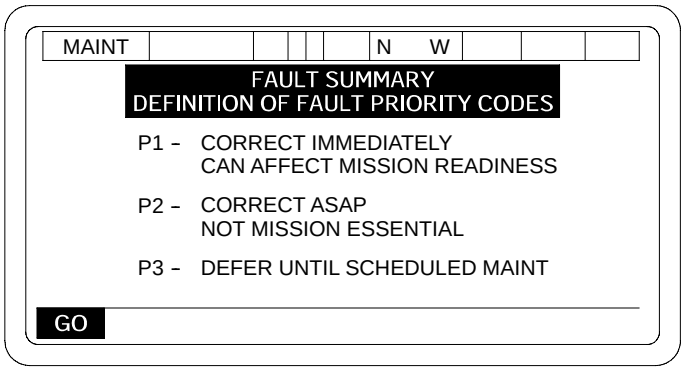


hipc4148

P1 - These faults require immediate attention. You have lost or may soon lose a major system function that may affect your mission capabilities.

P2 - These faults do not immediately affect your mission readiness but should be corrected as soon as possible.

P3 - These faults can be deferred until a scheduled maintenance period.

# L-9 AFCS AND PDIU FAULT DETECTION - CONTINUED

## L-9.3 PDIU System Test - Continued

The fault definition screen is followed by a Fault Summary list like the one shown on the next screen.

**NOTE**

All of the information in the Fault Summary screens should be reported to Unit Maintenance. It is a good idea to copy the list of problems and possible faults before pressing GO. If you forget or don't have time to copy all the information now, it can be redisplayed by selecting the Previous Fault Summary option in the PDIU SYSTEM TEST MENU screen the next time it is displayed, even if power has been removed.

Press the GO softkey to continue.

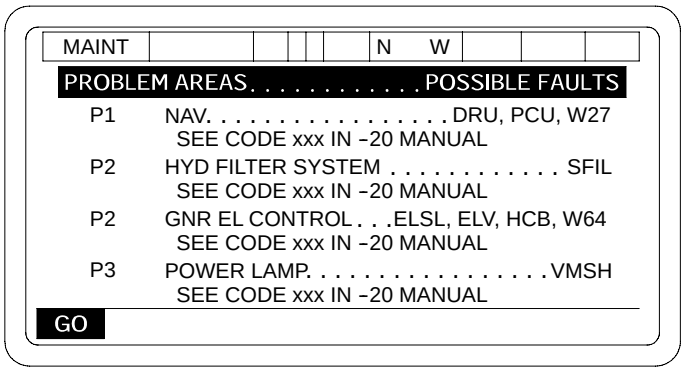


hipc4149

The Fault Summary screens are a list of all of the problems found during screen DIAGNOSTIC TEST. When no problems have been detected, this will simply say "NO FAULTS FOUND" and the Definition of Fault Priority Codes screen will not be shown. However, when problems have been detected, a list like the one above will appear.

When the Fault Summary displays problem areas, it also displays a list of possible faulty LRUs for each problem area and a -20 manual code number. When only one LRU is listed for a problem area, DIAGNOSTIC TEST has determined that the LRU is definitely faulty and must be replaced. When more than one LRU (separated by commas) is listed as a possible fault for a problem area, further isolation by Unit Maintenance is required to determine which one of the LRUs listed is faulty.

The code number (xxx) listed in the "SEE CODE XXX IN -20 MANUAL" message is a reference to an index in the -20 manual which lists the page where the correct manual troubleshooting procedure can be found.

# L-9 AFCS AND PDIU FAULT DETECTION - CONTINUED

## L-9.3 PDIU System Test - Continued

The Fault Summary list can take up to three screens. When you have finished viewing or copying the information on each Fault Summary screen, press GO to continue. If more faults were detected, the next Fault Summary screen will be displayed. Some faults may not appear due to limited space on the screens. After corrective actions have been accomplished, the test should be re-run to ensure no additional faults are detected. If Reconfiguration Advice is available for the detected faults, you will be asked the following question:

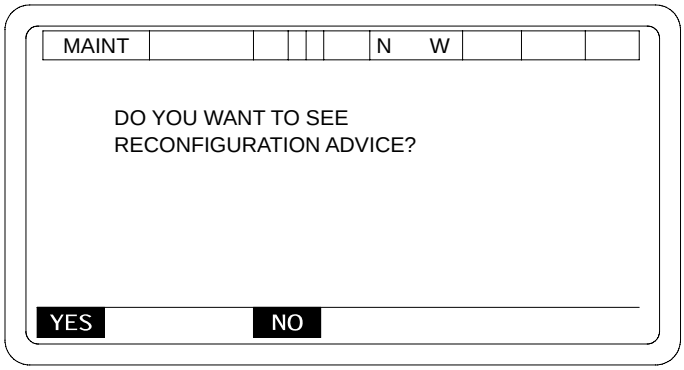


hipc4150

This screen offers you the chance to get further information on what backup modes of operation are available for subsystems that are not operational. If you press YES, a screen like the following will appear:

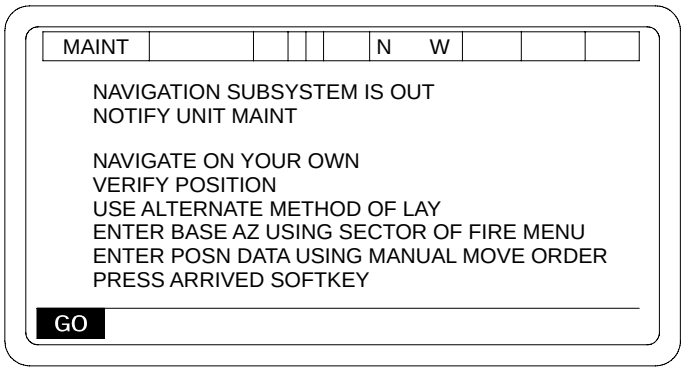


hipc4151

# L-9 AFCS AND PDIU FAULT DETECTION - CONTINUED

## L-9.3 PDIU System Test - Continued

Reconfiguration Advice may take more than one screen depending on which (and how many) subsystems are not operational. After you have read each screen, press the GO softkey to continue.

After all Reconfiguration Advice messages have been read, you will be given two screens of instructions that will return the vehicle to a given state. At this point, testing is complete. When you press the final GO, the screen will display the PDIU SYSTEM TEST MENU again.

General Notes About DIAGNOSTIC TEST

The sequence of messages and displays that you see during DIAGNOSTIC TEST will vary depending on the number of faults present in the vehicle. The system will choose its own path through the tests and guide you with instructions. Don't be concerned if you see messages and questions you haven't seen before. The system is simply troubleshooting a fault you haven't had before.

PREVIOUS FAULT SUMMARY

To view the PREVIOUS FAULT SUMMARY, press the B softkey.

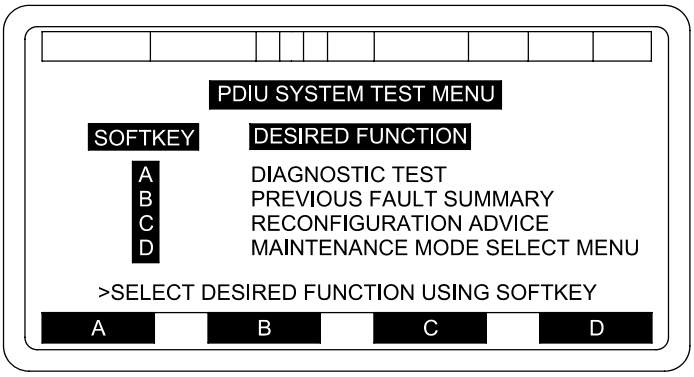


06pc527mc

The PREVIOUS FAULT SUMMARY is a list of all the problems found during the last DIAGNOSTIC TEST performed. If no problems were detected, the following message will be displayed:

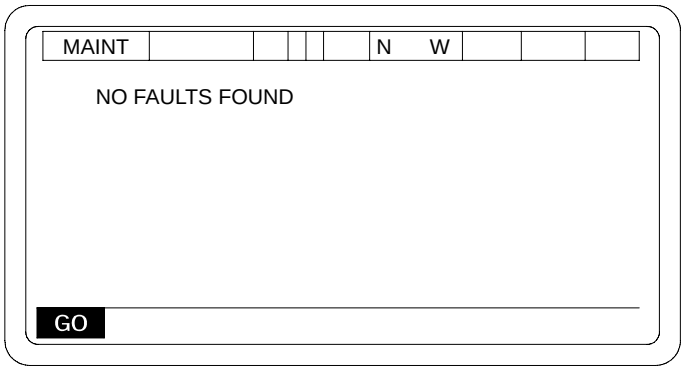


hipc4152

# L-9 AFCS AND PDIU FAULT DETECTION - CONTINUED

## L-9.3 PDIU System Test - Continued

If the last DIAGNOSTIC TEST was aborted before completion, you will also see the following message:

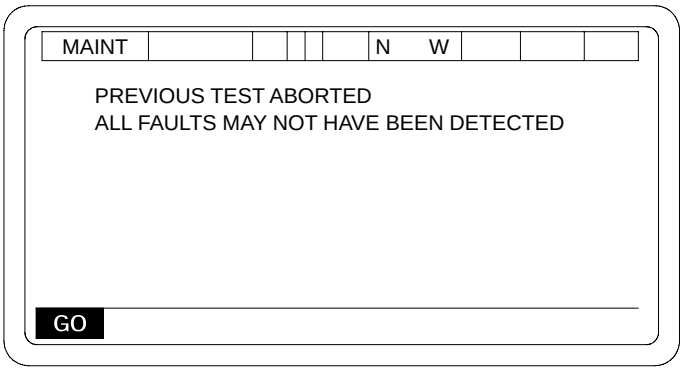


hipc4153

When all screens in the Previous Fault Summary display sequence have been viewed, the PDIU SYSTEM TEST MENU will automatically be displayed again.

RECONFIGURATION ADVICE

To view Background Monitoring Mode RECONFIGURATION ADVICE, press the C softkey.

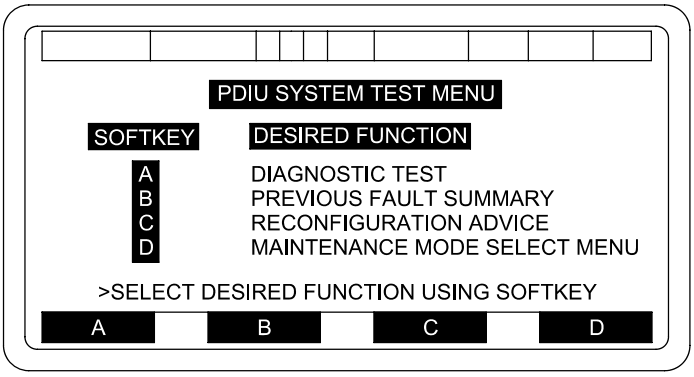


06pc527mc

A screen like the following will be displayed:

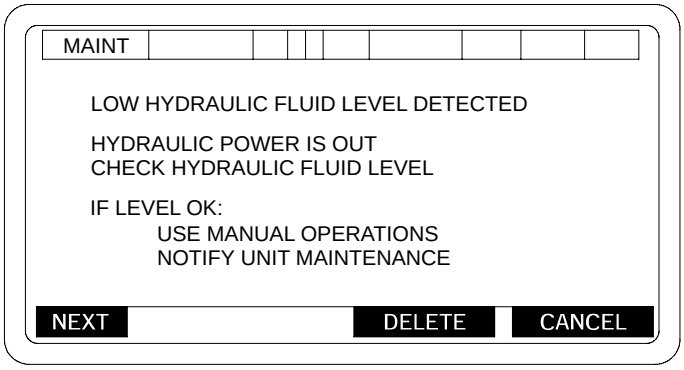


hipc4154

# L-9 AFCS AND PDIU FAULT DETECTION - CONTINUED

## L-9.3 PDIU System Test - Continued

RECONFIGURATION ADVICE offers you the opportunity to get more information on what Backup Modes of Operation are available for subsystems that are not operational. This information is displayed for each warning message sent to the DCU during Normal Operations. RECONFIGURATION ADVICE can take several screens to display as each warning message/advisory information is displayed on a separate screen. You can cycle through and delete the messages as desired.

If you press NEXT, the next warning message and its advisory information will be displayed. If you press DELETE, the warning message and its advisory information displayed will be deleted and the next warning message will appear.

Throughout RECONFIGURATION ADVICE, the CANCEL softkey is available to you. If you press CANCEL, you will exit from RECONFIGURATION ADVICE and the PDIU SYSTEM TEST MENU will be displayed again.

After all messages have been viewed, the following display will appear:

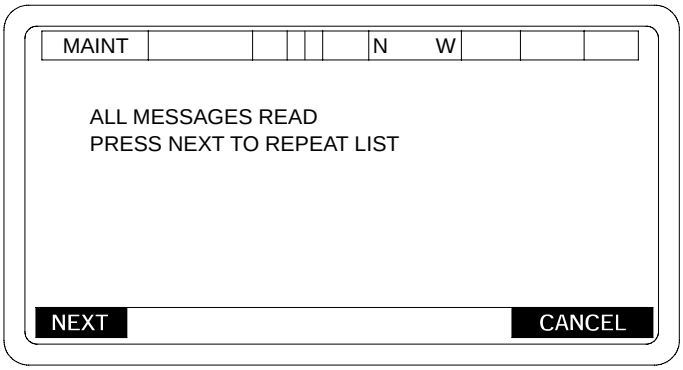


hipc4155

You can press NEXT to cycle through all the messages which were not deleted. Or press CANCEL to exit.

When the last message is displayed and there are no more messages to view, a display like the following will appear:

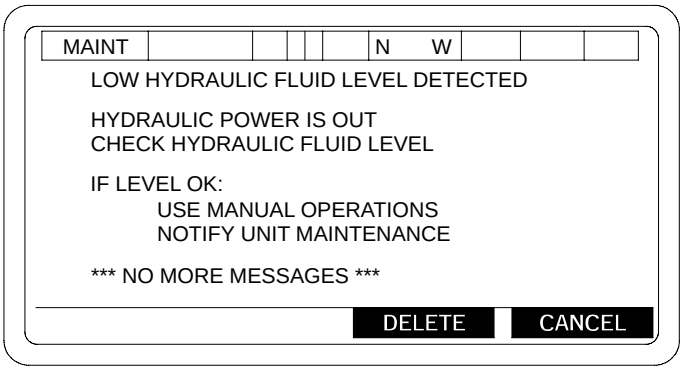


hipc4156

If you press DELETE, the warning message and its advisory information will be deleted and the PDIU SYSTEM TEST MENU will be displayed again.

# L-9 AFCS AND PDIU FAULT DETECTION - CONTINUED

## L-9.3 PDIU System Test - Continued

MAINTENANCE MODE SELECT MENU

To exit from PDIU SYSTEM TEST, press the D softkey.

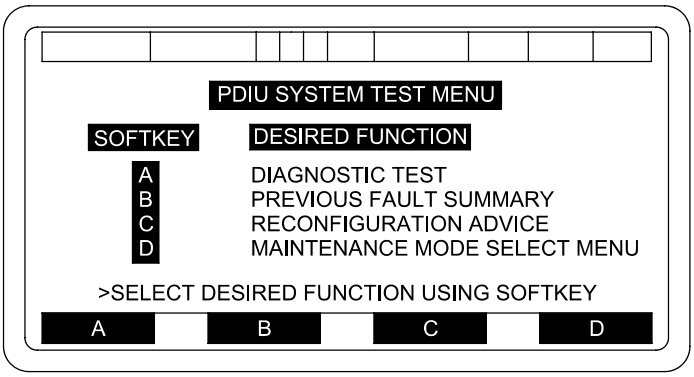


06pc527mc

Pressing D will terminate PDIU SYSTEM TEST and the MAINTENANCE MODE SELECT menu screen will appear. The PDIU will automatically enter into its Background Monitoring Mode.

PDIU SYSTEM TEST MENU VARIATIONS

The following screens show all of the different menus that can be displayed when entering the PDIU SYSTEM TEST. As mentioned above, all options are not always available. An option will not be displayed if its function cannot be performed.

In the following screen, all options are available to the user.

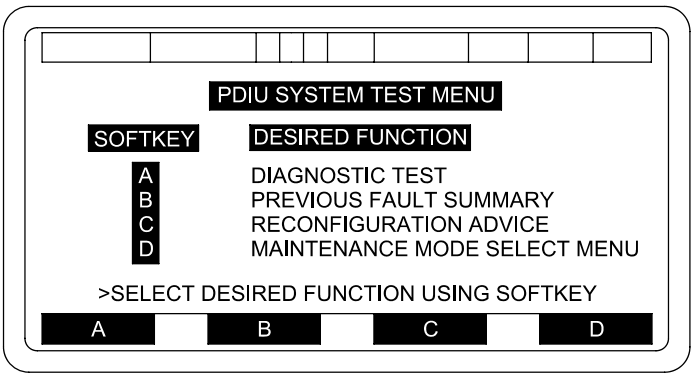


06pc527mc

# L-9 AFCS AND PDIU FAULT DETECTION - CONTINUED

## L-9.3 PDIU System Test - Continued

The RECONFIGURATION ADVICE option is missing from the following menu screen. RECONFIGURATION ADVICE will only be available for warning messages sent to the DCU during Normal Operations and for certain faults detected by the AFCS.

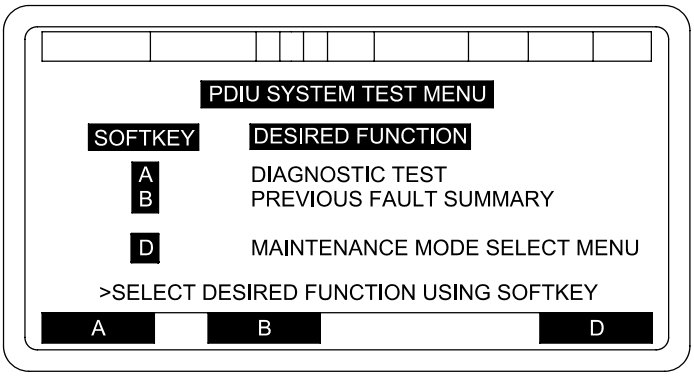


06pc542mc

The PREVIOUS FAULT SUMMARY option is missing from the following menu screen. A PREVIOUS FAULT SUMMARY will only be available if the last DIAGNOSTIC TEST performed was aborted while in progress and faults had been detected or if the last DIAGNOSTIC TEST was completed.

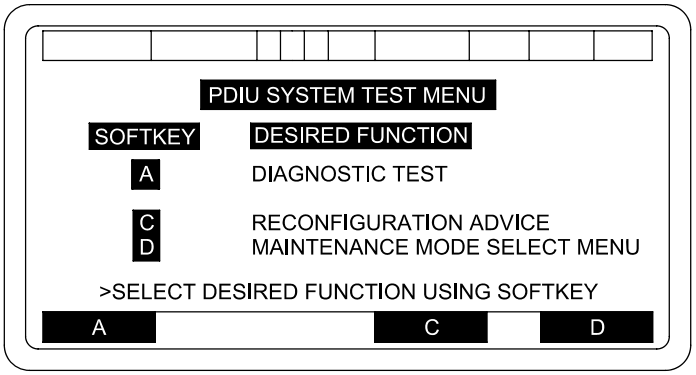


06pc543mc

# L-9 AFCS AND PDIU FAULT DETECTION - CONTINUED

## L-9.3 PDIU System Test - Continued

Both the PREVIOUS FAULT SUMMARY and RECONFIGURATION ADVICE options are missing from the following menu screen. Neither of these options can be performed. DIAGNOSTIC TEST and MAINTENANCE MODE SELECT MENU options will always be available.

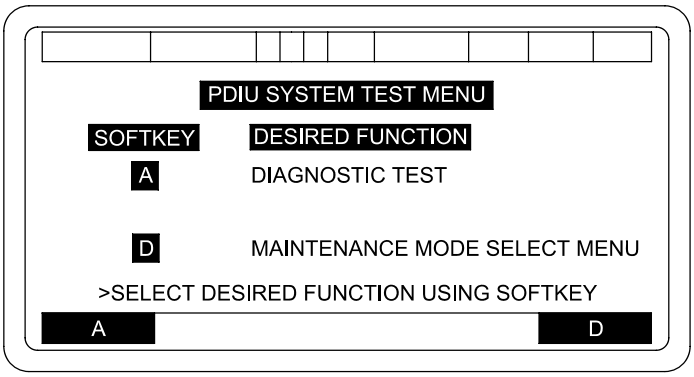


06pc546mc

DIAGNOSTIC TEST is the way you perform all diagnostic testing.

MAINTENANCE MODE SELECT MENU is the way you end PDIU system testing and return to AFCS operations.

# L-9 AFCS AND PDIU FAULT DETECTION - CONTINUED

## L-9.4 Weapon Control Test.

This test checks the elevation and azimuth tachometers which control the speed of the gun tube and cab movement during automatic positioning; LOAD, LAY and STOW.

This test SHOULD NOT be performed in accordance with the standard vehicle setup condition. Vehicle setup conditions for THIS test are:

a. Park vehicle with transmission in neutral, engine running.

b. Set parking brakes.

c. Remove gun tube from travel lock and place travel lock in lower/unlock position.

d. Unlock cab traverse lock.

e. Set DCU POWER switch to ON.

f. Place hydraulic control box POWER switch to ON.

g. Set GUN SERVO switch to ON.

This test will be used when directed by troubleshooting procedures, or when the tachometers appear to malfunction.

If test results indicate tachometer malfunctions, notify unit maintenance personnel for corrective actions.

Elevating gun tube will cause numbers to appear/change (as CHIEF OF SECTION control handles are elevated) in EL TACH box. If numbers do not change/move, your TACH is not working.

Select WEAPON CONTROL TEST from MAINTENANCE MODE SELECT menu.

The first menu to be displayed will be the WEAPON CONTROL INSTRUCTIONS menu and may contain two pages of instructions. The second display will be the WEAPON CONTROL TEST BEGIN menu followed by several WEAPON CONTROL TEST menus.

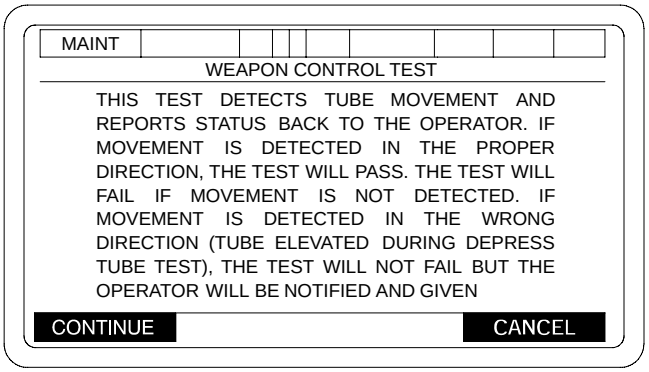


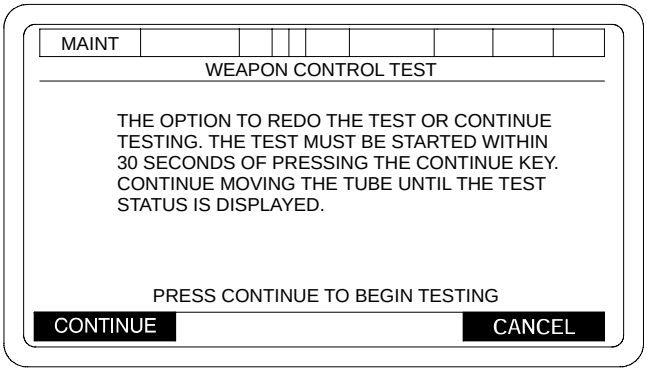


06pc131t

# L-9 AFCS AND PDIU FAULT DETECTION - CONTINUED

## L-9.4 Weapon Control Test - Continued

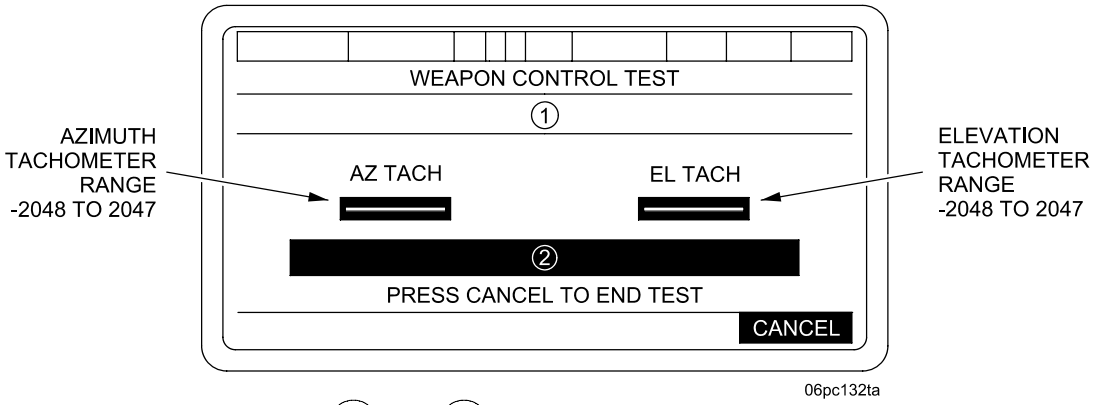


For Messages displayed in Fields (1) and (2) during the WEAPON CONTROL TEST see Table L-3.

| | | |
|---|---|---|
| | CONTINUED: | Go to next text phase |
| (3) | REDO: | Rerun the current test phase |
| | CANCEL: | End the test |

Elevating gun tube will cause numbers to appear/change (as CHIEF OF SECTION control handles are elevated) in EL TACH box. If numbers do not change/move, your TACH is not working.

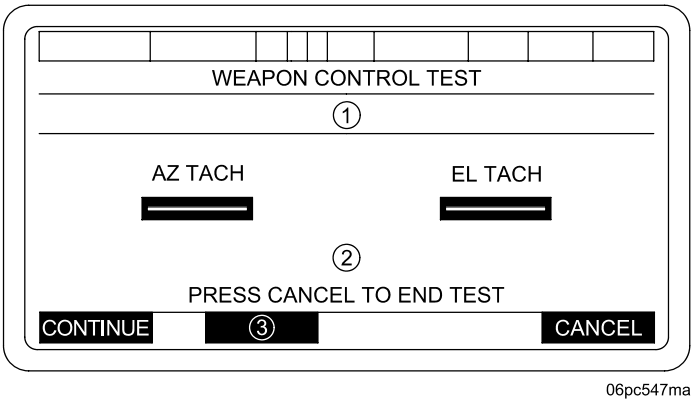

# L-9 AFCS AND PDIU FAULT DETECTION - CONTINUED

## L-9.4 Weapon Control Test - Continued

Depressing gun tube will cause numbers to appear/change (as CHIEF OF SECTION control handles are depressed) in EL TACH box. If numbers do not change/move, your TACH is not working.

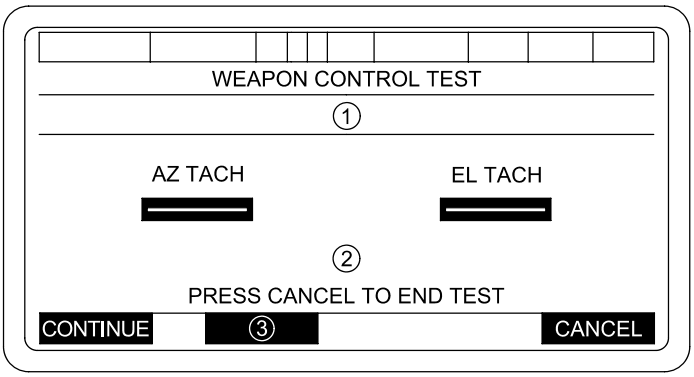


06pc547ma

Traversing gun tube to right will cause numbers to appear/change (as CHIEF OF SECTION control handles are rotated to right) in AZ TACH box. If numbers do not change/move, your TACH is not working.

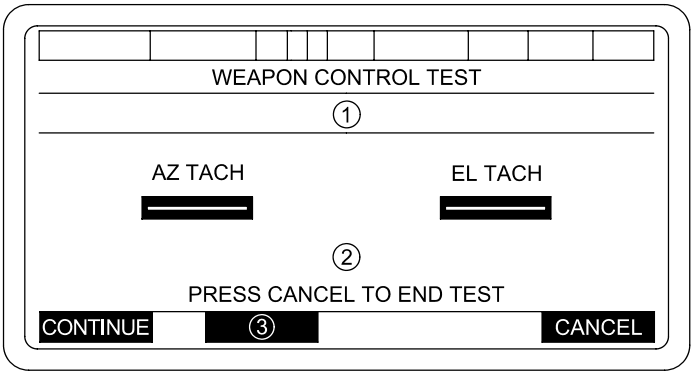


06pc547ma

Traversing gun tube to left will cause numbers to appear/change (as CHIEF OF SECTION control handles are rotated to left) in AZ TACH box. If numbers do not change/move, your TACH is not working.

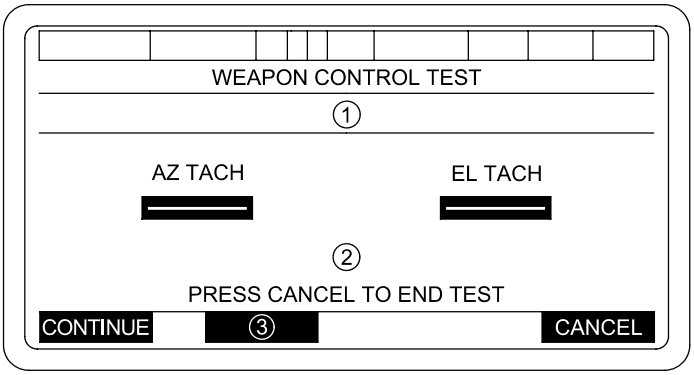


06pc547ma

# L-9 AFCS AND PDIU FAULT DETECTION - CONTINUED

## L-9.4 Weapon Control Test - Continued

The following table describes the messages to be displayed in Fields 1 and 2 during the Weapon Control Test.

### Table L-3 Weapon Control Test Messages

| TEST PHASE | 1 | 2 | 3 |
|---|---|---|---|
| 1 | “ELEVATE TUBE TEST” | “ERROR IN TUBE MOVEMENT SELECT CONTINUE, REDO, OR CANCEL” | “REDO” |
| 1 | “ELEVATE TUBE TEST” | “TEST FAILED - PRESS REDO TO RE-RUN OR CONTINUE FOR NEXT TEST PHASE” | “REDO” |
| 1 | “ELEVATE TUBE TEST” | “TEST PASSED PRESS CONTINUE FOR NEXT TEST PHASE” | BLANK |
| 2 | “DEPRESS TUBE TEST” | “ERROR IN TUBE MOVEMENT SELECT CONTINUE, REDO, OR CANCEL” | “REDO” |
| 2 | “DEPRESS TUBE TEST” | “TEST FAILED - PRESS REDO TO RE-RUN OR CONTINUE FOR NEXT TEST PHASE” | “REDO” |
| 2 | “DEPRESS TUBE TEST” | “TEST PASSED - PRESS CONTINUE FOR NEXT TEST PHASE” | BLANK |
| 3 | “TRAVERSE TUBE LEFT TEST” | “TEST PASSED PRESS CONTINUE FOR NEXT TEST PHASE” | BLANK |
| 3 | “TRAVERSE TUBE LEFT TEST” | “ERROR IN TUBE MOVEMENT SELECT CONTINUE, REDO, OR CANCEL” | “REDO” |
| 3 | “TRAVERSE TUBE LEFT TEST” | “TEST FAILED - PRESS REDO TO RE-RUN OR CONTINUE FOR NEXT TEST PHASE” | “REDO” |
| 4 | “TRAVERSE TUBE RIGHT TEST” | “ERROR IN TUBE MOVEMENT SELECT CONTINUE, REDO, OR CANCEL” | “REDO” |
| 4 | “TRAVERSE TUBE RIGHT TEST” | “TEST FAILED - PRESS REDO TO RE-RUN OR CONTINUE TO REPEAT TEST” | “REDO” |
| 4 | “TRAVERSE TUBE RIGHT TEST” | “TEST PASSED PRESS CONTINUE TO REPEAT TEST” | BLANK |
| 1, 2, 3, or 4 | | “TUBE MOVEMENT DETECTED WAS IN ERROR” | “SELECT PASS, FAIL, OR REDO” |

# L-9 AFCS AND PDIU FAULT DETECTION - CONTINUED

## L-9.5 Vehicle Motion Sensor Test.

This test is designed to check Vehicle Positioning System. The VMS provides signals to the AFCS that aid in the location and positioning of vehicle (coordinates).

This test SHOULD be performed under standard vehicle setup conditions (para L-9.3). This test is used whenever directed by troubleshooting procedures, or when NAV DEGRADED is displayed on the DU and you get ZUPT requests after about 4 minutes of travel.

If test results indicate that VMS is not properly functioning, notify unit maintenance personnel for corrective action.

a. Select VMS TEST from MAINTENANCE MODE SELECT menu.

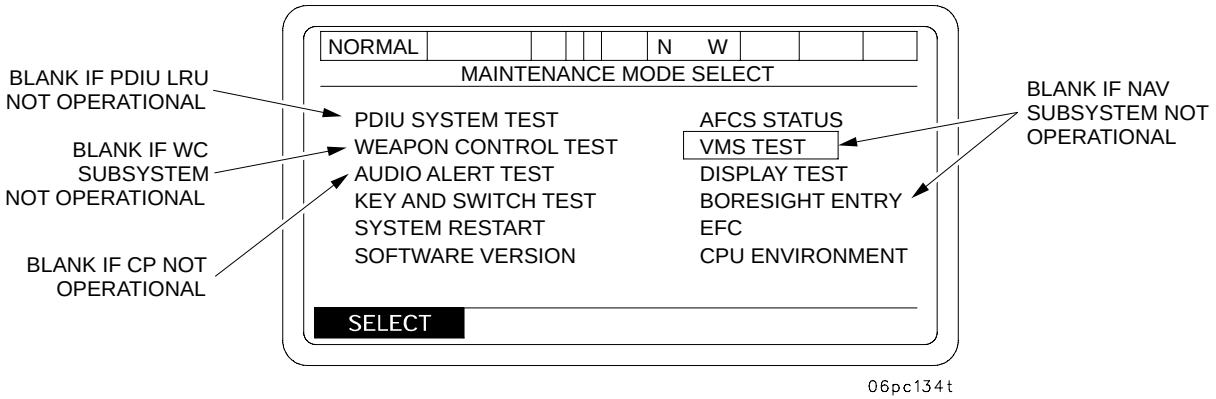

# L-9 AFCS AND PDIU FAULT DETECTION - CONTINUED

## L-9.5 Vehicle Motion Sensor Test - Continued

This test is run automatically.

b. Depressing soft key under CANCEL will end test and take you back to MAINTENANCE MODE SELECT menu.

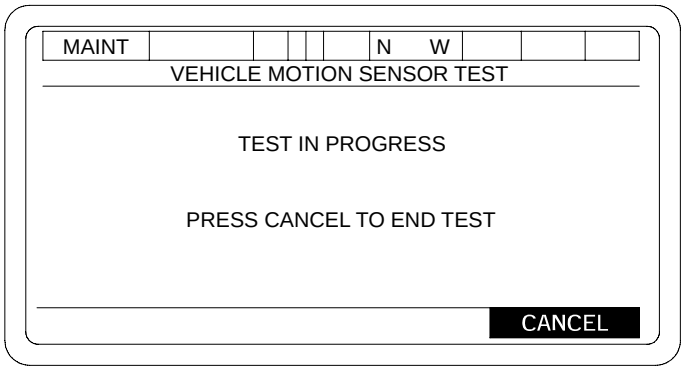


hipc4167

If test results indicate a fault, determine if this degraded mode is acceptable. If not, notify unit maintenance.

Test results can show any of the following:

RESULT -- VMS GOOD

RESULT -- VMS BAD

RESULT -- CAB SIDE VMS MODEM BAD

RESULT -- CHASSIS SIDE VMS MODEM BAD

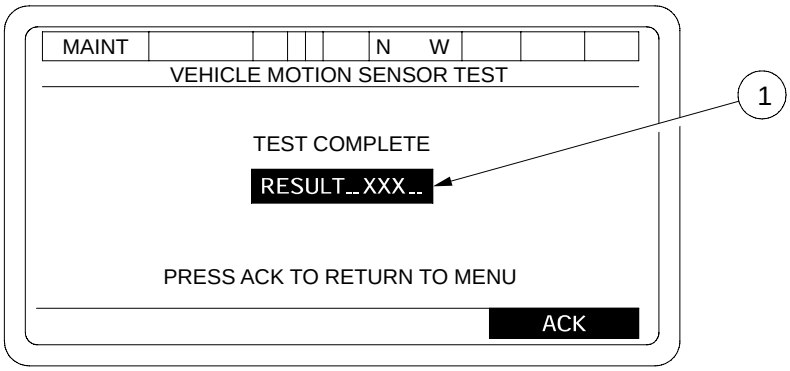


hipc4168

1 VMS GOOD
OR
CHASSIS SIDE VMS MODEM BAD
OR
CAB SIDE VMS MODEM BAD
OR
VMS BAD

c. When test is ended, depress soft key under ACK. This will take you back to MAINTENANCE MODE SELECT menu.

# L-9 AFCS AND PDIU FAULT DETECTION - CONTINUED

## L-9.6 Audio Alert Test.

This test checks the AFCS communications system fire mission alert notification. During this test, all crewmember's intercom control boxes should emit a repeating tone for 5 seconds. Checks of CVC helmets and intercoms should be performed.

This test should be performed under the standard vehicle setup conditions.

This test is used when directed by troubleshooting procedures, or if testing intercom/CVC is desirable.

a. Select AUDIO ALERT TEST from MAINTENANCE MODE SELECT menu. Press SELECT KEY. AUDIO ALERT TEST is displayed.

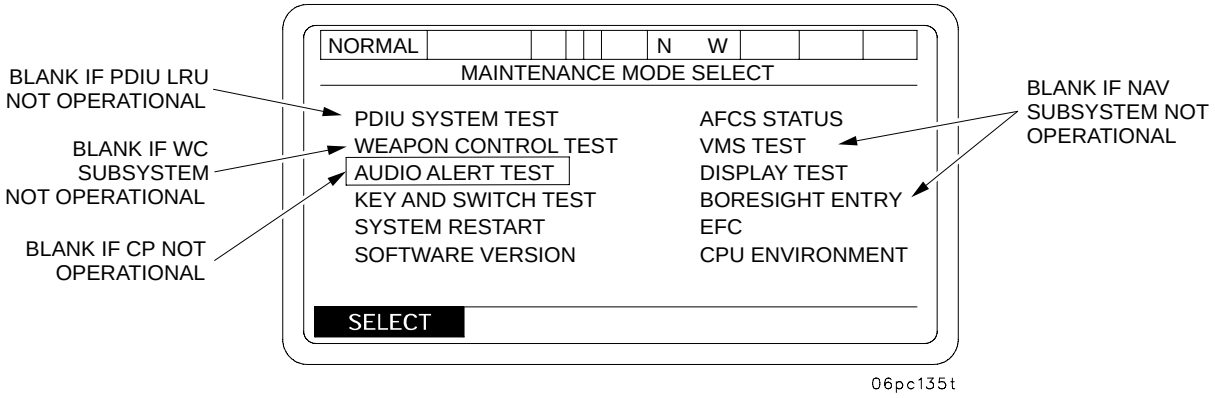


b. Depressing soft key under CANCEL will take you back to MAINTENANCE MODE SELECT menu.

c. Depressing soft key under CONTINUE will start your AUDIO ALERT TEST.

d. When your AUDIO ALERT TEST is completed, you may depress soft key under CONTINUE to repeat test.

e. When test is completed, depress soft key under CANCEL to return to MAINTENANCE MODE SELECT menu.

f. If there is fault with your intercom/AFCS, notify unit maintenance.

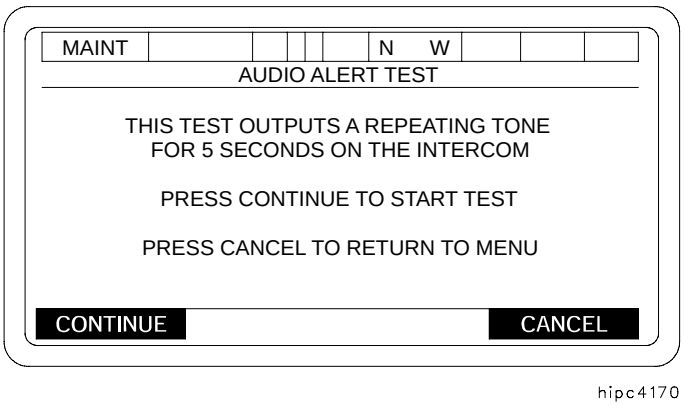

# L-9 AFCS AND PDIU FAULT DETECTION - CONTINUED

## L-9.7 Display Test.

This test checks the uniform color contrast in the screen on the display unit. Information appearing on the screen may become too light to read.

This test should be performed under standard vehicle setup condition (para L-9.3).

This test will be used when directed by troubleshooting procedures, or if testing of DCU screen is desirable.

a. Select DISPLAY TEST from MAINTENANCE MODE SELECT menu. Press SELECT key.

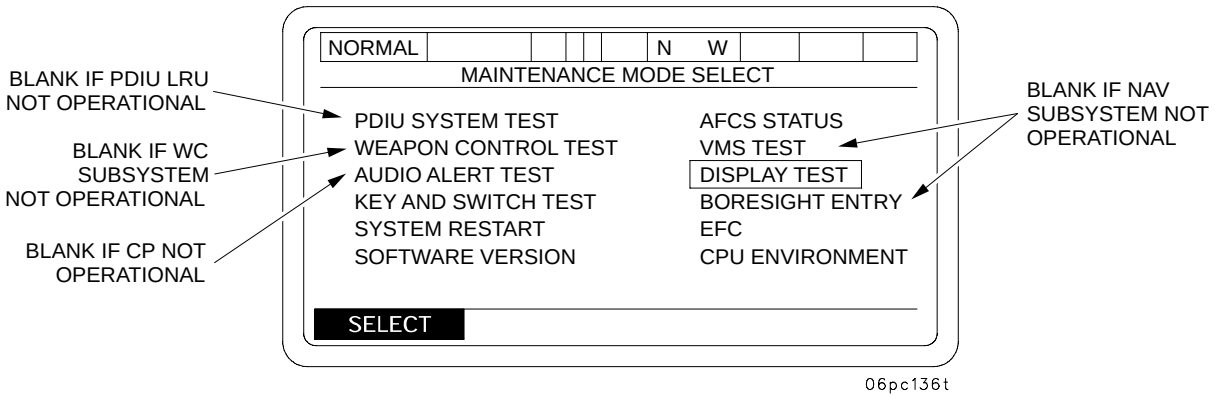


b. Your display (EL PANEL) will become highlighted for 2 seconds. After 2 seconds, your EL PANEL will return to normal. You may reselect DISPLAY TEST if required.

c. If there are some spots on your EL PANEL that did not light up, determine if this degraded mode is acceptable. If this is not acceptable, notify unit maintenance.

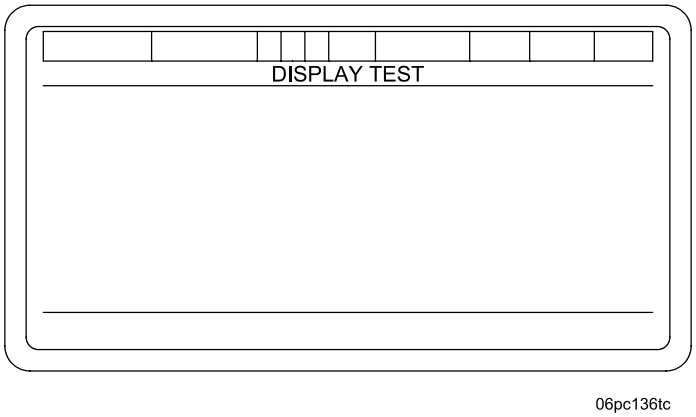

# L-9 AFCS AND PDIU FAULT DETECTION - CONTINUED

## L-9.8 Key and Switch Test.

**NOTE**

AFCS must be powered up at least 5 minutes prior to performing this test.

This test checks the response of each key and toggle switch on the display panel. The key marked T is for the embedded trainer switch and the key marked S is the GUN SERVO switch. Ensure that NOTES are observed when conducting this test.

This test should be performed under the standard vehicle setup condition (para L-9.3).

This test will be used, when directed by troubleshooting procedures, or if malfunctions of keypad and switches are apparent.

Select KEY AND SWITCH TEST from MAINTENANCE MODE SELECT menu. Press SELECT key.

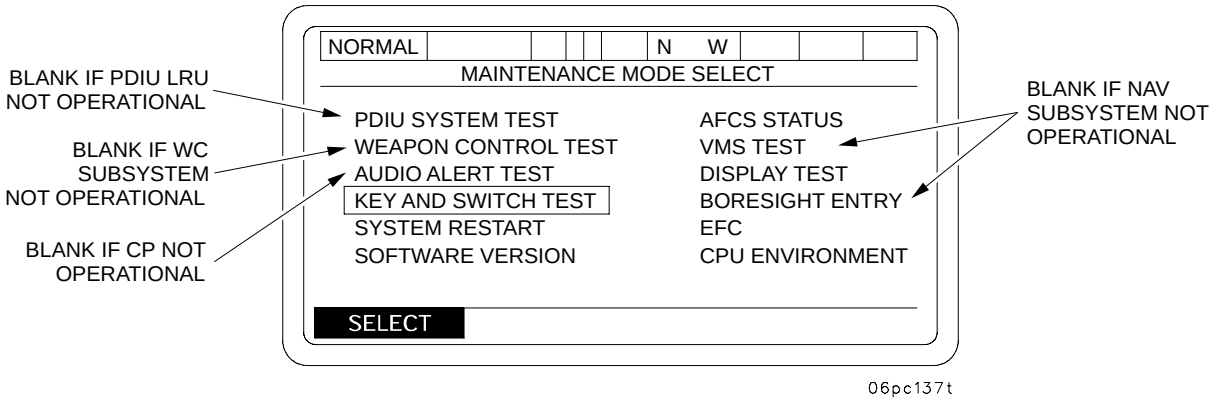


**NOTE**

- Test ends when F1 (soft key) is depressed. Make sure you depress F1 soft key last while performing this test.
- Do not place DU POWER switch to OFF during this test.

a. Depress each key in turn (including arrow keys, soft keys, LOAD, LAY, and STOW keys) and place both switches shown to ON/OFF for testing. As each key is depressed, it will be highlighted.

b. As each switch/toggle is moved, it will move up or down on your EL PANEL.

c. If fault is indicated with your keypad, switches, soft keys, arrow keys, LOAD, LAY, or STOW keys, notify unit maintenance.

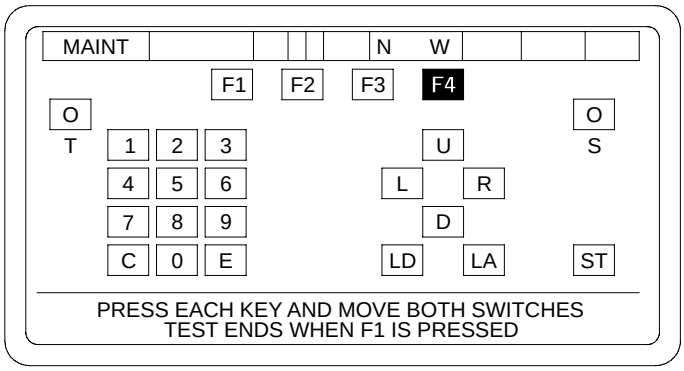

# L-9 AFCS AND PDIU FAULT DETECTION - CONTINUED

## L-9.9 Boresight Angle Entry.

This test is designed for use by unit maintenance personnel only. Operators must not use this selection.

**WARNING**

This selection will be used by unit maintenance personnel to input correction to NAV SUBSYSTEM boresight. Entry of improper data into boresight angle entry menu can cause gun to be laid incorrectly. This could result in injury or death to personnel down range.

**NOTE**

If you accidently enter this mode, you must exit immediately by pressing the CANCEL key.

## L-9.10 Equivalent Full Charge (EFC).

EFC data is maintained by the AFCS. It consists of a cumulative set which contains the total number of rounds fired by the gun using legal charge and the accumulated EFC based on the total number of rounds fired. The AFCS saves the data in the non-volatile memory during normal AFCS power down sequencing.

The calculation of EFC is done automatically for POC/FDC directed fire missions when the operator presses the soft key under the VERIFIED prompt on the VERIFY EXPENDED AMMO menu. However, should the operator not be able to VERIFY that the specified ammunition has been fired, or fire missions have been fired with data supply by voice radios, or direct fire missions have occurred, then the operator will be required to update the AFCS Ammunition Inventory and the EFC.

To update the EFC, access the SETUP AND INFORMATION menu, place the cursor on MAINTENANCE and press soft key under SELECT prompt. The MAINTENANCE MODE SELECT menu will appear. Place cursor on EFC and press soft key under SELECT prompt. The EQUIVALENT FULL CHARGE Menu will be displayed.

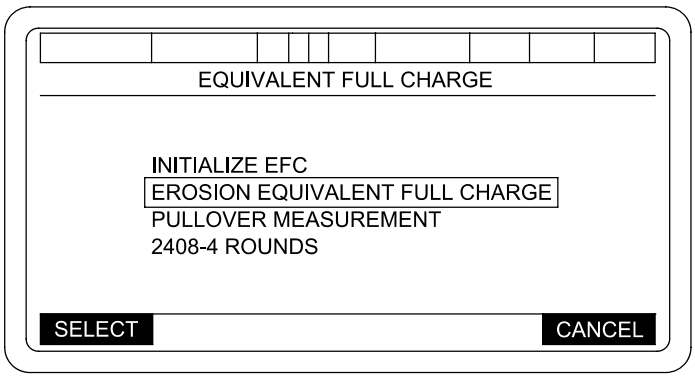


06pc281t

Each of the four functions will now be described separately.

# L-9 AFCS AND PDIU FAULT DETECTION - CONTINUED

## L-9.10 Equivalent Full Charge (EFC) - Continued

L-9.10.1 Initialize EFC.

This function is used to initialize EFC data in the event a new cannon tube is placed on the vehicle.

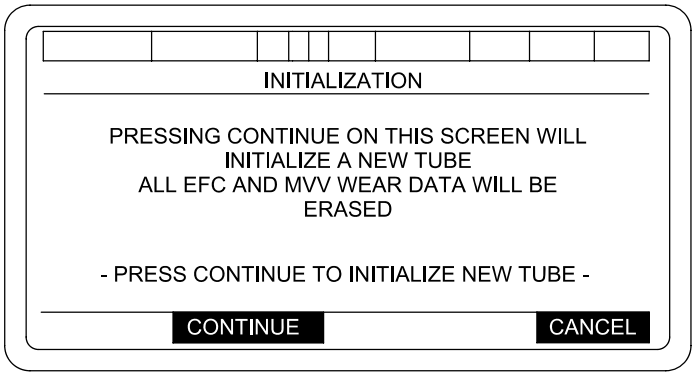


06pc281ta

If you press “CONTINUE”, the AFCS shall display the operator prompt “ARE YOU SURE?” “YES” “NO”.

If “YES” is pressed, the following actions occur automatically and the display will return to the EQUIVALENT FULL CHARGE menu:

Pullover Gauge Measurement is reset to 6.100 (This also causes EFC Erosion to reset to Zero)
MVV Wear Database is reset to Zero
2408-4 Rounds Information is reset to Zero

If “NO” is pressed, the display will return to the EQUIVALENT FULL CHARGE menu.

L-9.10.2 Erosion Equivalent Full Charge.

This function is used to view the Current EFC Erosion Count of the weapon.

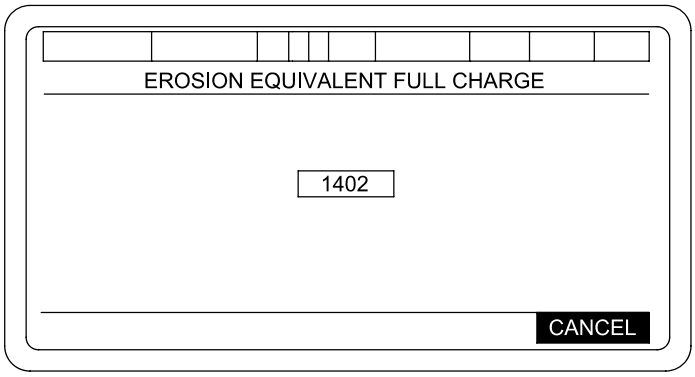


06pc282t

When the “CANCEL” soft key is pressed, the display shall return to the EQUIVALENT FULL CHARGE menu.

# L-9 AFCS AND PDIU FAULT DETECTION - CONTINUED

## L-9.10 Equivalent Full Charge (EFC) - Continued

L-9.10.3 Pullover Measurement.

This function is used to view the Current Pullover Gauge Measurement or input a new Pullover Gauge Measurement.

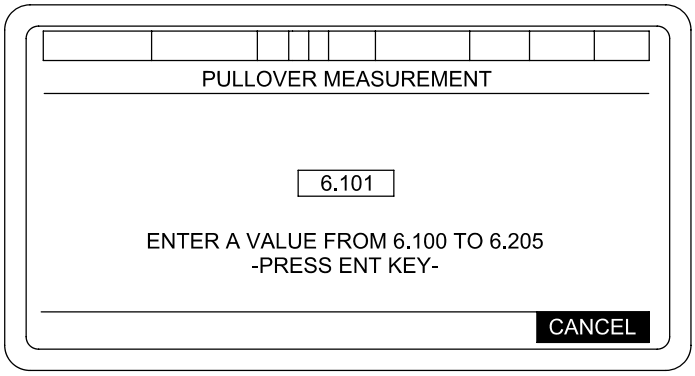


06pc282ta

The operator shall only be allowed to enter a Pullover Measurement of 6.100 to 6.205. If the operator enters a value less than 6.100 or greater than 6.205, the AFCS shall display the operator warning “VALUE TOO BIG” “ACK” or “VALUE TOO SMALL” “ACK”. When the “ACK” soft key is pressed, the display shall return to the previously stored value.

When the ENTER key is pressed, the AFCS shall display the operator prompt “ARE YOU SURE?” “YES” “NO”.

If “YES” is pressed, then the AFCS shall convert the Pullover Gauge Measurement into the equivalent EFC Erosion count and update the EFC Erosion count in the MVV Wear Database. The display will then return to the EQUIVALENT FULL CHARGE menu.

If “NO” is pressed, the screen will return to the previously stored values for reentry of data.

L-9.10.4 2408-4 Rounds.

This screen allows four separate and distinct functions:

The first allows update of Total Rounds (which shall not affect EFC Erosion) to match the Manual 2408-4. The second permits entry of rounds fired during a period in which the AFCS was inoperable. The third allows adjustment of rounds entered during Verification o or “Other” missions not actually fired. The fourth function allows initialization of a new ACU. When coupled with Pullover Gauge, 2408-4 TOT RNDS PRIOR TO PULLOVER GAUGE, AND “+/- RNDS”, the last known EFC Erosion can be duplicated.

# L-9 AFCS AND PDIU FAULT DETECTION - CONTINUED

## L-9.10 Equivalent Full Charge (EFC) - Continued

L-9.10.4 2408-4 Rounds - Continued

**NOTE**

To maintain accuracy and consistency, the AFCS database must be restored exactly as it was at the time the AFCS became inoperable.

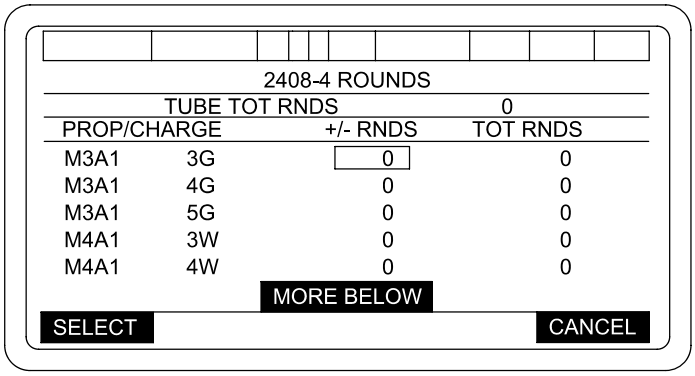


06pc283t

**NOTE**

Scrolling shall be enabled, with “MORE BELOW” and “MORE ABOVE” appearing as appropriate.

When +/- RNDS is highlighted and the “SELECT” soft key is pressed, the following will be displayed:

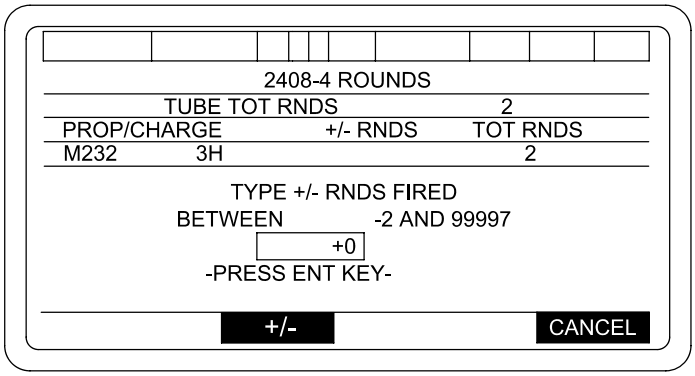


06pc283ta

# L-9 AFCS AND PDIU FAULT DETECTION - CONTINUED

## L-9.10 Equivalent Full Charge (EFC) - Continued

L-9.10.4 2408-4 Rounds - Continued

When TOT RNDS is highlighted and the “SELECT” soft key is pressed, the following will be displayed:

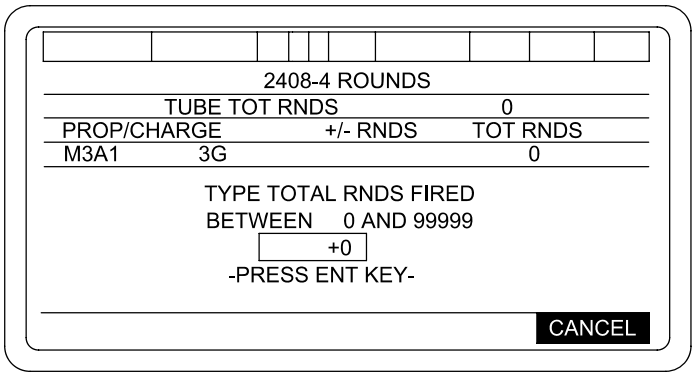


06pc284t

Input new value and press “ENTER” to accept value. when “ENTER” has been pressed, the display will return to the 2408-4 ROUNDS screen. An “UPDATE” soft key will display in the FKY-2 position. when “UPDATE” is pressed, the following actions occur:

The TOT RNDS column is updated for the selected PROP/CHG
TUBE TOT RNDS is updated
Of +/- RNDS input, EFC Erosion is updated in the MVV Wear Database

# L-9 AFCS AND PDIU FAULT DETECTION - CONTINUED

## L-9.11 AFCS and PDIU Abbreviations.

| ABBREVIATION | NAME |
|---|---|
| ACU | AFCS COMPUTER UNIT |
| AFCS | AUTOMATIC FIRE CONTROL SYSTEM |
| AOF | AZIMUTH OF FIRE |
| AZ | AZIMUTH |
| AUXA | EXTERNAL BATTERY-A |
| AUXB | EXTERNAL BATTERY-B |
| AZ/EL TACHS | AZIMUTH AND ELEVATION TACHOMETERS |
| AZTACH | AZIMUTH TACHOMETER |
| BATT | BATTERY |
| BB2 | BRUSH BLOCK #2 |
| BB6 | BRUSH BLOCK #6 |
| BB7 | BRUSH BLOCK #7 |
| BCS | BATTERY COMPUTER SYSTEM |
| BC | BALLISTIC COMPUTATION |
| BIT | BUILT IN TEST |
| BPSL | BYPASS SOLENOID |
| BPV | BYPASS VALVE |
| CBLS | CABLES |
| CDP | CONDITION DIPOLE |
| CHKFIRE | CHECK FIRE |
| CFN | COOLING FAN |
| CLCS | CLUTCH SOLENOID |
| CLV | CLUTCH VALVE |
| COMMO | COMMUNICATION |
| COS | CHIEF OF SECTION |
| COSCH | CHIEF OF SECTION CONTROL HANDLE |
| COSCH VLF | CHIEF OF SECTION CONTROL HANDLE VELOCITY FUSE |
| CP | COMMUNICATIONS PROCESSING |
| CPCI | COMPUTER PROGRAM CONFIGURATION ITEM |
| CRSH | CURRENT SHUNT |
| CTRL | CONTROL |
| CTSW | COOLING TEMPERATURE SWITCH |
| DU | DISPLAY UNIT |
| DRU | DYNAMIC REFERENCE UNIT |
| EL | ELEVATION |
| ELHP | ELEVATION HANDPUMP |
| ELSL | ELEVATION SELECT SOLENOID |
| ELSV | ELEVATION SERVO VALVE |

# L-9 AFCS AND PDIU FAULT DETECTION - CONTINUED

## L-9.11 AFCS and PDIU Abbreviations - Continued

| ABBREVIATION | NAME |
|---|---|
| ELTACH | ELEVATION TACHOMETER |
| ELTRUN | ELEVATION TRUNNION |
| ELV | ELEVATION SELECT VALVE |
| EQ | EQUILIBRATION |
| EQA | EQUILIBRATION ASSEMBLY |
| EQACC | EQUILIBRATION ACCUMULATOR |
| EQHP | EQUILIBRATOR HANDPUMP |
| EQMANIFOLD | EQUILIBRATION MANIFOLD |
| EQ CHARGE VALVE | EQUILIBRATOR CHARGE VALVE |
| FIL | FILTER |
| FILA | FILTER ASSEMBLY |
| FIREMSN | FIRE MISSION |
| FLOM | FLOWMETER |
| FLU | FLUID |
| FLUSN | FLUID LEVEL SENSOR |
| GCH | GUNNER'S CONTROL HANDLE |
| GNR | GUNNER |
| GPS | GLOBAL POSITIONING SYSTEM |
| HCB | HYDRAULIC CONTROL BOX |
| HPUMP | HANDPUMP |
| HYD | HYDRAULIC |
| HYM | HYDRAULIC PUMP ELECTRIC MOTOR |
| HYP | HYDRAULIC PUMP |
| HYPR | HYDRAULIC POWER RELAY |
| MO | MOVE ORDER |
| MSL | MODE SELECT SOLENOID |
| MSV | MODE SELECT VALVE |
| MVS | MUZZLE VELOCITY SENSOR |
| NAV | NAVIGATION |
| NA | NAV ASSIST |
| NRZ | NON-RETURN TO ZERO |
| OLSN | OVERLOAD SENSOR |
| PCU | POWER CONDITIONER UNIT |
| PDIU | PROGNOSTIC DIAGNOSTIC INTERFACE UNIT |
| PLGR | PRECISION LIGHTWEIGHT GPS RECEIVER |
| PRESS | PRESSURE |
| PWR | POWER |

# L-9 AFCS AND PDIU FAULT DETECTION - CONTINUED

## L-9.11 AFCS and PDIU Abbreviations - Continued

| ABBREVIATION | NAME |
|---|---|
| PXDCR | PRESSURE TRANSDUCER |
| REFIL | RETURN FILTER |
| RR | RADIO RACK |
| SFIL | SUPPLY FILTER |
| SH | SHUNT |
| SL | SOLENOID |
| SN | SENSOR |
| SR | SLIP RING |
| SV | SERVO |
| SW | SWITCH |
| SYS | SYSTEM |
| TEMP | TEMPERATURE |
| TF XXI | TASK FORCE TWENTY-ONE |
| TRAV | TRAVERSE |
| TRAV GEAR | TRAVERSING GEAR |
| TRDM | TRAVERSE DRIVE MECHANISM |
| TRLSL | TRAVERSE LIMIT SOLENOID |
| TRLSW | TRAVERSE LIMIT SWITCH |
| TRLV | TRAVERSE LIMIT VALVE |
| TRSL | TRAVERSE SELECT SOLENOID |
| TRSV | TRAVERSE SERVO VALVE |
| TRV | TRAVERSE SELECT VALVE |
| TSN | TEMPERATURE SENSOR |
| TTCBL | TUBE TEMPERATURE SENSOR GFE CABLE |
| TTTSN | TUBE TEMPERATURE SENSOR |
| TXDCR | TEMPERATURE TRANSDUCER |
| VMS | VEHICLE MOTION SENSOR |
| VMSC | VEHICLE MOTION SENSOR MODEM-CAB |
| VMSH | VEHICLE MOTION SENSOR MODEM-HULL |
| VLF | VELOCITY FUSES |
| WC | WEAPONS CONTROLLER |
| WPN | WEAPON |
| WTSL | WARMUP TEMPERATURE SOLENOID |
| WTSW | WARMUP TEMPERATURE SWITCH |
| WTV | WARMUP TEMPERATURE VALVE |

# L-9 AFCS AND PDIU FAULT DETECTION - CONTINUED

## L-9.12 Software Version/Configuration Display.

To view detailed software configuration information for each Computer Program Configuration Item (CPCI) move cursor to “SOFTWARE VERSION” on the MAINTENANCE MODE SELECT menu.

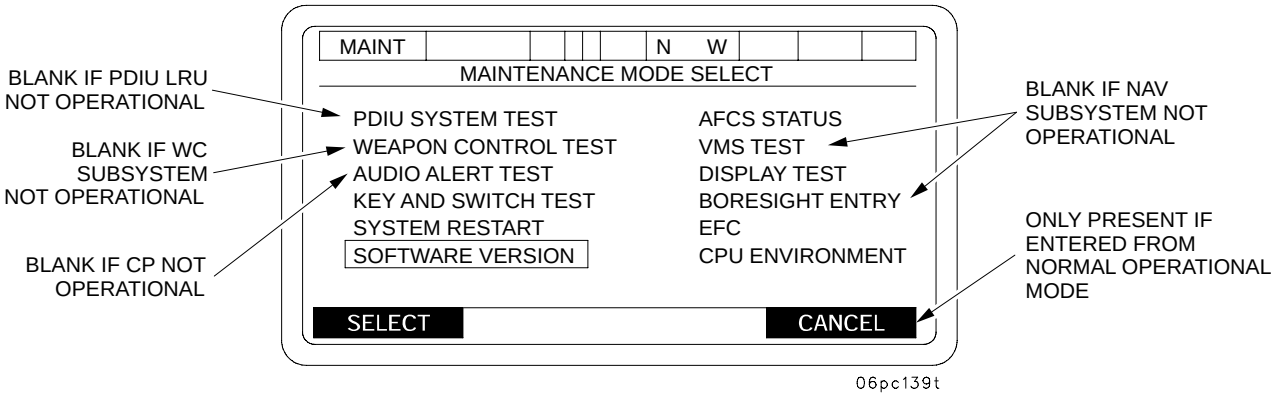


Press soft key label “SELECT” and the SOFTWARE VERSION/CONFIGURATION display as shown below will appear.

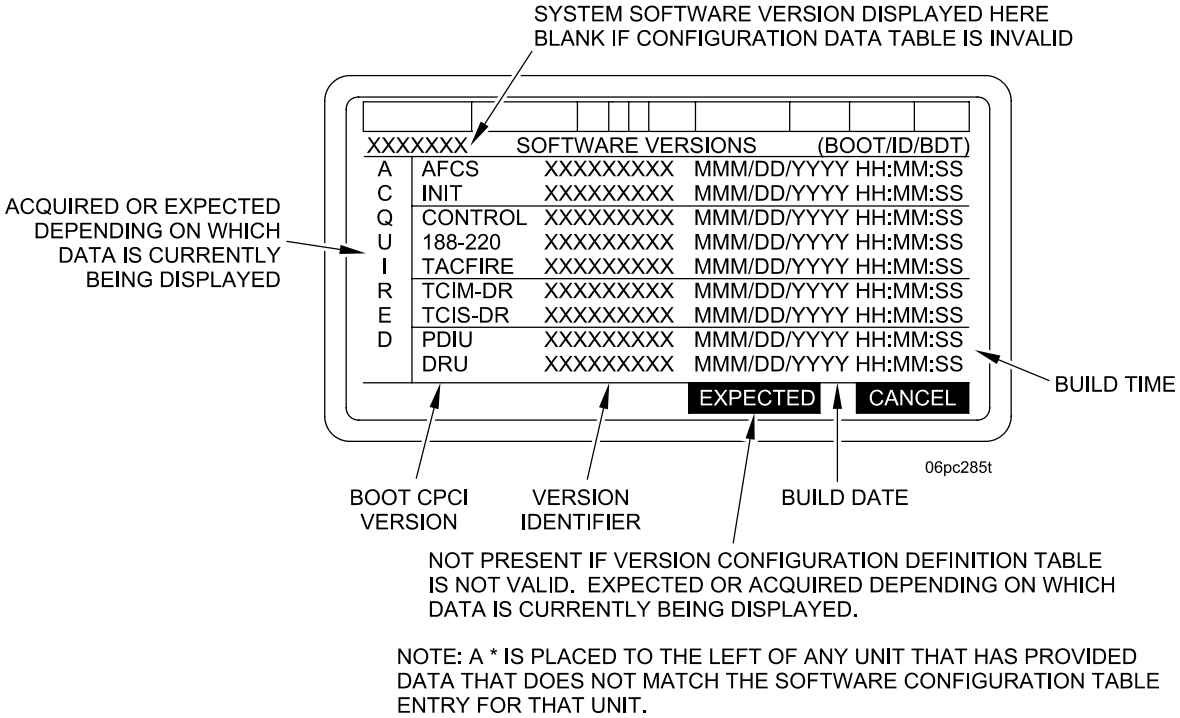


NOTE: A * IS PLACED TO THE LEFT OF ANY UNIT THAT HAS PROVIDED DATA THAT DOES NOT MATCH THE SOFTWARE CONFIGURATION TABLE ENTRY FOR THAT UNIT.

**NOTE**

Information displayed from the DRUH can be interpreted as version configuration data.

# L-9 AFCS AND PDIU FAULT DETECTION - CONTINUED

## L-9.12 Software Version/Configuration Display - Continued

### NOTE

- When a LRU/CPCI other than the DCU is reported with an indirect configuration, then the system will run in a degraded mode and will declare the LRU/CPCI as unavailable.
- Initially, the ACQUIRED information of the display will give the boot loader, system software version and build data for each computer program configuration item that is acceptable to the system software configuration.
- If the CPCI is not acceptable, there will be an asterisk (*) to the left of the CPCI. If the asterisk is present, this will cause the system to operate in the DEGRADED mode unless the asterisk appears next to DCU, then the system will only operate in the Maintenance mode.
- To check which version of software is acceptable, press softkey under EXPECTED.
- If a CPCI is blank, the version of software loaded is acceptable with any system configuration.
- If uploading of software is required, notify Unit Maintenance.

## L-9.13 CPU Environment Display.

This display allows the operator to view System related parameters as follows:

Inputs:

1. Operating System Version (O/S)
2. BIOS Information (Vendor & Version)
3. Elapsed Time Meter (in hours)

The tactical software receives the data listed above from the ACU and presents this information to the operator on the DU. This information is used by maintenance personnel.

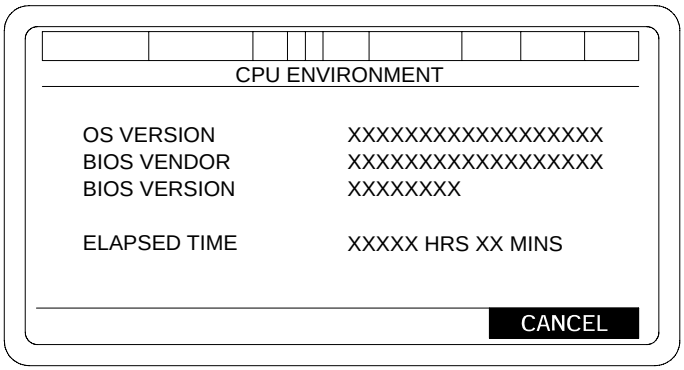


06pc428m

## L-10 SYMPTOM INDEX.

### NOTE

- Before you use this troubleshooting table, be sure you have performed all applicable operating checks in Chapter 2.
- For corrective actions of malfunctions not listed in this table, notify unit maintenance.
- Wherever the word lubricate appears, see Appendix I.

The following symptom index is to assist you in locating the correct troubleshooting procedure quickly.


| AFCS | Troubleshooting Procedure Page |
|---|---|
| AFCS – Software Lockup | L-194 |
| Cab does not traverse freely under AFCS control | L-194 |
| Cab creeps under AFCS control | L-195 |
| Gun tube does not move to LOAD position when LOAD is selected under AFCS control | L-196 |
| Gun tube does not move to STOW position when STOW is selected under AFCS control | L-197 |
| Gun tube does not move to LAY position when LAY is selected under AFCS control | L-198 |
| DU does not power up | L-199 |
| Training mode cannot be selected | L-199 |
| AFCS is not able to receive a mission | L-199 |
| No audible alert for COS or crew (DU power is ON) | L-200 |
| EL Panel messages are garbled/hard to read | L-200 |
| DU soft keys/arrow keys/keypad switches, LOAD, LAY, or STOW keys do not respond properly | L-200 |
| NAV subsystem fault (degraded mode) is indicated | L-200 |
| DU subsystem fault (degraded mode) is indicated | L-201 |
| WPN subsystem fault (degraded mode) is indicated | L-201 |
| PDIU subsystem fault (degraded mode) is indicated | L-201 |
| PCU subsystem fault (degraded mode) is indicated | L-201 |
| MVS subsystem fault (degraded mode) is indicated | L-202 |
| AFCS position drifts/DRUH “OP FAIL” is indicated | L-203 |

## Table L-4 TROUBLESHOOTING

**MALFUNCTION**

**TEST OR INSPECTION**

**CORRECTIVE ACTION**

### AFCS

**WARNING**

Before troubleshooting AFCS gun positioning faults, make sure immediate area around and in the howitzer is clear of nonessential personnel and that no other equipment is within the 360 degree radius of the cab. Before moving gun servo switch to the ON position, announce loudly to everyone in immediate area, “AFCS POWER ON.” Serious injury or death, and/or equipment damage could result.

1. AFCS - SOFTWARE LOCKUP

   Step 1. Place DU POWER switch OFF and wait at least 5 seconds.

   Step 2. Place DU POWER switch ON and restart system. If lockup persists, notify unit maintenance.

2. CAB DOES NOT TRAVERSE FREELY UNDER AFCS CONTROL.

**NOTE**

Verify following: main drive gears and gun tube are unobstructed and main hydraulic pressure is at 1925 psi ± 50 psi.

Step 1. Verify that GUN SERVO light illuminates when LAY button is pressed.

a. If not ON, place gun switch ON.

b. If switch is ON, go to step 2.

Step 2. Check to see if you are in NORMAL OPERATIONS mode.

a. Verify that TRAVERSE mode switch is in the POWER position. Check EL Panel for mode display. Status line will indicate mode.

   If not, enter proper mode.

b. If in NORMAL OPERATIONS mode, check EL Panel fields.

   (1) Verify that LOAD, LAY, or STOW fields are displayed on EL Panel of DU when GUN SERVO SWITCH is on.

   (2) LOAD, LAY, or STOW fields (graphics) are highlighted when displayed.

   Gun is already in proper position.

   (3) LOAD, LAY, or STOW fields (graphics) are displayed in normal form.

   Reselect proper functional key. If cab does not traverse freely, notify unit maintenance. Complete mission in DEGRADED mode.

   (4) LOAD, LAY, or STOW fields are not displayed.

   If fields are not displayed, go to step 3.

Table L-4 TROUBLESHOOTING - Continued

| MALFUNCTION / TEST OR INSPECTION | CORRECTIVE ACTION |
|---|---|

## AFCS - Continued

Step 3. Check DU for fault indication.

a. GUN SERVO indicator not lit during LOAD/LAY/STOW operation.

Run PDIU system test (para L-9.3) and notify unit maintenance. Complete mission in DEGRADED mode.

b. FAULT indicator lit.

Check status line for faulty hardware, run PDIU system test (para L-9.3) and notify unit maintenance. Complete mission in DEGRADED mode.

3. CAB CREEPS UNDER AFCS CONTROL.

Step 1. Verify that GUN SERVO ON/OFF switch is ON.

a. If not ON, place switch ON.

b. If switch is ON, go to step 2.

Step 2. Check to see if you are in NORMAL OPERATIONS mode.

a. Check EL Panel for mode display.

If not in proper mode, enter proper mode.

b. If in NORMAL OPERATIONS mode, check EL Panel fields.

(1) Verify that LOAD, LAY, or STOW fields are displayed on EL Panel of DU.

(2) LOAD, LAY, or STOW fields are highlighted, when displayed.

Gun is already in proper position, cab should not creep. If cab still creeps, notify unit maintenance. Complete mission in DEGRADED mode.

(3) LOAD, LAY, or STOW fields are displayed properly.

Reselect proper functional key. If cab still creeps, notify unit maintenance.

(4) LOAD, LAY, or STOW fields are not displayed.

If fields are not displayed, go to step 3.

Step 3. Check DU for fault indication.

a. GUN SERVO indicator not lit during LOAD/LAY/STOW operation.

Run PDIU system test (para L-9.3) and notify unit maintenance. Complete mission in DEGRADED mode.

b. FAULT indicator lit.

Check status line on EL Panel for faulty hardware, run PDIU system test (para L-9.3), and notify unit maintenance. Complete mission in DEGRADED mode.

Table L-4 TROUBLESHOOTING - Continued

| MALFUNCTION | TEST OR INSPECTION | CORRECTIVE ACTION |
|---|---|---|

## AFCS - Continued

4. GUN TUBE DOES NOT MOVE TO LOAD POSITION WHEN LOAD IS SELECTED UNDER AFCS CONTROL.

Step 1. Verify that GUN SERVO ON/OFF switch is ON.

a. If not ON, place switch ON.

b. If switch is ON, go to step 2.

Step 2. Check to see if you are in NORMAL OPERATIONS mode.

a. Verify that TRAVERSE mode switch is in the POWER position. Check EL Panel for mode display.

If not in proper mode, enter proper mode.

b. If in NORMAL OPERATIONS mode, check EL Panel fields.

(1) Verify that LOAD, LAY or STOW fields are displayed on EL Panel of DU.

(2) LOAD, LAY, or STOW fields are highlighted, when displayed.

Gun is already in proper position.

(3) LOAD, LAY, or STOW fields are displayed properly.

Reselect proper functional key. If gun tube still does not move to LOAD position, notify unit maintenance. Complete mission in DEGRADED mode.

(4) LOAD, LAY, or STOW fields are not displayed.

If fields are not displayed, go to step 3.

Step 3. Check DU for fault indication.

a. GUN SERVO indicator not lit during LOAD/LAY/STOW operation.

Run PDIU system test (para L-9.3) and notify unit maintenance. Complete mission in DEGRADED mode.

b. FAULT indicator lit.

Check status line on EL Panel for faulty hardware, run PDIU system test (para L-9.3), and notify unit maintenance. Complete mission in DEGRADED mode.

Table L-4 TROUBLESHOOTING - Continued

| MALFUNCTION | TEST OR INSPECTION | CORRECTIVE ACTION |
|---|---|---|

## AFCS - Continued

5. GUN TUBE DOES NOT MOVE TO STOW POSITION WHEN STOW IS SELECTED UNDER AFCS CONTROL.

Step 1. Verify that GUN SERVO ON/OFF switch is ON.

a. If not ON, place switch ON.

b. If switch is ON, go to step 2.

Step 2. Check to see if you are in NORMAL OPERATIONS mode.

a. Verify that TRAVERSE mode switch is in the POWER position. Check EL Panel for mode display.

If not in proper mode, enter proper mode.

b. If in NORMAL OPERATIONS mode, check EL Panel fields.

(1) Verify that LOAD, LAY, or STOW fields are displayed on EL Panel of DU.

(2) LOAD, LAY, or STOW fields are highlighted when displayed.

Gun tube is already in proper position.

(3) LOAD, LAY, or STOW fields are displayed properly.

Reselect proper functional key. If gun tube does not traverse/elevate freely, notify unit maintenance. Complete mission in DEGRADED mode.

(4) LOAD, LAY, or STOW fields are not displayed.

If fields are not displayed, go to step 3.

Step 3. Check DU for fault indication.

a. GUN TUBE SERVO indicator not lit during LOAD/LAY/STOW operation.

Run PDIU system test (para L-9.3) and notify unit maintenance. Complete mission in DEGRADED mode.

b. FAULT indicator lit.

Check status line on EL Panel for faulty hardware, run PDIU system test (para L-9.3), and notify unit maintenance. Complete mission in DEGRADED mode.

Table L-4 TROUBLESHOOTING - Continued

| MALFUNCTION | TEST OR INSPECTION | CORRECTIVE ACTION |
|---|---|---|

## AFCS - Continued

6. GUN TUBE DOES NOT MOVE TO LAY POSITION WHEN LAY IS SELECTED UNDER AFCS CONTROL.

Step 1. Verify that GUN SERVO ON/OFF switch is ON.

a. If not ON, place switch ON.

b. If switch is ON, verify TRAVERSE LOCK is in UNLOCKED position. Go to step 2.

Step 2. Check to see if you are in NORMAL OPERATIONS mode.

a. Verify that TRAVERSE mode switch is in the POWER position. Check EL Panel for mode display.

If not in proper mode, enter proper mode.

b. If in NORMAL OPERATIONS mode, check EL Panel fields.

(1) Verify that LOAD, LAY, or STOW fields are displayed on EL Panel of DU.

(2) LOAD, LAY, or STOW fields are highlighted, when displayed.

Gun tube is already in proper position.

(3) LOAD, LAY, or STOW fields are displayed properly.

Reselect proper functional key. If gun tube still does not move to LAY position, notify unit maintenance. Complete mission in DEGRADED mode.

(4) LOAD, LAY, or STOW fields are not displayed.

If fields are not displayed, go to step 3.

Step 3. Check DU for fault indication.

a. GUN TUBE SERVO indicator not lit during LOAD/LAY/STOW operation.

Run PDIU system test (para L-9.3) and notify unit maintenance. Complete mission in DEGRADED mode.

b. FAULT indicator lit.

Check status line on EL Panel for faulty hardware and notify unit maintenance. Complete mission in DEGRADED mode.

Table L-4 TROUBLESHOOTING - Continued

| MALFUNCTION | TEST OR INSPECTION | CORRECTIVE ACTION |
|---|---|---|

## AFCS - Continued

7. DU DOES NOT POWER UP.

Step 1. Verify that MASTER and HYDRAULIC POWER switches are ON.

a. If not ON, place switch(es) ON.

b. If switch(es) are ON, go to step 2.

Step 2. Verify that PCU circuit breakers are ON.

a. If not ON, place appropriate circuit breaker(s) ON.

b. If all circuit breakers are ON, notify unit maintenance.

8. TRAINING MODE CANNOT BE SELECTED.

Step 1. Verify that you are in the proper mode for TRAINING selection.

a. If not, enter TRAINING mode.

b. If in TRAINING mode, place the TRAINING ON/OFF switch in ON position.

Step 2. TRAINING mode still cannot be entered.

Notify unit maintenance.

9. AFCS IS NOT ABLE TO RECEIVE A MISSION.

Step 1. Verify that during POWER UP STATUS, AFCS is okay.

a. AFCS subsystems do not check out as OK. If 1553 bus is not OK, notify unit maintenance. If the 1553 bus is degraded, go to step 2.

b. AFCS subsystems check out OK. Go to step 2.

Step 2. Verify that you are in proper mode (NORMAL OPERATIONS).

a. If not in proper mode, enter NORMAL OPERATIONS mode and go through NETWORK display until you get to SETUP AND INFORMATION display. Now go to step 3.

b. If already in proper mode, go to step 3.

Step 3. Verify that data entry has been provided and is correct for all items marked with an * on SETUP AND INFORMATION display.

a. If data has not been entered, enter data now to initialize system. Now system is able to receive a mission.

b. If data has been entered for the * items and you still are unable to receive a mission, notify unit maintenance.

Table L-4 TROUBLESHOOTING - Continued

| MALFUNCTION | TEST OR INSPECTION | CORRECTIVE ACTION |
|---|---|---|

## AFCS - Continued

10. NO AUDIBLE ALERT FOR COS OR CREW (DU POWER IS ON).

    Step 1. Verify that wire/cable connections are tight.

    If wire/cable connections are tight, go to step 2.

    Step 2. Go to para L-9.6 and perform Audio Alert Test.

    a. If intercom is not adjusted properly, adjust it now.

    b. Rerun Audio Alert Test and go to step 3.

    Step 3. If there is still no audible signal, notify unit maintenance that intercom/AFCS is faulty.

11. EL PANEL MESSAGES ARE GARBLED/HARD TO READ.

    Step 1. Verify that wire/cable connections are tight.

    If wire/cable connections are tight, go to step 2.

    Step 2. Go to para L-9.7 and perform Display Test.

    a. If test indicates that some of the pixels on EL Panel are burned out, notify unit maintenance that DU (EL Panel) is faulty.

    b. If test does not indicate a problem with pixels, have unit maintenance check AFCS.

12. DU SOFT KEYS/ARROW KEYS/KEYPAD SWITCHES, LOAD, LAY, OR STOW KEYS DO NOT RESPOND PROPERLY.

    Step 1. Verify that cable/harness connections are tight.

    If wire/cable connections are tight, go to step 2.

    Step 2. Go to para L-9.8 and perform Key and Switch Test.

    a. If test indicates a fault, notify unit maintenance that DU is faulty.

    b. If no fault is indicated, notify unit maintenance to check AFCS.

13. NAV SUBSYSTEM FAULT (DEGRADED MODE) IS INDICATED.

    Step 1. Verify that wire/cable connections are tight.

    If wire/cable connections are tight, go to step 2.

    Step 2. Traverse cab left and right 90 degrees from travel lock position and verify fault has been eliminated. If not, clean slip ring segment boards (para 3-8.17) and try the VMS test again before notifying unit maintenance.

    Step 3. Go to para L-9.2 and perform BIT Status Test.

    a. Determine which subsystem is degraded. If VMS fault is indicated, go to para L-9.5 and perform VMS test. Notify unit maintenance of particular fault.

    b. Check PDIU reconfiguration advice (Appendix G.2). Determine if DEGRADED mode is acceptable. (Certain degraded subsystems will not interfere with AFCS operation or mission capability, i.e., VMS is out.) If acceptable, continue mission.

Table L-4 TROUBLESHOOTING - Continued

| MALFUNCTION | TEST OR INSPECTION | CORRECTIVE ACTION |
|---|---|---|

## AFCS - Continued

14. DU SUBSYSTEM FAULT (DEGRADED MODE) IS INDICATED.

    Step 1. Verify that wire/cable connections are tight.

    If wire/cable connections are tight, go to step 2.

    Step 2. Go to para L-9.2 and perform BIT Status Test.

    a. Determine which subsystem is degraded. Notify unit maintenance of particular fault.

    b. Determine if DEGRADED mode is acceptable. (Certain degraded subsystems will not interfere with AFCS operation or mission capability; i.e., Embedded Trainer is out.) If acceptable, continue mission.

15. WPN SUBSYSTEM FAULT (DEGRADED MODE) IS INDICATED.

    Step 1. Verify that wire/cable connections are tight.

    If wire/cable connections are tight, go to step 2.

    Step 2. Go to para L-9.2 and perform BIT Status Test.

    a. Determine which subsystem is degraded. Notify unit maintenance of particular fault.

    b. Check PDIU reconfiguration advice (Appendix G.2). Determine if DEGRADED mode is acceptable. (Certain degraded subsystems will not interfere with AFCS operation or mission capability; i.e., Tube Temp is out.) If acceptable, continue mission.

16. PDIU SUBSYSTEM FAULT (DEGRADED MODE) IS INDICATED.

    Step 1. Verify that wire/cable connections are tight.

    If wire/cable connections are tight, go to step 2.

    Step 2. Go to para L-9.2 and perform BIT Status Test.

    a. Determine which subsystem is degraded. Notify unit maintenance of particular fault.

    b. Determine if DEGRADED mode is acceptable. (Certain degraded subsystems will not interfere with AFCS operation or mission; i.e., PDIU is out.) If acceptable, continue mission.

17. PCU SUBSYSTEM FAULT (DEGRADED MODE) IS INDICATED.

    Step 1. Verify that wire/cable connections are tight.

    If wire/cable connections are tight, go to step 2.

    Step 2. Go to para L-9.2 and perform BIT Status Test.

    a. Determine which subsystem is degraded. Notify unit maintenance of particular fault.

    b. Determine if DEGRADED mode is acceptable. (Certain degraded subsystems will not interfere with AFCS operation or mission capability; i.e., PCU BIT failed.) If acceptable, continue mission.

Table L-4 TROUBLESHOOTING - Continued

| MALFUNCTION | TEST OR INSPECTION | CORRECTIVE ACTION |
|---|---|---|

## AFCS - Continued

18. MVS SUBSYSTEM FAULT (DEGRADED MODE) IS INDICATED.

**NOTE**

Make sure the 1553 termination connector is installed (para 2-22.3) if M93 radar antenna transceiver is not mounted.

Step 1. Verify that cable/harness connections are tight.

If wire/cable connections are tight, go to step 2.

Step 2. Go to para L-9.2 and perform BIT status test.

a. Determine which subsystem is degraded. Notify unit maintenance of particular fault.

b. Determine if DEGRADED mode is acceptable. (Certain degraded subsytems will not interfere with AFCS operation or mission capability; i.e. PCU bit failed.) If acceptable, continue mission.

Table L-4 TROUBLESHOOTING - Continued

| MALFUNCTION<br>TEST OR INSPECTION<br>CORRECTIVE ACTION |
|---|

## AFCS - Continued

19. AFCS POSITION DRIFTS/DRUH "OP FAIL" IS INDICATED.

**NOTE**

- Infrequently, the AFCS position has been observed to drift while the howitzer is stationary, or the "NAV OUT - DRU OP FAIL" alert message is displayed, for no apparent reason. These problems have been traced to errors in communications between the AFCS and DRUH. With the GPS receiver (PLGR) installed and the AFCS operated in a GPS aided mode, the problem will be bound to an acceptable level. If the PLGR is off or not receiving acceptable signals from four satellites, the drift may occur to an unacceptable level.
- Unless there is an operational constraint on using GPS, it is recommended that the PLGR be installed and the AFCS be operated in the GPS aided mode.

Follow the steps below if position is drifting when the howitzer is stationary and any of the following symptoms are observed: (Note that these conditions are normal when the howitzer is travelling.)

a. "ZPT" is displayed in field 6 in the top line of the display. (Note that it takes about 30 seconds after the vehicle stops for a normal "ZPT" indication to clear.)

b. AFCS position changes more than 10 meters.

c. The "ZUPT REQUIRED" alert message is displayed.

d. The "NAV POS UPDATE REQUESTED" alert message is displayed.

e. The "PRESS ACK WHEN TUBE STOWED" alert message is displayed when the howitzer hasn't traveled.

f. The "POS UPDATE INTERRUPTED" alert message is displayed after a NAV UPDATE is attempted.

g. The "POS UPDATE RJTD HOWITZER MOVG" alert message is displayed after a NAV UPDATE is attempted.

(Note that the "POSITION UPDATE REQUIRED" alert message can be triggered by several conditions. Unless accompanied by one of the above indications, it is not a symptom of position drift.)

If any of the position drift symptoms is observed or the "NAV OUT - DRU OP FAIL" alert message is displayed, perform the following procedure:

Step 1. Power down the AFCS.

Step 2. Power the AFCS back up.

Step 3. Reinitialize the AFCS

**NOTE**

Do not replace the DRUH or the ACU for position drift or DRU OP FAIL problems. If cycling power, as discussed above, doesn't relieve the symptoms, notify unit maintenance.

# L-11 AFCS CONFIDENCE TESTS.

## L-11.1 Verification of Position and Direction Using Survey Data.

**NOTE**

To perform the direction tests, it is important that the spheroid and grid zone stored in the AFCS map mod are correct for the area of operation. If the AFCS spheroid and grid zone are incorrect, get a correct map mod from FDC (select GET INITIALIZATION on the FDC DATA XFER menu) or enter the correct spheroid and grid zone by selecting ENTER SPHEROID/DATUM on the SETUP AND INFORMATION menu.

During field training or combat, the position and direction data shown by the AFCS can be checked by using a surveyed location. The built-in-test (BIT) does not fully assure that the AFCS accuracy is within tolerance.

To perform the position test, two carefully surveyed points about 3-4 km apart are required, with an accuracy of 1:1000 or better.

To perform the direction test, there are three options:

- Surveyed orienting station and end of orienting line (OS/EOL). The OS should be at least 100 meters from the howitzer survey point.
- A surveyed azimuth to a distant aiming point (DAP) that is at least 1500 meters away from the survey point. A closer point may be used, but the test will not be as accurate.
- When no survey azimuth is available, a deflection test using the PANTEL is possible.

Perform the tests as follows.

L-11.1.1 Verification of Position Using Survey Points.

a. Initialize the AFCS with the howitzer left front sprocket within one meter of the first survey point. Ensure easting, northing, and altitude match the data posted on the survey marker.

**NOTE**

If a surveyed azimuth to a DAP will be used for a direction test at the second survey point, then the FDC move order should include the azimuth to DAP as the center of sector. If a manual move order is used, first enter the azimuth to DAP as the center of sector on the DEFINE SECTOR OF FIRE menu (select SECTOR OF FIRE from SETUP AND INFORMATION menu). Then by positioning howitzer at second survey point with vehicle heading aligned with center of sector, you will ensure the tube is pointed toward the DAP.

b. After the nav subsystem is fully aligned, receive a move order from FDC (destination INIT POINT) to the second survey point. If FDC is not available, enter a manual move order to the second survey point.

c. Move to the second survey point without stopping.

d. Upon arrival at the survey point, position howitzer with the left front sprocket within one meter of survey point. Wait 30 seconds before proceeding to next step.

# L-11 AFCS CONFIDENCE TESTS - CONTINUED

## L-11.1 Verification of Position and Direction Using Survey Data - Continued

L-11.1.1 Verification of Position Using Survey Points - Continued

e. With the STEER TO screen displayed, read and record AFCS position data under POSN (easting, northing, and altitude) and the range to destination (RNG) in the upper right corner of the screen. Subtract the POSN altitude from the DESTN altitude.

f. Compare the data obtained in step e with the following tolerances.

| | |
|---|---|
| RNG | 26 meters or less |
| Altitude Difference | ± 26 meters |

g. If the AFCS data is within tolerance, but the POSN easting, northing, and altitude do not match the survey marker data exactly, then press ARRIVED key and do a NAV POSN UPDATE, using the NAV POSN UPDATE screen from the SETUP AND INFORMATION menu.

h. If AFCS data is within tolerance, position test is complete. Skip the steps below and proceed to the chosen method for testing direction.

i. If the AFCS data is out of tolerance, verify the DESTN easting, northing, and altitude matches the data on the survey marker. If they do not match, record the survey marker data for later use.

j. Press ARRIVED key. Select NAV POSN UPDATE from the SETUP AND INFORMATION menu to enter the survey marker data. Do a NAV POSN UPDATE by pressing the USE ALL key.

k. After the nav subsystem is fully aligned, receive a MOVE ORDER from FDC (or do a manual move order) to the first survey point.

l. Move to the first survey point without stopping.

m. Repeat steps d through f at the first survey point. Record the data and note whether the AFCS is in or out of tolerance.

n. Press ARRIVED key. Select NAV update from the SETUP AND INFORMATION menu to enter the survey marker data. Do a NAV position update by pressing the USE ALL key.

o. After the nav subsystem is fully aligned, receive a move order from FDC (or do a manual move order) to the second survey point.

p. Move to the second survey point without stopping.

q. Repeat steps d through f at the second survey point. Record the data and note whether the AFCS is in or out of tolerance.

r. If the AFCS was out of tolerance two out of three trials, notify unit maintenance.

s. If the AFCS was in tolerance two out of three trials, press ARRIVED key. Select NAV UPDATE from the SETUP AND INFORMATION menu and enter the second survey marker data. Do a NAV POSN UPDATE by pressing USE ALL key. Proceed to the chosen method for testing direction.

L-11.1.2 Verification of Direction Using an OS/EOL.

The AFCS nav subsystem uses gyros to align the system to north. Checks of AFCS direction may be accomplished using survey points and the M2 aiming circle, or a theodolite. Perform the test as follows.

a. Ensure the howitzer is fully initialized and emplaced at the survey point on level ground. Ensure that a NAV POSN UPDATE has been done using the survey marker data.

b. Unstow the tube. Install muzzle crosshairs.

# L-11 AFCS CONFIDENCE TESTS - CONTINUED

## L-11.1 Verification of Position and Direction Using Survey Data - Continued

L-11.1.2 Verification of Direction Using an OS/EOL - Continued

c. Set up and level the aiming circle over the OS.

d. Place the azimuth of the Orienting Line (OL) on the aiming circle using the upper (recording) motion.

e. Sight the aiming circle on the EOL using the lower (non-recording) motion.

f. Sight the aiming circle toward the howitzer using the upper (recording) motion.

g. Using the primer vent hole and muzzle crosshairs, align the cannon bore on the aiming circle lens.

h. With the upper (recording) motion of the aiming circle, align the vertical crosshair on the center of the cannon bore. Aiming circle operator announces "NUMBER (SO AND SO) REFER, AIMING POINT THIS INSTRUMENT."

i. Read the azimuth to the cannon bore. This corresponds to the back azimuth of the cannon bore.

j. If the aiming circle azimuth to the tube is greater than 3200, subtract 3200 to obtain tube pointing azimuth. If the aiming circle azimuth to the tube is less than 3200, add 3200 to obtain tube pointing azimuth.

k. Select DISPLAY FORMAT from the SETUP AND INFORMATION menu. Change display from DEFLECTION to AZIMUTH and press USE ALL key.

l. Select FIRE COMMANDS from the SETUP AND INFORMATION menu. When FIRE COMMANDS menu is displayed, press USE ALL to display a FIRE MISSION screen.

m. Read and record ACTL AZ and QUAD off the FIRE MISSION screen. AFCS operator announces "NUMBER (SO AND SO), AZIMUTH (SO MUCH)".

n. Aiming circle operator compares the readings from steps j and m. If the difference is with ± 2 mils, the aiming circle operator announces "SAFE".

**NOTE**

Quadrant should also be checked with a pretested gunner's quadrant. After adjusting for breech correction, reading should compare within ± 2 mils.

o. AFCS operator compares the readings from steps k and n. If the difference is within ± 2 mils, the direction test is complete. Skip the steps below. Press EOM key on the FIRE MISSION menu to return to the SETUP AND INFORMATION menu. Select DISPLAY FORMAT and change display back to DEFLECTION and press USE ALL key.

p. If either the azimuth or quadrant difference exceeds ± 2 mils, stow tube. Select NAV UPDATE from SETUP AND INFORMATION menu. When NAV UPDATE menu is displayed, check data and correct if necessary. When data is correct, select FORCE NAV RESTART and press USE ALL key to align the nav subsystem.

q. Recheck the aiming circle level and position over the stake.

r. After the nav subsystem if fully aligned, unstow tube and repeat steps d through o.

s. If results are still out of tolerance, notify unit maintenance.

# L-11 AFCS CONFIDENCE TESTS - CONTINUED

## L-11.1 Verification of Position and Direction Using Survey Data - Continued

L-11.1.3 Verification of Direction Using an Azimuth to a DAP.

The AFCS nav subsystem uses gyros to align the system to north. Checks of AFCS direction may be accomplished using a survey point and a surveyed azimuth to a DAP at least 1500 meters away. A closer point may be used, but the test will not be as accurate. Perform the test as follows.

a. Ensure the AFCS is fully initialized and the nav subsystem is fully aligned. Ensure the howitzer is positioned with the left front sprocket within one meter of the survey point. Ensure the howitzer is pointed generally toward the DAP.

b. Unstow the tube.

c. Align the cannon bore on the DAP.

d. Select DISPLAY FORMAT from the SETUP AND INFORMATION menu. Change display from DEFLECTION to AZIMUTH and press USE ALL key.

e. Select FIRE COMMANDS from the SETUP AND INFORMATION menu. When FIRE COMMAND menu is displayed, press USE ALL to display a FIRE MISSION screen.

f. Read and record ACTL AZ and QUAD off the FIRE MISSION screen.

g. Compare the azimuth display on the AFCS (ACTL AZ) with the surveyed azimuth to the DAP. Azimuth should compare within ± 2 mils.

h. Compare the quadrant displayed on the AFCS (ACTL QUAD) with the quadrant elevation off the M145A1 Mount. Quadrant elevation should compare within ± 2 mils.

**NOTE**

Quadrant should also be checked with a pretested gunner's quadrant. After adjusting for breech correction, reading should compare within ± 2 mils.

i. If the results are within tolerance, the test is complete. Skip the steps below. Press EOM key on the FIRE MISSION menu to return to the SETUP AND INFORMATION menu. Select DISPLAY FORMAT and change display back to DEFLECTION and press USE ALL key.

j. If the results are out of tolerance, stow tube. Select NAV UPDATE from SETUP AND INFORMATION menu. When NAV UPDATE menu is displayed, check data and correct if necessary. When data is correct, select FORCE NAV RESTART and press USE ALL key to align the nav subsystem.

k. After the NAV subsystem is fully aligned, unstow tube and repeat steps c through i.

l. If results are still out of tolerance, notify unit maintenance.

# L-11 AFCS CONFIDENCE TESTS - CONTINUED

## L-11.1 Verification of Position and Direction Using Survey Data - Continued

L-11.1.4 Verification of Deflection and Quadrant.

If surveyed azimuth data is not available, you can check the AFCS and the PANTEL for a match in deflection and quadrant elevation. To perform this test, a DAP at least 1500 meters away is needed. Perform the test as follows.

**NOTE**

The howitzer may be positioned at a survey point if the position test is also being conducted. However, a survey point is not necessary to perform the deflection and quadrant test alone.

a. Receive a move order from FDC to fire point. If FDC is not available, enter a manual move order to a FIRE POINT.

b. With the EMPLACE FIRE POINT screen displayed, position howitzer with tube pointed generally toward center of sector (base azimuth).

c. Press ARRIVED and unstow tube. Install muzzle crosshairs.

d. Use default value for MAXIMUM TUBE ELEVATION and press USE ALL on the SITE DEFINITION screen. The SECTION IN ORDER AT FIRE POINT screen will be displayed.

e. Using the power control handle, traverse the tube until ACTL DEFL displays 3200 deflection on the SECTION IN ORDER screen (this is the center of sector or base azimuth).

**NOTE**

If there is no FPF or priority fire mission on the screen, you may press the LOAD key to traverse the tube to 3200 deflection. Ensure that ACTL DEFL remains on 3200 deflection when you release the LOAD key. Adjust with power control handle, if necessary.

f. Check boresight of PANTEL with M140/M140A1 alignment device.

g. Select a DAP that is at least 1500 meters away.

h. Using the Azimuth deflection knob, align the vertical hairline of the PANTEL on the DAP. Level the pitch and cross level bubbles and check alignment.

i. Rotate counter rest knob on PANTEL until 3200 appears on reset counter.

j. Using the primer vent hole and muzzle crosshairs, align the tube on the DAP.

k. Level pitch and cross level bubbles on PANTEL mount. Using the azimuth deflection knob, align vertical hairline of PANTEL on the DAP. Record PANTEL deflection reading.

l. Center elevation level vial on M145A1 mount. Record M145A1 quadrant reading.

m. Read and record the ACTL deflection (DEFL) and quadrant (QUAD) obtained on the PDFCS SECTION IN ORDER screen.

n. Compare deflections and quadrants obtained in steps k, l, and m. The tolerance between readings is $\pm$ 2 mils for both deflection and quadrant.

o. If AFCS and PANTEL agree within the tolerance, the test is complete. Skip the step below.

p. If AFCS and PANTEL do not agree with the tolerance, notify unit maintenance.

## L-11 AFCS CONFIDENCE TESTS - CONTINUED

### L-11.2 Testing the Accuracy of the AFCS Elevation.

**NOTE**

Before performing this test, ensure that the cannon assembly is properly equilibrated (para 3-8.2) to prevent tube elevation drift.

The AFCS elevation accuracy should be tested whenever the trunnions have been leveled for optical fire control alignment test and measurements. It is suggested that a survey point be put in at the location of these tests for the purpose of proper initialization of the AFCS.

This test is used to verify the AFCS quadrant elevation and gunner's quadrant agree at all elevations. Perform the test as follows.

a. Initialize the AFCS with the tube stowed in the travel lock.

b. When the Nav Subsystem is fully aligned, unstow tube, and recheck trunnion level using a plumbline.

c. Level the tube using a pretested gunner's quadrant on the machined surface just rear of the muzzle brake. Set the gunner's quadrant on the top (widest) surface with the feet aligned with the machined shoulder.

d. With the tube held at the level position, place the gunner's quadrant on the breech elevation seats. Measure and record breech correction.

e. Select FIRE COMMANDS from the SETUP AND INFORMATION menu. When FIRE COMMANDS menu is displayed, press USE ALL to display a FIRE MISSION screen.

f. Read and record ACTL QUAD on the FIRE MISSION screen. QUAD should be zero mils $\pm$ 0.5 mils.

g. If ACTL QUAD is not within tolerance, notify unit maintenance.

h. Set the scale of the gunner's quadrant to 100 mils plus the sum of the gunner's quadrant correction and the breech correction.

i. Place the gunner's quadrant on the breech seats. Elevate the tube (power or manual) until the bubble is centered.

j. Read and record the ACTL QUAD on the FIRE MISSION screen. If the difference between the ACTL QUAD and the tube elevation exceeds $\pm$ 0.5 mils, verify all settings. Record the difference.

k. Repeat steps h through j, adding 100 mils elevation each time, until maximum elevation is reached. Then decrease elevation in 100 mil increments and repeat measurements.

l. Compare all differences to the tolerance of $\pm$ 0.5 mils. If the reading at any elevation exceeds the tolerance, notify unit maintenance.

# APPENDIX M

# OPERATION OF PALADIN DIGITAL FIRE CONTROL SYSTEM (PDFCS) (VERSION 7P SOFTWARE)

## TABLE OF CONTENTS


| | Page |
|---|---|
| M-1 SCOPE | M-3 |
| M-2 GENERAL | M-3 |
| M-3 PDFCS OPERATING MODES | M-3 |
| M-3.1 FC Mode | M-3 |
| M-3.2 Training Mode | M-4 |
| M-3.3 Normal Operation Mode | M-4 |
| M-3.4 Maintenance Mode | M-4 |
| M-3.5 FBCB2 (SA) Mode | M-4 |
| M-4 PDFCS OPERATING CONTROLS AND INDICATORS | M-5 |
| M-5 DC POWER MESSAGES | M-22 |
| M-5.1 On Auxiliary Power | M-22 |
| M-5.2 Auxiliary Power Not Available | M-23 |
| M-5.3 Vehicle and Auxiliary Power OK | M-23 |
| M-6 PDFCS INITIALIZATION | M-24 |
| M-6.1 System Power Up | M-24 |
| M-6.2 Initializing | M-29 |
| M-6.3 Initialization After an Orderly Shutdown | M-81 |
| M-6.4 Initialization After a Catastrophic Failure | M-98 |
| M-7 PDFCS TRAVEL MODE | M-100 |
| M-7.1 Movement | M-100 |
| M-7.2 Emplacement Fire Point/Fire Area | M-105 |
| M-8 PDFCS FIRE MISSION | M-118 |
| M-8.1 Platoon Operation Center | M-121 |
| M-8.2 Firing Mission | M-123 |
| M-8.3 Ammunition Accountability | M-125 |
| M-8.4 End of Mission | M-127 |
| M-8.5 PDFCS Emergency Mission | M-128 |
| M-8.6 Direct Fire Procedures Using PDFCS | M-130 |
| M-8.7 System Menus | M-135 |
| M-9 PDFCS AND PDI FAULT DETECTION | M-156 |
| M-9.1 Power Up Built-In-Test (BIT) | M-156 |
| M-9.2 PDFCS Status | M-159 |
| M-9.3 PDI System Test | M-163 |
| M-9.4 Vehicle Motion Sensor Test | M-177 |
| M-9.5 Audio Alert Test | M-179 |
| M-9.6 Display Test | M-180 |
| M-9.7 Key and Switch Test | M-181 |
| M-9.8 Boresight Angle Entry | M-182 |
| M-9.9 Equivalent Full Charge (EFC) | M-182 |
| M-9.10 PDFCS and PDCU Abbreviations | M-187 |
| M-9.11 Software Version/Configuration Display | M-191 |
| M-9.12 CPU Environment Display | M-192 |
| M-10 SYMPTOM INDEX | M-193 |
| M-11 PDFCS CONFIDENCE TESTS | M-204 |
| M-11.1 Verification of Position and Direction Using Survey Data | M-204 |
| M-11.2 Testing the Accuracy of the PDFCS Elevation | M-209 |

## M-1 SCOPE.

This appendix contains the procedures and actions necessary for proper operation of the Paladin Digital Fire Control System (PDFCS) utilizing Version 7P Software.

## M-2 GENERAL.

The Paladin Digital Fire Control System (PDFCS) performs ballistic computations and weapon control, provides the interface between the PDFCS computer and the radios, and stores data which is displayed/entered on the Display Unit (DU).

PDFCS eliminates the use of optical fire control equipment in laying vehicle for deflection and elevation during indirect fire missions. PDFCS receives target information, calculates weapons position and automatically lays the gun tube. Calls for fire are accepted directly. Communication can be performed with any authorized source.

In addition PDFCS contains a maintenance utility designed to perform initial troubleshooting of the system and a Built-In Training Device (Embedded Trainer) containing a tutorial on system operations.

## M-3 PDFCS OPERATING MODES.

PDFCS has two operational modes: Fire Control (FC) and Force XXI Battle Command Brigade and Below (FBCB2), each of these is as discussed below. Since the primary function of PDFCS is Fire Control, the terms “PDFCS” and “FC” are often used interchangeably. Since the primary function of FBCB2 is Situational Awareness (SA), the terms “FBCB2” and “SA” are often used interchangeably.

### M-3.1 FC Mode.

Refers to the PDFCS functionally to provide for fire control net connectivity, FC unit commands, fire mission messages, and Paladin system controls. The PDFCS has automatic mode control for FC mode to automatically take charge of the display upon receipt of a FC message. The operator has the capability to switch between FC and SA modes of operations.

Fire Control functions are performed during three operating modes. These modes are Training, Normal Operations, and Maintenance.

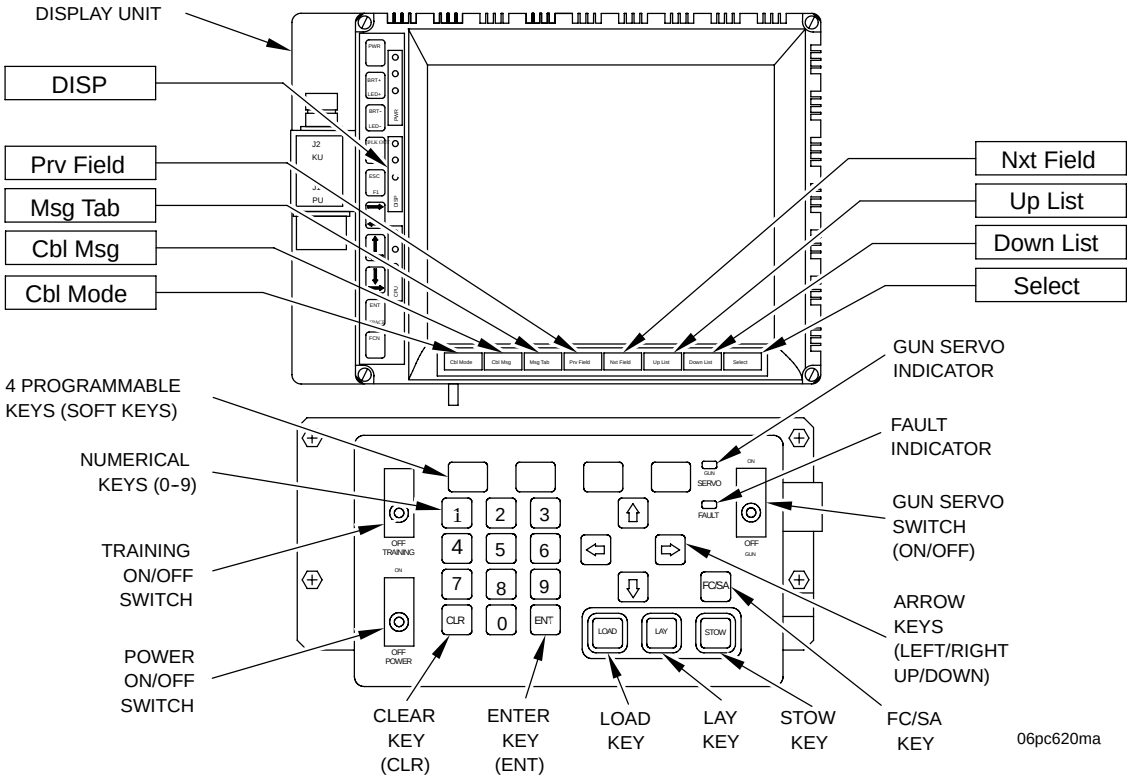

## M-3 PDFCS OPERATING MODES - CONTINUED

### M-3.2 Training Mode.

The PDFCS has a Built-In Training Device (Embedded Trainer). This can be used as a tutorial device to train, maintain, improve, and evaluate crew efficiency/performance. This function allows for simulating Move and Fire Missions under a variety of battlefield scenarios. These include: Shoot Heavy, Move Heavy, Modified Balanced, as well as Degraded conditions for Fire Control, all without need for radio communications (PDFCS simulates all radio communications so training can be accomplished without POC assets). In addition, the Embedded Trainer can be run from a Beginner's Tutorial option through a full scale scenario.

### M-3.3 Normal Operation Mode.

During the normal operation mode, there are submodes which make up initializing the system navigation, emplacement, and firing the howitzer. These submodes are initialization, travel, and fire mission.

### M-3.4 Maintenance Mode.

This mode is designed to be used by the crew to do initial troubleshooting of a failure in the PDFCS, isolate to an LRU and expedite repair, and view detailed software configuration information for each LRU/CPCI.

**NOTE**

In the SA mode, M109A6 crews should not respond to either of the following FBCB2 message alerts:

- Fire Mission
- Check Fire

These messages should only be acted upon when received in the Fire Control (FC) mode.

### M-3.5 FBCB2 (SA) Mode.

Refers to Situational Awareness and Command and Control (C2) operations provided by FBCB2. This mode provides connectivity to the Tactical Internet, a constantly updated SA picture (friendly and reported enemy/other positions, danger areas and obstacles), FBCB2 system controls as well as report, alert, planning, overlay, logistic, coordination and fire support messages.

## M-4 PDFCS OPERATING CONTROLS AND INDICATORS.

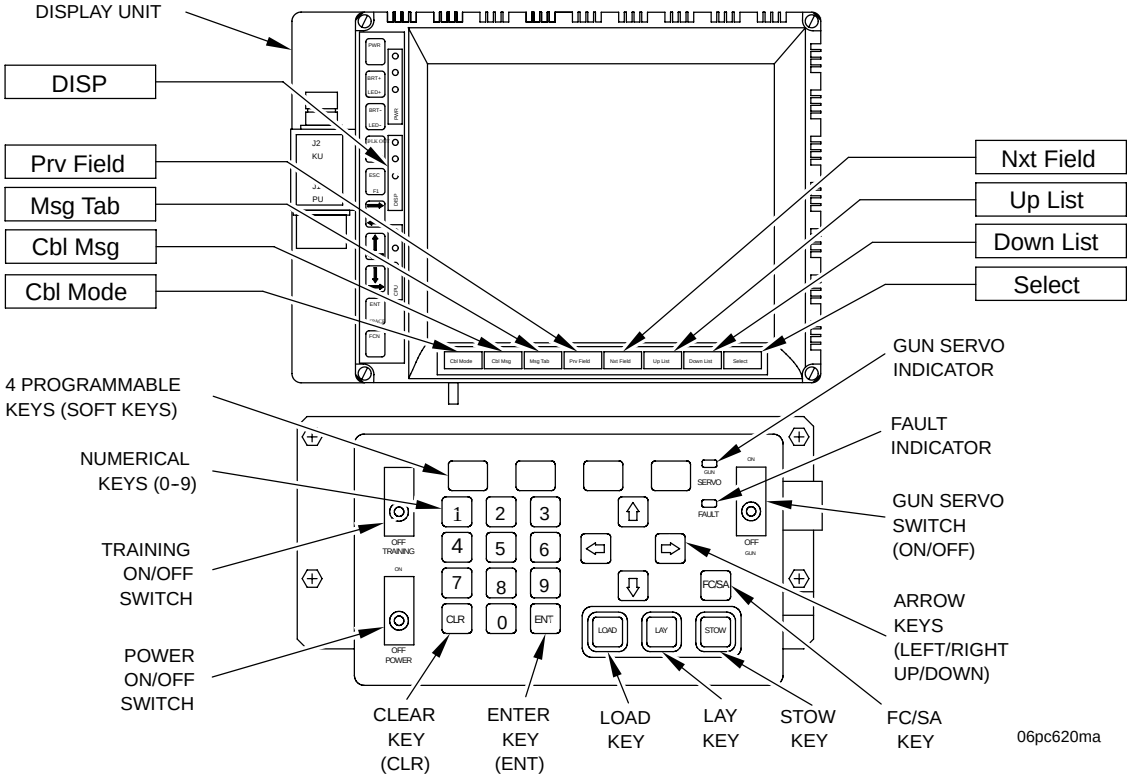


a. GUN SERVO Indicator Lamp. This amber indicator lamp will come on only during PDFCS movement of the weapon. Additionally, the lamp stays on when the servos position the weapon on command LAY.

b. GUN SERVO ON/OFF Switch. This toggle switch enables gun servo units. Lifting guard and placing switch in ON position allows PDFCS to control gun servo valves. (This is required for Gun Laying by PDFCS, also needed for STOW and LOAD commands by PDFCS.) Closing switch guard will automatically place switch in OFF position.

c. Arrow Keys (up/right/down and left). Pressing proper key will move highlighted area of display on PDU.

d. FAULT Indicator Lamp. This indicator lamp will come on when a failure has been detected by internal BIT of PDFCS.

e. STOW Key. With GUN switch ON, pressing STOW key will automatically return gun to a position above the travel lock. (Final tube positioning to secure gun in travel lock must be done with gunner's/COS control handles.)

f. LAY Key. With GUN switch ON, pressing LAY key will automatically drive gun to Commanded (CMD) position by PDFCS (in proper azimuth and elevation).

g. LOAD Key. With GUN switch ON, pressing LOAD key during high firing angles will automatically return gun to a preselected low elevation angle. This allows easier loading of gun.

(1) During Fire Mission. Pressing LOAD key during a Fire Mission will return gun to preselected load elevation and traverse gun to LAY position.

## M-4 PDFCS OPERATING CONTROLS AND INDICATORS - CONTINUED

(2) Prior to Fire Mission. Pressing LOAD key prior to a Fire Mission (Section in Order) will return gun to preselected load elevation and traverse to Final Protective Fire (FPF) azimuth.

**NOTE**

If there is no FPF, the gun will traverse to the assigned center sector of fire.

h. KEYPAD (Numerals 0 through 9, CLR--clear, and ENT--enter keys). These keys are used for entering data. The CLR key is used to delete a numeric entry within the cursor field on the display. The ENT key is used to insert a numeric entry into highlighted field on the display.

**NOTE**

If PDFCS POWER is switched to OFF, alignment data will have to be reentered at next power up. Navigation Restart is a 15-minute procedure. Closing switch guard will not place this switch in OFF position. Switch must be manually put in OFF position.

i. POWER ON/OFF Switch. Lifting the guard and placing switch in ON position powers up PDFCS. System will then automatically perform self-test (BIT). After BIT, PDFCS will control gun hydraulics when GUN ON/OFF switch is ON. At this time, some gun movement may occur. Do not power down PDFCS when entering/exiting different modes. After PDFCS has been powered down, the PDFCS will power up and be operational in approximately 3-4 minutes.

j. TRAINING ON/OFF Switch. Lifting the guard and placing switch in ON position while PDFCS is at the select operating mode menu allows operator to select Training Mode. (To exit Training Mode, either finish scenario and exit via appropriate soft key, or place TRAINING ON/OFF switch to OFF and select appropriate soft key to exit.)

k. Soft Keys (four). Function of keys depends on menu being displayed (worked). Lowest display line identifies function.

l. FC/SA Key. This key is used to toggle the display between PDFCS (FC) and FBCB2 (SA) modes.

m. PDFCS Display Unit (PDU). The PDU displays both FC and SA screens. If the fire control screen is active, the FBCB2 screen can be activated by pressing the FC/SA key on the keypad. If the FBCB2 screen is active, the fire control screen can be activated by pressing the FC/SA key on the keypad. If a user is viewing FBCB2, the display will automatically switch the FC screen if important fire control alerts occur. The PDFCS keypad buttons are disabled when FBCB2 is displayed. The PDFCS keypad is only used in conjunction with functions. All FBCB2 functions are performed using the touchscreen. When the FC screen is displayed, the format will show possible fire mission data fields, advisory messages, instructions and commands. The data fields in the FC screen are numbered as follows:

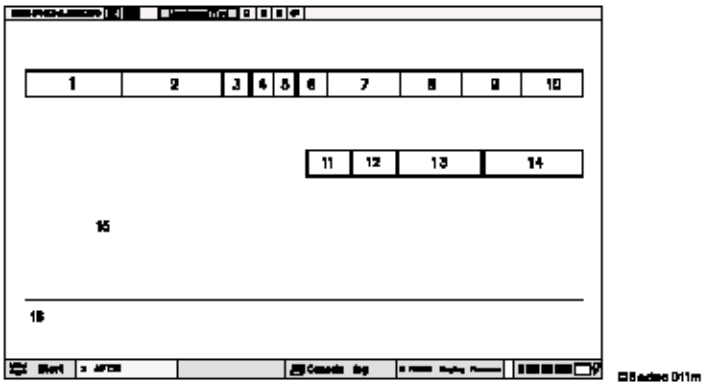

## M-4 PDFCS OPERATING CONTROLS AND INDICATORS - CONTINUED

(1) Field 1, PDFCS Operational Mode – The following can appear:

NORMAL – This indicates that the NORMAL OPERATIONAL mode is selected.

EMB TNG – This indicates that the TRAINING mode is selected.

MAINT – This indicates that the maintenance mode is selected.

REV XX – This indicates system software version identifier. Shown only until an PDFCS mode selection is made.

(blank) – This indicates that the Fire Control software is undetermined.

(2) Field 2, FIRE MISSION STATUS – The following can appear:

CHKFIRE – This indicates that a checkfire status exists on the PDFCS. This message will appear in inverse video.

FIREMSN – This indicates that the PDFCS is performing a fire mission. This message will appear in inverse video.

(blank) – This indicates that the PDFCS is in normal operating status awaiting orders.

(3) Field 3, MOVE ORDER INDICATOR – The following data may appear.

MO – This indicates that the PDFCS has an active move order. This indicator will appear in inverse video.

(blank) – This indicates that there is no move order active.

(4) Field 4, WARNING MESSAGE INDICATOR –

W – If the letter W appears in inverse video a warning message has been queued.

(blank) – This indicates that there are no warning messages for the operator to view.

(5) Field 5, RECEIVED MESSAGE INDICATOR –

R – If the letter R appears in inverse video a received message has been queued.

(blank) – This indicates that there are no received messages for the operator.

(6) Field 6, ALIGN TIME TO GO INDICATOR – This three (3) character field indicates that the PDFCS is performing navigation alignment and should be complete in “nnn” (0...900) seconds or indicates that the PDFCS has initiated a command sequence with the Navigation Device. Following are the data that may appear in this field, in highest to lowest priority order:

ZPT – This indicates that the DRU has indicated a ZUPT Stop has been requested.

CMD – This indicates that the PDFCS has initiated a command sequence with the Navigation Device and the command sequence has not yet been completed.

POS – This indicates that the Navigation Device has requested a position update.

nnn – This three digit number indicates the number of seconds remaining before navigation alignment is complete. If the most significant digit is not the left most digit, the value will be padded with zeros on its left side.

(blank) – If the field is blank then the PDFCS is not undergoing navigational alignment.

## M-4 PDFCS OPERATING CONTROLS AND INDICATORS - CONTINUED

(7) Field 7, FUNCTION STATUS – Indicates the status of the various PDFCS functions. The following data may appear in this field when in normal or training operational modes:

"NACW" – Each letter of this string indicates that a function is not available or non-operational. The letters represent the status of the following functions:

"N" – Navigation function

"A" – GPS Aiding function

"C" – Communications Function

"W" – Weapon Control Function

" " – Spare

(blank) – The absence of a letter indicates that the associated function is available.

**NOTE**

When "DRY FIRE" has been selected in the FIRE MISSION MODE Muzzle Velocity processing and EFC processing shall not be performed. All other functions are performed as they would be in a normal Live Fire Mode. An operator warning, "D" shall be shown in position 4 of the Function Status Field. This warning shall remain in all screens until "LIVE FIRE" is selected.

(8) Field 8, LOAD KEY STATUS – this four (4) character field indicates the status of the load key. The following data may appear in this field:

LOAD – This indicates that the load key is active. If this field is highlighted, it indicates that the tube is within the load elevation.

(blank) – This indicates that the load key is inactive.

(9) Field 9, LAY KEY STATUS – This three (3) character field indicates the status of the LAY key. The following may appear in this field:

LAY – This indicates that the LAY key is active. If this field is highlighted, it indicates that the tube is at the latest LAY commands.

(blank) – This indicates that the LAY key is inactive.

## M-4 PDFCS OPERATING CONTROLS AND INDICATORS - CONTINUED

(10) Field 10, STOW KEY STATUS – This three (3) character field indicates the status of the STOW key. The following data may appear in this field:

STOW – This indicates that the STOW key is active. If this field is highlighted it indicates that the tube is within the STOW position.

(blank) – This indicates that the STOW key is inactive.

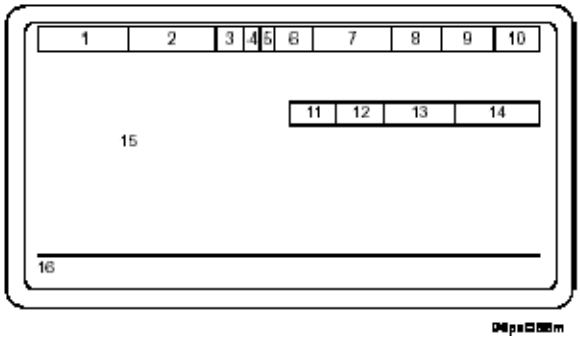


(11) Field 11, Mission Priority – The following may appear:

FPF – This indicates that the mission is a Final Protective Fire mission.

PRI – This indicates that the mission is a Priority mission.

(blank) – This indicates that the mission is a Normal mission.

(12) Field 12, Mission Urgency – The following may appear:

DC – This indicates that the mission has an associated Danger Close status.

TOT – This indicates that the PDFCS is processing a Time On Target fire mission.

(blank) – This indicates that the PDFCS has Normal urgency for this mission.

(13) Field 13, Tube Temperature Status – One of the following three will appear:

COLD – This indicates that the tube temperature is in a cold status.

WARM – This indicates that the tube temperature is in a warm status.

HOT – This indicates that the tube temperature is in a hot status.

(blank) – This indicates that the tube temperature is not available.

## M-4 PDFCS OPERATING CONTROLS AND INDICATORS - CONTINUED

(14) Field 14, Safe Time in Tube Status - This indicates the current safe time for a round to be in the tube. The time is shown in minutes; refer to para 2-17d. When the tube is cold, this indicator is blank to indicate that there is no limit on the safe time in the tube.

(15) Field 15, Various instructions and warnings will appear in this area, as necessary. Some of the advisory messages and/or instructions displayed in field 15 are listed below:

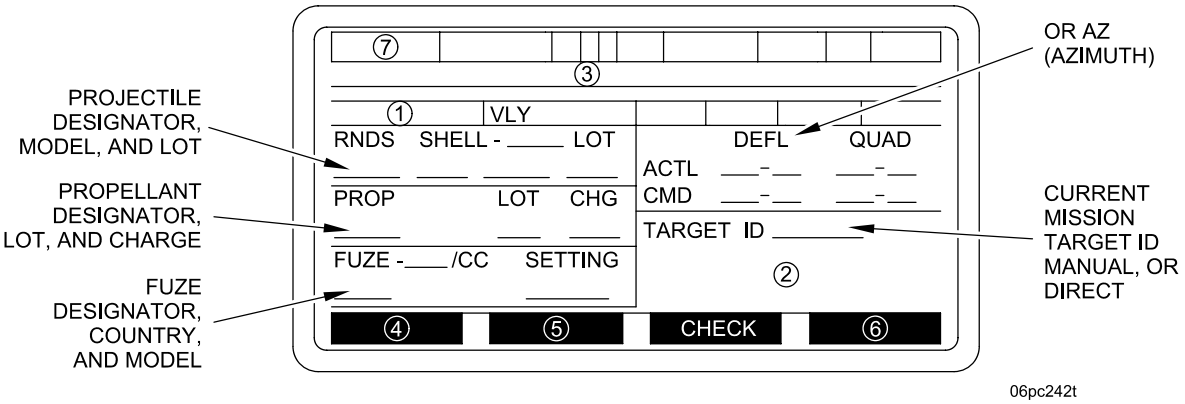


Listed below are the legal values for each field of FIRE MISSION display.

VLY / = current volley being displayed: 1/1, 1/2 or 2/2

**NOTE**

The 1/1, 1/2, and 2/2 data shall not be displayed for operator initiated fire missions and missions that are in fire commands format.

RNDS = Number of rounds remaining to fire 1..99
SHELL = Shell model and mnemonic
SHELL LOT = A..Z
PROP = Propellant model
PROP LOT = A..Z
CHG = Propellant charge designator (see Table M-1)
FUZE = Fuze model, Country and mnemonic
SETTING = Computed fuze setting, “PD” or “DELAY”
DEFL or AZ = 0.0..6399.9 mils
QUAD = -200.0+1600.0 mils
TARGET ID = Current mission target identification

Instructions and warnings which could appear on the FIRE MISSION display:

(1) Blank field 1 = Fire mission is not a sheaf
SHEAF PT = This gun is participating in a multigun sheaf
SHEAF a/s = This gun is conducting a single gun sheaf
where: a..Current aimpoint number; b..Number of sheaf points

## M-4 PDFCS OPERATING CONTROLS AND INDICATORS - CONTINUED

### NOTE

The alerts marked below with an asterisk will result in an “OK TO SHOOT? “YES”, “NO” short error message to the PDFCS operator.

If the fire mission is a multiple phase fire mission and the violation occurs for only one phase, the violation and error message will be displayed before continuing the mission.

If the fire mission has multiple aimpoints and the violation does not apply to every aimpoint, the violation and error message will be displayed for each aimpoint that has the violation, when the data for that aimpoint is displayed the first time.

The “SAFE FIRE AREA VIOLATION” warning shall be the first to appear and shall reappear after all other warnings have been cleared. The additional information in this field shall remain until it is superseded or no longer applies.

(2) Blank field 2 = displayed when none of the following apply
SAFE FIRE AREA VIOLATION = The aimpoint or trajectory termination is outside of the received Safe Fire Area.*
REMEMBER TO UPDATE INVENTORY = Direct or manual fire mission and none of the following apply
WARNING TUBE IS NOT IN LAY POSITION = WC is operational and the tube is not in the lay window
TUBE MUST BE LAID MANUALLY = WC is not operational
CALL FDC IF ROUND IN TUBE = Awaiting tube clear and crew not authorized to fire
PRESS SHOT OR CLEAR TO ACK CEASELOAD = PDFCS has received a ceaseload request
SECTOR OF FIRE VIOLATION = Gun-target line is outside the defined sector of fire*
SITE VIOLATION = Firing parameters violate defined mask*
INSUFFICIENT AMMO SHELL/FUZE/PROP = Insufficient inventory quantities*
INSUFFICIENT AMMO SHELL/FUZE = Insufficient inventory quantities*
INSUFFICIENT AMMO SHELL/PROP = Insufficient inventory quantities*
INSUFFICIENT AMMO FUZE/PROP = Insufficient inventory quantities*
INSUFFICIENT AMMO SHELL = Insufficient inventory quantities*
INSUFFICIENT AMMO FUZE = Insufficient inventory quantities*
INSUFFICIENT AMMO PROP = Insufficient inventory quantities*
MAX TUBE EL EXCEEDED = Computed QE exceeds the defined maximum tube elevation.*
MINIMUM QE VIOLATED = The Gun Tube has violated the minimum QE as entered by the PDFCS operator. Enter Minimum Firing QE Display.*

## M-4 PDFCS OPERATING CONTROLS AND INDICATORS - CONTINUED

(3) Blank field 3 indicates that none of the following apply
FIRE WHEN READY = Fire at will
UNDER VOICE ORDERS = Manual fire mission
COMPUTING DO NOT LOAD = PDFCS computing or waiting for operator response
DO NOT LOAD = Do not load mission
LOAD LAY THEN PRESS READY = At my command or Copperhead mission
WAIT FOR COMMAND = At my command after ready
WAIT NNN SECONDS = Time to fire mission or continuous interval mission. NNN maximum number is 999. If greater than 999 seconds = WAIT *** SECONDS
WAIT NNN SECONDS - FDC COMP = WAIT NNN SECONDS = Time to fire mission or continuous interval mission. NNN maximum number is 999. If greater than 999 seconds = WAIT *** SECONDS
FIRE = Command to fire
FPF END OF MISSION = EOM of ceaseload during FPF
EARLY END OF MISSION = EOM received after load but before all rounds fired
CEASELOAD = Ceaseload received after load but before all rounds fired

(4) Blank field 4 indicates that none of the following apply
SHOT = AFCS requires notification of round fired
READY = AFCS requires notification of operator ready to fire

(5) Blank field 5 indicates that none of the following apply
CLEAR = AFCS requires notification of tube clear
OTHER VLY = Other volley information is available for operator viewing

(6) Blank field 6 indicates that fire mission is not active
ABORT = Fire mission other than direct or manual active
EOM = Direct or manual mission active

(7) "MV" = A valid MV was received from the MVS
"BAD MV" = An MV message was received from the MVS, but the data was not valid
"NO MV" = No MV message was received from the MVS

The following alerts shall appear if the operator presses the LOAD or LAY keys and the tube transitions across the minimum quadrant elevation:

"MINIMUM QE VIOLATED" "ACK" - The gun tube has violated minimum QE entered by the operator.

"MINIMUM QE NO LONGER VIOLATED" "ACK" - The gun tube no longer violates the minimum QE entered by the operator.

A type 2 audio alert shall be generated until the "ACK" key is pressed.

## M-4 PDFCS OPERATING CONTROLS AND INDICATORS - CONTINUED

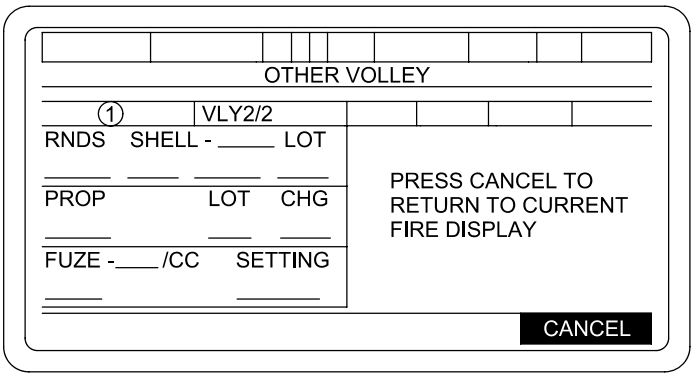


06pc243t

Listed below are the legal values for each field of the OTHER VOLLEY display:

RNDS = 1..99
SHELL = Shell model and mnemonic
SHELL LOT = A..Z
PROP = Propellant model
PROP LOT = A..Z
CHG = Propellant charge designator
FUZE = Fuze model, Country and mnemonic
SETTING = Computed fuze setting, “PD” or “DELAY”

Instructions which could appear on the OTHER VOLLEY display:

1 Blank field 1 = Fire mission is not a sheaf
SHEAF PT = This gun is participating in a multigun sheaf
SHEAF a/b = This gun is conducting a single gun sheaf where:
a = Current aimpoint number
b = Number of sheaf points

## M-4 PDFCS OPERATING CONTROLS AND INDICATORS - CONTINUED

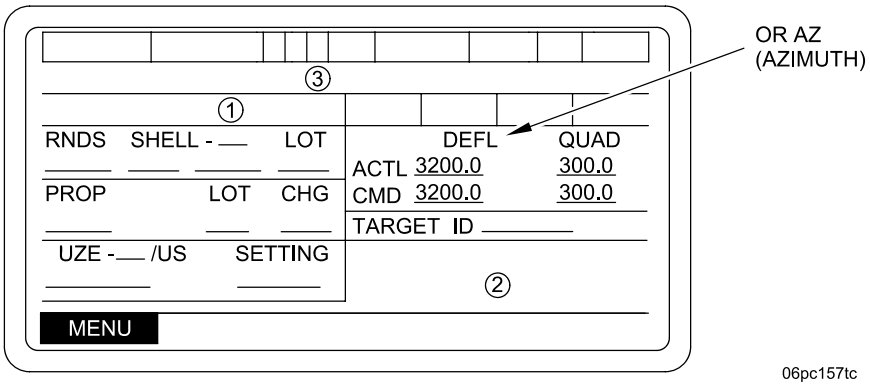


Listed below are the legal values for each field of the SECTION IN ORDER display:

RNDS = Number of rounds remaining to fire 0..99 or blank
SHELL = Shell model and mnemonic or blank
SHELL LOT = A..Z or blank
PROP = Propellant model
PROP LOT = A..Z or blank
PROP CHG = Propellant charge designator (see Table M-1) or blank
FUZE = Fuze model and mnemonic
FUZE SETTING = Computed fuze setting, “PD” or “DELAY”
DEFL (or AZ) = 0.0..6399.9 mils
QUAD = -200.0..+1600.0 mils
TARGET ID = FPF/PRI target identification if a target exists; otherwise blank

## M-4 PDFCS OPERATING CONTROLS AND INDICATORS - CONTINUED

Instructions and warnings which could appear on the SECTION IN ORDER display:

(1) Blank
COMPUTING FPF/PRI
NO FPF/PRI EXISTS
UNABLE TO COMPUTE
SECTOR VIOLATION
MASK VIOLATION
INSUFFICIENT AMMO
NO FUZE INVENTORY
NO PROJ INVENTORY
NO PROP INVENTORY
BAD PROJ LOT/MODEL
NO AMMO INV COMBO
INVALID AMMO COMBO
INSUFFICIENT RANGE
NO SOLUTION
NOT FFE TYPE MISSION
UNASSIGNED FPF/PRI
TARGET TOO CLOSE
TUBE EL VIOLATION

(2) SECTION IN ORDER AT FIRE POINT
SECTION IN ORDER WITHIN FIRE AREA
SECTION IN ORDER IN ROUTE POINT (Only displayed when the destination is not reached for a Fire Point or a Fire Area)

(3) DO NOT MOVE/DO NOT LOAD
DO NOT MOVE
MOVES ALLOWED
MOVES ALLOWED DO NOT LOAD

### Table M-1 Charge Displayed Based on Propellant Model

| Charge Displayed | Based on propellant model |
|---|---|
| 3G, 4G, 5G | M3, M3A1, M3A1BG, M3C2, DM62 |
| 3G, 4G, 5G, 6G | MLE56 |
| 6W, 7W, 8W, 9W, 9BW | MLE69 |
| 3W, 4W, 5W, 6W, 7W | M4A1, M4A2, M4C3, M4C4, DM42, DM42B1, NM23 |
| 8 | M119A1, EBO-5 |
| 7R | M119A2, M119A2BG, NR13C1 |
| 8R | M203 |
| 8S | M203A1 |
| 1L, 2L | M231 |
| 3H, 4H, 5H | M232 |

## M-4 PDFCS OPERATING CONTROLS AND INDICATORS - CONTINUED

(16) Field 16, Function Key Label – This block is used to identify the function of the four soft keys.

Soft key messages and task actions are also displayed in this area to give the PDFCS operator a means of keeping track of various PDFCS related actions during Fire Control operation. Typical messages are shown below:

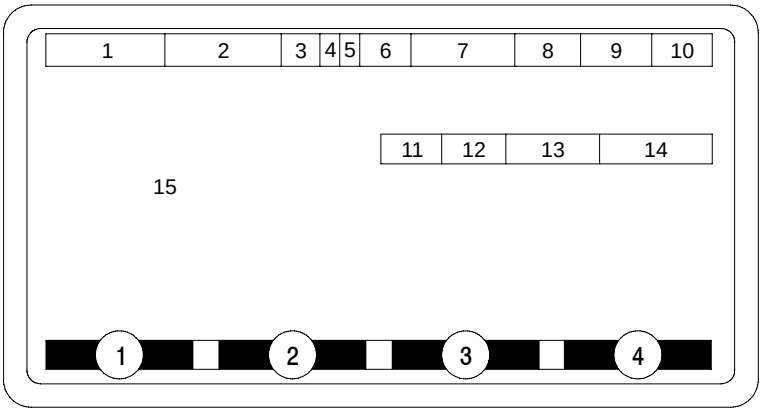


06pc088m

(1) Function Key 1, indicates what may appear in this field.
SELECT
NEXT MSG
+/-
MARK
ADJ
PREV
MENU
VERIFY
PREV

(2) Function Key 2, indicates what may appear in this field.
USE ALL
FINISHED
NEXT PAGE
+/-
FINISHED
USE LOCAL
FFE1
INVENTORY
ARRIVED
UPDATE EFC
CLEAR

(3) Function Key 3, indicates what may appear in this field.
CHECK
DELETE
YES
USE GPS
EMPLACE
STEERTO
FFE2
SEND
CLEAR
EXPECTED

(4) Function Key 4, indicates what may appear in this field.
CANCEL
ACK
EOM
NO
CONTINUE
MOVING
EXIT
ABORT

URGENT MESSAGE

"AFCS CHECKFIRED", "ACK"

## M-4 PDFCS OPERATING CONTROLS AND INDICATORS - CONTINUED

HIGH PRIORITY MESSAGES

"GUN SW FAULT", "ACK"
"FIRE MISSION RECEIVED", "ACK"
"POWER FAILURE SHUTDOWN", "ACK"
"ON AUX POWER START VEHICLE", "ACK"
"AUX BATTERY NOT CONNECTED", "ACK"
"VEHICLE AND AUX POWER OK", "ACK"
"NAV OUT-NSP POWER UP BIT", "ACK"
"NAV EXCESSIVE RATE RESTART REQ", "ACK"
"ALIGN ABORTED RESTART REQD", "ACK"
"MAP UPDATED NAV UPDT REQUIRED", "ACK"
"MAP/NAV CONFLICT UPDATE NAV", "ACK"
"OVERIDE AZ LIMITS", "YES", "NO"
"NAV OUT-DRU BIT FAIL", "ACK"
"NAV OUT-DRU DISCONNECT", "ACK"
"NAV OUT-NSP DISCONNECT", "ACK"
"AUX POWER LOW", "ACK"
"FIRE MISSION RCVD", "ACCEPT", "REJECT"
"MAP DATUM UPDATE REQUIRED", "ACK"
"NAV OUT-DRU INERTIAL FAIL", "ACK"
"NAV OUT-DRU OP FAIL", "ACK"
"MOVE MISSION RECEIVED", "ACK"

LOW PRIORITY MESSAGES

"INVALID SOFTWARE CONFIGURATION", "ACK"
"NAV POS UPDATE REQUIRED", "ACK"
"NAV POS UPDATE NO LONGER REQ", "ACK"
"ZUPT REQUIRED", "ACK"
"ZUPT NO LONGER REQUIRED", "ACK"
"MOTION DURING POS UPDATE", "ACK"
"POS UPDATE INTERRUPTED", "ACK"
"POS UPDATE N/E EXCESSIVE", "ACK"
"POS UPDATE N/E RJTD", "ACK"
"POS UPDATE ALTITUDE EXCESSIVE", "ACK"
"POS UPDATE ALTITUDE RJTD", "ACK"
"NAV RESTART RJTD VEH MOVING", "ACK"

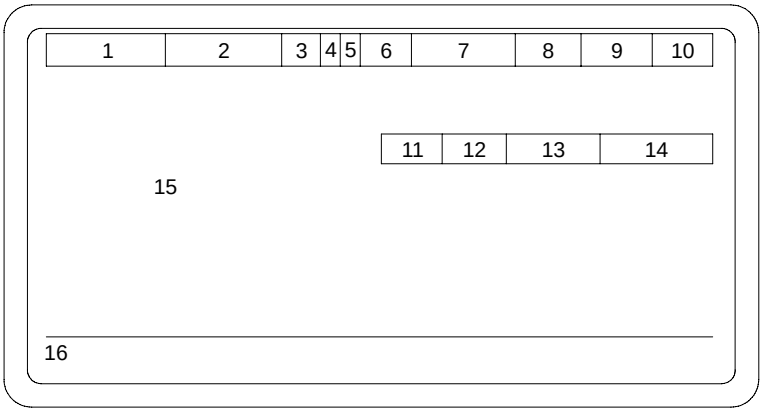


06pc088m

## M-4 PDFCS OPERATING CONTROLS AND INDICATORS - CONTINUED

LOW PRIORITY MESSAGES - CONTINUED

"NET ADDR RJTD NEW SUBSBR FILE", "ACK"
"INVALID OPERATIONAL MODE", "ACK"
"NET CONFG UPDTE RJTD FM ACTIVE", "ACK"
"NET ADDR UPDTE RJTD FM ACTIVE", "ACK"
"NAV RESTART RJTD FM ACTIVE", "ACK"
"UPDATE RJTD WRONG NAV MODE", "ACK"
"AFCS COMMO OUT XMIT RJTD:, "ACK"
"CLOCK UPDATE RJTD FM ACTIVE", "ACK"
"NAV RESTART RJTD BAD POS", "ACK"
"WPN OUT", "ACK"
"WC SUBSYSTEM OUT", "ACK"
"TUBE TEMP SENSOR OUT", "ACK"
"COMMO OUT", "ACK"
"NETWORK COMMO OUT", "ACK"
"POS UPDATE RJTD BAD POS", "ACK"
"POS UPDATE RJTD HOWITZER MOVG", "ACK"
"POS UPDATE RJTD FM ACTIVE", "ACK"
"POS UPDATE RJTD VEH MOTION", "ACK"
"RESTART RJTD NAV OUT", "ACK"
"POS UPDATE RJTD WRONG NAV MODE", "ACK"
"NET BUSY AMMO", "RETRY", "NO RETRY"
"NET BUSY REQ AMMO", "RETRY", "NO RETRY"
"NET BUSY CHECKFIRE", "RETRY", "NO RETRY"
"NET BUSY DESIGNATE", "RETRY", "NO RETRY"
"NET BUSY FREE TEXT", "RETRY", "NO RETRY"
"NET BUSY VEH STS", "RETRY", "NO RETRY"
"NET BUSY REQ VEH STS", "RETRY", "NO RETRY"
"NET BUSY REQ INIT", "RETRY", "NO RETRY"
"NET BUSY SITE DATA", "RETRY", "NO RETRY"
"NET BUSY REQ SITE", "RETRY", "NO RETRY"
"NET BUSY REQ MOV ORD", "RETRY", "NO RETRY"
"NET BUSY MTO TOF", "RETRY", "NO RETRY"
"NET BUSY MTO DENY", "RETRY", "NO RETRY"
"POSITION UPDATE RJTD NAV OUT", "ACK"
"NET BUSY REQ MVV", "RETRY", "NO RETRY"
"NET BUSY MVV", "RETRY", "NO RETRY"

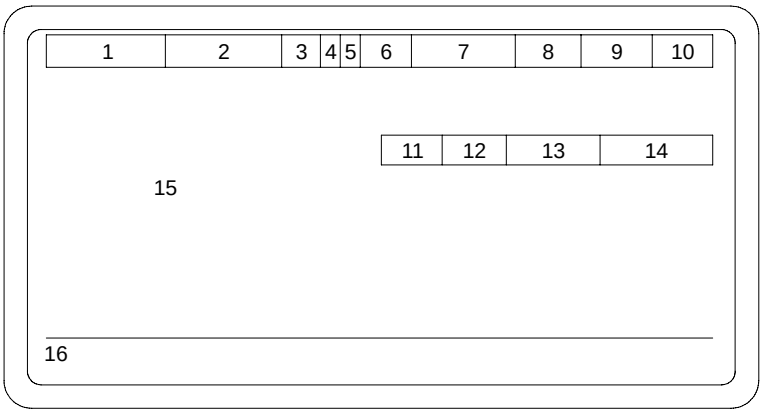


06pc088m

## M-4 PDFCS OPERATING CONTROLS AND INDICATORS - CONTINUED

LOW PRIORITY MESSAGES - CONTINUED

"NET BUSY READY", "RETRY", "NO RETRY"
"NET BUSY ROUND COMP", "RETRY", "NO RETRY"
"NET BUSY SHOT", "RETRY", "NO RETRY"
"NET BUSY SPLASH", "RETRY", "NO RETRY"
"NET BUSY TARGET FILE", "RETRY", "NO RETRY"
"NET BUSY UTE BAT", "RETRY", "NO RETRY"
"NO ACK AMMO", "RETRY", "NO RETRY"
"NO ACK REQ AMMO", "RETRY", "NO RETRY"
"NO ACK CHECK FIRE", "RETRY", "NO RETRY"
"NO ACK DESIGNATE", "RETRY", "NO RETRY"
"NO ACK FREE TEXT", "RETRY", "NO RETRY"
"NO ACK VEH STS", "RETRY", "NO RETRY"
"NO ACK REQ VEH STS", "RETRY", "NO RETRY"
"NO ACK VEH INIT", "RETRY", "NO RETRY"
"NO ACK SITE DATA", "RETRY", "NO RETRY"
"NO ACK REQ SITE DATA", "RETRY", "NO RETRY"
"NO ACK REQ MOVE ORD", "RETRY", "NO RETRY"
"NO ACK MTO TOF", "RETRY", "NO RETRY"
"NO ACK MTO DENY", "RETRY", "NO RETRY"
"NO ACK MVV", "RETRY", "NO RETRY"
"NO ACK REQ MVV", "RETRY", "NO RETRY"
"NO ACK READY", "RETRY", "NO RETRY"
"NO ACK ROUND COMP", "RETRY", "NO RETRY"
"NO ACK SHOT", "RETRY", "NO RETRY"
"NO ACK SPLASH", "RETRY", "NO RETRY"
"NO ACK TARGET FILE", "RETRY", "NO RETRY"
"NO ACK UTE BAT", "RETRY", "NO RETRY"
"PDI WARNING RECEIVED", "ACK"

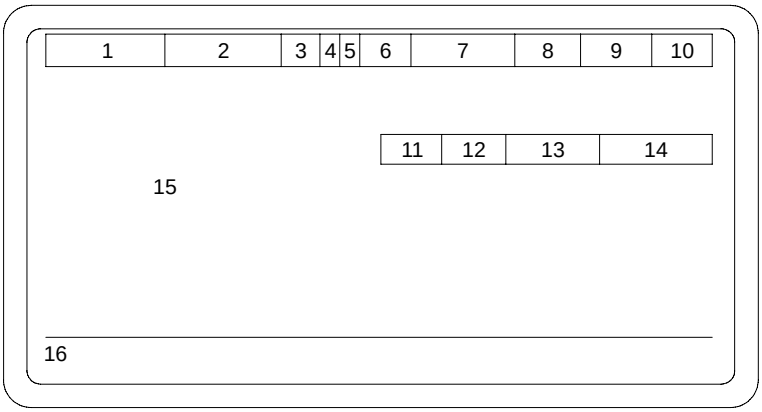


06pc088m

## M-4 PDFCS OPERATING CONTROLS AND INDICATORS - CONTINUED

LOW PRIORITY MESSAGES-CONTINUED

"PROP TEMP UPDATE PENDED", "ACK"
"AMMO INVENTORY UPDATE PENDED", "ACK"
"SITE DEFINITION UPDATE PENDED", "ACK"
"DIRECT FIRE RJTD NAV NOT INIT", "ACK"
"DIRECT FIRE RJTD WPN OUT", "ACK"
"DIRECT FIRE RJTD OUTSIDE MAP", "ACK"
"DIRECT FIRE RJTD MAP PENDING", "ACK"
"DIRECT FIRE RJTD IN CHECKFIRE", "ACK"
"DIRECT FIRE RJTD FM ACTIVE", "ACK"
"MANUAL COMMANDS RJTD FM ACTIVE", "ACK"
"MANUAL COMMANDS RJTD CHECKFIRE", "ACK"
"SIMULATED NAV FAILURE", "CLEAR"
"SIMULATED ELECTRICAL FAILURE", "CLEAR"
"SIMULATED HYDRAULIC FAILURE", "CLEAR"
"SIMULATED COMMO FAILURE", "CLEAR"
"SIMULATED WPN FAILURE", "CLEAR"
"SIMULATED NAV FAILURE", "ACK"
"SIMULATED ELECTRICAL FAILURE", "ACK"
"SIMULATED HYDRAULIC FAILURE" , "ACK"
"SIMULATED COMMO FAILURE", "ACK"
"SIMULATED WPN FAILURE", "ACK"
"SIMULATED FAILURES CLEARED", "ACK"
"MOVE RJTD DEST NOT IN MAP", "ACK"
"MOVE RJTD NO MAP", "ACK"
"MOVE RJTD MAP PENDING", "ACK"
"PRESS ACK WHEN TUBE STOWED", "ACK"
"VEHICLE MOTION SENSOR OUT", "ACK"
"PDI OUT OR PDI BUS OUT", "ACK"
"DIRECT FIRE RJTO TGT COMP ERR", "ACK"
"NO BALLISTIC SOLUTION", "ACK"

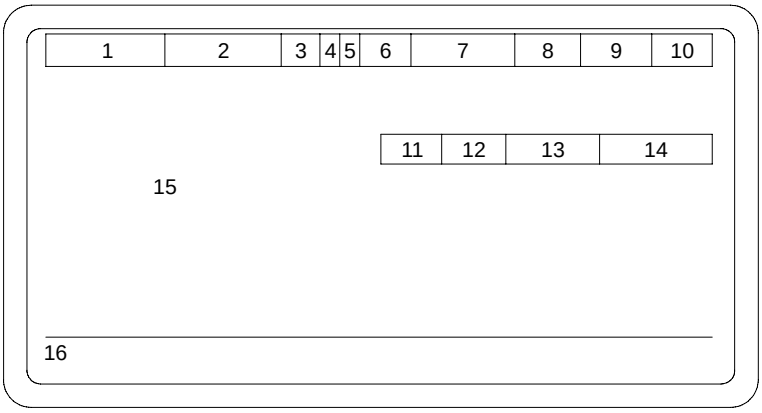


06pc088m

## M-4 PDFCS OPERATING CONTROLS AND INDICATORS - CONTINUED

LOW PRIORITY MESSAGES-CONTINUED

"PROP TEMP UPDATE REQUIRED", "ACK"
"VEHICLE MOTION SENSOR GOOD", "ACK"
"DRU OVERTEMP", "ACK"
"DRU NO LONGER OVERTEMP", "ACK"
"ZONE BOUNDARY CROSSED", "ACK"
"OK TO MOVE OR SHOOT", "ACK"
"FIRE CONTROL ALIGN REQUIRED", "ACK"
"EMBEDDED TRAINING OUT", "ACK"
INVALID SOFTWARE CONFIGURATION", "ACK"
MVS OUT OR MVS BUS OUT", "ACK"
MVV DATABASE ALMOST FULL", "ACK"
MVV DATABASE FULL DATA LOST", "ACK"
"GPS OUT - PLGR DISCONNECT", "ACK"
"GPS CONNECTED", "ACK"
"GPS OUT - PLGR FAILED", "ACK"
"GPS OPERATIONAL", "ACK"
"GPS ANTENNA FAULT", "ACK"
"GPS ANTENNA OK", "ACK"
"PLGR UNKEYED", "ACK"
"INP/GPS DELTA TOO LARGE", "ACK"
"INP/GPS N/E EXCESSIVE", "ACK"
"INP/GPS N/E REJECTED", "ACK"
"INP/GPS ALT EXCESSIVE", "ACK"
"INP/GPS ALT REJECTED", "ACK"
"POSITION UPDATE BEYOND ZONE", "ACK"
"BORESIGHT UPDT RJTD VEH MOVING", "ACK"
"RESTART REQUIRED", "ACK"
"POSITION UPDATE REQUIRED", "ACK"
"DRU CONNECT", "ACK"
"INSUFFICIENT Y CODE SVS", "ACK"
"MINIMUM QE VIOLATED", "ACK"
"MINIMUM QE NO LONGER VIOLATED", "ACK"
"CHK DATABASE BAD DATA DETECTED", "ACK"
"DUPLICATE IP ADDR", "ACK"
"DUPLICATE IP ADDR SUBFIELD 4", "ACK"
"DUPLICATE URN", "ACK"
"DUPLICATE ADDRESS", "ACK"
"SHUTDOWN TO RE-ENABLE COMMO", "ACK"
"REUSED AFCS IP - POWERDOWN REQ", "ACK"

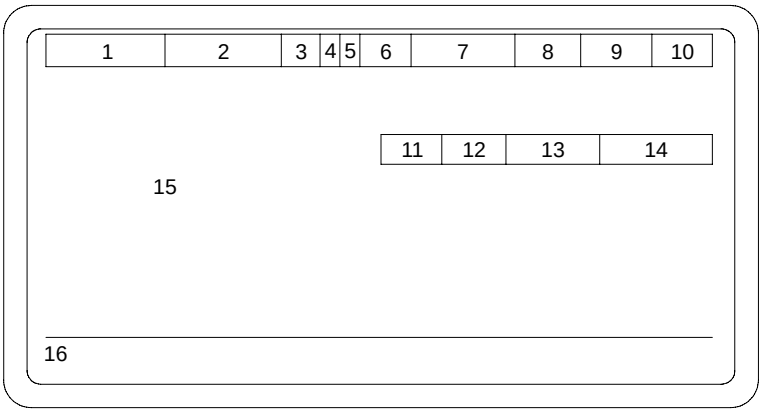


06pc088m

## M-5 DC POWER MESSAGES.

Three Auxiliary Power messages can appear on any menu being displayed on the PDU. Operator actions for any message will be the same regardless of the menu on which it is displayed.

### M-5.1 On Auxiliary Power.

If vehicle battery voltage drops to a point below that needed by the Power Conditioner Unit (PCU-2) to operate the PDFCS, the PCU-2 will automatically switch to auxiliary power (backup batteries) to maintain PDFCS operation. When the switch to auxiliary power occurs, an audible alert will be sounded over the intercom, and a visual alert will be displayed at the bottom of the menu.

**CAUTION**

Prolonged operation on auxiliary power may cause the PDFCS to shut down automatically.

At this time, the vehicle engine must be started to recharge the vehicle batteries.

The operator must press the soft key under ACK to silence the audible alarm and eliminate the message.

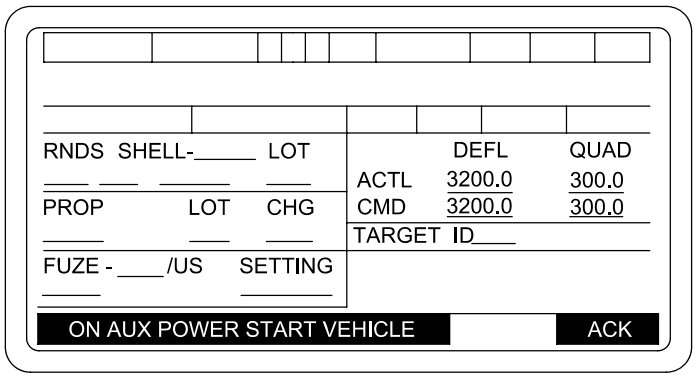


06pc157td

## M-5 DC POWER MESSAGES - CONTINUED

### M-5.2 Auxiliary Power Not Available.

If the auxiliary power batteries are not functional (e.g., low, damaged, or disconnected), a visual alert will be displayed at the bottom of the menu.

The operator must press the soft key under ACK to eliminate the message. At this time, the vehicle engine must be started and kept running to ensure PDFCS operation until auxiliary power is restored.

**NOTE**

This message can also appear during BIT.

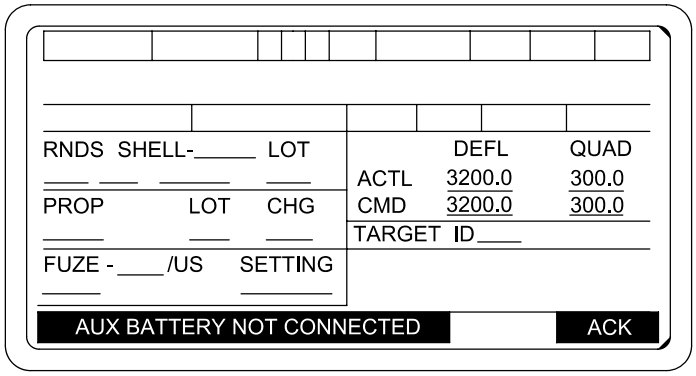


06pc158ta

### M-5.3 Vehicle and Auxiliary Power OK.

When the vehicle battery voltage rises sufficiently, the PCU-2 will automatically switch to vehicle power. When the switch occurs, a visual alert is displayed at the bottom of the menu as shown below.

The operator must press soft key under ACK to eliminate the message.

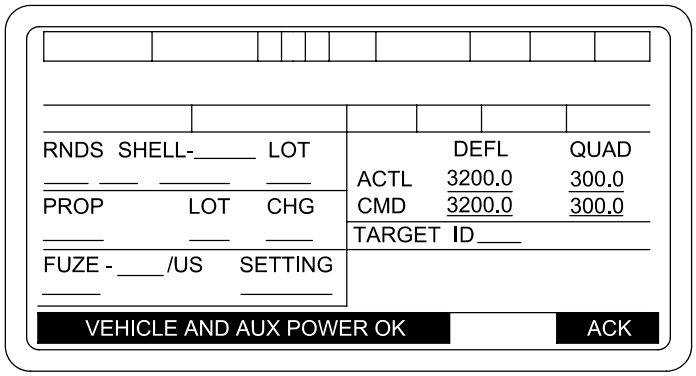


06pc159ta

# M-6 PDFCS INITIALIZATION.

## M-6.1 System Power-Up.

**WARNING**

When operating the PLGR on external power with BA-5800 lithium battery installed, the battery may explode. Ensure battery is removed before connecting power cable to prevent serious injury or death.

**NOTE**

- AFCS and PDFCS are used interchangeably when viewing PDFCS software screens. AFCS and PDFCS will appear in the on-vehicle software screens and the screens in the technical manual. PDFCS will be used within the text of the technical manual.
- PMVS must be installed and connected prior to turning the vehicle MASTER power switch ON.
- PLGR should be installed and powered prior to turning on the DU of the PDFCS keypad in order for the PDFCS to use the PLGR data.
- The following steps must be completed prior to POWERING UP and INITIALIZATION of the PDFCS.

a. Outside the howitzer:
   1. Left front drive sprocket must be within 1 meter of SCP.
   2. Gun tube in travel lock.
   3. PMVS connections verified.
   4. FM VOICE/DIGITAL Radio antennas are properly mounted, cables and ground connections verified.
   5. PLGR antenna cable connections verified.

b. Inside the howitzer:
   1. Turret lock in “LOCKED” position.
   2. 1553 BUS terminator connection verified.
   3. PLGR ground connection verified.
   4. PLGR installed.
   5. Set MASTER switch to ON.
   6. Ensure 10 PCU-2 switches are ON.
   7. Turn PLGR ON, FILL verified.
   8. Turn radios ON, and perform VOICE radio check.
   9. Idle engine at 1000 to 1200 RPMs.
   10. Make sure TRAINING switch on PDFCS keypad is OFF.

# M-6 PDFCS INITIALIZATION - CONTINUED

## M-6.1 System Power-Up - Continued

With the PLGR in the PLGR mount and all external cables attached, press the ON/BRT key on the PLGR key pad. The PLGR should power up automatically and perform its self-test (BIT). Operate the PLGR in accordance with the PLGR TM 11-5825-291-13.

If the PLGR does not have a current key (i.e. the PLGR was previously “zeroized”, newly installed or the key has expired), then load a valid key in accordance with the PLGR TM 11-5825-291-13, Section 3.6.

**NOTE**

To load a key, the DRUH must be off, or the P4 DRUH-PLGR Signal Connector must be disconnected to cause a PLGR COM FAIL. Simple re-attachment of P4 DRUH-PLGR Signal Connector after PLGR keying will automatically cause DRUH-PLGR communications to resume if DRUH is on.

If the PLGR antenna has a clear view of the sky, turn PLGR on.

If the antenna’s view of the sky is blocked (e.g. the vehicle is in a building, under tree cover or parked next to a large structure), move vehicle until the PLGR antenna is clear.

If the vehicle can not be moved, keep PLGR turned off until the vehicle can be moved to a location with a clear view of the sky.

**NOTE**

- If the PLGR is off, the Navigation System will still accept initialization data from the PDFCS for inertial operation and the Navigation System will operate as before.
- Guidelines for conditions and times for the PLGR to obtain position data acceptable by the PDFCS.

c. If the antenna has a clear view of the sky and PLGR has a valid position, current GPS time, current GUV key, and has stored a current satellite almanac, PLGR will be acceptable for use in about 3 minutes following the first turn-on of the day. It will take about 90 seconds for subsequent turn-ons. These are the normal operating conditions.

d. If the antenna has a clear view of the sky and PLGR has a current GUV key but PLGR doesn’t have a valid position, current GPS time, or current satellite almanac, it may take up to 20 minutes after turn-on for the PLGR to output data of acceptable accuracy.

# M-6 PDFCS INITIALIZATION - CONTINUED

## M-6.1 System Power-Up - Continued

e. If the PLGR has a valid position, current GPS time, current key, and current satellite almanac, but the antenna is masked from a clear view of the sky when PLGR is turned on, it may take up to 20 minutes to get acceptable data after the vehicle is moved to a location with a clear view of the sky. This results from the PLGR initiating a search for all possible satellites if it can't lock on to those expected, for its current position, time, and almanac, within a reasonable time interval.

f. If the PLGR doesn't have a current key, its data won't be acceptable for use by the PDFCS. However, assuming a clear view of the sky, it can be turned on to initialize position, time, and satellite almanac in about 20 minutes. Then when a valid key is located, the PLGR will be ready to go within three minutes.

**NOTE**

PMVS must be installed and connected prior to turning the vehicle MASTER power switch ON.

Make sure TRAINING switch on PDFCS keypad is OFF. Set circuit breaker on PDFCS CPU to ON. Press and hold POWER button to PDFCS PDU until LEDs illuminate. Set POWER switch on PDFCS keypad to ON. The normal PDFCS initialization screens will be displayed (see TM 11-7-10-326-10). In approximately 3 minutes the PDFCS window will open with a blank screen, followed by the POWER UP STATUS screen.

**NOTE**

- The time lapse between first three screens can range from 3 to 5 minutes.
- If screen stays blank for more than 7 minutes, power down system.

A SYSTEM VERIFICATION FAILURE screen may be displayed only if there is an incompatibility between hardware and software.

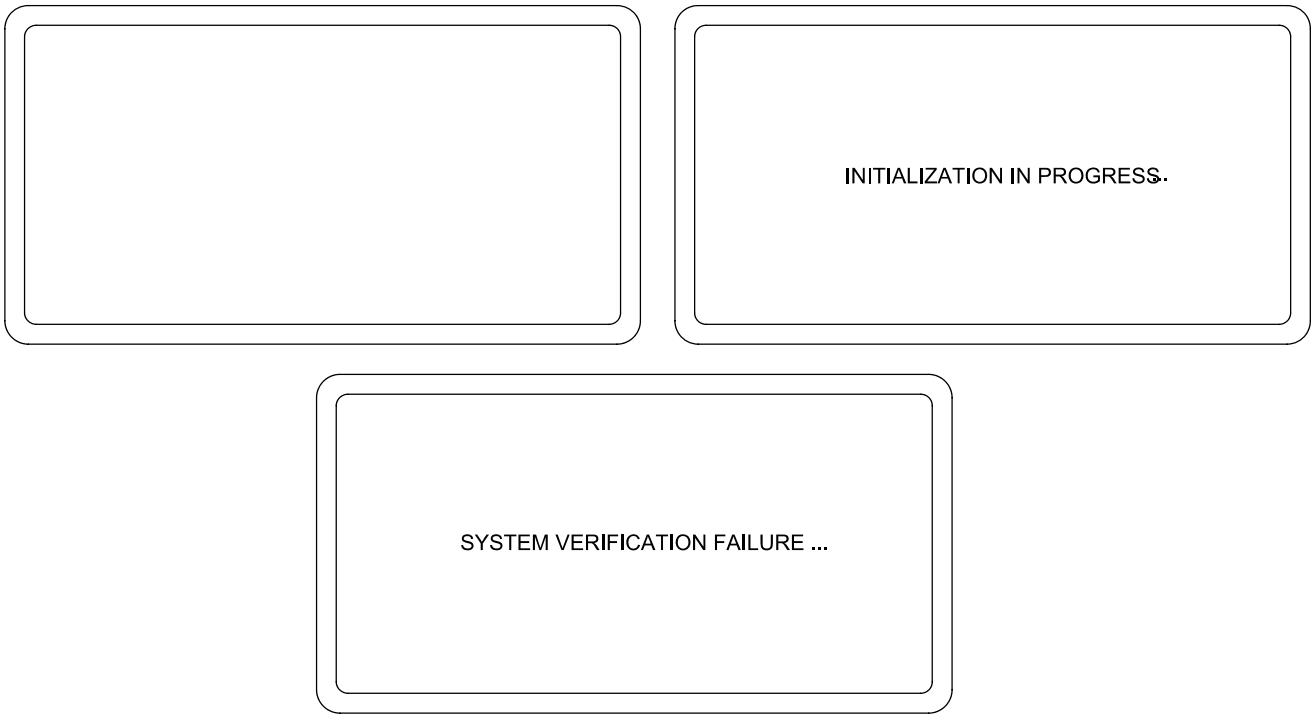


06pc272t

# M-6 PDFCS INITIALIZATION - CONTINUED

## M-6.1 System Power-Up - Continued

After the PDFCS powers up, the PLGR screen should read:

REMOTE CONTROL
Only ZEROIZE key
activated

At this point the PLGR key pad will become inactive. The only PLGR operation allowed using the key is EMERGENCY ZEROIZE.

If this message is not displayed on the PLGR screen, and the Low Priority Message “GPS OUT - PLGR DISCONNECTED” is not displayed on the PDU, ensure that the DRUH-PLGR Signal Connector (P4) plug on the W17A Cable is connected and secure. Once this PLGR screen is displayed, proceed with system initialization.

### NOTE

- NAV SUBSYSTEM includes: VMS, DRUH, VMS Modems
- PCU-2 SUBSYSTEM includes: PCU-2 and both Back-up Batteries.
- The switches on the PCU-2 are circuit breakers. They should be left ON at all times, so they will not wear out from being turned off and on constantly.

This screen displays the subsystems that are checked by BIT. As the subsystems are checked, the dashed lines will change to a subsystem status (OK, DEGRADED, OUT, - - ). The - - appears on the MVS status line when the PDFCS could not be connected to the MVS, on the PCU status line to indicate a PDCU failure that prevents PCU status from being determined, or on the keypad status line to indicate a PDCU failure that prevents KEYPAD status from being determined. This screen also identifies the system software version.

### NOTE

PCU and PCU-2 are used interchangeably when viewing PDFCS software screens. PCU will appear in the software screens. PCU-2 will be used in the text portion of this technical manual when referring to the physical equipment.

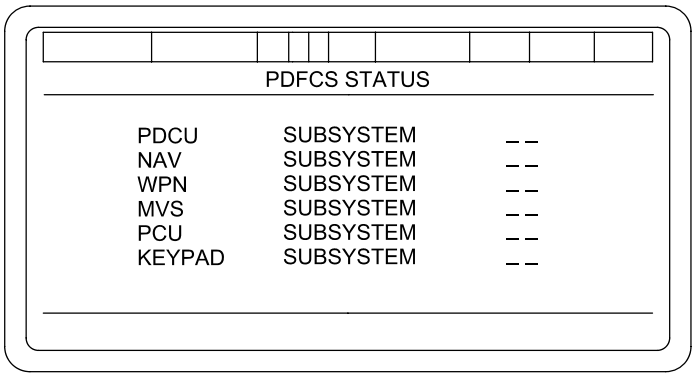


06pc071mb

# M-6 PDFCS INITIALIZATION - CONTINUED

## M-6.1 System Power-Up - Continued

In the event of a failure during POWER UP STATUS, the message “DEGRADED – ACK TO CONTINUE” will be displayed on the bottom line of the PDU. To continue, depress soft key under ACK. After the self-test is complete, SELECT OPERATIONAL MODE menu is displayed.

**NOTE**

- The PDFCS GPS Synchronization box may be displayed, inhibiting use of the PDFCS keypad. To hide the box and enable the PDFCS keypad, right click on the “GPS” button on the Task Bar with the PDFCS keyboard mouse.
- If all systems are OK, the screen below will not be shown.

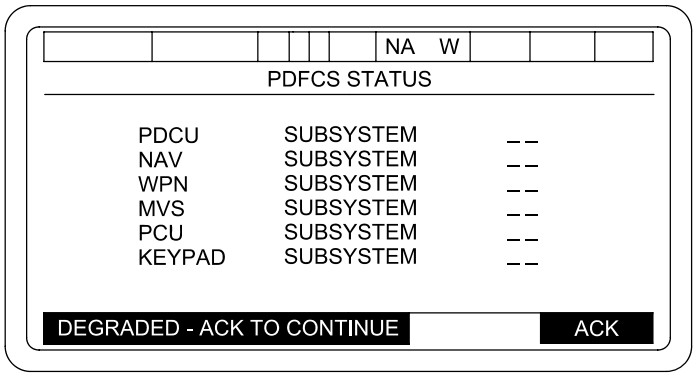


06pc072mc

**NOTE**

If PDU contains an incorrect configuration, the PDFCS will not allow the operator to select normal operations until a correct PDU software configuration is downloaded.

When configuration verification checking indicates that the executed software configuration is not the same as the acquired software configuration, a short error message “INVALID SOFTWARE CONFIGURATION”, “ACK” will appear on the soft key label line of the PDU.

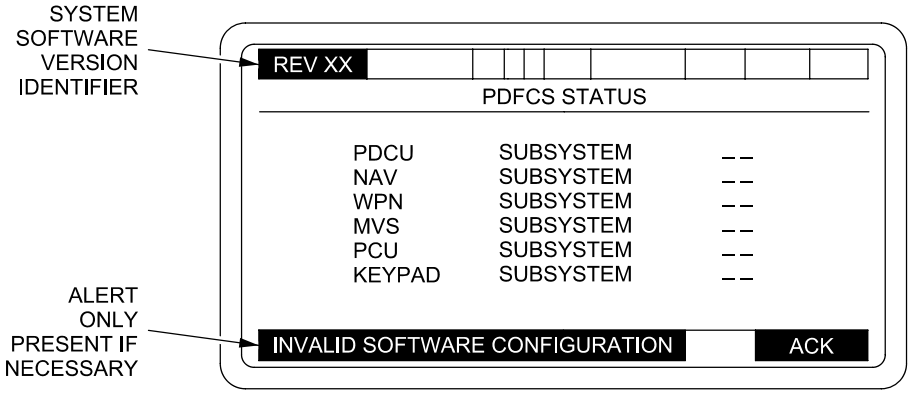


06pc073mg

## M-6 PDFCS INITIALIZATION - CONTINUED

### M-6.2 Initializing.

When a Fire Control Alignment is required by the PDFCS, the alert “FIRE CONTROL ALIGN” “REQ”, “ACK” will appear on the soft key label line of the PDU. This alignment must be accomplished before INITIALIZATION of the PDFCS can be completed. If a full Fire Control Alignment including SYSTEM RESTART or Power Cycle is not completed when it is requested, the PDU FAULT lamps and ACU BIT lamp will illuminate and remain lit.

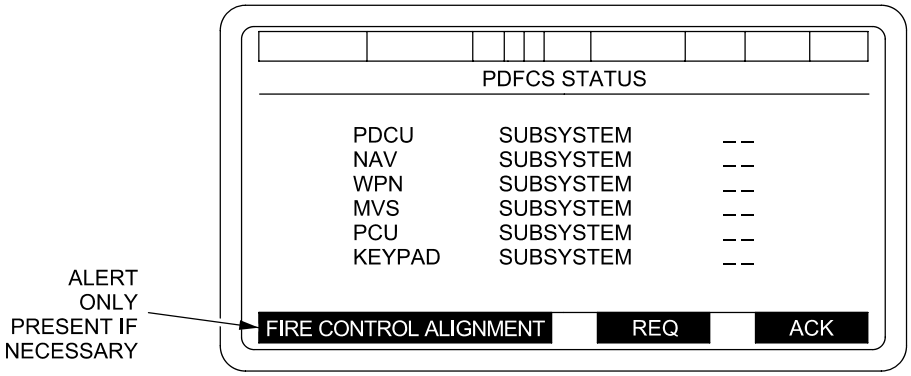


06pc072md

When the message is acknowledged, the PDFCS will proceed to the “SELECT OPERATIONAL MODE” menu. To view detailed software configuration information for each LRU, MAINTENANCE should be selected, IAW procedure in para M-9.1.

**NOTE**

After an orderly shutdown, go to para M-6.3. However, if a catastrophic failure happens within the system, follow the procedures below.

When initializing the PDFCS, communications parameters (NETWORK setup display) are entered to establish digital communications. Data to align the navigation system to a known location must also be entered at initialization. Other data to establish date/time, ammunition supply and propellant temperature, TOT response time, load elevation, and sector of fire must be entered before the initialization process is complete. All this data is input during NORMAL OPERATIONS Mode which is selected from the SELECT OPERATIONAL MODE menu.

**NOTE**

It is possible that an ALERT(S) may appear on the bottom line of the SELECT OPERATIONAL MODE screen. To continue, press the “ACK” soft key.

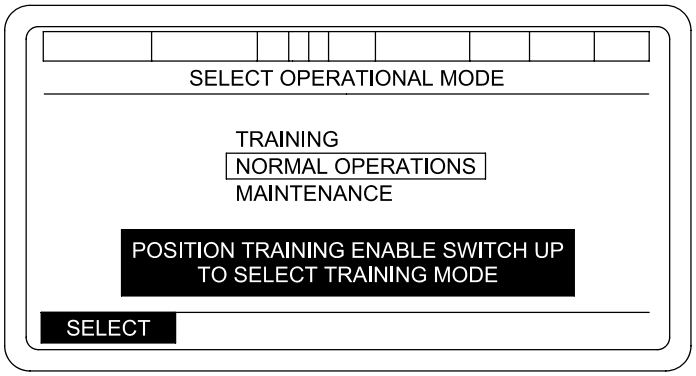


06pc094ma

# M-6 PDFCS INITIALIZATION - CONTINUED

## M-6.2 Initializing - Continued

a. Mode Selection. Set TRAINING ON/OFF switch to OFF when selection other than TRAINING is required. Box in NORMAL OPERATIONS mode. Press SELECT key. NETWORK menu will be displayed. The operator has the option of storing up to six NETWORK configurations.

b. NETWORK display. Upon initialization of a previously configured PDFCS, the display lists all previously configured network configurations.

Initialization of a virgin PDFCS, all Communications Configurations, “CFG”, shall be set to “---” and all other columns will be blank.

Only one network configuration will be active at any one time. The active configuration is identified by the label “*ACTIVE*” in the “STATUS” column.

Inactive configurations do not have anything displayed in the “STATUS” column.

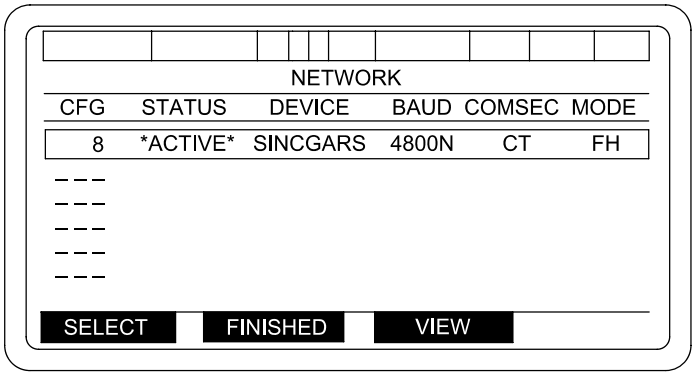


06pc321t

TACFIRE configurations will not display anything in the “COMSEC” and “MODE” columns of the NETWORK screen.

188-220 communications configurations identify the Device, Baud Rate, COMSEC and Mode. 188-220 configurations with any customized values identify the Device as “CUSTOM/R” for Radio and “CUSTOM/W” for Two-Wire.

The PDFCS will not reorder network configurations as a result of deletions.

The “FINISHED” and “VIEW” soft keys are not visible unless at lease one configuration is defined.

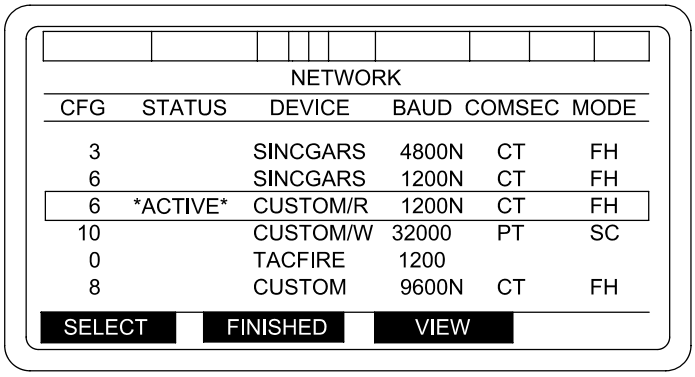


06pc322t

# M-6 PDFCS INITIALIZATION - CONTINUED

## M-6.2 Initializing - Continued

Soft key sequencing shall be as follows:

- SELECT – If the highlighted configuration was previously defined, control transitions to Network Settings–Select Configuration Option display. If the highlighted configuration has not been defined, control transitions to NETWORK SETTINGS–STANDARD COMMUNICATION CONFIGURATION display.
- FINISHED – When the operator presses the “FINISHED” soft key the PDFCS stores all defined network configurations and control transitions to Normal Operational Initialization Display.
- VIEW – When the “VIEW” soft key is pressed and the currently selected network configuration has been defined, control transitions to the NETWORK SETTINGS display. If the currently selected network configuration has not been defined, the “VIEW” soft key is inactive.
- CANCEL – When the “CANCEL” soft key is pressed any defined configuration values are discarded.

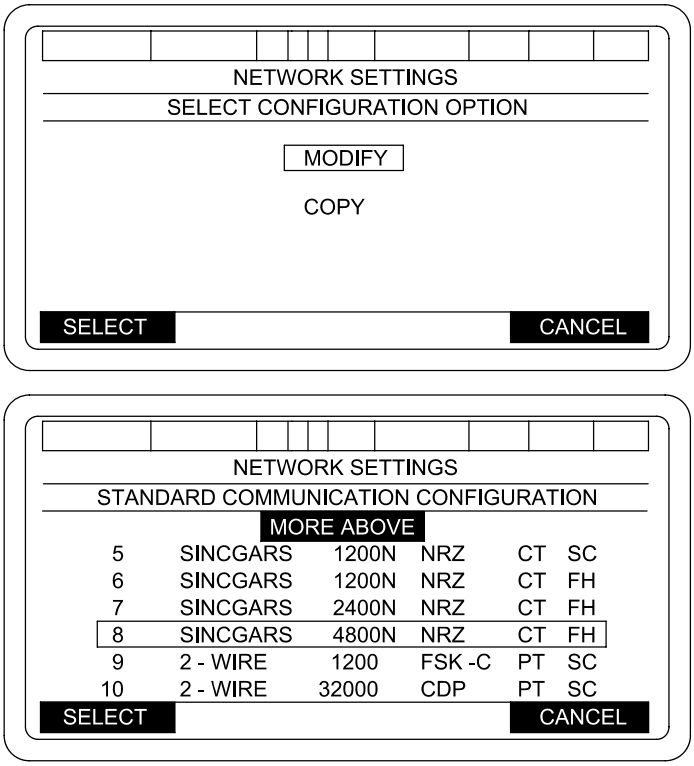


06pc320t

# M-6 PDFCS INITIALIZATION - CONTINUED

## M-6.2 Initializing - Continued

c. Standard Communications Configurations.

**NOTE**

- If the Communication Configuration is not defined in NETWORK display, then configuration #8 will be the default boxed selection.
- If the Communication Configuration is defined in NETWORK display, then that configuration number is the default boxed selection.

(1) PDFCS supports the following 11 predefined communications configurations:

**Table M-2 Network Configurations**

| CONFIGURATION MODE | DEVICE | BAUD RATE | COMSEC | MODE | MODULATION |
|---|---|---|---|---|---|
| 0 | TACFIRE | 4800 | ------ | ------ | NRZ |
| 1 | Sincgars | 4800 | PT | SC | NRZ |
| 2 | Sincgars | 4800 | CT | SC | NRZ |
| 3 | Sincgars | 4800 | CT | FH | NRZ |
| 4 | Sincgars | 1200N | PT | SC | NRZ |
| 5 | Sincgars | 1200N | CT | SC | NRZ |
| 6 | Sincgars | 1200N | CT | FH | NRZ |
| 7 | Sincgars | 2400N | CT | FH | NRZ |
| 8 | Sincgars | 4800N | CT | FH | NRZ |
| 9 | 2-Wire | 1200 | PT | SC | FSK-C |
| 10 | 2-Wire | 32000 | PT | SC | CDP |

(2) Soft key sequencing shall be as follows:

- SELECT - Selects the currently boxed selection. If the currently boxed selection is Communication Configuration 0, control transitions to TACFIRE NETWORK SETTINGS. If the currently boxed selection is Communication Configuration 1 to 10, control transitions to 188-220 NETWORK SETTINGS.
- CANCEL - If the operator presses CANCEL the current display transitions to the previous display.

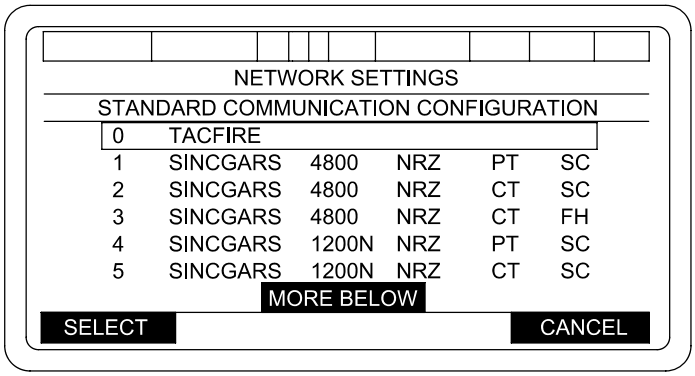


06pc319t

# M-6 PDFCS INITIALIZATION - CONTINUED

## M-6.2 Initializing - Continued

d. Network Settings-Select Configuration Option.

(1) Soft key sequencing shall be as follows:

- SELECT - Selects the currently boxed selection. Transition of control depends upon the selected menu.
- CANCEL - Allows the operator to discard any changes made. When pressed, any changes made to the current network configuration is discarded and control transitions to NETWORK display.

(2) MODIFY selection - Allows the operator to modify the current network configuration. If the current protocol is 188-220, then control transitions to 188-220 NETWORK SETTINGS. If the current protocol is TACFIRE, then control transitions to TACFIRE NETWORK SETTINGS.

(3) SET ACTIVE Selection

**NOTE**

SET ACTIVE selection will not be displayed if the current configuration is the active.

This selection allows the operator to set the current network configuration as the ACTIVE configuration. The following operator prompts are displayed: “SET ACTIVE?” “YES” “NO”
If NO is selected, no changes will be made.
If YES is selected, then the display will transition as follows:
If the current protocol is TACFIRE, then control shall transition to TACFIRE NETWORK SETTINGS.
If the current protocol is 188-220, then control shall transition to display 188-220 NETWORK SETTINGS CONFIGURATION.

(4) COPY selection

**NOTE**

COPY selection will not be displayed if all six network configurations have been defined.

Allows the operator to copy the current configuration into the first empty network configuration. The following operator prompt shall be displayed:
“USE ALL AND COPY?” “YES” “NO”
If NO is selected, no changes will be made.
If YES is selected, the current configuration copies into the first undefined network configuration. Control then transitions to the NETWORK display.

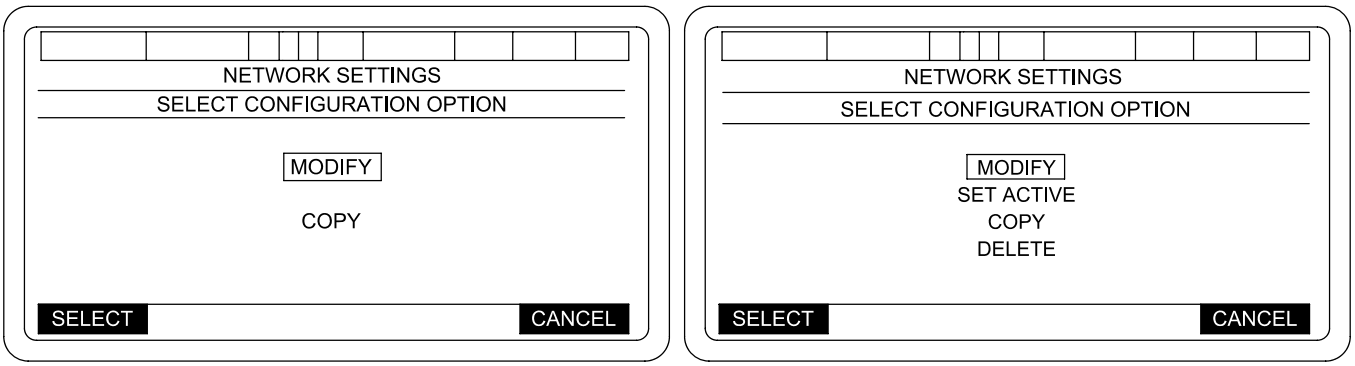


06pc318t

# M-6 PDFCS INITIALIZATION - CONTINUED

## M-6.2 Initializing - Continued

(5) DELETE selection

**NOTE**

DELETE selection will not be displayed if the current configuration is the active configuration.

Allows the operator to delete the current network configuration. The following message shall be displayed:
"DELETE NETWORK?" "YES" "NO"
If NO is selected, no changes will be made.
If YES is selected, the current configuration is deleted and control transitions to the NETWORK display.

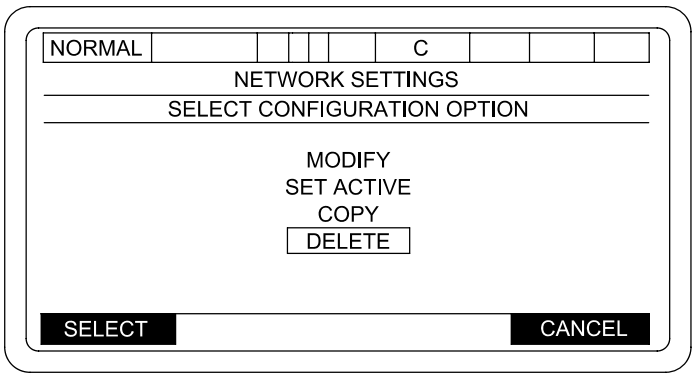


06pc317t

e. Network Settings-188-220C Protocol.

**NOTE**

- Each selection that requires configuration is marked with an asterisk. The default boxed shall be the first asterisked selection. If there are no asterisked selections, the default boxed selection is Net Type when the display is entered.

- The following values are required: "Net Type" and "Edit Addresses". If the "Net Type" is not defined, the "Edit Addresses" selection shall not be visible to the operator. The address definition depends on the "Net Type" value.

- If the "Configuration Mode" is set to "Basic", the "Advanced Settings" selection will not be visible. If the "Configuration Mode" is set to "Advanced" and any "Advanced Settings" have been customized, the "Communication Configuration" value will be displayed as "CUSTOM-XX" where "XX" is the original Communication Configuration number.

# M-6 PDFCS INITIALIZATION - CONTINUED

## M-6.2 Initializing - Continued

SELECT soft key when the following selection is boxed:

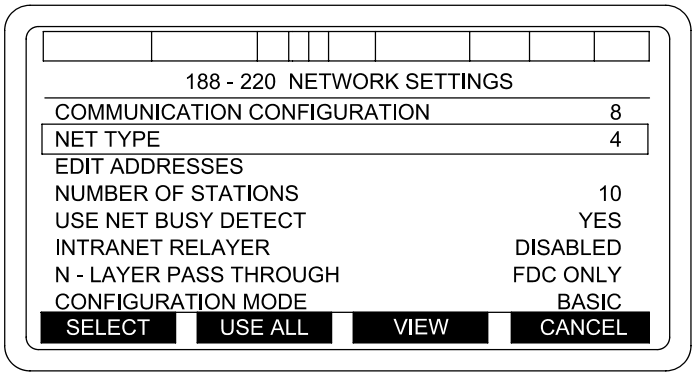


06pc316t

(1) Communication Configuration selection - Allows the operator to change the current Communication Configuration. The following message shall be displayed:
"CHANGE COMM CONFIG?" "YES" "NO".
If NO is selected, no changes will be made.
If YES is selected, the NETWORK SETTINGS-STANDARD COMMUNICATION CONFIGURATION screen will be displayed.

(2) Net Type Selection - Prompts the operator to enter a value for the "NET TYPE". The valid range is 0 to 255.
If the "Net Type" is modified and the "Configuration Mode" is set to "Advanced", then default subscriber addresses shall be updated.
If any address becomes a duplicate of another address as a result of changing the "Net Type", the following message will be displayed:
"DUPLICATE IP ADDRESS" "ACK"
If a duplicate address is detected, the "Edit Addresses" selection is marked with an asterisk.

(3) Edit Addresses selection - Allows the operator to modify the network addresses. If the "Configuration Mode" is set to "Basic", then control transitions to 188-220 Network Addresses (Basic). If the "Configuration Mode" is set to "Advanced", then control transitions to 188-220 Network Addresses (Advanced).

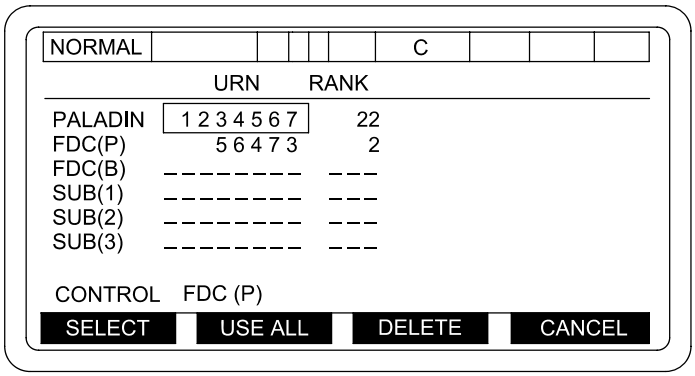


06pc315t

# M-6 PDFCS INITIALIZATION - CONTINUED

## M-6.2 Initializing - Continued

(4) Number of Stations selection – Prompts the operator to enter a value for “NUMBER OF STATIONS”. The valid range is 2 to 31 for previously undefined configurations. If the configuration has been previously defined, the valid range shall be XX to 31 where XX is equal to the highest current Rank that was selected.

(5) Use Net Busy Detect selection – If the installed TCIM is not capable of performing Net Busy Detection function, the following message shall be displayed:
“NOT SUPPORTED BY THIS TCIM”, “ACK”.
If the installed TCIM supports Net Busy Detect and allows the operator to select either “YES” or “NO” by pressing the SELECT soft key.
If Use Net Busy Detect is modified when the Configuration Mode is set to “Advanced”, then the value of Busy Detect Override will be set to default value for current settings of Device, COMSEC, Mode, Modulation, Baud Rate and EDC.

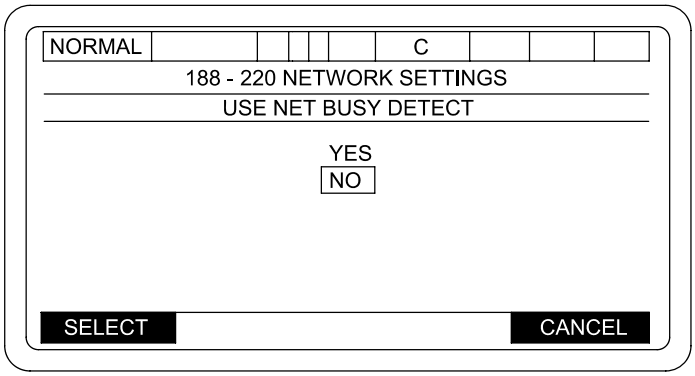


06pc314t

(6) Intranet Relayer selection – Control transitions to a screen titled “188–220 NETWORK SETTINGS – INTRANET RELAYER” and allows the operator to select either “Enabled” or “DIsabled” by pressing the SELECT soft key.

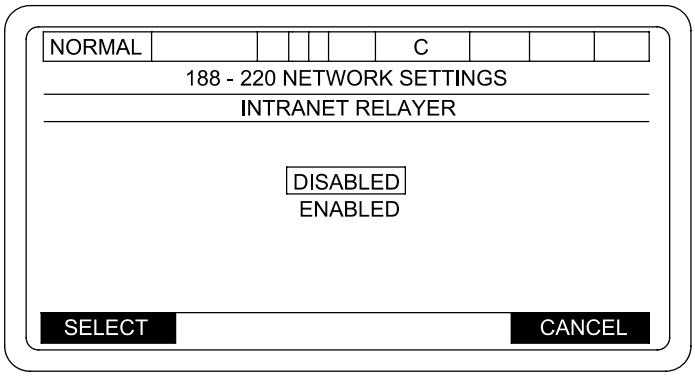


06pc313t

# M-6 PDFCS INITIALIZATION - CONTINUED

## M-6.2 Initializing - Continued

(7) N-Layer Pass Through selection - Control transitions to 188-220 NETWORK SETTINGS - N-LAYER PASS THROUGH and allows the operator to select "FDC Only" "Enabled" or "Disabled" by pressing the SELECT soft key.

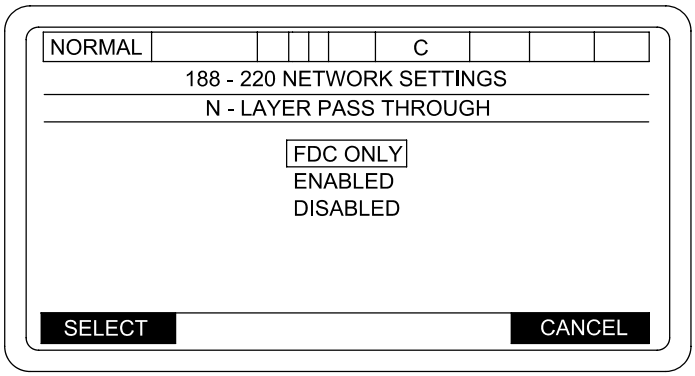


06pc312t

(8) Configuration Mode selection

If the current Configuration mode is set to "Basic", the following **WARNING** screen is displayed:

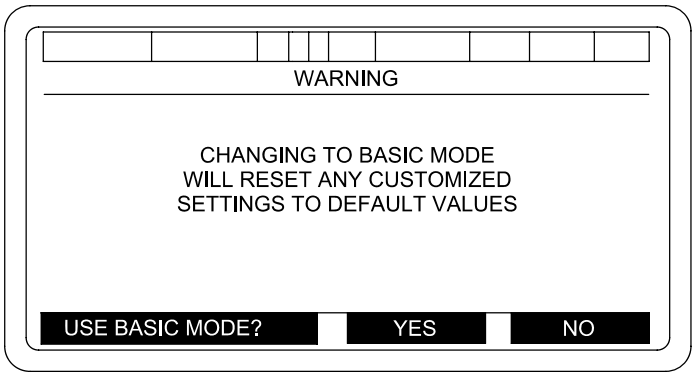


06pc310t

If the operator presses "YES", Configuration Mode changes to "Advanced".
If the operator presses "NO", Configuration Mode remains set to "Basic".

If the current Configuration Mode is set to "Advanced", the following **WARNING** screen is displayed:

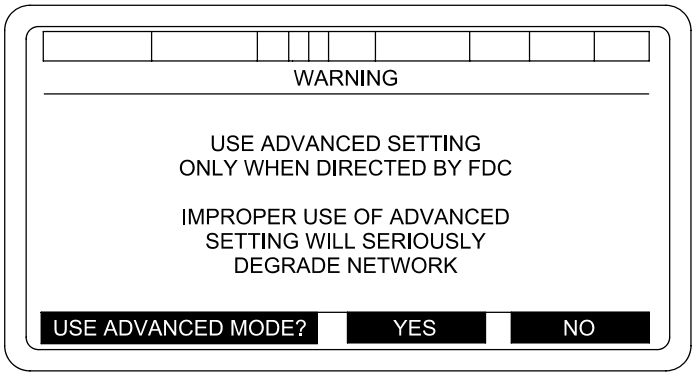


06pc311t

If the operator presses "YES", the "Configuration Mode" shall be changed to "Basic".
If the operator presses "NO", the "Configuration Mode" shall remain set to "Advanced".

# M-6 PDFCS INITIALIZATION - CONTINUED

## M-6.2 Initializing - Continued

(9) Advanced Settings selection

**WARNING**

- Modification and use of Advanced settings should only be performed at the direction of FDC. Improper use of Advanced settings will seriously degrade network.
- Advanced Setting changes are not authorized by the user unless directed by FDC. Failure to comply could result in system degradation.

When Advanced Setting is selected, control transitions to Advanced 188-220 Protocol Settings.

f. Network Settings-TACFIRE Protocol.

**NOTE**

- Each selection that requires configuration shall be marked with an asterisk. The default boxed will be the first asterisked selection. If there are no asterisked selections, the default boxed selection shall be Edit Addresses when the display is entered.
- The following values are required: "Edit Addresses", "Net Access Delay (Seconds)", and "Gun Key Time (Seconds)".
- If the "Device" value is modified and the current "Modulation" becomes invalid, the "Modulation" is set to a default value. If the "Modulation" value is modified or changed because "Device" was modified and the "Baud Rate" value becomes invalid, the "Baud Rate" is set to a default value based on "Device" and "Modulation" setting:

Pressing CANCEL soft key transitions to TACFIRE NETWORK SETTINGS display without changing the selection value. Invalid combinations will not be selectable.

SELECT soft key when the following selection is boxed:

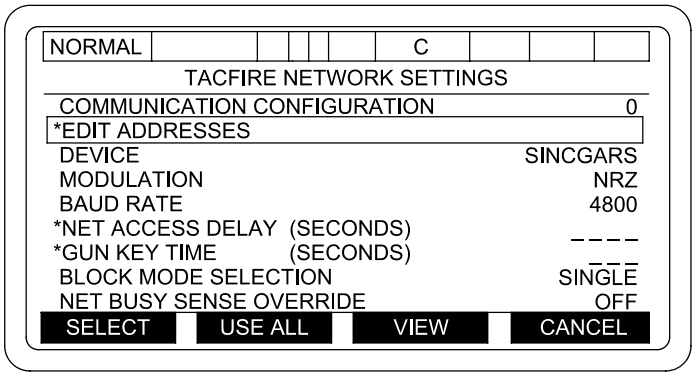


06pc307t

# M-6 PDFCS INITIALIZATION - CONTINUED

## M-6.2 Initializing - Continued

(1) Communication Configuration selection – Allows the operator to change the current Communications Configuration. The following message will be displayed:
"CHANGE COMM CONFIG?" "YES" "NO".
If NO is selected, no changes will be made.
If YES is selected, the NETWORK SETTINGS–STANDARD COMMUNICATION CONFIGURATION screen will be displayed.

(2) Edit Addresses selection – Transitions to display TACFIRE NETWORK ADDRESSES.

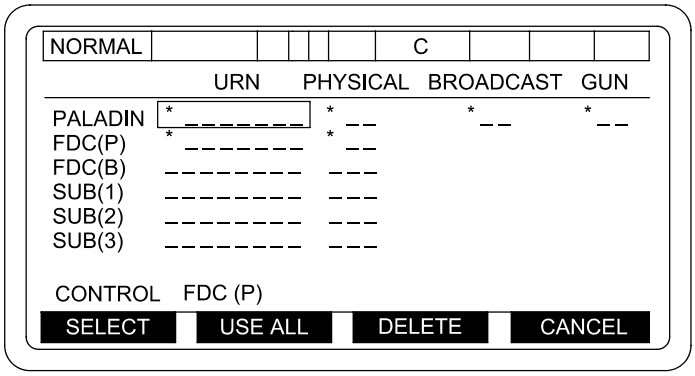


06pc308t

(3) DEVICE, MODULATION, and BAUD RATE selections – Transitions to NETWORK SETTINGS–TACFIRE PROTOCOL and subtitled with the selection values shown below:

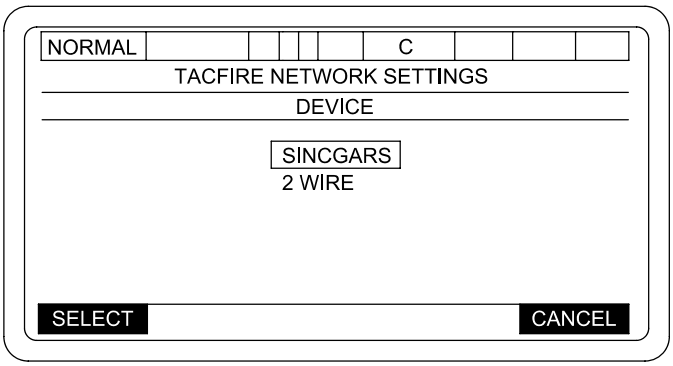


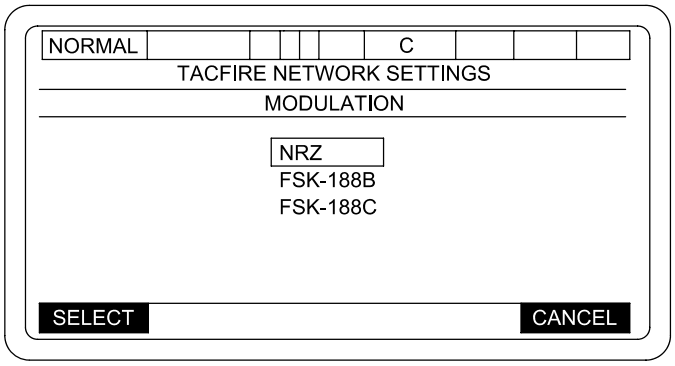


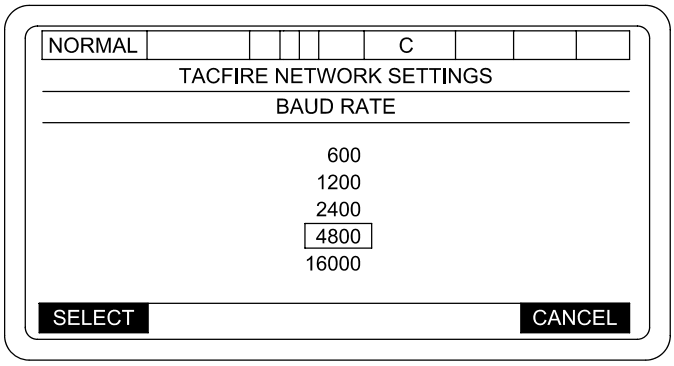


06pc309t

# M-6 PDFCS INITIALIZATION - CONTINUED

## M-6.2 Initializing - Continued

(4) NET ACCESS DELAY (SECONDS) selection – Selects proper transmission delay time to maintain network access order assigned to various subscribers. To enter a new NET ACCESS DELAY TIME box in new time. The operator is then prompted to enter a value for the "NET ACCESS DELAY" in seconds. The valid range is 0.5 seconds to 49.5 seconds in 0.5-second increments.

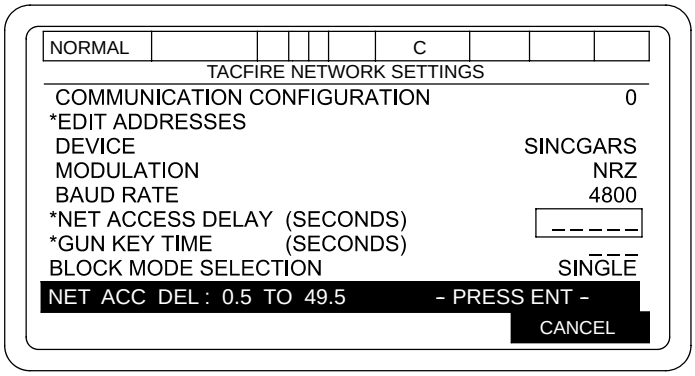


06pc305t

(5) GUN KEY TIME (SECONDS) selections – Selects assigned transmit delay time. This stabilizes the communications link and allows radio to reach full transmit power before digital data message is sent. When GUN KEY TIME is selected from NETWORK SETTINGS menu, a GUN KEY TIME menu is displayed. Box in proper time. Press SELECT soft key. This will enter data and return to TACFIRE NETWORK SETTINGS menu (new GUN KEY TIME will be shown).

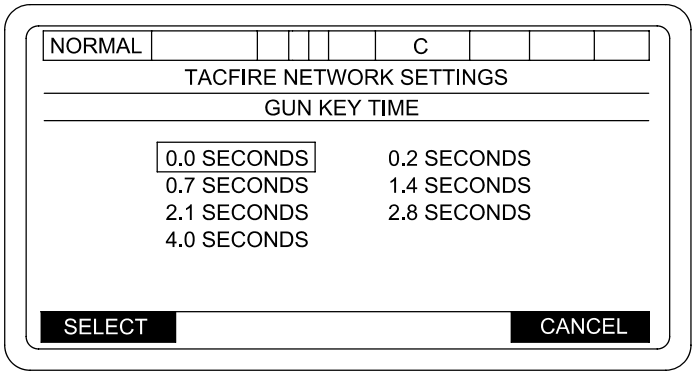


06pc306t

# M-6 PDFCS INITIALIZATION - CONTINUED

## M-6.2 Initializing - Continued

(6) BLOCK MODE selection – Selects single-block or double-block mode transmission of each data block. Double-block transmission provides for each block to be transmitted twice. When the BLOCK MODE SELECTION is selected, TACFIRE NETWORK SETTINGS – BLOCK MODE will appear with present block mode boxed in. After selection is made, TACFIRE NETWORK SETTINGS display will be shown with the new data in proper field. (Other data will remain unchanged). Double-block mode will be used when requested by Platoon Operations Center (POC).

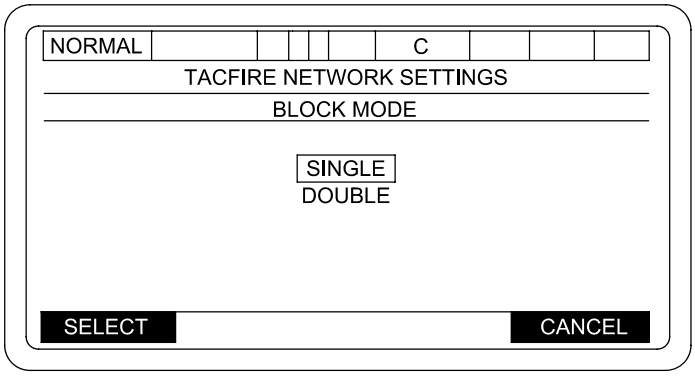


06pc303t

(7) NET BUSY SENSE OVERRIDE selection – Used to force a message through when communication net is degraded or jammed (message traffic or noise is sensed by communications processor). Selecting NET BUSY SENSE OVERRIDE (ON) when other subscribers are transmitting can cause message errors in radio traffic, and denies the other subscribers access. Consult unit SOP for proper use of NET BUSY SENSE OVERRIDE and press SELECT key. A TACFIRE NETWORK SETTINGS menu will be displayed showing present status boxed in. After proper selection, YES or NO is made, new data will be shown in the proper field. (Other data remains unchanged.)

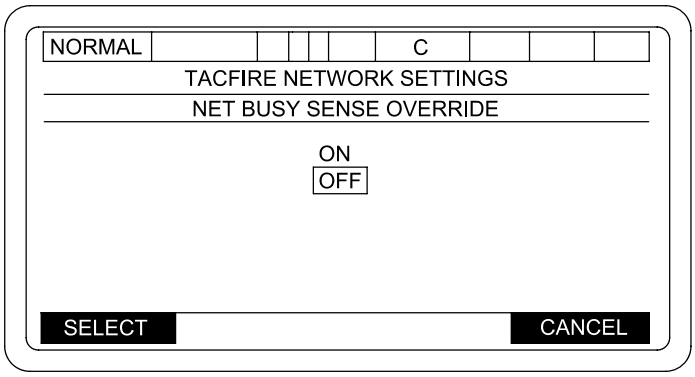


06pc304t

# M-6 PDFCS INITIALIZATION - CONTINUED

## M-6.2 Initializing - Continued

Soft key sequencing shall be as follows:

- USE ALL – If any selection is marked with an asterisk "*", the following message is displayed:
  "CLEAR *ASTERISKS* TO CONTINUE" "ACK"
  If all asterisks have been cleared, control transitions to NETWORK display.
- VIEW – Control transitions to display all protocol and address information for review using the same format as actual selection displays except fields cannot be selected.
- CANCEL – Discards any changes and control transitions to NETWORK display.

g. 188-220 Network Addresses (Basic).

**NOTE**

Each selection that requires configuration will be marked with an asterisk. The following values are required: PALADIN URN, PALADIN RANK, Controlling FDC URN, Controlling FDC RANK. Once the selection has been configured, the asterisk will be cleared.

SELECT soft key – Selects currently boxed selection. Transition of control depends on currently selected menu item as described below:

(1) CONTROL Row selection – If current controlling FDC is the primary FDC, the following message is displayed:
"CHANGE TO BACKUP?" "YES" "NO"
If the current control FDC is the backup FDC, the following message is displayed:
"CHANGE TO PRIMARY?" "YES" "NO"
If NO is selected, no changes will be made.
If YES is selected, the controlling FDC value shall be toggled with its current state.

(2) URN Column selection – Prompts the operator to enter a URN value ranging from 0 to 16,777,214. When the ENT key is pressed, the values shall be checked for duplicate URN values.
If a duplicate value is found, the following message will be displayed:
"DUPLICATE VALUE-REENTER" "ACK"
Once the message is acknowledged, the operator is required to enter a new URN or press CANCEL soft key.

# M-6 PDFCS INITIALIZATION - CONTINUED

## M-6.2 Initializing - Continued

(3) RANK Column selection – Prompts the operator to enter PDFCS station rank range 1 to 31. When the ENT key is pressed, values will be checked for duplicate Station Rank values. If a duplicate value is found within the current configuration, the following message will be displayed: "DUPLICATE VALUE–REENTER" "ACK"

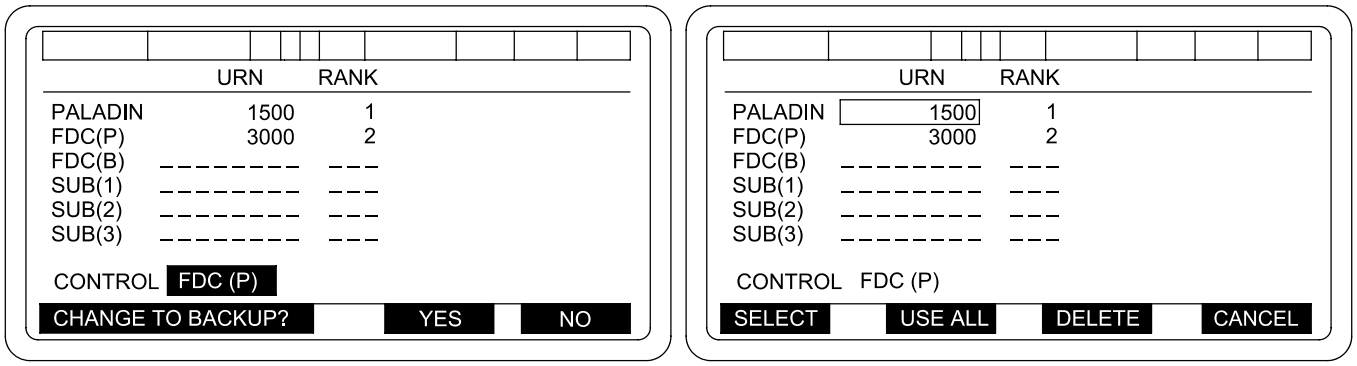


06pc302t

**NOTE**

Once the message is acknowledged, the operator is required to enter a new Station Rank value or press CANCEL.

If the Rank entered exceeds the Number of Stations value, the Number of Stations shall be set to the Rank value entered and the following message shall be displayed: "NUMBER OF STATIONS SET TO XX" "ACK" where XX is the Rank value entered.

Soft key sequencing shall be as follows:

- USE ALL soft key – The following validity checks will be performed. If all are valid, control shall transition to 188–220 NETWORK SETTINGS. If any menu selections are marked with an asterisk "*", the following message will be displayed:
  "CLEAR *ASTERISKS* TO CONTINUE" "ACK"
  Address Completion Check – If a subscriber entry line has been incompletely defined (URN defined and Rank not defined, or Rank defined and URN not defined) then the following message will be displayed:
  "INCOMPLETE ADDRESS XXXXXX", "ACK"
  Where "XXXXXX" identifies the incomplete subscriber: "FDC(P)", "FDC(B)", "SUB(1)", "SUB(2)" or "SUB(3)".

- DELETE soft key – Allows the operator to delete the currently boxed URN or Rank. The following message will be displayed:
  "DELETE ADDRESS", "YES" "NO"
  If NO is selected, no changes will be made.
  If YES is selected, the current selection is deleted and its value displayed as a dashed value.
  Pressing the DELETE soft key when Control FDc selection is boxed will have no effect.

- CANCEL soft key – Discards any changes made to the addresses, control transitions to 188–220 – NETWORK SETTINGS.

# M-6 PDFCS INITIALIZATION - CONTINUED

## M-6.2 Initializing - Continued

h. TACFIRE Network Addresses.

Each selection that requires configuration is marked with an asterisk. The following values are required:

PALADIN URN
PALADIN Physical Address
PALADIN Broadcast Address
GUN
Controlling FDC URN
Controlling FDC Physical Address

SELECT soft key - Selects the currently boxed selection. Transition of control depends on currently selected menu item as described below:

(1) CONTROL Row selection - If current controlling FDC is the primary FDC, the following message is displayed:
"CHANGE TO BACKUP?" "YES" "NO"
If the current controlling FDC is the backup FDC, the following message is displayed:
"CHANGE TO PRIMARY?" "YES" "NO"
If NO is selected, no changes are made.
If YES is selected, the controlling FDC value will be toggled from its current state.

(2) URN Column selection - Prompts the operator to enter a URN value. The valid range is 0 to 16,777,214. When the "ENT" key is pressed, the values are checked for duplicate URN values. If a duplicate value is found within the current configuration, the following message is displayed:
"DUPLICATE VALUE-REENTER" "ACK"
Once the message is acknowledged, the operator is required to enter a new URN value or press CANCEL soft key.

(3) PHYSICAL Column Selection - Control transitions to NETWORK SETTINGS - TACFIRE ADDRESSES with currently selected subscriber identified in the subtitle.

(4) BROADCAST Column Selection - Control transitions to NETWORK SETTINGS - TACFIRE ADDRESSES with PALADIN Broadcast Address identified in the subtitle.

(5) GUN NUMBER Column Selection - Control transitions to NETWORK SETTINGS - GUN NUMBER.

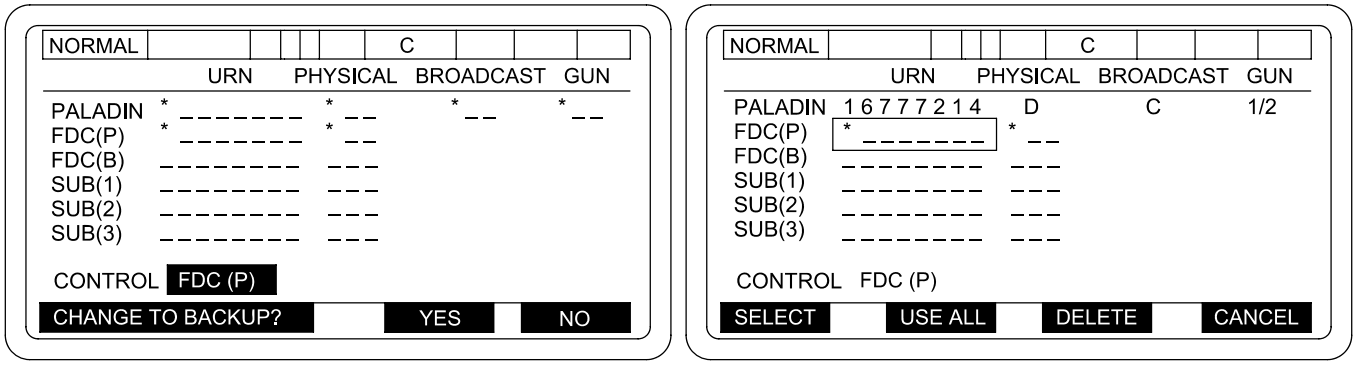


06pc301t

# M-6 PDFCS INITIALIZATION - CONTINUED

## M-6.2 Initializing - Continued

Soft key sequencing shall be as follows:

- USE ALL – If any selection is marked with an asterisk “*”, the following message is displayed:
  “CLEAR *ASTERISKS* TO CONTINUE”, “ACK”
  If a subscriber entry line is incompletely defined (URN defined and Address not defined, or Address defined and URN not defined) then the following message is displayed:
  “INCOMPLETE ADDRESS XXXXXX”, “ACK”
  Where “XXXXXX” identifies the incomplete subscriber: “FDC(P)”, “FDC(B)”, “SUB(1)”, “SUB(2)” or “SUB(3)”.
  If all asterisks are cleared, the address information shall be saved and control transitions to TACFIRE NETWORK SETTINGS.

- DELETE – Allows the operator to delete the currently boxed URN or address value. The following message will be displayed:
  “DELETE ADDRESS”, “YES”, “NO”
  If NO is selected, no changes are made.
  If YES is selected, current selection is deleted and its value displayed as a dashed value.
  Pressing the DELETE soft key when Control FDC selection is boxed will have no effect.

- CANCEL – Disregards any changes made to the addresses and control transitions to TACFIRE NETWORK SETTINGS.

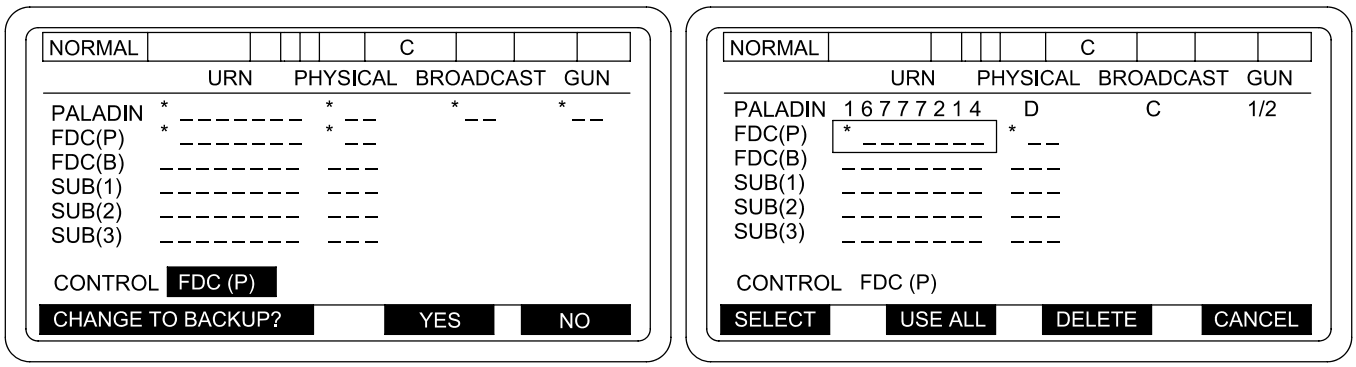


06pc301t

# M-6 PDFCS INITIALIZATION - CONTINUED

## M-6.2 Initializing - Continued

i. Network Settings – Tacfire Addresses Display.

**NOTE**

The screen subtitle will display which value is being entered as follows:

"PALADIN PHYSICAL ADDRESS"
"PALADIN BROADCAST ADDRESS"
"PRIMARY FDC ADDRESS"
"BACKUP FDC ADDRESS"
"OTHER SUBSCRIBER (1) ADDRESS"
"OTHER SUBSCRIBER (2) ADDRESS"
"OTHER SUBSCRIBER (3) ADDRESS"

Addresses currently assigned, with the exception of the address for the value displayed in the subtitle, is not selectable.

Soft key sequencing shall be as follows:

- SELECT – Selects the value currently boxed, and assigns it as the address for the device displayed in the subtitle. Control then transitions to TACFIRE NETWORK ADDRESS.
- CANCEL – Control transitions to TACFIRE NETWORK ADDRESSES without making any changes.

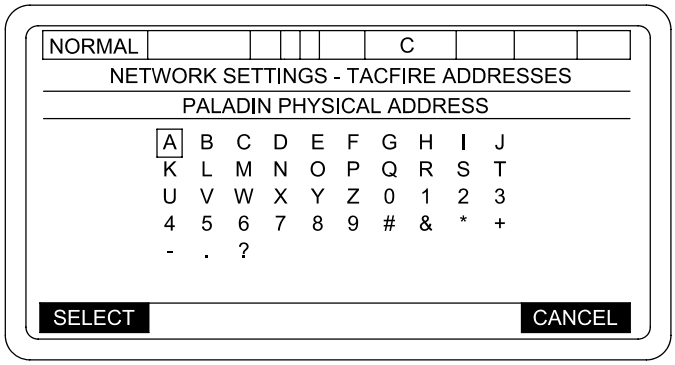


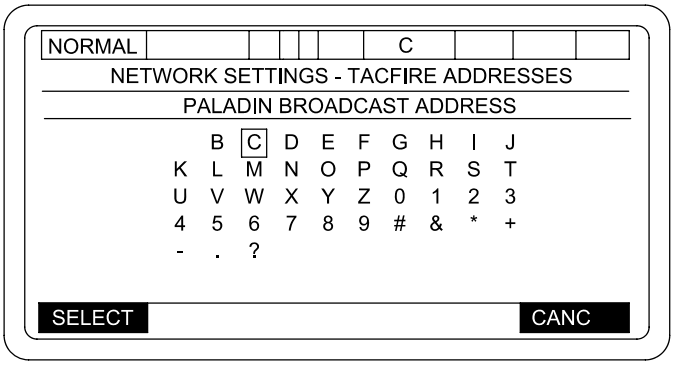


06pc299t

# M-6 PDFCS INITIALIZATION - CONTINUED

## M-6.2 Initializing - Continued

j. TACFIRE Network Settings – Gun Number Display.

Soft key sequencing shall be as follows:

- SELECT – Selects the gun number currently boxed, and assigns it as the gun number for the PALADIN address. Control then transitions to TACFIRE NETWORK ADDRESSES.
- CANCEL – Allows the operator to exit the screen without making any changes. Control then transitions to TACFIRE NETWORK ADDRESSES.

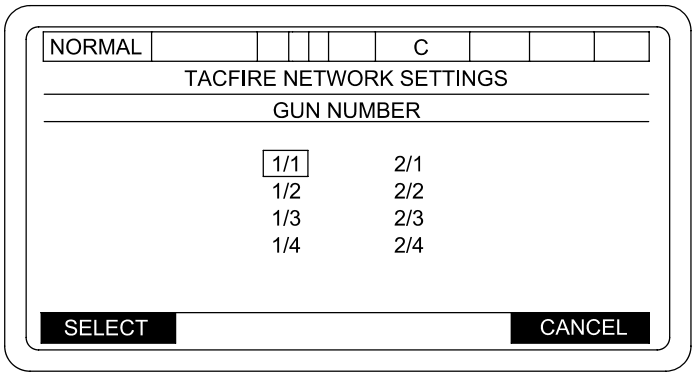


06pc300t

# M-6 PDFCS INITIALIZATION - CONTINUED

## M-6.2 Initializing - Continued

k. Other Initialization Steps. When NETWORK has been initialized, a SETUP AND INFORMATION menu will be displayed. There are two pages to this menu. By pressing NEXT PAGE key, second page will be displayed.

### NOTE

- Items marked with an * must be entered to complete initialization process. Without these data entries, the system will not be completely initialized and the PDFCS will not be able to receive a mission.
- The NAV UPDATE selection will be blank when a command has been sent to the navigation subsystem and has not yet been completed.
- When in a degraded mode, some items may not appear.
- If the PDFCS has a valid NVM the “FAST INIT” softy key shall be available during initialization. Pressing the “FAST INIT” soft key shall clear the * from the “FDC DATA XFER”, “AMMO INVENTORY”, “PROP TEMP”, and “TOTAL RESPONSE” fields.

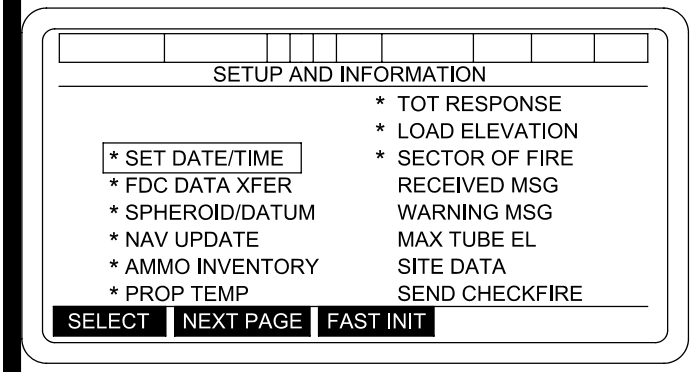


06pc327ta

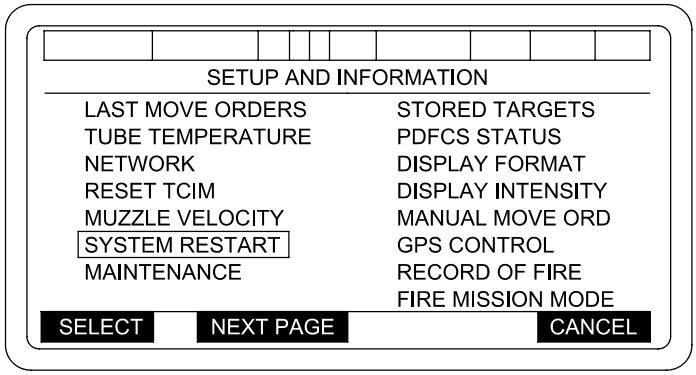


06pc261ta

# M-6 PDFCS INITIALIZATION - CONTINUED

## M-6.2 Initializing - Continued

Steps of other initialization data entry are done as follows:

(1) SET DATE/TIME Group - This data is required for proper communications and is used for TOT data and other time related tasks and missions. From SETUP AND INFORMATION menu, box in SET DATE/TIME. Press SELECT key. This will cause a SET DATE/TIME Group menu to be displayed. If GPS data is available select “USE GPS”. Note, GPS Time is ZULU (Greenwich Mean Time) when “USE GPS” selected, all times will be aligned to ZULU (Local ZULU and GPS). If GPS data is not available or if POC has instructed you not to use GPS proceed as follows:

(a) Enter two digits each for Year, Month, Date, Hour and Minute into boxed-in area.

(b) If a mistake is made prior to typing in all 10 digits, press CLR key and try again. If all 10 digits have been typed in, then menu will automatically show a SET DATE/TIME GROUP display with prompt.

(c) If incorrect data has been typed in after all 10 digits have been entered, press CANCEL key. This will return display to SET DATE/TIME menu. Then proceed with reentering correct data for Date/Time Group.

(d) To ensure proper time synchronization between the PDFCS and POC/FDC, a countdown to MARK should be controlled by the POC. If data is correct when MARK is announced by POC, press MARK key to start the clock. This will return the display to the SETUP AND INFORMATION menu.

(e) Date/Time setting on system - Defaults to system clock if no other input is entered in. FDC and the PDFCS messages will be rejected if more than 60 minutes difference between FDC time and PDFCS time has elapsed. Unit SOP needs to be in real Date/Time.

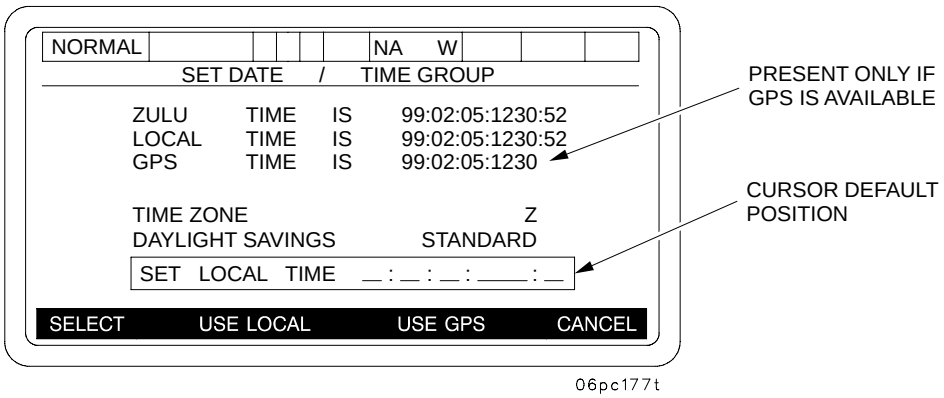


**NOTE**

Upon entering the Current DTG, Current Zulu, and Current GPS time, if available, shall be displayed to the operator. Operator must enter Time Zone, Daylight Savings and NEW DTG. The first time the PDFCS-XXI program is executed the Zulu and Local time will be calculated from the hardware clock.

# M-6 PDFCS INITIALIZATION - CONTINUED

## M-6.2 Initializing - Continued

SELECT TIME ZONE - ENTER SELECT TIME ZONE IN ACCORDANCE WITH UNIT SOP.

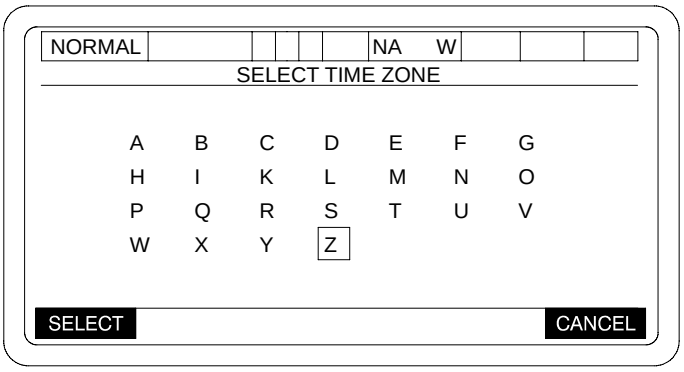


06pc178t

SELECT DAYLIGHT SAVINGS - ENTER SELECT DAYLIGHT SAVINGS TIME IN ACCORDANCE WITH UNIT SOP.

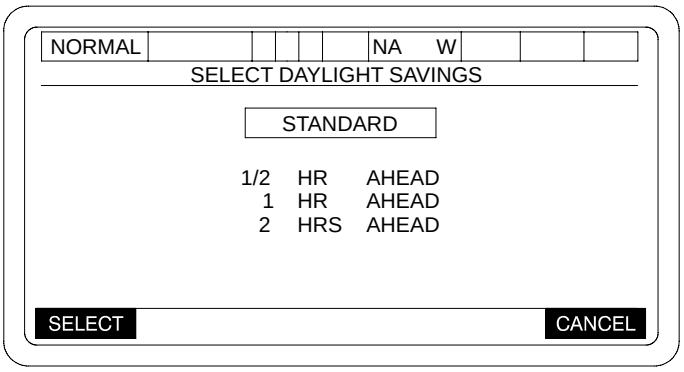


06pc179t

# M-6 PDFCS INITIALIZATION - CONTINUED

## M-6.2 Initializing - Continued

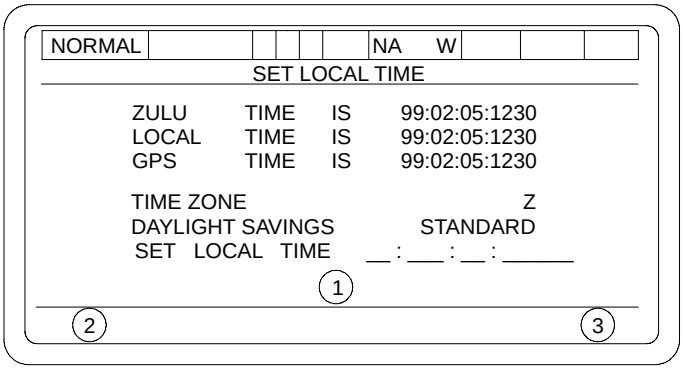


06pc180t

1

TYPE IN NEW DTG - YY:MM:HHMM = Shall appear below the SET LOCAL TIME row upon entry to display above menu. Operator must enter date in format displayed (YY:MM:DD:HHMM). Operator may press CLEAR any time to reset entry.

PRESS MARK TO SET LOCAL TIME = Shall appear below the SET LOCAL TIME row upon entry of the last digit of the minute.

2

MARK = The MARK key shall be displayed upon entry of the last digit of the minute. When the MARK key is pressed the Local Time shall be processed and returned to the SETUP AND INFORMATION menu.

INVALID DTG VALUE ACK = If an invalid DGT is entered, this error shall be displayed to the operator. Press “ACK” and re-enter the date and time.

3

CANCEL = When PRESS MARK TO SET LOCAL TIME is displayed and the CANCEL key is pressed the SET LOCAL TIME entries shall be cleared and the operator shall be able to enter a new LOCAL TIME.

= When the CANCEL key is pressed under all other conditions to display the SETUP AND INFORMATION menu will be displayed.

Date/Time setting on System - Defaults to system clock if no other Input is recorded in FDC and PDFCS. Messages will reject if more than 60 minutes has elapsed. Unit SOP needs to be in real Date/Time.

# M-6 PDFCS INITIALIZATION - CONTINUED

## M-6.2 Initializing - Continued

**NOTE**

The FDC data transfer must be done each time you initialize the PDFCS, if the FDC/FDC is operational.

(2) FDC DATA XFER – To get initialization data from the POC/FDC, box in FDC DATA XFER and then press SELECT key. This will cause a FDC DATA XFER menu to be displayed with INITIALIZATION already boxed and Operator Alert. Pressing YES key will send a request to POC/FDC for needed data. Data includes: Subscriber File Message, Map Modification Input Message, Computer Meteorological Message, and Registration Data Input Message. This ensures that operator can properly communicate with other subscribers and can compute fire mission accurately. If NO ACK REQ INIT is displayed, contact POC to ensure that proper initialization has taken place. Repeat procedure if required. When initialization is complete, press CANCEL key.

If FDC DATA XFER does not have an *, then pressing the SELECT key will cause a FDC DATA XFER menu to be displayed without INITIALIZATION boxed. Box in INITIALIZATION and press SELECT key to provide the Operator Alert. Pressing YES sends the request to POC/FDC as described above.

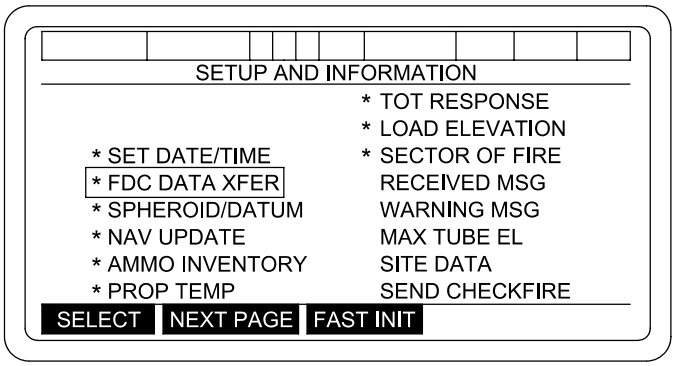


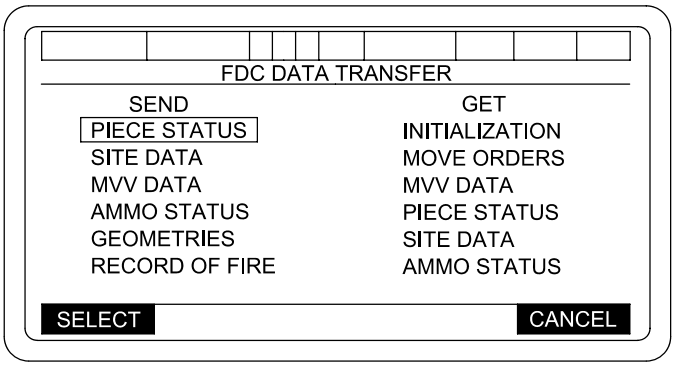


06pc323t

# M-6 PDFCS INITIALIZATION - CONTINUED

## M-6.2 Initializing - Continued

(3) SELECT SPHEROID/DATUM - The FDC DATA XFER, INITIALIZATION data includes a SPHEROID/DATUM.

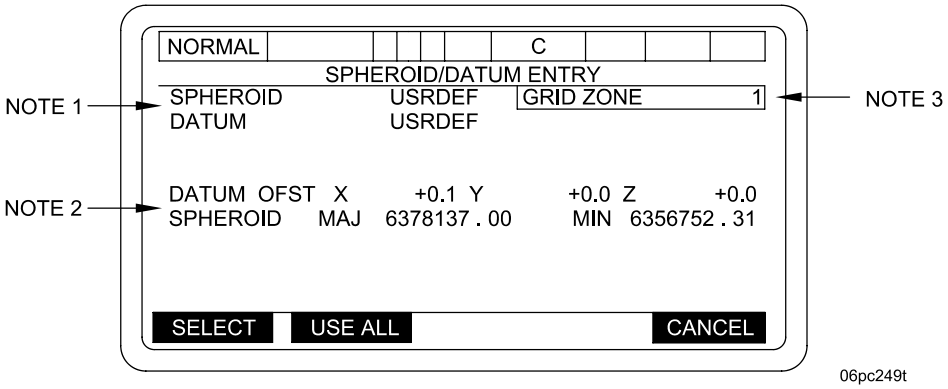


06pc249t

Check to see if all the data is correct. If it is correct, press the USE ALL key, and proceed with the initialization. If an entry is not correct, select that field and make corrections.

NOTE 1 SELECTION OF THIS FIELD WILL DISPLAY SELECT SPHEROID MENU.

NOTE 2 FIELD IS ONLY PRESENT IF USER DEFINED (USRDEF) DATUM IS USED.

NOTE 3 WHEN GRID ZONE IS SELECTED THE FOLLOWING WILL BE DISPLAYED.

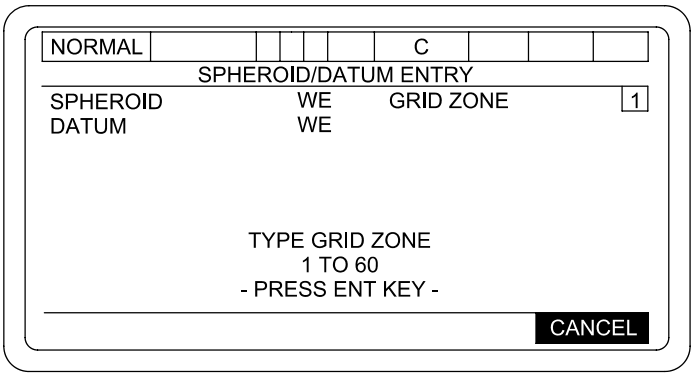


06pc250t

# M-6 PDFCS INITIALIZATION - CONTINUED

## M-6.2 Initializing - Continued

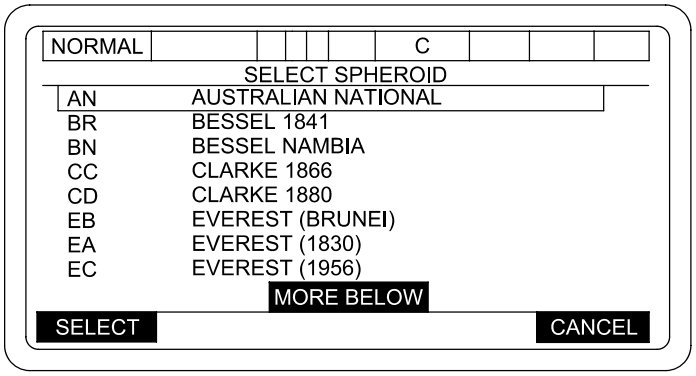


06pc251t

When more than one page is required to display choices, scrolling shall be enabled and “MORE BELOW” or “MORE ABOVE” will be displayed.

Enter the defined SPHEROID, PRESS the SELECT SOFT KEY and the SELECT DATUM menu will be displayed. Refer to Tables in Appendix J.1 for SPHEROID listings.

SOFT KEY SEQUENCING SHALL BE AS FOLLOWS:

1. If USRDEF is boxed in and SELECTED then the ENTER USER DEFINED SPHEROID MAJOR AXIS menu will be displayed.

2. If any other SPHEROID is SELECTED then the SELECT DATUM menu will be displayed to force SELECTION of the DATUM.

3. If CANCEL, then the SPHEROID/DATUM ENTRY menu will be displayed.

Maps are based upon a “reference datum.” This is really the model of the Earth that the cartographer uses when making a map. The reference datum consists of two parts, the spheroids and the datum offsets.

The Earth is really not a perfectly round globe but is a little “fatter” at the equator. Therefore, the mapmaker uses a spheroid rather than a globe to describe the Earth’s shape. Instead of just using one radius as one would do to describe a globe, two values are used. The first is the semi-major axis. It is the radius of the Earth at the equator. The second number is the semi-minor axis. It is the distance from the center of the Earth to the poles. It is slightly smaller than the semi-major axis. (The WGS 84 model of the Earth uses a semi-major axis of 6,378,137 meters and 6,356,752 meters for the semi-minor axis).

The cartographer may choose to base his model of the Earth’s surface using a center point that is different from the true center of the Earth. This offset of the center point is described by three “datum offset” values: delta X, delta Y, and delta Z. These values are typically a few hundred meters.

There are many standard spheroid and datums commonly used for maps. If the spheroid/datum is not supplied by a message from FDC, the PDFCS operator will be told to select a certain spheroid and datum at the display unit. The starting point for entering this data is the SPHEROID/DATUM ENTRY display.

The spheroid is selected using the SELECT SPHEROID sub-display. This display lists choices. It is possible to use spheroid values different from the ones in the display lists. The different values are entered as “user defined.” This is selected by the USRDEF option listed as a choice for a spheroid. If the operator selects USRDEF, other sub-displays prompt him to enter the semi-major and semi-minor axis. These values must be obtained from the POC and should only be used with guidance from Battery Commander.

# M-6 PDFCS INITIALIZATION - CONTINUED

## M-6.2 Initializing - Continued

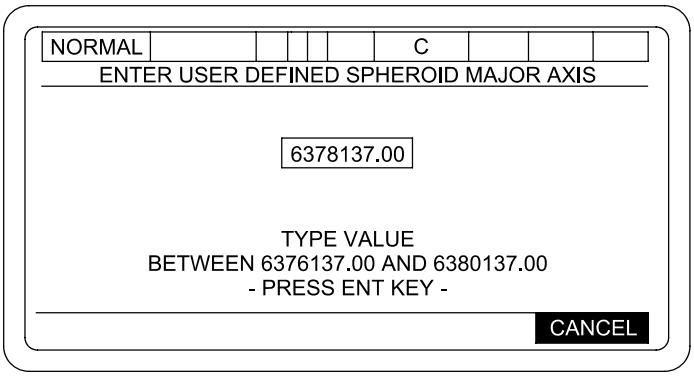


06pc252t

1. An unedited DATA fields remain at their current values when ENT is pressed.

2. Enter the appropriate value and press ENT key. The USER DEFINED SPHERIOD MINOR AXIS menu will be displayed.

3. If the CANCEL key is selected the SELECT SPHERIOD menu will be displayed.

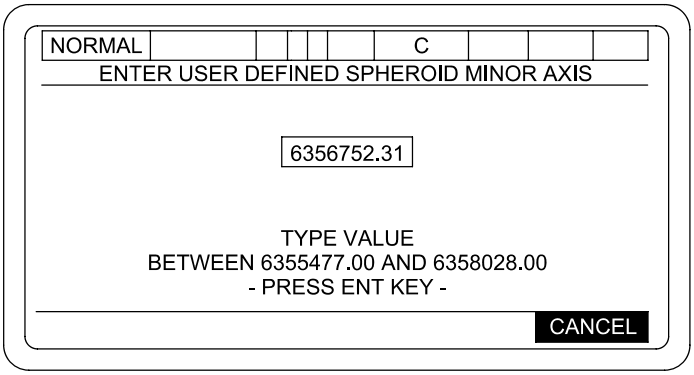


06pc252ta

# M-6 PDFCS INITIALIZATION - CONTINUED

## M-6.2 Initializing - Continued

1. An unedited DATA fields remain at their current values when ENT is pressed.

2. Enter the appropriate value and press ENT key. The CONFIRM USER DEFINED SPHERIOD AXIS menu will be displayed.

3. If the CANCEL key is selected the ENTER USER DEFINED SPHEROID MAJOR AXIS menu will be displayed.

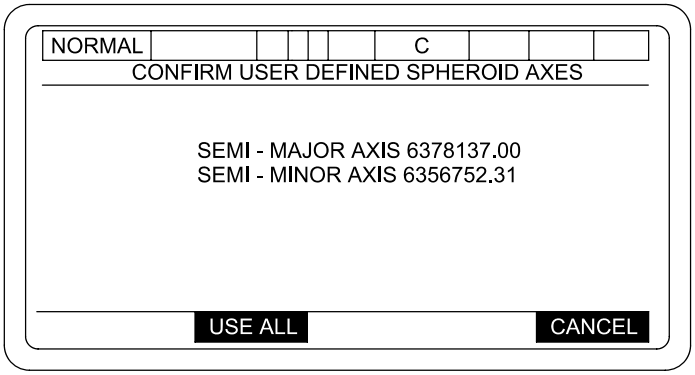


06pc252tb

SOFT KEY sequencing shall be as follows:

If **CANCEL**, then ENTER USER DEFINED SPHERIOD MINOR AXIS menu will be displayed.

If **USE ALL**, then the SELECT DATUM menu will be displayed.

The datum offset is selected using the SELECT DATUM sub-display. This display lists valid choices listed by an alphabetical code. It is possible to use datum offset values different from the ones in the display lists. The different values are entered as “user defined”. This is selected by the USRDEF option listed as a choice for datum offset. The datum offset values are entered using the ENTER USER DATUM PARAMETERS sub-display. The offset values are listed as DATUM OFFSET X, Y, and Z.

# M-6 PDFCS INITIALIZATION - CONTINUED

## M-6.2 Initializing - Continued

There is a restriction on the use of user defined spheroid and datum. The operator cannot use a new user defined spheroid if current spheroid selection is user defined. Likewise, the operator cannot select a new user defined datum selection if the current datum selection is user defined. If the operator wants to go from a user defined datum to a new user defined datum, the operator should simply select any standard datum and then enter the new user defined. Likewise, if the operator wants to go from a user defined spheroid to a new user defined spheroid, the operator should simply select any standard spheroid and then enter the new user defined.

When DATUM is selected, SELECT DATUM menu is displayed:

**NOTE**

The DATUMS available are dependant on the SPHEROID selected.

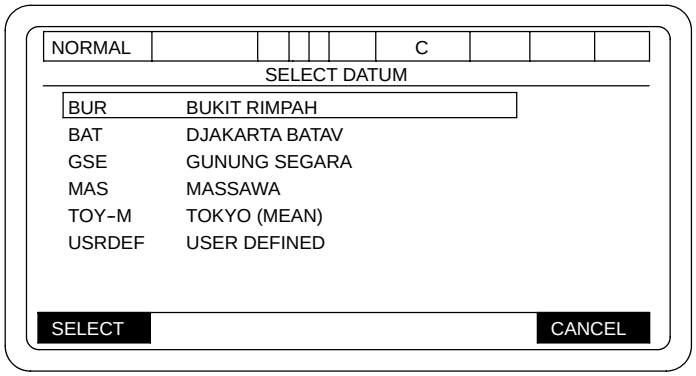


06pc253t

If CANCEL then the ENTER SPHEROID/DATUM ENTRY will be displayed.

When more than one page is required to display choices, scrolling shall be enabled and “MORE BELOW” or “MORE ABOVE” will be displayed.

Box in the correct DATUM and press the SELECT key. The DATUMs available are dependent on the SPHEROID selected. See Appendix J.1.

**NOTE**

The reference frame for UTM position coordinates is a DATUM. Typically, a local DATUM is defined by an ellipsoidal Earth model (SPHEROID) and a starting point (origin) for the coordinate system. Coordinates on a map or in a Trig list (SCPs) often are on a Local DATUM. An example of a Local DATUM is the North American 1927 (NAD 27) DATUM used in the United States.

# M-6 PDFCS INITIALIZATION - CONTINUED

## M-6.2 Initializing - Continued

There have been many different Local DATUMs developed. GPS computes position on the World Geodetic System 1984 (WGS 84), a worldwide coordinate system. To use GPS with coordinates on a Local DATUM, the coordinates must be mathematically shifted. The PDFCS (DRUH and PLGR) can automatically perform DATUM shifting, but first the operator must select the Local DATUM to be used, or provide the appropriate shift parameters. For PDFCS operation, Local DATUMs are represented by two sets of parameters: the Local Ellipsoid (SPHEROID) and shift parameters as defined for each Local DATUM (DATUM IDs).

The FDC can provide the SPHEROID. The SPHEROID selected will determine which DATUM IDs will be available for selection. The PDFCS/FDC SPHEROID and DATUM TABLE provides the SPHEROID number for the PDFCS and FDC, which DATUM IDs are available for that SPHEROID number and the normal coverage area. Note that there may be more than one DATUM ID associated with a Local DATUM because the shifts vary by locality. For other DATUMs or areas outside the indicated coverage area, User Defined (USRDEF) Datum shifts may be entered manually. The table is not intended as an absolute. A map sheet will identify the DATUM name, Ellipsoid (SPHEROID) name and the coordinate type, or the map sheet will identify the area. The data from a Trig list should identify the same information. These parameters must be correlated to the DATUM ID. If the applicable DATUM hasn't been programmed in the PDFCS, shift parameters for many other DATUMs and regions have been published in DMA TR 8350.2 and may be entered thru the DATUM X, Y, and Z OFFSETs. Note that the PDFCS can not accept shift parameters for all DATUMs because its SPHEROID capability is limited to those listed in the PDFCS/FDC Table (Appendix J.1).

If the DATUM USRDEF is selected, then the DATUM X, Y, and Z offsets must be entered. These values must be obtained from the POC and should only be used with guidance from Battery Commander.

The ENTER USER DATUM PARAMETERS page should look like:

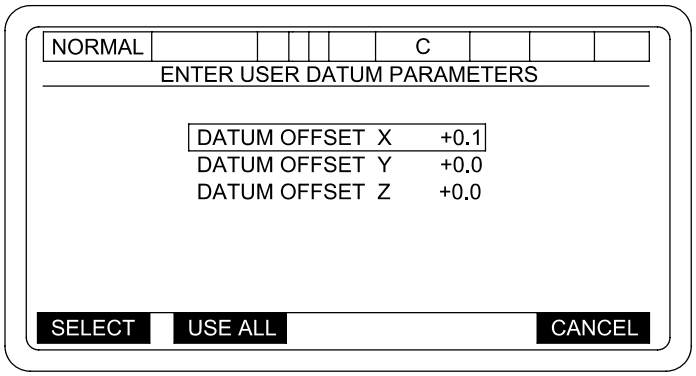


06pc254t

- When field selected:
  TYPE OFFSET
  BETWEEN -2000.0 AND +2000.0
  -PRESS ENT KEY-
- When field selected: + / -
  Otherwise: USE ALL
- When no fields are selected: SELECT
  Otheriwse: BLANK

# M-6 PDFCS INITIALIZATION - CONTINUED

## M-6.2 Initializing - Continued

**NOTE**

- Any un-edited DATA fields remain at their current values when USE ALL KEY is pressed.
- SOFT KEY sequencing shall be as follows:

If CANCEL , then the SELECT DATUM menu will be displayed.

If USE ALL , then the SPHEROID/DATUM ENTRY menu will be displayed.

**NOTE**

If **CANCEL** is selected, all information up to this point will be deleted.

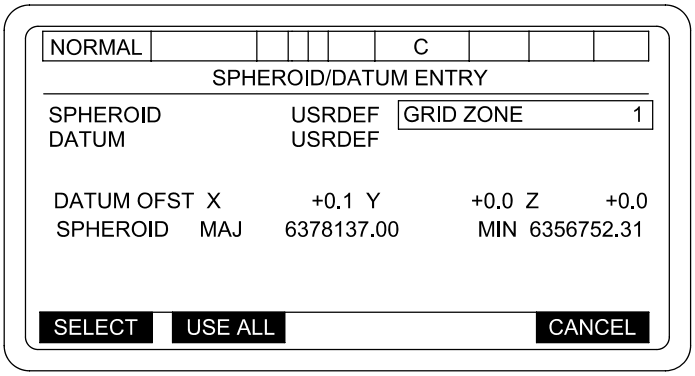


06pc270t

If **USE ALL** , all information will be locked in and the SETUP AND INFORMATION MENU will be displayed.

# M-6 PDFCS INITIALIZATION - CONTINUED

## M-6.2 Initializing - Continued

(4) NAV UPDATE – Navigation Subsystem Update is performed as follows:

(a) With the Gun Tube in Travel Lock, park the howitzer at a known Survey Control Point (SCP) with the left sprocket within one meter of SCP.

(b) Box in *NAV UPDATE and press the SELECT soft key. This will bring up the NAVIGATION SUBSYSTEM UPDATE menu.

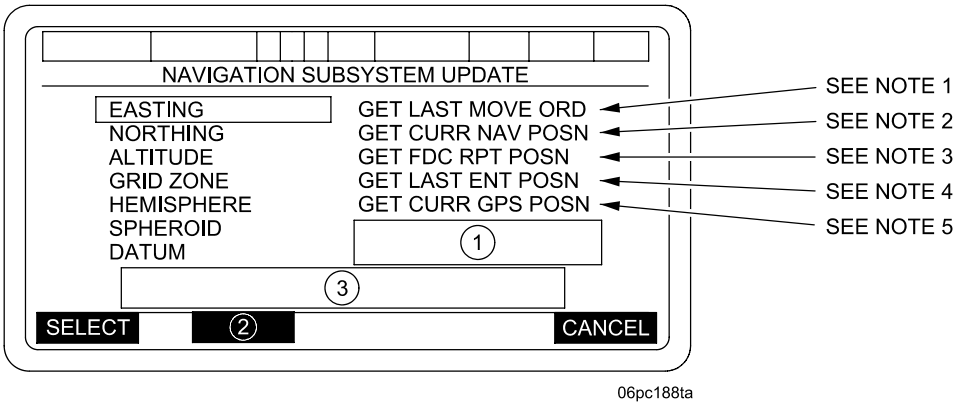


**NOTE**

The datum to be used is selected from the SETUP AND INFORMATION menu (Enter MAP/DATUM menu)

(1) This field contains OPERATOR PROMPTS and selections which depend on the current status of the NAVIGATION SUBSYSTEM

(2) When ALTITUDE SELECTED – **+/-**

otherwise – **USE ALL**

(3) This field contains OPERATOR PROMPTS for updating the values of: EASTING, NORTHING, ALTITUDE, and GRID ZONE:

When EASTING is selected:
Type EASTING 0 to 999999
Press ENT key

When NORTHING is selected:
Type NORTHING 0 to 10000000
Press ENT key

When ALTITUDE is selected:
Type ALTITUDE –1,000 to 10,000
Press ENT key

When GRID ZONE is selected:
Type GRID ZONE 1 to 60
Press ENT key

HEMISPHERE = NORTH or SOUTH
SPHEROID = 1 . . 9 and A . . I and USRDEF (not modifiable by operator)
DATUM = See Table in Appendix J.1 (not modifiable by operator on this display)

# M-6 PDFCS INITIALIZATION - CONTINUED

## M-6.2 Initializing - Continued

NOTE 1: Blank if no Move Order occurred since the last power up of the PDFCS.

NOTE 2: Blank when Navigation Subsystem is not available.

NOTE 3: Available if position data has been sent from the FDC. Selection disappears when PDFCS operator performs Nav Update or Move Order.

NOTE 4: Last coordinates on which position update was performed. Blank if operator has pressed the ARRIVED key at a position area since the last position update.

NOTE 5: Field is blank when the following conditions exist:

a. Navigation subsystem functionality not currently available.

b. GPS position data not currently available from the Navigation subsystem.

c. The GPS position data currently available has an estimated probable error greater than the navigation devices' "poor GPS data limit".

If the available GPS data has an estimated probable error greater than the Navigation device "Good GPS data limit", but less than or equal to the navigation device "Poor GPS data limit" when this menu item is selected, then the following alert will be placed on the soft key line:

USE DGRD GPS DATA? YES NO

If the YES soft key is pressed, then the available GPS data shall be used to update the listing, Northing, and Altitude fields on the menu. If the NO soft key is pressed, then the Easting, Northing, and Altitude fields on the menu will not be updated with the available GPS data.

**NOTE**

Use in accordance with unit SOP.

(c) RESTART REQUIRED - This prompt will appear in field (1). With the gun tube in travel lock, the Howitzer must be positioned at a Survey Control Point (SCP) with the left front sprocket within one meter on the SCP. No selection of RESTART REQUIRED is required, it will happen automatically and a full alignment will be performed. Enter the SCP data of EASTING, NORTHING ALTITUDE and GRID ZONE. When all data is entered, double check the SCP coordinates and SPHEROID/DATUM, and HEMISPHERE displayed on the screen. If it is not correct, make any correction. If it is correct, press the USE ALL soft key. The following prompt will be displayed:

"NAV POSITION UPDATE ABOUT TO START" "ARE YOU SURE" "YES" "NO"

Press the "YES" soft key, and the Navigation Position Update will be started. The SETUP AND INFORMATION menu will appear. The prompt "CMD" will appear in field (6), and then be replaced by the Align Time to Go countdown. Proceed with the rest of Initialization.

(d) NAV POSITION UPDATE - If this prompt is displayed in field (1), then only a Navigation Subsystem Position Update is required. With the gun tube in travel lock, the Howitzer must be positioned at a Survey Control Point (SCP), with the left front sprocket within one meter of the SCP. Enter the SCP data of EASTING, NORTHING and ALTITUDE. When all data is entered, double check the SCP coordinates and SPHEROID/DATUM, GRID ZONE and HEMISPHERE displayed on the screen. If it is not correct, make any correction. If it is correct, press the USE ALL soft key. The following prompt will be displayed:

"NAV POSITION UPDATE ABOUT TO START" "ARE YOU SURE" "YES" "NO"

Press the "YES" soft key, and the Navigation Position Update will be started. The SETUP AND INFORMATION menu will appear. The prompt "CMD" will appear in field (6), and then be replaced by the Align Time to Go countdown. Proceed with the rest of Initialization.

# M-6 PDFCS INITIALIZATION - CONTINUED

## M-6.2 Initializing - Continued

(e) NAV RESTART – If the prompt NAV POSITION UPDATE is highlighted and selected, a message prompt “CHANGE TO RESTART” “YES” “NO” will appear. Press the “YES” soft key. “FORCE NAV RESTART” will appear. Press “USE ALL” then press the “YES” soft key to “ARE YOU SURE” prompt, the SETUP AND INFORMATION menu will be displayed and CMD will be displayed in field (6). This will be replaced with the Align Time to Go count down timer. The Navigation Subsystem aligns itself automatically.

**NOTE**

The Navigation Subsystem has 3 modes of alignment; Stored Heading Alignment, Normal Alignment and Dynamic Alignment.

(1) Stored Heading Alignment – Will occur only if the previous PDFCS shutdown was orderly and the Howitzer or Turret has not moved since the last shutdown. This Alignment will take a maximum of 90 seconds, and will start as soon as the power is applied to the Navigation Subsystem. A NAV UPDATE is still required. But since the Howitzer has not moved since the last shutdown, all the NAV UPDATE data should be correct and only pressing the USE ALL soft key is required. If the Howitzer has been moved since the last shutdown, or the last shutdown was abnormal, or the Howitzer was moving during the last shutdown procedure, the Stored Heading Alignment will automatically be rejected and after a NAV UPDATE is performed the Navigation Subsystem will automatically perform a Normal Align.

(2) Normal Alignment – Will occur when ever a Stored Heading Alignment can not be performed. This alignment will take a maximum of 15 minutes (900 seconds). After the NAV UPDATE is performed and accepted, the Normal Alignment will automatically start, and the Align Time to Go counter will start counting down to 0. During the countdown, a message “OK TO MOVE OR SHOOT” “ACK” may appear before the countdown reaches 0. This means the Navigation Subsystem estimated Azimuth Error is within the bounds that are safe to move or shoot. At this point, a Move Order or Fire Missions may be performed. If the PLGR data is valid (i.e. the “A” is gone) the Align Time to Go counter will continue to countdown while the Howitzer is moving. If the PLGR is not valid (i.e. “A” is on), the timer will stop counting during movement and ZUPTs will be requested.

(3) Dynamic Alignment – A Dynamic Alignment is nothing more than a moving Normal Alignment, but the following conditions must be met: The PLGR must have data (i.e. the “A” is gone) and a NAV UPDATE must have been performed prior to movement. If these conditions are true, then the Howitzer may be moved before the “OK TO MOVE OR SHOOT” “ACK” is displayed. Move Orders and Fire Missions can not be performed, but as long as the PLGR is valid (i.e. the “A” is gone), the Align Time to Go timer will continue to countdown and the Navigation Subsystem will not require a RESTART. Moving prior to the “OK TO MOVE OR SHOOT” “ACK” must be done in accordance with Unit SOP.

# M-6 PDFCS INITIALIZATION - CONTINUED

## M-6.2 Initializing - Continued

**NOTE**

PDFCS supports two modes of Navigation Update; a Position Update and a Navigation Subsystem Restart. Normally, the Navigation Subsystem will align itself automatically, so only a Position Update is required.

(4) To perform a Nav Position Update, if entries are correct per unit SOP. If incorrect, this indicates that FDC DATA Transfer of the Map Mod was not successful in the previous step; press CANCEL, to return to the SETUP AND INFORMATION menu and repeat the FDC DATA XFER procedure to get initialized by FDC. If GRID ZONE, HEMISPHERE and SPHEROID entries are correct, then enter, in turn, EASTING, NORTHING, and ALTITUDE as follows: for each item, first box in the item, then press SELECT key. Use PDFCS keypad to type in value. Press ENT key. Press USE ALL to complete the NAV UPDATE and return to the SETUP AND INFORMATION menu.

If invalid data is entered, the Navigational System will reject it and ask for data re-entry. Press ACK key to acknowledge Alert and re-enter data.

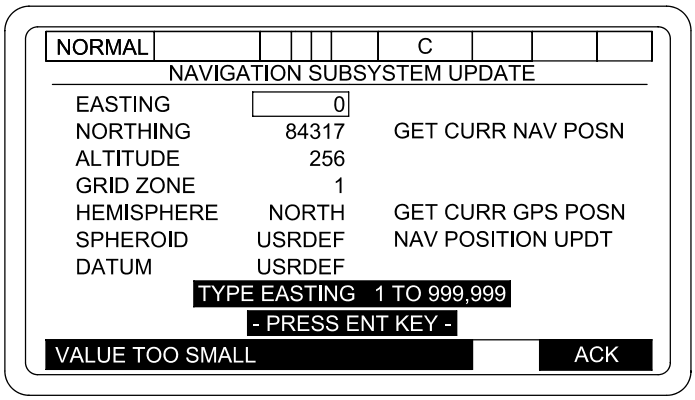


06pc324t

(5) AMMO INVENTORY - Ammunition inventory must be done before the PDFCS will accept a fire mission. Inventories must be complete and accurate before the system initialization is completed. The three parts of the inventory records, Shells, Propellants, and Fuzes, are updated as follows:

# M-6 PDFCS INITIALIZATION - CONTINUED

## M-6.2 Initializing - Continued

(a) Box in AMMO INVENTORY from the SETUP AND INFORMATION menu. Then press SELECT key. This will cause an INVENTORY MANAGEMENT menu to be displayed. Box in either EDIT CURRENT PALADIN or EDIT FDC PROVIDED data. Press SELECT key. This will cause an INVENTORY MANAGEMENT menu to be displayed.

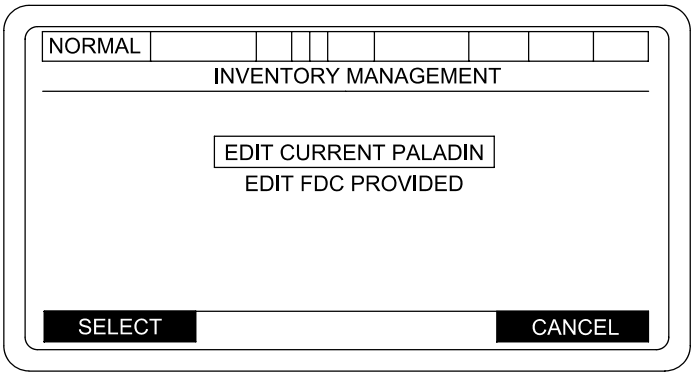


06pc654m

### NOTE

- This menu will not be displayed when FDC provided Inventory Data is not available at the PDFCS.
- You can request the POC to provide your Ammo Inventory from the FDC if you know it is a correct count. Use FDC DATA XFER to GET AMMO STATUS (para M-6.2.k(2)).

# M-6 PDFCS INITIALIZATION - CONTINUED

## M-6.2 Initializing - Continued

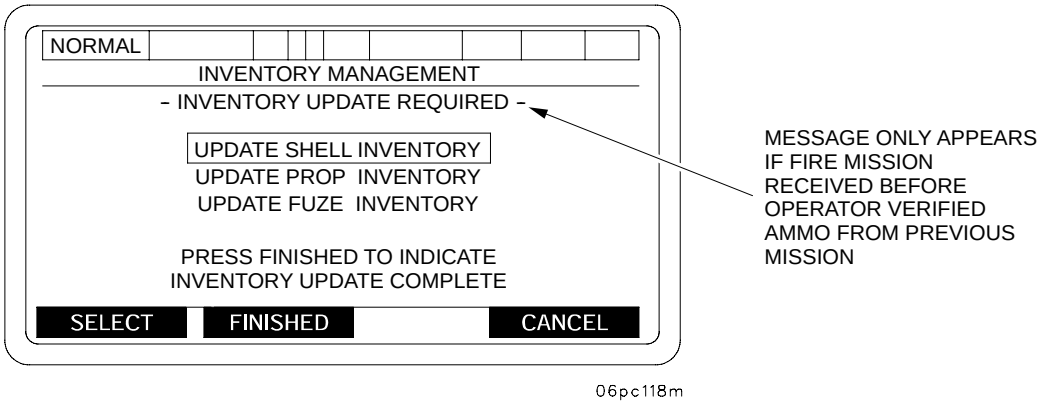


**NOTE**

If a Fire Mission is activated while in any of the ammunition inventory submenus, all valid complete entries will be saved.

FINISHED = When the Finished key is pressed the ammunition inventory shall be reviewed to insure each group of projectiles has at least one propellant and each group of propellants has at least one projectile. If a projectile is found without a propellant or a propellant without a projectile, the PDFCS will display Projectile/Propellant Mismatch menu.

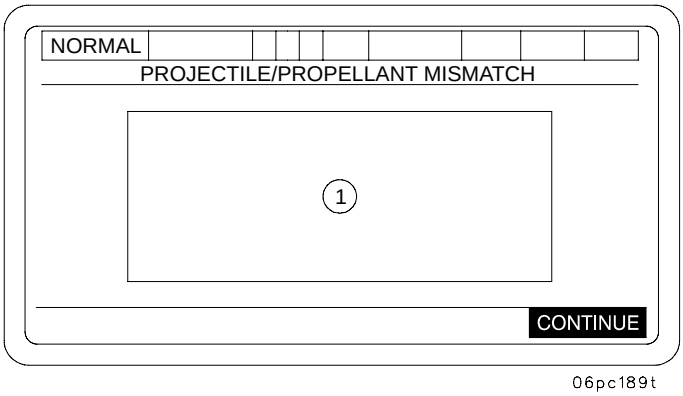


CONTINUE = Will display INVENTORY MANAGEMENT menu.

1 = NO "US" PROJECTILE MATCH and or
NO "US" PROPELLANT MATCH

**NOTE**

Use Up and DOWN keys to scroll.

# M-6 PDFCS INITIALIZATION - CONTINUED

## M-6.2 Initializing - Continued

(b) Box in UPDATE SHELL INVENTORY. Press SELECT key. This will cause an UPDATE SHELL INVENTORY menu to be displayed.

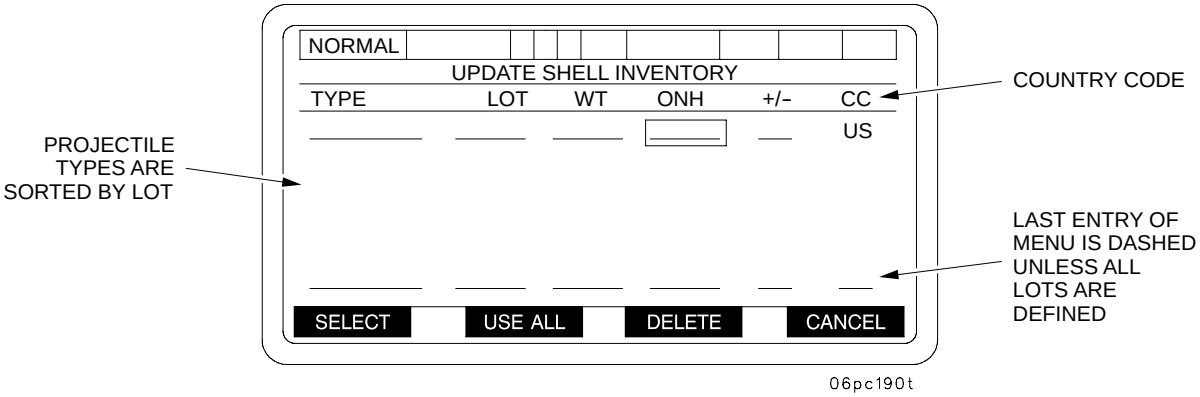


### NOTE

- Pressing the DELETE key will cause the selected shell to be deleted from inventory no matter where on the inventory line the selection box is positioned.
- If the operator presses the “DELETE” key or attempts to modify the lot for a shell that is currently being used for a fire mission, the operator warning “UNALLOWED - USED BY FM” “ACK” will be displayed.

(c) To add a new entry, box in the first blank line. Press SELECT key. This will cause an UPDATE SHELL INVENTORY-SELECT SHELL TYPE menu to be displayed.

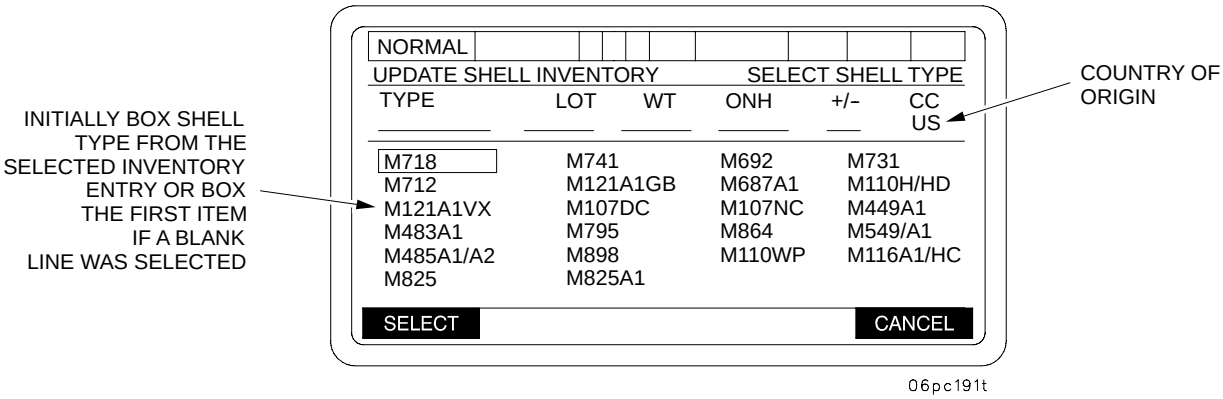

# M-6 PDFCS INITIALIZATION - CONTINUED

## M-6.2 Initializing - Continued

(d) Press SELECT key to display a SELECT LOT menu.

(e) Box in Lot choice and press SELECT key. This will cause a lot designator to be assigned to the selected shell. Once a lot selection is made, that designator (letter) will disappear. This prevents using same lot twice.

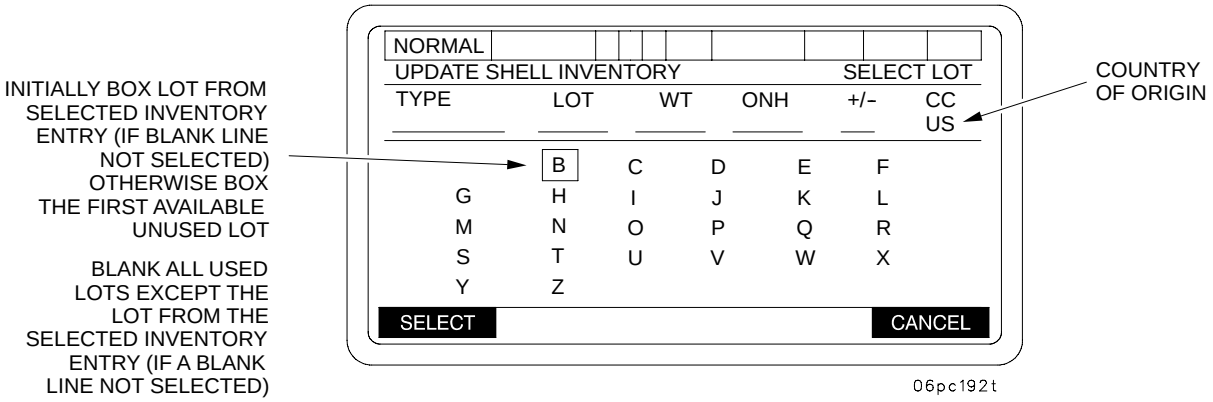


(f) Box in WT choice and press SELECT key; an ENTER SHELL WEIGHT menu will be displayed. If shell weight is not the same as default weight, type in new weight and press ENT key. This will cause the UPDATE SHELL INVENTORY menu to be displayed.

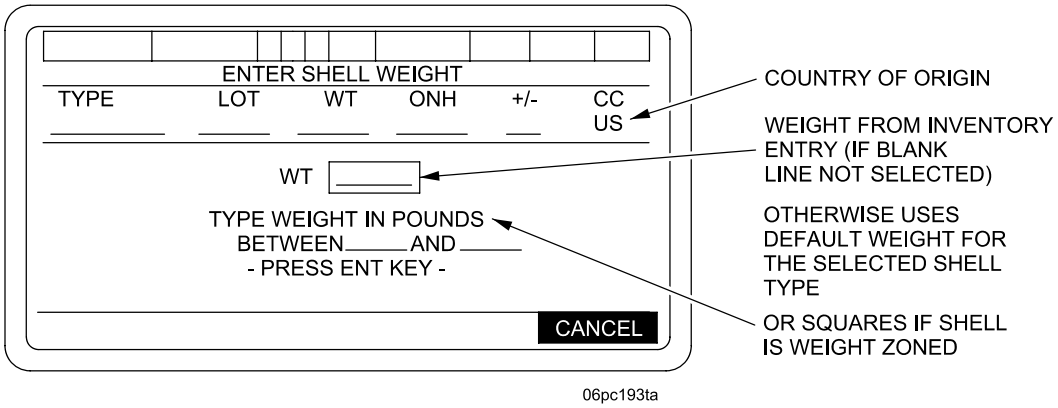


**NOTE**

Weight will be displayed in pounds or squares.

# M-6 PDFCS INITIALIZATION - CONTINUED

## M-6.2 Initializing - Continued

(g) Move box to proper column (ONH, ADD or SUB) in desired line and press SELECT key. A prompt to TYPE SHELL QUANTITY will be displayed. Type in new quantity and press ENT key. New quantity will be displayed.

(h) When all shell data has been updated or edited, press USE ALL key to return to INVENTORY MANAGEMENT menu.

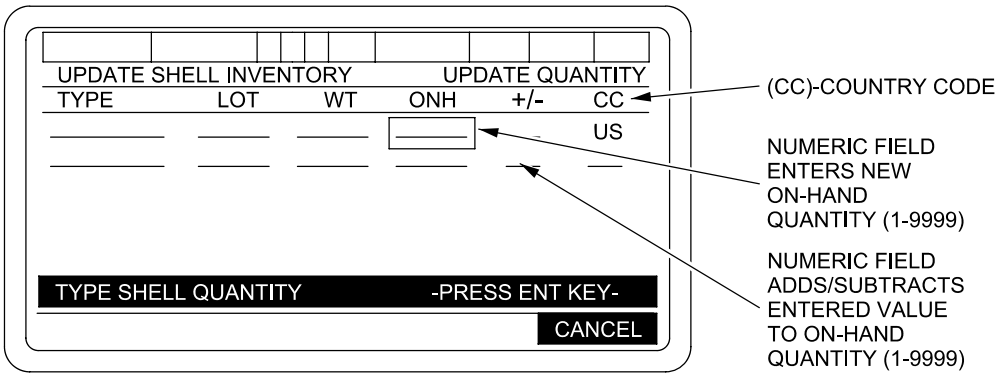


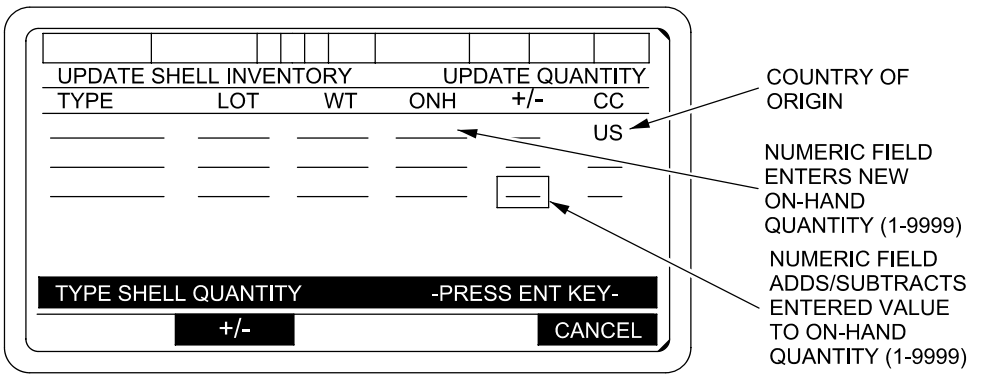


06pc194ta

# M-6 PDFCS INITIALIZATION - CONTINUED

## M-6.2 Initializing - Continued

(i) Box in UPDATE PROP INVENTORY on INVENTORY MANAGEMENT (UPDATE) menu. Press SELECT key to display UPDATE PROP INVENTORY menu.

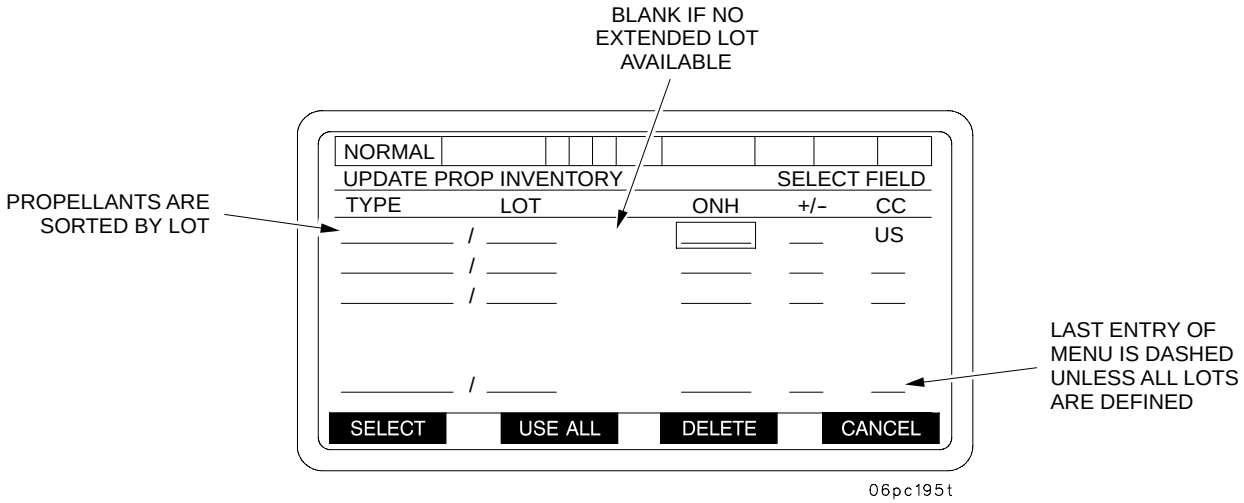


**NOTE**

- The DELETE key shall cause the selected propellant to be deleted from inventory no matter where on the inventory line the selection box is positioned.
- If the operator presses the “DELETE” key or attempts to modify the lot for a propellant that is currently being used for a fire mission, the PDFCS shall display the operator warning “UNALLOWED - USED BY FM” “ACK”.

(j) To add a new entry, box in the first blank line on UPDATE PROP INVENTORY menu. Press SELECT key to display SELECT PROP TYPE menu. Box in propellant type and press SELECT key.

**NOTE**

The data displayed on the third line of this display is that given in the selected inventory entry (either a blank line or an existing entry) and is updated as entries are made.

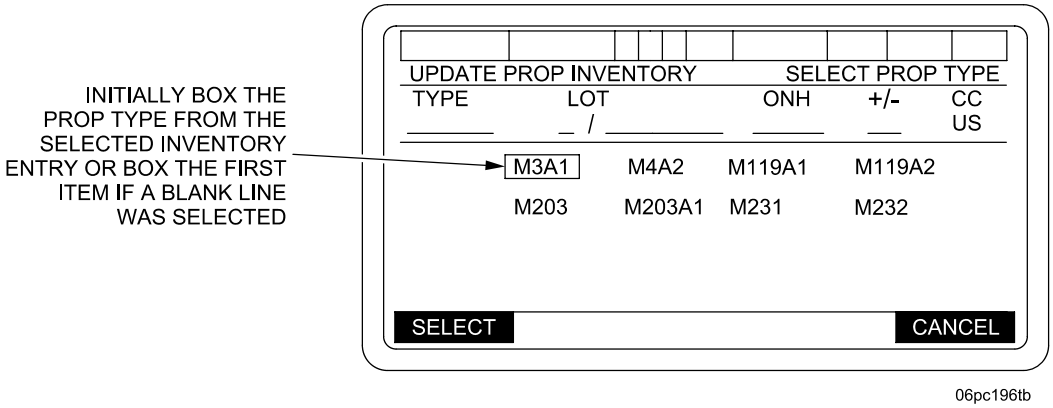

# M-6 PDFCS INITIALIZATION - CONTINUED

## M-6.2 Initializing - Continued

(k) When the SELECT key on the Select Prop Type screen is pressed the ENTER LOT menu will be displayed.

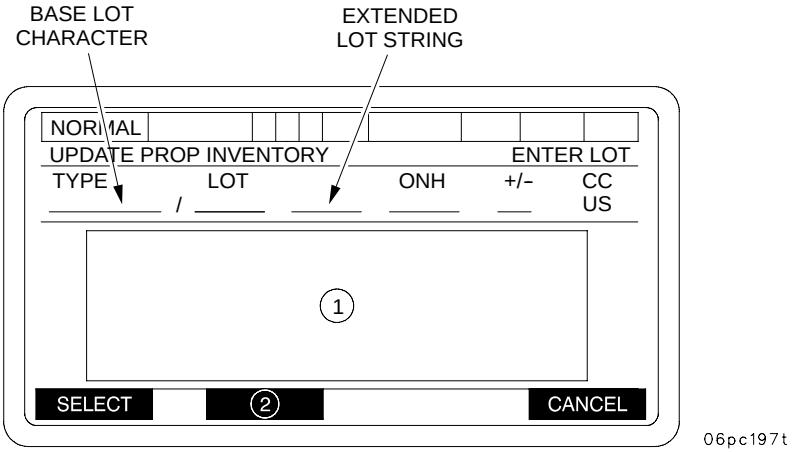


(1) On initial entry to this display, the cursor box is on the base lot from the selected inventory entry (if a blank line was not selected). Otherwise, box the first available unused base lot letter. The base lot location in the upper display is highlighted in reverse video. All base lots currently in the propellant inventory are deleted from the selection area (except for the selected inventory entry base lot if not on a blank inventory line).

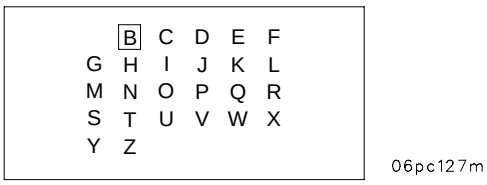


After the base lot is selected, the extended lot editing function is entered. All alphabetic characters as well as numeric, virgule, hyphen, and highlight movement characters are made available for operator selection. The operator will be allowed to enter blanks while editing the extended lot string, but they will be removed when the operator selects "USE ALL". The reverse video highlight is initially moved to the first character position (left most character) in the extended lot string. Highlight movement will wrap at the ends of the extended lot string. Pressing the CLR key will erase the character under the reverse video highlight.

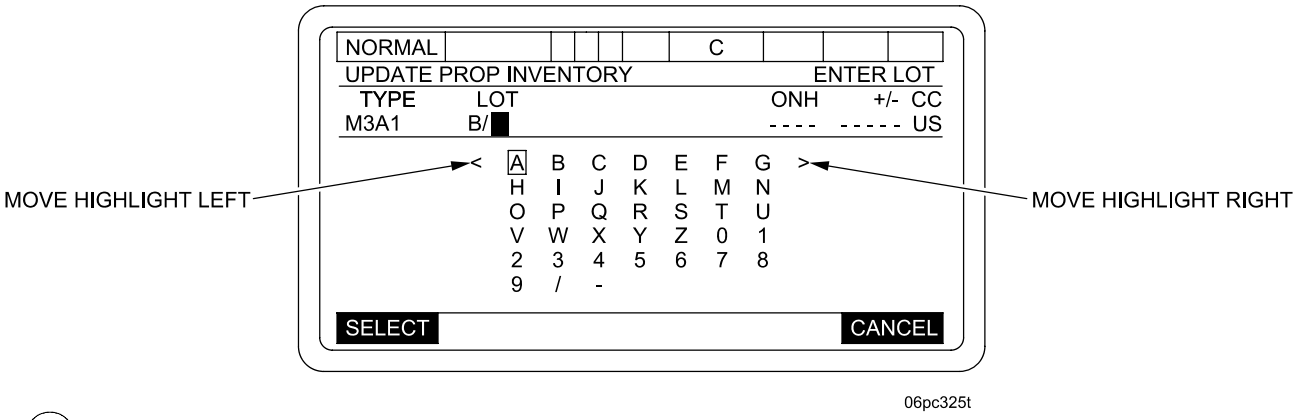


(2) Blank - until extended lot string editing begins.
USE ALL - while editing the extended lot string.

# M-6 PDFCS INITIALIZATION - CONTINUED

## M-6.2 Initializing - Continued

When USE ALL key is pressed the following checks occur:

- The extended string is compared with other extended lot codes in inventory. If a duplicate extended lot string is found, a short error message will be displayed.

  DUPLICATE EXTENDED LOT FOUND | ACK

  When ACK is pressed, the extended lot editing function will be resumed and the highlight will be at the last character position prior to pressing USE ALL. Before pressing USE ALL, enter a different extended lot.

- The extended lot string is compared with other extended codes in the MVV Lot Database. If a duplicate extended lot string is found and there is a propellant model mismatch, the error message

  MVV EXTENDED LOT PROP CONFLICT | ACK

  shall be generated. When ACK is pressed, the extended lot editing function shall be resumed and the highlight shall be at the last character position prior to pressing USE ALL.

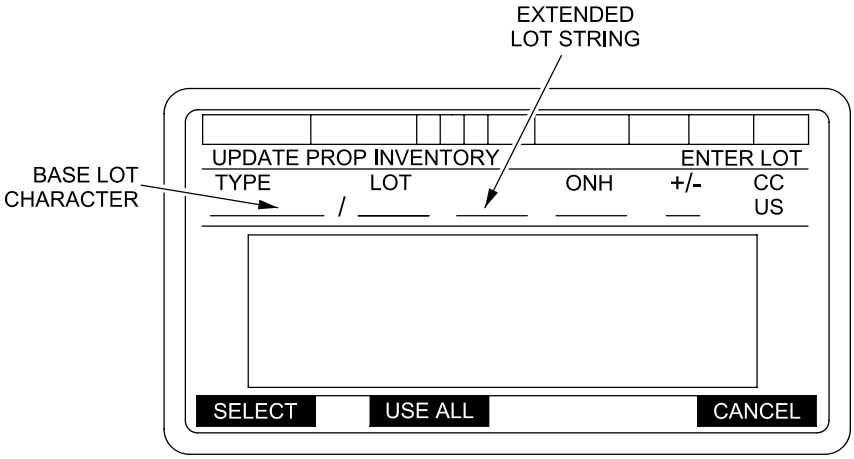


06pc198ta

# M-6 PDFCS INITIALIZATION - CONTINUED

## M-6.2 Initializing - Continued

(l) When the USE ALL key is pressed, the Update Prop Inventory menu is displayed. Box in either +/- column and press SELECT key. Type in new quantity and press ENTER key. New quantity will be displayed.

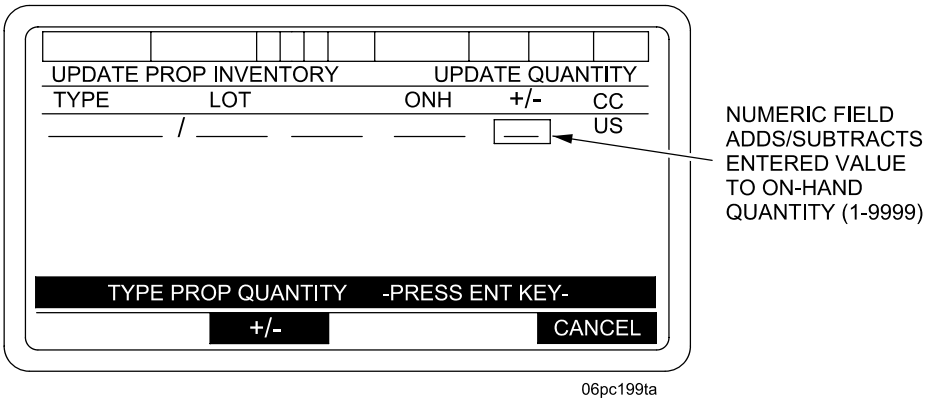


### NOTE

- The +/- soft key will appear when the +/- column is selected. If you select the ONH column, the +/- soft key will not appear.
- Minus values must not exceed the amount on-hand. Plus values must not cause the on-hand total to exceed 9999. Either of these conditions shall cause the error message: "VALUE TO SMALL" "ACK" or "VALUE TOO BIG" "ACK".

(m) When propellant types have been updated or edited, press USE ALL key. This will cause the INVENTORY MANAGEMENT menu to be displayed.

(n) Box in UPDATE FUZE INVENTORY on INVENTORY MANAGEMENT menu. Press SELECT key to display UPDATE FUZE INVENTORY - SELECT FIELD menu. To add a new entry, move box to the first blank line. Press SELECT key. A SELECT FUZE TYPE menu will be displayed.

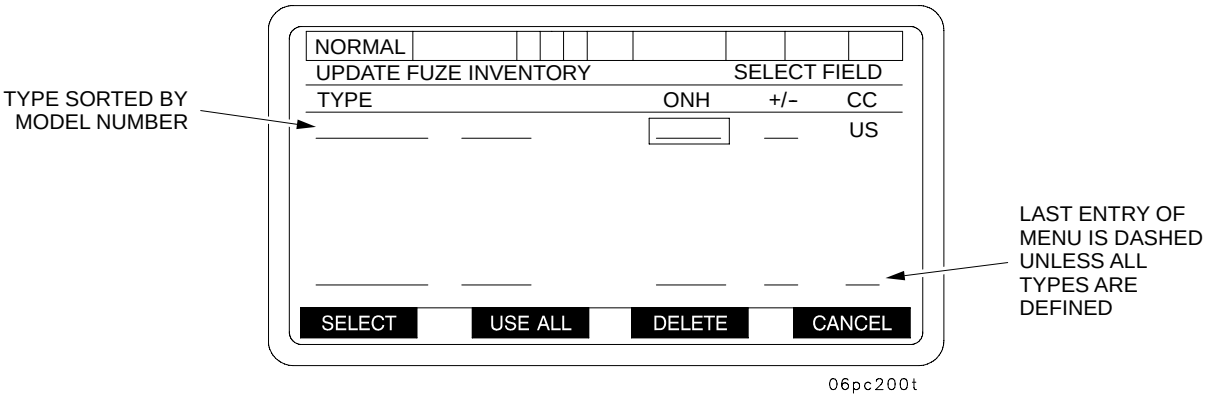

# M-6 PDFCS INITIALIZATION - CONTINUED

## M-6.2 Initializing - Continued

### NOTE

- The DELETE key shall cause the selected fuze to be deleted from inventory no matter where on the inventory line the selection box is positioned.
- If the operator presses the “DELETE” soft key or attempts to modify the fuze model that is currently being used for a fire mission, the PDFCS shall display the operator warning “UNALLOWED - USED BY FM” “ACK”.

(o) Box in FUZE TYPE and press SELECT key.

### NOTE

The data displayed on the third line of this display is that given in the selected inventory entry (either a blank line or an existing entry) and is updated as entries are made.

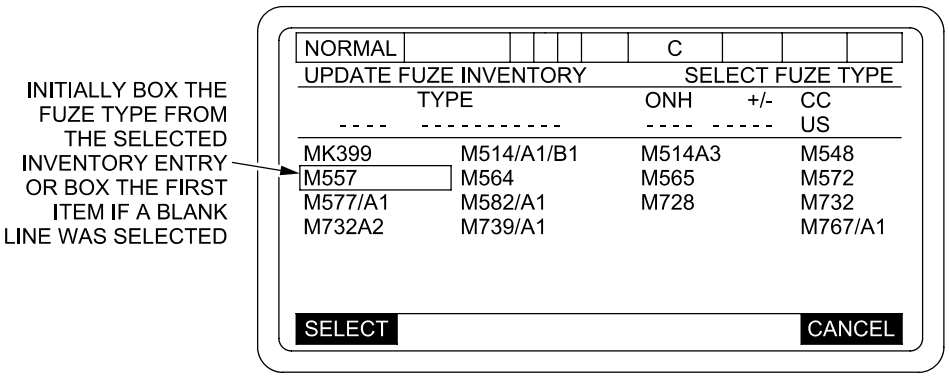


06pc326t

(p) Move to proper column (ONH, or +/-). Press SELECT key.

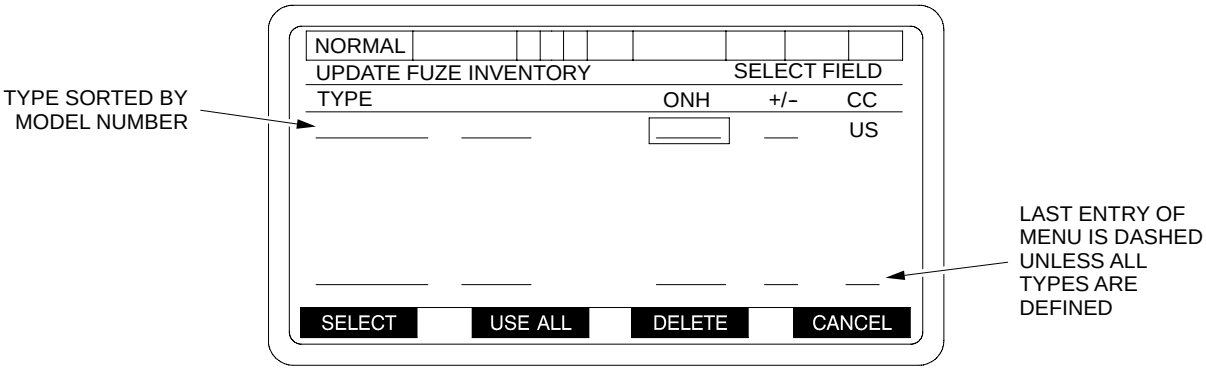


06pc200t

# M-6 PDFCS INITIALIZATION - CONTINUED

## M-6.2 Initializing - Continued

(q) Type in quantity and press ENT key.

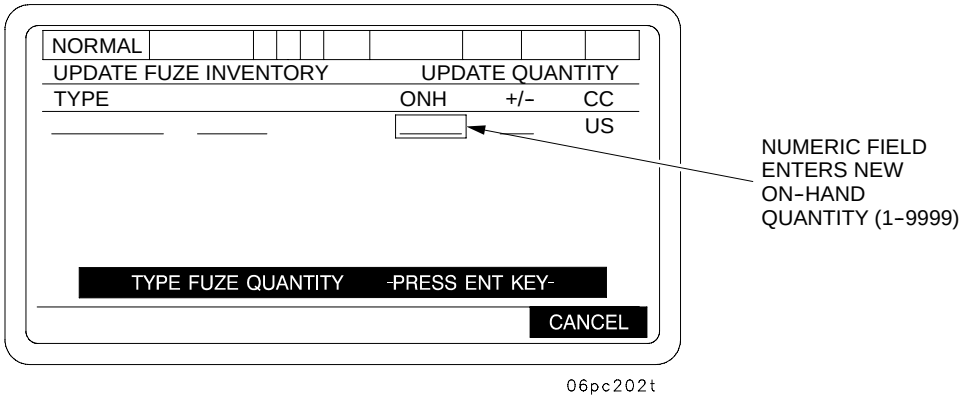


### NOTE

- The +/- Soft key will appear when the +/- column is selected. If you select the ONH column, the +/- Soft key will not appear.
- Minus values must not exceed the amount on hand. Plus values must not cause the on-hand total to exceed 9999. Either of these conditions shall cause the error message: "VALUE TO SMALL" "ACK" or "VALUE TO BIG" "ACK".

(r) When fuzes have been updated, press USE ALL key to return to INVENTORY MANAGEMENT menu.

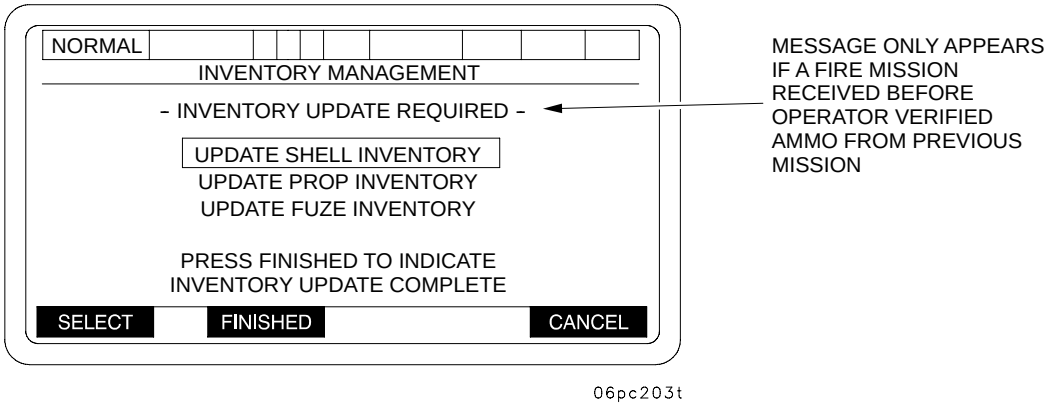

# M-6 PDFCS INITIALIZATION - CONTINUED

## M-6.2 Initializing - Continued

### NOTE

- If a fire mission is activated while in any of the ammunition inventory sub-menus, all valid complete entries with consistent projectile/ propellant, country code matches shall be saved.
- If the CANCEL Soft key is selected all edits will be ignored.
- When the FINISHED soft key is pressed the ammunition inventory shall be reviewed to insure each group of projectiles has at least one propellant and each group of propellants has at least one projectile. If a projectile group is found without a propellant or a propellant without a projectile, the PDFCS will display PROJECTILE/PROPELLANT MISMATCH menu. Pressing the CONTINUE Soft key on this menu will return operator to the INVENTORY MANAGEMENT menu, at which time the operator has to update SHELL/PROP inventory.

(s) When all ammunition data has been entered or updated, press FINISHED key to display the SETUP AND INFORMATION menu.

(6) PROPELLANT TEMPERATURE - Must be entered in order to complete initialization. After ammunition has been received, a propellant temperature should be obtained by the crew using a calibrated propellant temperature gage. Propellant temperatures are entered as follows:

### NOTE

- Accurate propellant temperatures must be entered in order for PDFCS to accurately compute Muzzle Velocity Variances.
- Numerical value must be entered before sign. Default sign is (+).

(a) Box in PROP TEMP from SETUP AND INFORMATION menu. Press SELECT key. A PROPELLANT TEMPERATURE menu will be displayed. Type in correct temperature and press ENT key.

# M-6 PDFCS INITIALIZATION - CONTINUED

## M-6.2 Initializing - Continued

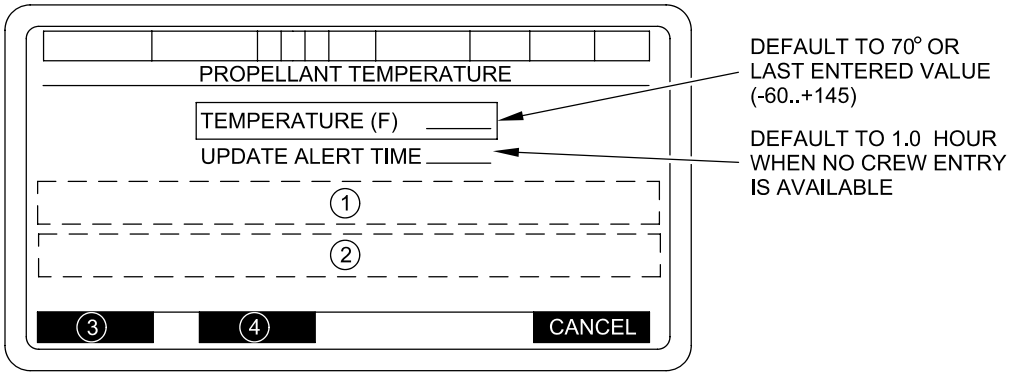


06pc204ta

(1) TIME TO GO XX:XX (HOURS:MINUTES) OR TIME EXCEEDED

(2) WHEN TEMPERATURE SELECTED
TYPE TEMPERATURE IN FAHRENHEIT
DEGREES: -60 TO +145
- PRESS ENT KEY -
WHEN UPDATE ALERT TIME SELECTED
TYPE UPDATE TIME IN 0.5 HOUR
INCREMENTS 0.5 TO 2.0
- PRESS ENT KEY -

(3) BLANK - When TEMPERATURE or UPDATE ALERT TIME selected
SELECT - When item is not selected

(4) USE ALL - When no item is selected
+/- When temperature is selected
BLANK - When UPDATE ALERT TIME is selected

(b) If a temperature outside allowable range is input, operator alert “VALUE TOO BIG” or “VALUE TOO SMALL” will appear when ENT key is pressed. The ACK key must be pressed to return to the PROPELLANT TEMPERATURE menu to enter correct temperature.

# M-6 PDFCS INITIALIZATION - CONTINUED

## M-6.2 Initializing - Continued

(c) A propellant temperature is input during initialization by selecting PROP TEMP from the SETUP AND INFORMATION menu to display the PROPELLANT TEMPERATURE menu. The operator is allowed to enter the propellant temperature. If no temperature is entered the PDFCS will use the default value of 70 degrees F. To enter the propellant temperature, place cursor to TEMPERATURE (F), press the soft key under SELECT prompt. An operator prompt "TYPE TEMPERATURE IN FAHRENHEIT DEGREES -60 TO +145 --PRESS ENTER KEY" will appear. Type in propellant temperature and press ENT key. In addition, the PDFCS incorporates a timed audible and visual alert to the operator to warn that a propellant temperature update is required. The time interval to use for the audible and visual alerts are selectable on the PROP TEMP menu, from 30 minutes (0.5 hours) to 120 minutes (2.0 hours) in 30 minute increments. The alert time is defaulted to 1.0 hour when no time is entered by the operator. To set alert time, place cursor on UPDATE ALERT TIME, and press soft key under SELECT prompt. An operator prompt, "TYPE UPDATE TIME IN 0.5 HOUR INCREMENTS 0.5 TO 2.0, PRESS ENTER KEY. When the operator has successfully entered the propellant temperature and alert time return to SETUP AND INFORMATION menu by pressing soft key under USE ALL prompt. When correct propellant temperature and alert time have been entered, pressing USE ALL will display the SETUP AND INFORMATION menu.

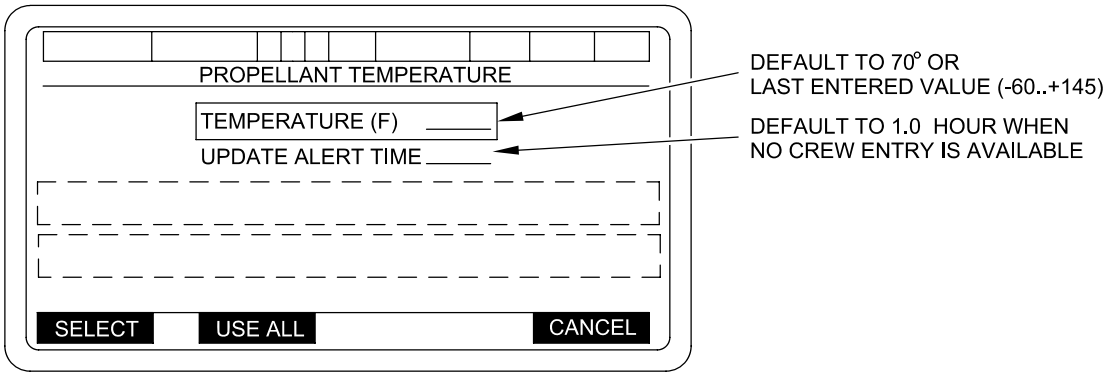


06pc134mb

(7) TOT RESPONSE TIME - This is used to set crew time response for a specific fire mission. The data tells the PDFCS how much advance warning a crew needs before a Time on Target (TOT) mission is to be fired. This data is entered as follows:

(a) Box in TOT RESPONSE from SETUP AND INFORMATION menu. Press SELECT key to display a TIME ON TARGET CREW RESPONSE TIME menu.

(b) Enter data for response time and press the ENT key. This will return the display to the SETUP AND INFORMATION menu.

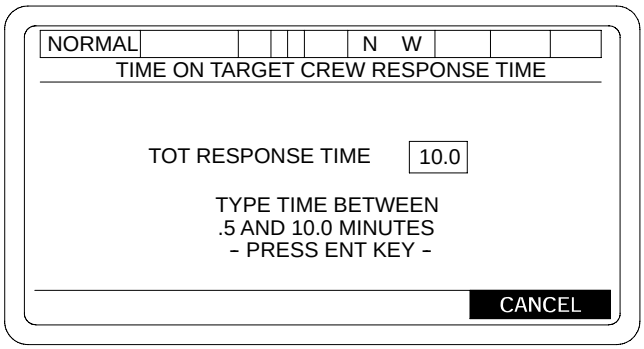


06pc136m

# M-6 PDFCS INITIALIZATION - CONTINUED

## M-6.2 Initializing - Continued

(8) LOAD ELEVATION – This data is entered in the PDFCS to specify an elevation that the gun tube will automatically return to after firing when the LOAD key is pressed on the PDU panel. Enter LOAD ELEVATION as follows:

(a) Box in LOAD ELEVATION from the SETUP AND INFORMATION menu. Press SELECT key to display a TUBE LOAD ELEVATION menu.

**CAUTION**

Do not enter an elevation greater than 300 mils. Settings above 300 mils may result in breech failing to close and could cause unnecessary wear on spring pack.

**NOTE**

Numerical value must be entered before sign. Default sign is (+).

(b) Type in desired elevation data and press ENT key. The SETUP AND INFORMATION menu will be displayed.

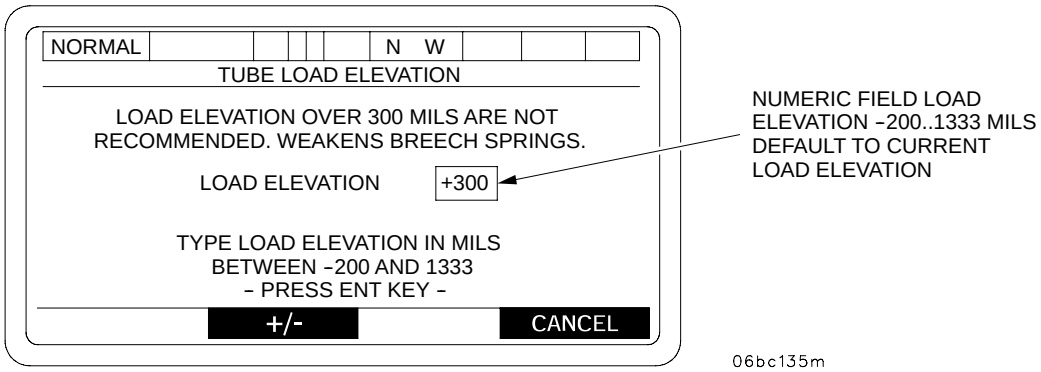

# M-6 PDFCS INITIALIZATION - CONTINUED

## M-6.2 Initializing - Continued

(9) SECTOR OF FIRE – Used to define the howitzer's sector of fire. Data is entered as follows:

(a) Box in SECTOR OF FIRE from SETUP AND INFORMATION menu. Press SELECT key to display DEFINE SECTOR OF FIRE menu.

(b) Box in LEFT LIMIT OF SECTOR. Press SELECT key. Enter data. Press ENT key. Move box to AOF. Press SELECT key. Enter data. Press ENT key. Move box to RIGHT LIMIT OF SECTOR. Press SELECT key. Enter data. Press ENT key.

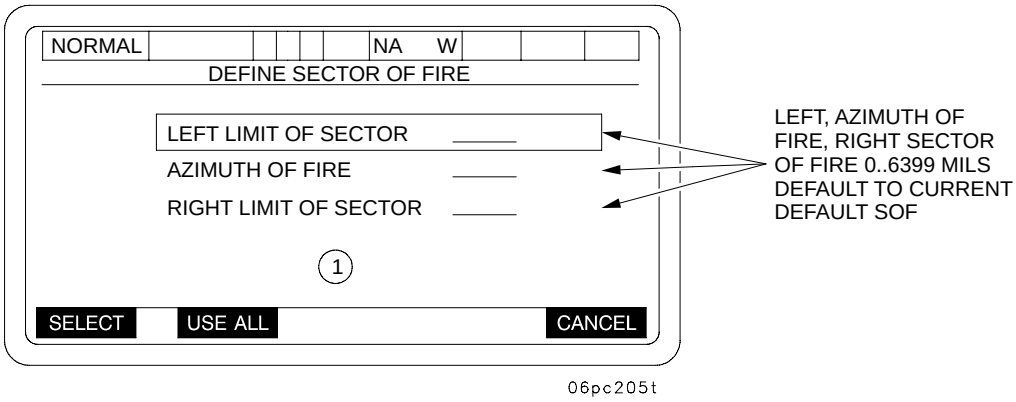


IF LEFT = RIGHT

ERROR - LEFT AND RIGHT EQUAL ACK

If AZIMUTH OF FIRE is not to RIGHT OF LEFT LIMIT and LEFT OF RIGHT LIMIT.

ERROR - AZIMUTH OF FIRE NOT IN SECTOR ACK

(1) BLANK: No selection made

Selection made:

"TYPE AZIMUTH BETWEEN 0 AND 6399 MILS"

"PRESS ENT KEY"

### NOTE

- Operator entered Sector of Fire data will be used by the PDFCS during Move Orders to help orient the vehicle during emplacement at a Firing Point/Firing Area.
- During Emplacement after a Move Order, this AOF will be "Base Azimuth" for 3200 Deflection.
- SECTOR OF FIRE entered by the operator will be used to calculate ballistic if FDC has not sent SECTOR OF FIRE for prescribed location (FIRING AREA/POINT).

# M-6 PDFCS INITIALIZATION - CONTINUED

## M-6.2 Initializing - Continued

(c) When all correct data has been entered, press USE ALL key to enter data. The following message will be displayed: “ARE YOU SURE” “YES” “NO”. If “YES” is selected the sector of fire will be updated and the display will return to SETUP AND INFORMATION menu. If “NO” is selected the message will be removed for re-entry of data. Operator entered Sector of Fire data will update the Site Data display.

(d) When all initialization data (Asterisk items from SETUP AND INFORMATION menu) has been entered, and the navigation subsystem alert “OK TO MOVE OR SHOOT”, “ACK” has been displayed and the ACK key pressed, then press CANCEL key on SETUP AND INFORMATION menu to bring up a SECTION IN ORDER AT INITIALIZATION POINT display.

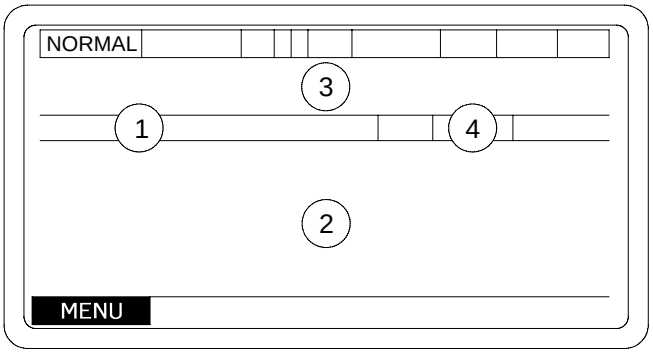


06pc138m

1 “FPF/PRI EXISTS” FPF/PRI TARGET EXISTS IN STORED TARGET TABLE
“NO FPF/PRI EXISTS” - FPF/PRI TARGET DOES NOT EXIST IN STORED TARGET TABLE

2 “SECTION IN ORDER AT LOGISTICS POINT” - ARRIVAL LOCATION IS LOGISTICS POINT “SECTION IN ORDER AT INITIALIZATION POINT” - ARRIVAL LOCATION IS INITIALIZATION POINT

3 DO NOT MOVE - NO FPF/PRI EXISTS
DO NOT MOVE / DO NOT LOAD - FPF-PRI TARGET EXISTS

4 TUBE TEMPERATURE STATUS

## M-6 PDFCS INITIALIZATION - CONTINUED

### M-6.3 Initialization After an Orderly Shutdown.

**WARNING**

When operating the PLGR on external power with BA-5800 lithium battery installed, the battery may explode. Ensure battery is removed before connecting power cable to prevent serious injury or death.

**NOTE**

PMVS must be installed and connected prior to turning the vehicle MASTER power switch ON.

During PDFCS operation, it may become necessary to power down and then back up; e.g., a system lockup occurs.

**NOTE**

After PDFCS has been powered down, the PDFCS will power up and be operational in approximately 3-4 minutes.

Power down in this form causes an orderly shutdown, and some of the PDFCS data is saved. An orderly shutdown also occurs when the power is turned off after normal operations. Some of the data saved on orderly shutdown is Network Setup, Ammo Inventory, Navigation Data (location where system was powered down), TOT Response, Load Elevation, and the last operator-entered Sector of Fire. When the system is turned back on from an orderly shutdown, step-by-step initialization is not necessary, although action on all asterisk marked items on the SETUP AND INFORMATION menu must be accomplished. The process for initialization after an orderly shutdown is as follows:

a. System Power Up. Set MASTER switch and Power Conditioner Unit-2 circuit breakers to ON.

With the PLGR in the PLGR mount and all external cables attached, press the ON/BRT key on the PLGR key pad. The PLGR should power up automatically and perform its self-test (BIT). Operate the PLGR in accordance with the PLGR TM 11-5825-291-13.

If the PLGR does not have a current key (i.e. the PLGR was previously “zeroized”, newly installed or the key has expired), then load a valid key in accordance with the PLGR TM 11-5825-291-13, Section 3.6.

**NOTE**

To load a key, the DRUH must be off, or the P4 DRUH-PLGR Signal Connector must be disconnected to cause a PLGR COM FAIL. Simple re-attachment of P4 DRUH-PLGR Signal Connector after PLGR keying will automatically cause DRUH-PLGR communications to resume if DRUH is on.

If the PLGR antenna has a clear view of the sky, turn PLGR on. If the antenna’s view of the sky is blocked (e.g. the vehicle is in a building, under tree cover or parked next to a large structure), move vehicle until the PLGR is clear.

If the vehicle can not be moved, keep PLGR turned off until the vehicle can be moved to a location with a clear view of the sky.

# M-6 PDFCS INITIALIZATION - CONTINUED

## M-6.3 Initialization After an Orderly Shutdown - Continued

**NOTE**

- If the PLGR is off, the Navigation Subsystem will still accept initialization data from the PDFCS for inertial operation and the Navigation System will operate as before.
- Guidelines for conditions and times for the PLGR to obtain position data acceptable by the PDFCS.

(1) If the antenna has a clear view of the sky and PLGR has a valid position, current GPS time, current GUV key, and has stored a current satellite almanac, PLGR will be acceptable for use in about three minutes following the first turn-on of the day. It will take about 90 seconds for subsequent turn-ons. These are the normal operating conditions.

(2) If the antenna has a clear view of the sky and PLGR has a current GUV key but the PLGR doesn't have a valid position, current GPS time, or current satellite almanac, it may take up to 20 minutes after turn-on for the PLGR to output data of acceptable accuracy.

(3) If the PLGR has a valid position, current GPS time, current key, and current satellite almanac, but the antenna is masked from a clear view of the sky when PLGR is turned on, it may take up to 20 minutes to get acceptable data after the vehicle is moved to a location with a clear view of the sky. This results from the PLGR initiating a search for all possible satellites if it can't lock on to those expected, for its current position, time, and almanac, within a reasonable time interval.

(4) If the PLGR doesn't have a current key, its data won't be acceptable for use by the PDFCS. However, assuming a clear view of the sky, it can be turned on to initialize position, time, and satellite almanac in about 20 minutes. Then when a valid key is loaded, the PLGR will be ready to go within three minutes.

**NOTE**

PMVS must be installed and connected prior to turning the vehicle MASTER power switch on.

Make sure TRAINING switch on PDU is OFF. Set POWER switch on PDU to ON. When power is first applied to the PDFCS, the display will be blank and the PDFCS will automatically perform its internal self-test (BIT). Next a screen will be displayed with this message "INITIALIZATION IN PROGRESS."

**NOTE**

- The time lapse between first two screens can range from 3 to 5 minutes.
- If screen stays blank for more than 7 minutes, power down system.

A "SYSTEM VERIFICATION FAILURE" screen may be displayed only if the SYSTEM VERIFICATION report indicates a failure.

# M-6 PDFCS INITIALIZATION - CONTINUED

## M-6.3 Initialization After an Orderly Shutdown - Continued

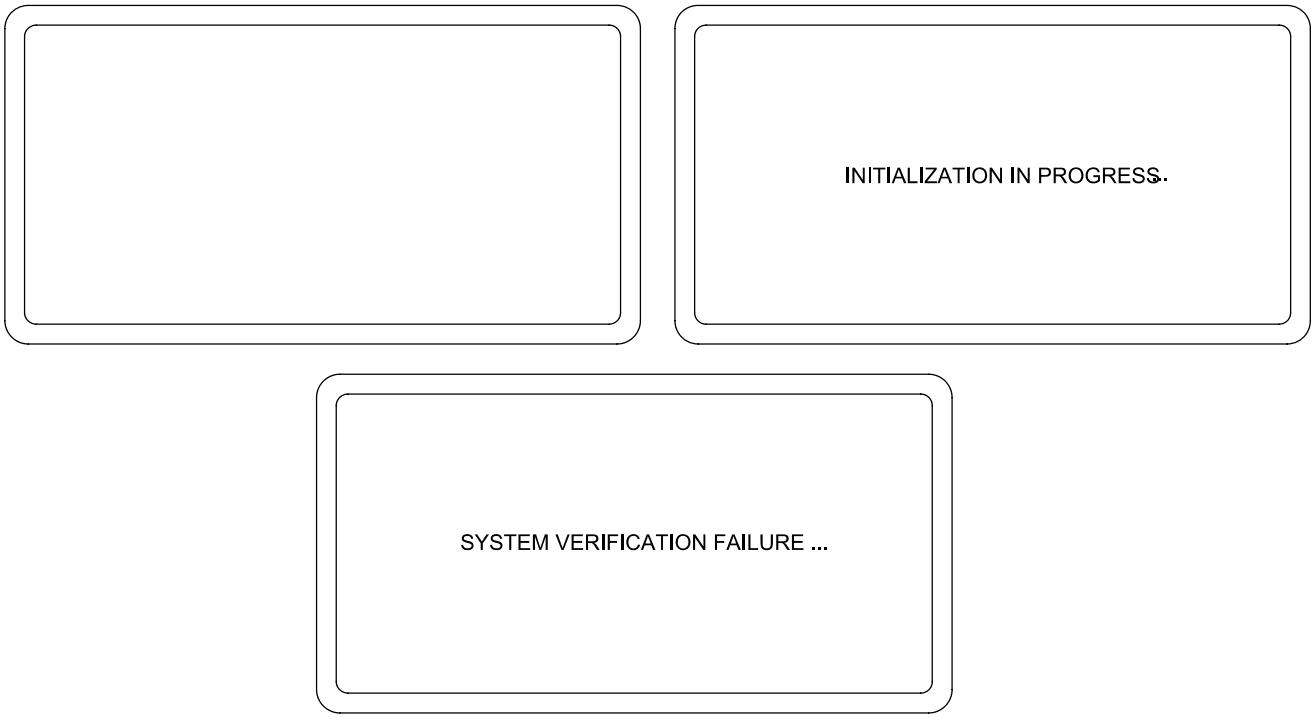


06pc272t

After the PDFCS powers up, the PLGR screen should read:

REMOTE CONTROL
Only ZEROIZE key
activated

At this point the PLGR key pad will become inactive. The only PLGR operation allowed using the key pad is EMERGENCY ZEROIZE.

If this message is not displayed on the PLGR screen, and the Low Priority Message “GPS OUT - PLGR DISCONNECTED” is not displayed on the PDU, ensure that the DRUH-PLGR Signal Connector (P4) plug on the W17A cable is connected and secure. Once this PLGR screen is displayed, proceed with system initialization.

### NOTE

- NAV SUBSYSTEM includes: VMS, DRUH, VMS Modems
- PCU-2 SUBSYSTEM includes: PCU-2 and both Back-Up Batteries
- The switches on the PCU-2 are circuit breakers. They should be left ON at all times, so they will not wear out from being turned off and on constantly.

# M-6 PDFCS INITIALIZATION - CONTINUED

## M-6.3 Initialization After an Orderly Shutdown - Continued

(5) This screen displays the subsystems that are checked by BIT. As the subsystems are checked, the dashed lines will change to a subsystem status (OK, DEGRADED, OUT, - -). The - - appears on the MVS status line when the PDFCS could not be connected to the MVS. This screen also identifies the system software version.

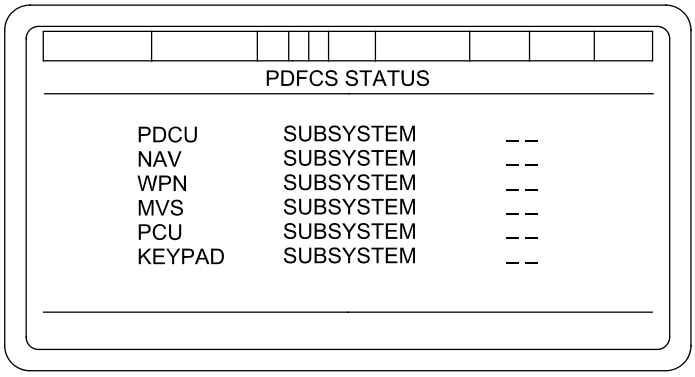


06pc071mb

In the event of a failure during POWER UP STATUS, the message, DEGRADED-ACK TO CONTINUE, will be displayed on the bottom line of the display. To continue, depress soft key under ACK. After the self-test is complete, SELECT OPERATIONAL MODE menu is displayed.

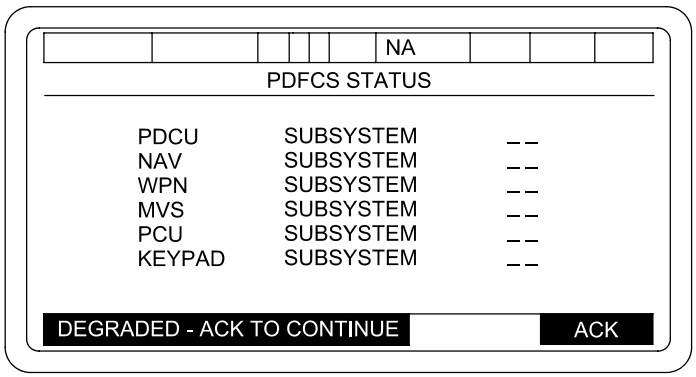


06pc074mb

**NOTE**

If PCU-2 contains an incorrect configuration, the PDFCS will not allow the operator to select normal operations until a correct PDU software configuration is downloaded.

# M-6 PDFCS INITIALIZATION - CONTINUED

## M-6.3 Initialization After an Orderly Shutdown - Continued

When configuration verification checking indicates that an invalid howitzer software configuration is present, a short error message “INVALID SOFTWARE CONFIGURATION” “ACK” will appear on the soft key label line of the PDU.

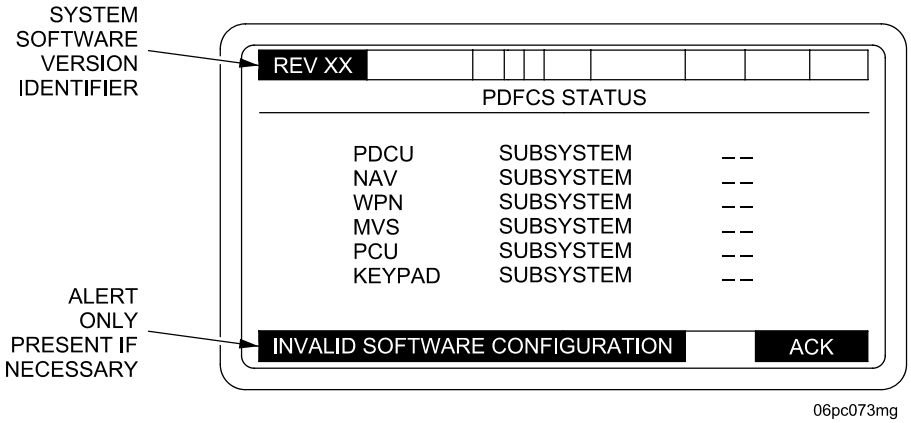


06pc073mg

*Discuss Boresight entry requirements during initial POWER-UP and PDU FAULT LAMPS

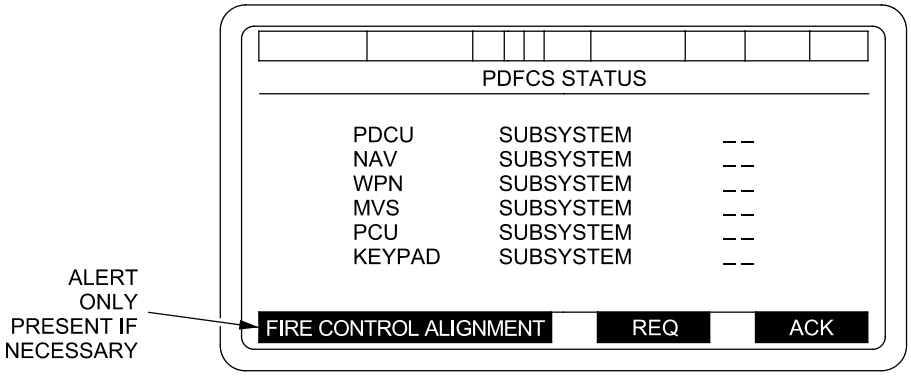


06pc072md

When the message is acknowledged, the PDFCS will proceed to the “SELECT OPERATIONAL MODE” menu. To view detailed software configuration information for each LRU, MAINTENANCE should be selected, IAW procedure in para M-9.1.

(6) Operational Mode Selection Menu.

This menu allows selection of the primary operating mode for the PDFCS.

The selection structure shows the prompting for Embedded Training selection. Note that the TRAINING selection and the associated prompting will not be available if the Embedded Training Controller fails power-up BIT.

# M-6 PDFCS INITIALIZATION - CONTINUED

## M-6.3 Initialization After an Orderly Shutdown - Continued

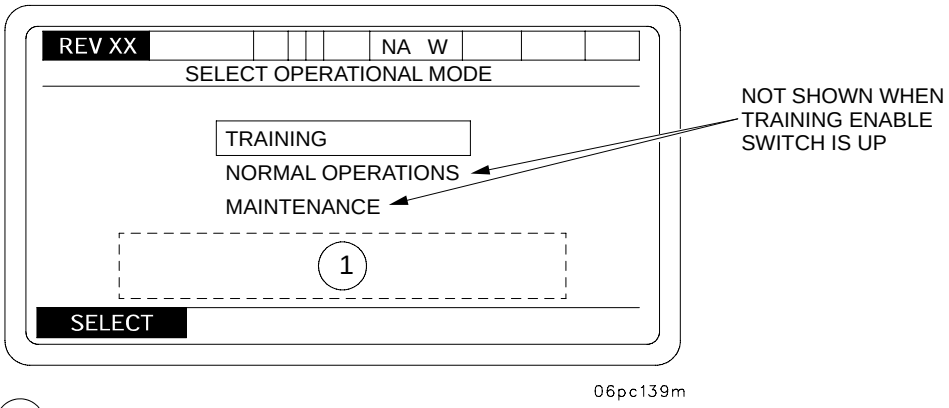


1 - WHEN TRAINING SWITCH IS UP:

**POSITION TRAINING ENABLE SWITCH DOWN**

**TO SELECT OTHER MODES**

- WHEN TRAINING SWITCH IS DOWN:

**POSITION TRAINING ENABLE SWITCH UP**

**TO SELECT TRAINING MODE**

b. Initialization.

**NOTE**

After an orderly shutdown, follow the procedures below. However, if a catastrophic failure happens within the system, go to para M-6.4.

Select NORMAL OPERATIONS on the SELECT OPERATIONAL MODE menu and press SELECT soft key. A NETWORK menu will be displayed.

(1) NETWORK - Check data on the NETWORK menu for correctness against current data from POC/FDC and press FINISHED.

Using the NET ACCESS menu, check that data in the displayed menu shows same data that the unit SOP specifies.

**NOTE**

To ensure efficient set up of the digital net, it is very important that NETWORK data be assigned and controlled by POC/FDC. Verify data per local SOP.

(a) Only one network configuration will be active at any one time. The active configuration is identified by the label "*ACTIVE*" in the "STATUS" column.

(b) Inactive configurations do not have anything displayed in the "STATUS" column.

(c) TACFIRE configurations will not display anything in the "COMSEC" and "MODE" columns of the NETWORK screen.

# M-6 PDFCS INITIALIZATION - CONTINUED

## M-6.3 Initialization After an Orderly Shutdown - Continued

(d) 188-220 communications configurations identify the Device, Baud Rate, COMSEC and mode. 188-220 configurations with any customized values identify the Device as “CUSTOM/R” for Radio and “CUSTOM/W” for Two-Wire.

(e) The PDFCS will not reorder network configurations as a result of deletions.

(f) The “FINISHED” and “VIEW” soft keys are not visible unless at least one configuration is defined.

(g) Soft key sequencing shall be as follows:

- SELECT soft key - if the highlighted configuration was previously defined, control transitions to NETWORK SETTINGS-SELECT CONFIGURATION OPTION display. If the highlighted configuration has not been defined, control transitions to NETWORK SETTINGS-STANDARD COMMUNICATION CONFIGURATION display (see para M-6.2c).
- FINISHED soft key - When the operator presses the “FINISHED” soft key the PDFCS stores all defined network configurations and control transitions to Normal Operational Initialization Display.
- VIEW soft key - When the “VIEW” soft key is pressed and the currently selected network configuration has been defined, control transitions to the NETWORK SETTINGS display (see para M-6.2e). When the “VIEW” soft key is pressed and the currently selected network configuration has not been defined, control does not transition.

(h) PDFCS support 11 predefined communications configurations (see Table M-2).

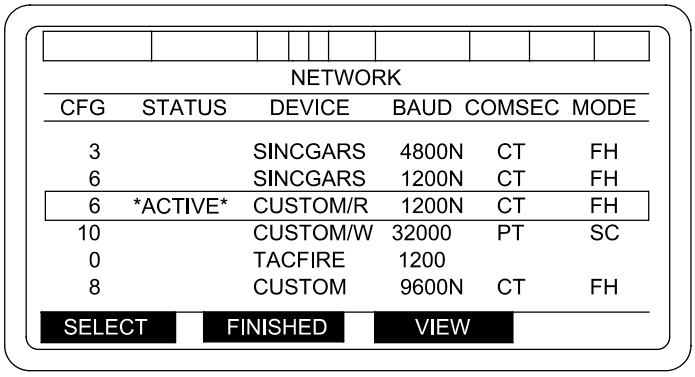


06pc322t

# M-6 PDFCS INITIALIZATION - CONTINUED

## M-6.3 Initialization After an Orderly Shutdown - Continued

(2) SET DATE/TIME - Select SET DATE/TIME on SETUP AND INFORMATION menu and press SELECT to display a SET DATE/TIME GROUP menu.

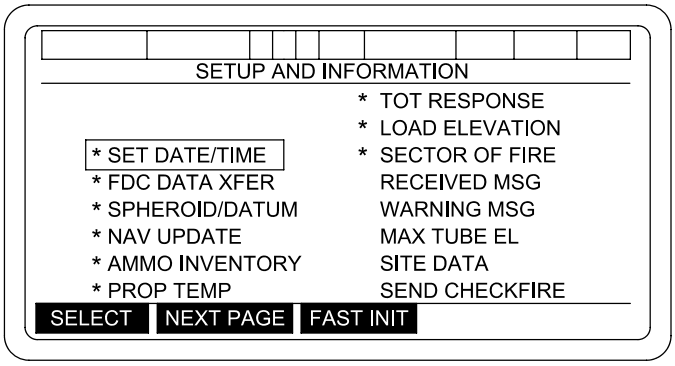


06pc327ta

**NOTE**

Use according to unit SOP.

If GPS data is available select "USE GPS".

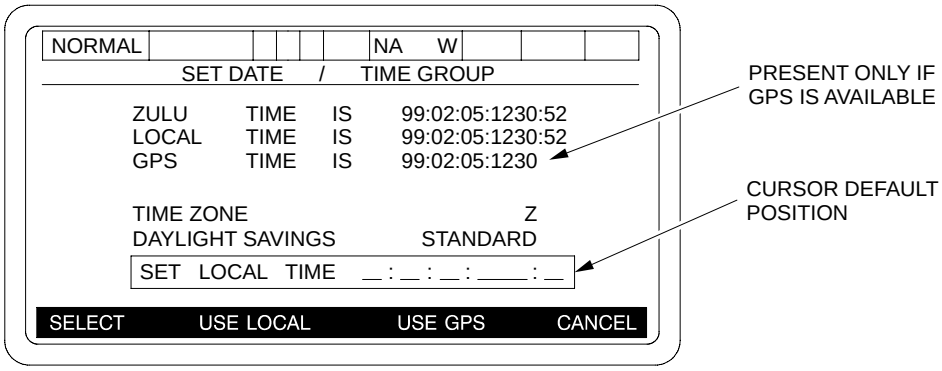


06pc177t

**NOTE**

If GPS is not available or if POC has instructed you not to use GPS time, type in new DTG.

SELECT TIME ZONE - Enter SELECT TIME ZONE in accordance with unit SOP.

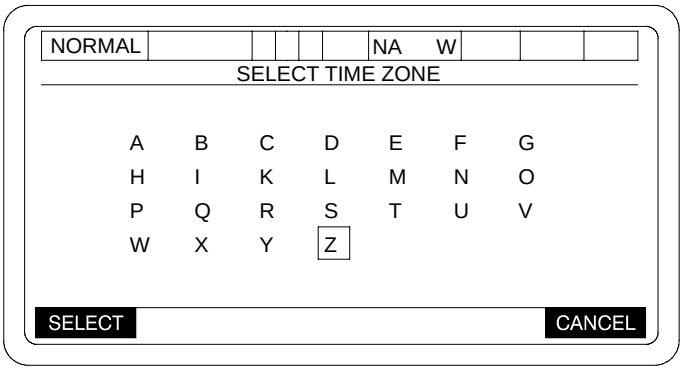


06pc178t

# M-6 PDFCS INITIALIZATION - CONTINUED

## M-6.3 Initialization After an Orderly Shutdown - Continued

SELECT DAYLIGHT SAVINGS - Enter DAYLIGHT SAVINGS TIME in accordance with unit SOP.

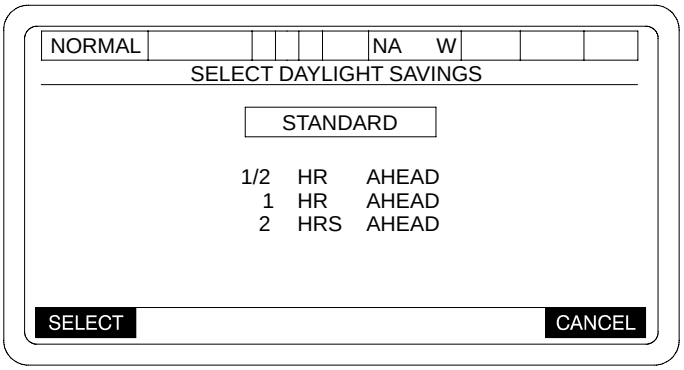


06pc179t

Contact the POC by voice radio to obtain the correct date/time data and a MARK. Type in date/time data (year, month, day, hour, minute) as given by the POC. If the data is entered incorrectly a message will be displayed stating "Invalid DTG Value," and you will have to re-enter the data. When this is done, another SET DATE/TIME GROUP menu will be displayed.

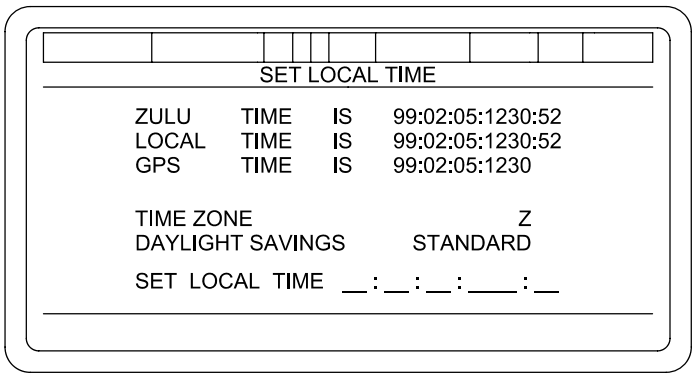


06pc180tb

When the FDC operator gives a countdown and announces MARK, press MARK. The PDFCS and FDC time should now be synchronized. A SETUP AND INFORMATION menu is then displayed on the DU.

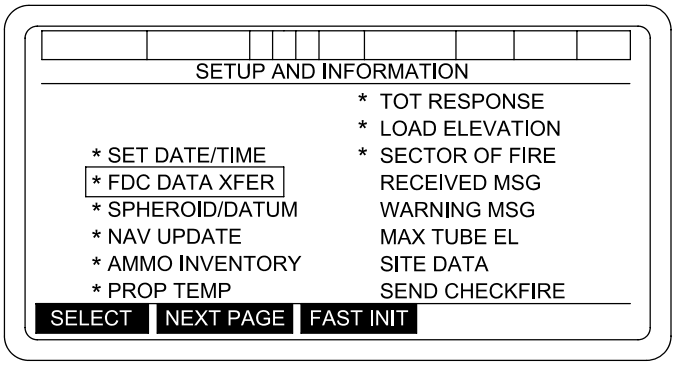


06pc327t

# M-6 PDFCS INITIALIZATION - CONTINUED

## M-6.3 Initialization After an Orderly Shutdown - Continued

**NOTE**

The FDC DATA TRANSFER must be done each time you initialize the PDFCS, if the POC/FDC is operational.

(3) FDC DATA TRANSFER - To obtain current initialization data (current MET, registration data, etc.), select FDC DATA XFER on SETUP AND INFORMATION menu. Press SELECT soft key to display a FDC DATA TRANSFER menu.

The INITIALIZATION menu item will be automatically boxed and the operator will be prompted to press "YES" or "NO". Pressing "YES" will cause a message to be sent to FDC requesting initialization data. If you know that FDC is not operational, pressing "NO" will clear the * from FDC DATA XFER on the SETUP AND INFORMATION menu.

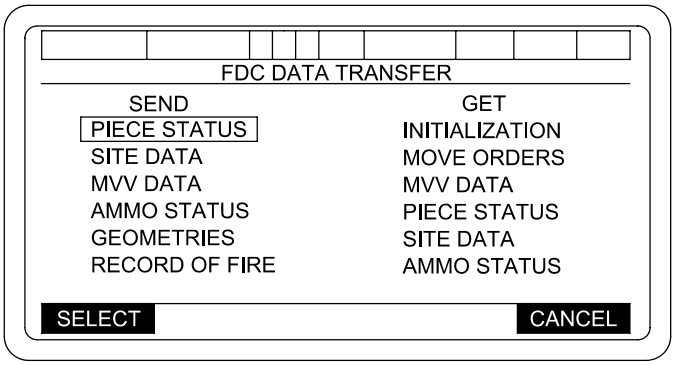


06pc328t

(4) ENTER SPHEROID/DATUM - The FDC DATA XFER, INITIALIZATION data includes a SPHEROID/DATUM, but does not transfer the necessary map DATUM. To input the correct DATUM, box in the "ENTER SPHEROID/DATUM" and press the SELECT key. This brings up the SPHEROID/DATUM entry menu.

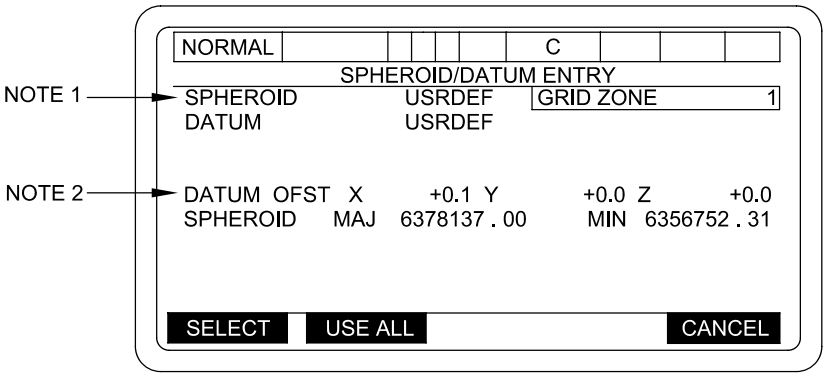


06pc249ta

Check to see if all the data is correct. If it is correct, press the USE ALL key, and proceed with the initialization. If an entry is not correct, select that field and make corrections.

NOTE 1 SELECTION OF THIS FIELD WILL DISPLAY SELECT SPHEROID MENU.

NOTE 2 FIELD IS ONLY PRESENT IF USER DEFINED (USRDEF) DATUM IS USED.

# M-6 PDFCS INITIALIZATION - CONTINUED

## M-6.3 Initialization After an Orderly Shutdown - Continued

When grid zone is selected the following will be displayed:

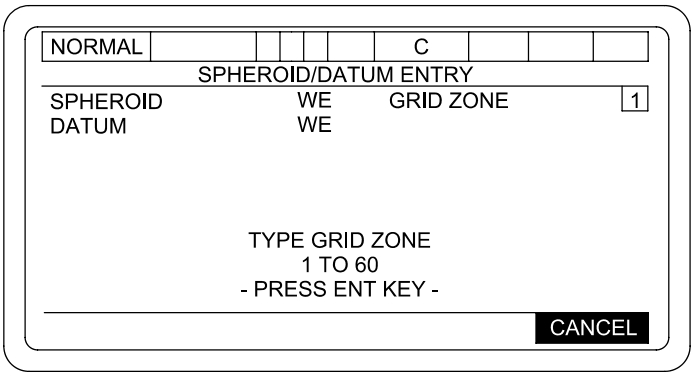


06pc250t

When DATUM is selected, SELECT DATUM menu is displayed:

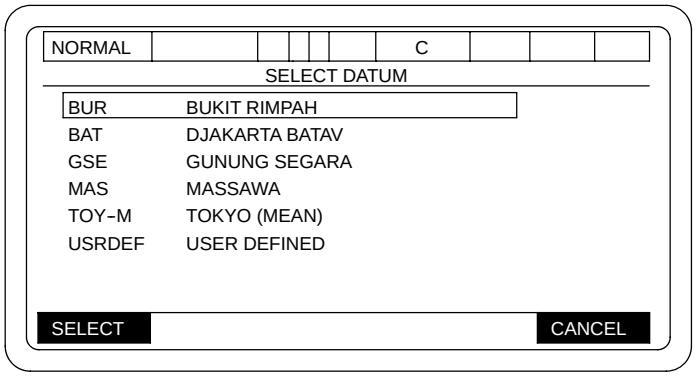


06pc253t

Box in the correct DATUM and press the SELECT key. The DATUMs available are dependent on the SPHEROID selected. See Table (Appendix J.1) PDFCS/FDC DATUM AND SPHEROID for SPHEROID/DATUM combinations.

# M-6 PDFCS INITIALIZATION - CONTINUED

## M-6.3 Initialization After an Orderly Shutdown - Continued

### NOTE

The reference frame for UTM position coordinates is a DATUM. Typically, a Local DATUM is defined by an ellipsoidal earth model (SPHEROID) and a starting point (origin) for the coordinate system. Coordinates on a map or in a Trig list (SCPs) often are on a Local DATUM. An example of a Local DATUM is the North American 1927 (NAD 27) DATUM used in the United States. There have been many different Local DATUMs developed. GPS computes position on the World Geodetic System 1984 (WGS 84), a worldwide coordinate system. To use GPS with coordinates on a Local DATUM, the coordinates must be mathematically shifted. The PDFCS (DRUH and PLGR) can automatically perform DATUM shifting, but first the operator must select the Local DATUM to be used, or provide the appropriate shift parameters. For PDFCS operation, Local DATUMs are represented by two sets of parameters: The Local Ellipsoid (SPHEROID) and shift parameters as defined for each Local DATUM (DATUM IDs). The FDC can provide the SPHEROID. But the FDC can not provide the Local DATUM. Therefore the operator must enter it. The SPHEROID selected will determine which DATUM IDs will be available for selection. The PDFCS/FDC SPHEROID and DATUM TABLE provides the SPHEROID number for the PDFCS and FDC, which DATUM IDs are available for that SPHEROID number and the normal coverage area. Note that there may be more than one DATUM ID associated with a Local DATUM because the shifts vary by locality. For other DATUMs or areas outside the indicated coverage area, User Defined (USDDEF) Datum shifts may be entered manually. The table is not intended as an absolute. A map sheet will identify the DATUM name, Ellipsoid (SPHEROID) name and the coordinate type, or the map sheet will identify the area. The data from a Trig list should identify the same information. These parameters must be correlated to the DATUM ID. If the applicable DATUM ID hasn't been programmed in the PDFCS, shift parameters for many other DATUMs and regions have been published in DMA TR 8350.2 and may be entered thru the DATUM X, Y and Z offsets. Note that the PDFCS can not accept shift parameters for all Datums because its SPHEROID capability is limited to those listed in the PDFCS/FDC Table (Appendix J.1).

# M-6 PDFCS INITIALIZATION - CONTINUED

## M-6.3 Initialization After an Orderly Shutdown - Continued

If the DATUM USR DEF is selected, then the DATUM X, Y, and Z offsets must be entered. These values must be obtained from the POC and should only be used with guidance from Battery Commander. The ENTER USER DATUM PARAMETERS page should look like:

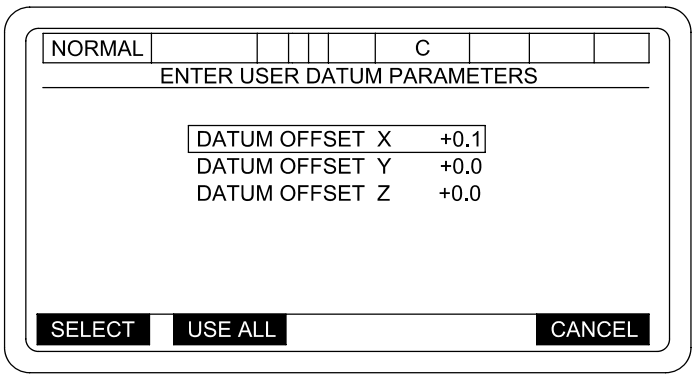


06pc254t

When DATUM OFFSET is selected:

Type -2000.0 TO +2000.0:
Press ENT key.

When DATUM OFFSET Y is selected:

Type -2000.0 TO +2000.0:
Press ENT key.

When DATUM OFFSET Z is selected:

Type -2000.0 TO +2000.0:
Press ENT key.

After all the correct data has been entered, press the USE ALL key to clear and return to the main menu.

(5) NAVIGATION UPDATE - Select NAV UPDATE and press SELECT soft key to display a NAVIGATION SUBSYSTEM UPDATE menu.

**NOTE**

- If vehicle has not been moved since orderly shutdown, the Navigation Subsystem will initiate a Stored Heading Align, which will be completed in about 90 seconds.
- If vehicle has been moved since orderly shutdown, move vehicle to a survey point and enter survey data.

# M-6 PDFCS INITIALIZATION - CONTINUED

## M-6.3 Initialization After an Orderly Shutdown - Continued

Check data for correctness. If correct, press USE ALL soft key. The prompt, NAV POSITION UPDATE TO START, ARE YOU SURE (YES OR NO), will be displayed. Make proper selection. Press the YES key to RESTART the Navigation Subsystem and display the SETUP AND INFORMATION menu.

Press the NO key to redisplay Navigation Subsystem Update menu. Make corrections or press CANCEL to display SET UP AND INFORMATION menu.

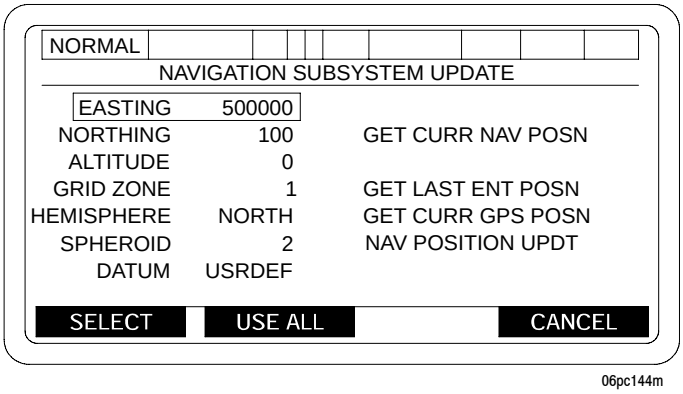


(6) AMMO INVENTORY - Select AMMO INVENTORY on the SETUP AND INFORMATION menu. Press SELECT soft key to display INVENTORY MANAGEMENT menu.

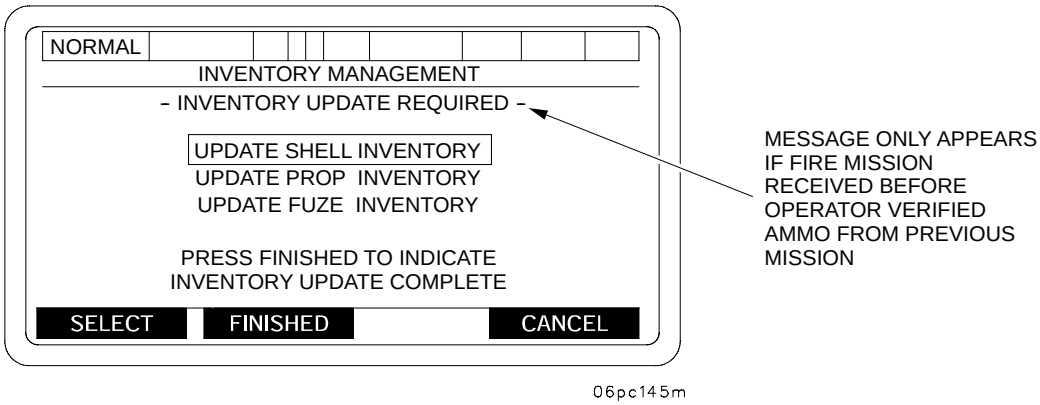


**NOTE**

If a fire mission is activated while in any of the ammunition inventory sub-menus, all valid complete entries shall be saved.

If the ammunition inventory is current, press FINISHED soft key to display the SETUP AND INFORMATION menu. If ammunition inventory is not current, to enter ammunition data, refer to para M-6.2.

# M-6 PDFCS INITIALIZATION - CONTINUED

## M-6.3 Initialization After an Orderly Shutdown - Continued

(7) PROPELLANT TEMPERATURE – Select PROP TEMP on SETUP AND INFORMATION menu. Press SELECT key to display a PROPELLANT TEMPERATURE menu.

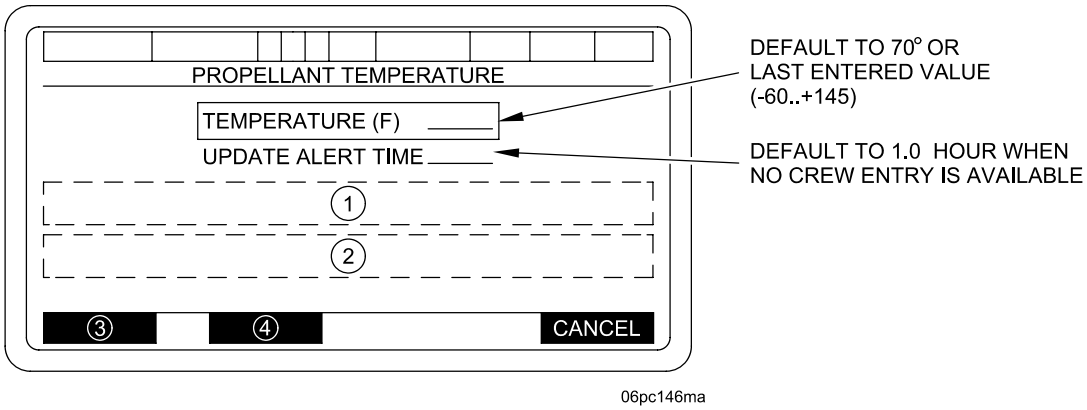


06pc146ma

1 TIME TO GO XX:XX (HOURS:MINUTES) OR TIME EXCEEDED

2 WHEN TEMPERATURE SELECTED
TYPE TEMPERATURE IN FAHRENHEIT
DEGREES –60 TO +145
– PRESS ENT KEY –

WHEN UPDATE ALERT TIME SELECTED
TYPE UPDATE TIME IN 0.5 HOUR
INCREMENTS 0.5 TO 2.0
– PRESS ENT KEY –

3 BLANK – WHEN TEMPERATURE OR UPDATE ALERT TIME SELECTED
SELECT – WHEN ITEM IS NOT SELECTED

4 USE ALL – WHEN NO ITEM IS SELECTED
+/– WHEN TEMPERATURE IS SELECTED
BLANK – WHEN UPDATE ALERT TIME IS SELECTED

# M-6 PDFCS INITIALIZATION - CONTINUED

## M-6.3 Initialization After an Orderly Shutdown - Continued

If displayed temperature and update alert time are correct, press USE ALL key. If another temperature or alert time entry is necessary, box the desired item and press SELECT key. Type in new temperature or alert time and press ENT key. When entries are correct, press USE ALL key. The SETUP AND INFORMATION menu will be displayed.

(8) TOT RESPONSE - To access the TOT RESPONSE menu, press NEXT PAGE key to display next page of SETUP AND INFORMATION menu.

Select TOT RESPONSE and press SELECT to display a TOT RESPONSE menu.

Type in desired time to be used and press ENT key. The SETUP AND INFORMATION menu will be displayed.

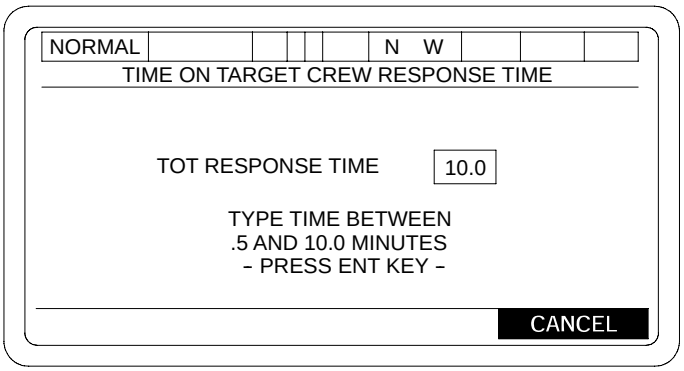


06pc135m

(9) Select LOAD ELEVATION on the SETUP AND INFORMATION menu. Press SELECT key to display a TUBE LOAD ELEVATION menu.

**CAUTION**

Do not enter an elevation greater than 300 mils. Settings above 300 mils may result in breech failing to close and could cause unnecessary wear on spring pack.

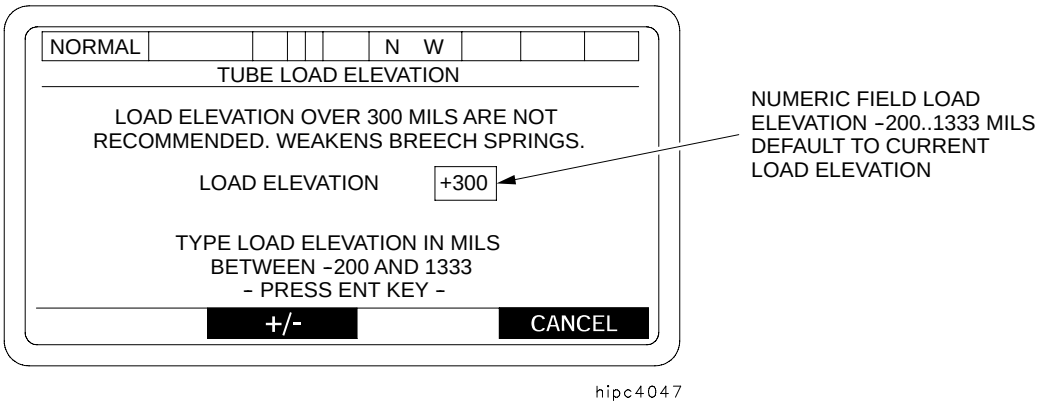


hipc4047

If load elevation shown is the desired elevation, press ENT key. If a new elevation is desired, type in desired elevation and then press ENT key. The SETUP AND INFORMATION menu will be displayed.

# M-6 PDFCS INITIALIZATION - CONTINUED

## M-6.3 Initialization After an Orderly Shutdown - Continued

(10) Select SECTOR OF FIRE on SETUP AND INFORMATION menu. Press SELECT soft key to display a DEFINE SECTOR OF FIRE menu.

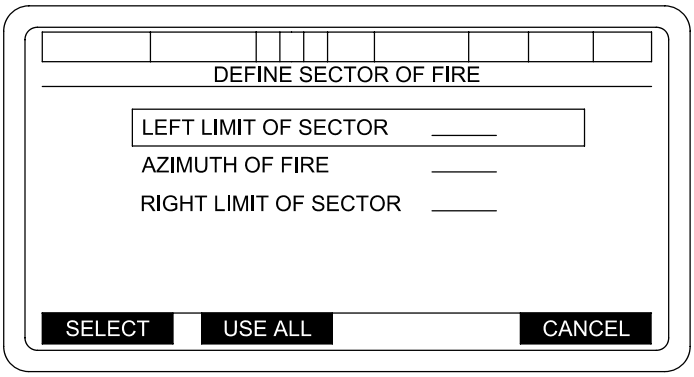


06pc205tb

If data displayed on menu is desired sector of fire, press USE ALL soft key. If a change is needed, select area to be changed, type in change and press ENT key. Repeat for additional changes, when complete press USE ALL soft key. The following message will be displayed: “ARE YOU SURE” “YES” “NO”. If “YES” is selected data will be updated and the display will return to SETUP and INFORMATION menu. If “NO” is selected the message will be removed for re-entry of data. A POS UPDATE or NAV RESTART must be performed if the changes are to be used by the PDFCS.

(11) SECTION IN ORDER - When navigation alignment time has been completed, or message “OK TO MOVE OR SHOOT” “ACK” has been acknowledged, a CANCEL prompt will appear on the SETUP AND INFORMATION menu. Press CANCEL to display the SECTION IN ORDER AT INITIALIZATION POINT screen.

The PDFCS system is now initialized and can perform missions as directed.

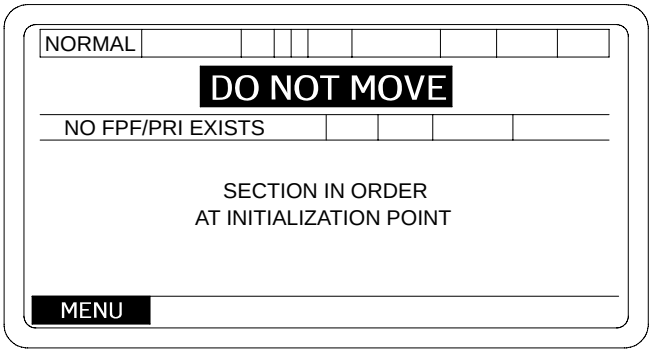


06pc148m

# M-6 PDFCS INITIALIZATION - CONTINUED

## M-6.4 Initialization After a Catastrophic Failure.

a. If a catastrophic failure (e.g., sudden loss of power of PCU-2) occurs, it is possible that no data at all will be saved by the PDFCS. In this case, a step-by-step-system initialization must be done.

**NOTE**

- Position data must be recorded prior to pressing ARRIVED key during emplacement. If time permits the crew should also set out collimator or select a DAP and set 3200 Deflection on the PANTEL on Center of Sector (Base Azimuth).
- To be able to react quickly to re-initialize a failed PDFCS, a Platoon SOP voice request procedure from crew to POC to send all required data messages from FDC may be helpful. Data that would be useful from FDC are: INITIALIZATION (Subscriber File, Map Mode, MET, Registration), MUZZLE VELOCITY, Current Position (to include Sector of Fire) and Propellant Temp (PIECE STATUS), SITE STATUS, and AMMO STATUS.

b. Getting Data. To return to Section in Order as fast as possible after a catastrophic failure of the PDFCS, return the tube to travel lock before shutting PDFCS power off. Wait about 5 seconds, then turn PDFCS power on. Begin the Initialization process as normal, working off the * menu items on the SETUP AND INFORMATION menus. If FDC has current data, get as much data as you can from FDC. This data can be obtained as follows:

(1) Box FDC DATA XFER on the SETUP AND INFORMATION menu and press SELECT key. The INITIALIZATION item under the GET column will be boxed as usual. Press YES to transmit the request for INITIALIZATION data (Subscriber File, Map Mode, MET and Registration).

(2) Next, box MUZZLE VELOCITY under the GET column and press SELECT key. Press YES key to transmit the request to FDC.

**NOTE**

The PDFCS automatically uses the Muzzle Velocity data sent by FDC. No further action is necessary by the crew.

(3) Repeat the last step for PIECE STATUS, SITE STATUS, and AMMO STATUS.

(4) Once all requests have been sent, press CANCEL key to move to the next initialization step on the SETUP AND INFORMATION menu.

# M-6 PDFCS INITIALIZATION - CONTINUED

## M-6.4 Initialization After a Catastrophic Failure - Continued

c. Nav Update.

(1) Use your current position data that you recorded upon emplacement.

(2) If POC has a current location where the failure occurred, use that data for navigation initialization. To use position data obtained from FDC in the step above, box NAV UPDATE on the SETUP AND INFORMATION menu, press SELECT key and a NAV SUBSYSTEM UPDATE menu will be displayed. Box GET FDC PRPT POSN and press SELECT key. Press USE ALL key, and PDFCS will use the FDC reported position data and return to the SETUP AND INFORMATION menu.

(3) Another howitzer with an operational DRUH and PDFCS can pull into failed howitzer's position (left hub to left hub) and provide navigation data to be entered on the keyboard.

**NOTE**

If no FDC-provided Move Order is expected after PDFCS initialization, then the Sectors of Fire must be changed to those provided by the FDC prior to the failure. Sector of Fire entries must be completed prior to inputting a manual Move Order.

(4) The failed howitzer can be taken to a surveyed point and navigation initialized from survey data.

d. Ammo Inventory. To use ammunition inventory data obtained from FDC in the step above, box AMMO INVENTORY on the SETUP AND INFORMATION menu, press SELECT key and INVENTORY MANAGEMENT menu will be displayed. Box EDIT FDC PROVIDED and press SELECT key. When the FINISHED key is pressed the ammunition inventory shall be reviewed to insure each group of projectiles has at least one propellant and each group of propellants has at least one projectile. If a projectile is found without a propellant or a propellant without a projectile, PDFCS will display PROJECTILE/PROPELLANT MISMATCH menu. Pressing the CONTINUE Soft key on this menu will return operator to the INVENTORY MANAGEMENT menu, at which time the operator has to update SHELL/PROP inventory. On the next INVENTORY MANAGEMENT menu, press FINISHED to accept the FDC PROVIDED data. If you want to check the ammo inventory for accuracy, then box and select UPDATE SHELL, UPDATE PROP, and UPDATE FUZE one at a time (para M-6.2k(5)).

e. Site Definition. To use Site data obtained from FDC in the step above, box SITE DATA on the SETUP AND INFORMATION menu, press SELECT key and SITE DEFINITION menu will be displayed. Box GET FDC SITE and press SELECT key (This option will only be available if the POC has sent an AFU mask to the PDFCS). Press USE ALL, and the FDC provided Site Data will be used by the PDFCS.

## M-7 PDFCS TRAVEL MODE.

During the travel mode the navigation system provides a continuous position data display to the operator. The data displayed on the EL Panel will show UTM coordinates for both position and destination. Also included is a graphic display showing where the vehicle is traveling in relation to destination. After alignment, the PDFCS will automatically go into travel mode when the howitzer starts to move.

### M-7.1 Movement.

Once the howitzer has been initialized and the navigation system has had time to align, a CANCEL SOFT KEY will appear on the main menu. To view a SECTION IN ORDER AT INITIALIZATION POINT screen, press the CANCEL SOFT KEY

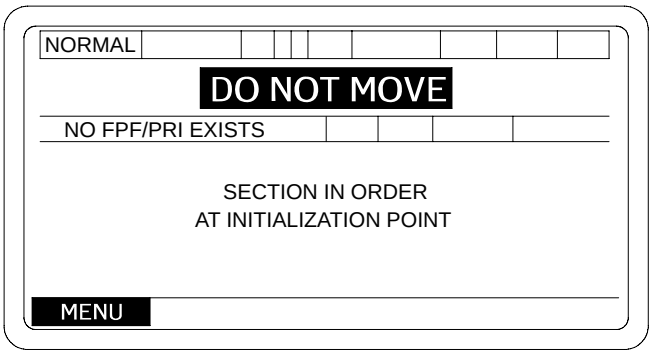


06pc148m

**NOTE**

- DO NOT MOVE the howitzer until you see OK TO MOVE OR SHOOT, ACK message.
- You may then move the howitzer or accept fire missions, but you can expect ZUPT requests during moves if the ALN_ _ _S is still counting down.

M-7.1.1 Move Order.Upon receipt of a Move Order, an audio alert will sound and an OPERATOR ALERT and a STEERTO/EMPLACEMENT screen will automatically appear if the system display was at a SECTION IN ORDER screen. If the SET UP AND INFORMATION screen is displayed a MOVE ORDER alert will appear in field 3 of the screen, and an OPERATOR ALERT, “MOVE MISSION” “ACK”, will be displayed and the CANCEL soft key must be pressed to display the STEERTO/EMPLACEMENT screen. Once the vehicle has moved about 25 meters an audible and soft key alert “PRESS ACK WHEN TUBE STOWED” “ACK” will be displayed. Acknowledge the tube is stowed and press “ACK” soft key.

# M-7 PDFCS TRAVEL MODE - CONTINUED

## M-7.1 Movement - Continued

M-7.1.1 Move Order - Continued

STEERTO display screens:

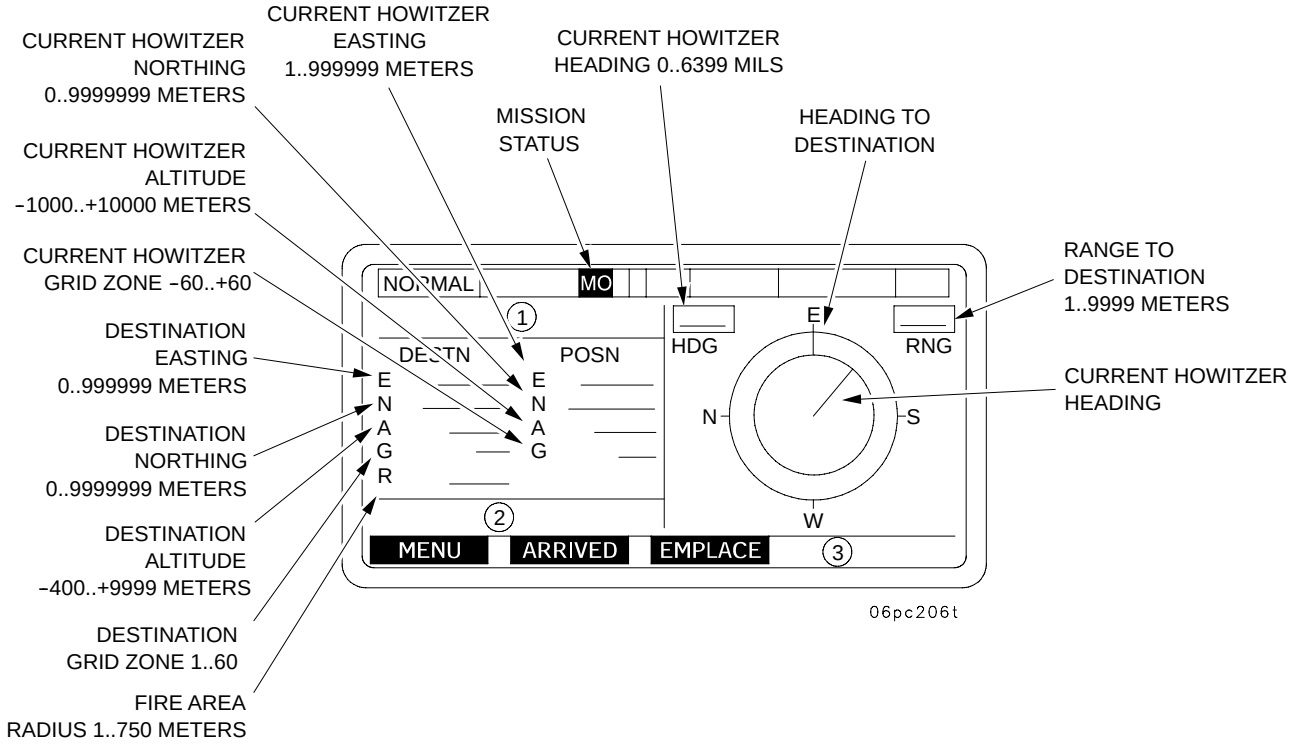


(1) "STEERTO FIRE AREA" - Destination is Fire Area
"STEERTO INIT POINT" - Destination is Initialization point
"STEERTO LOG POINT" - Destination is Logistics Point
"STEERTO FIRE POINT" - Destination is Fire Point

(2) "ORDERED MOVE IN PROGRESS"
"STOP MOVING AND WAIT"
"MOVE IN PROGRESS"
"NO AUTHORITY OR ORDERS TO MOVE"
"AWAITING START OF ORDERED MOVE"
"DO NOT START ORDERED MOVE"

(3) "ZUPT REQUIRED"
"NAV POS UPDATE REQUIRED"

# M-7 PDFCS TRAVEL MODE - CONTINUED

## M-7.1 Movement - Continued

M-7.1.1 Move Order - Continued

The STEER TO FIRE AREA screen contains the following:

a. MO - Describes Move Order status.

b. DESTN - Indicates destination coordinates: (E) Easting, (N) Northing, (A) Altitude, (G) Grid Zone, (R) Radius of operating area,

c. POSN - Indicates present howitzer position: (E) Easting, (N) Northing, (A) Altitude, (G) Grid Zone.

d. HDG - Howitzer's numerical heading in Mils (Azimuth).

e. RNG - Range to destination in radial distance.

f. Graphic Display - N, E, S, W on outer circle, indicates North, East, South and West and rotates like a compass. The line running from the center of display to edge of the inner circle indicates present vehicle heading. The line between the inner and outer circle indicates the desired heading. When these two lines are aligned, the vehicle is traveling toward destination.

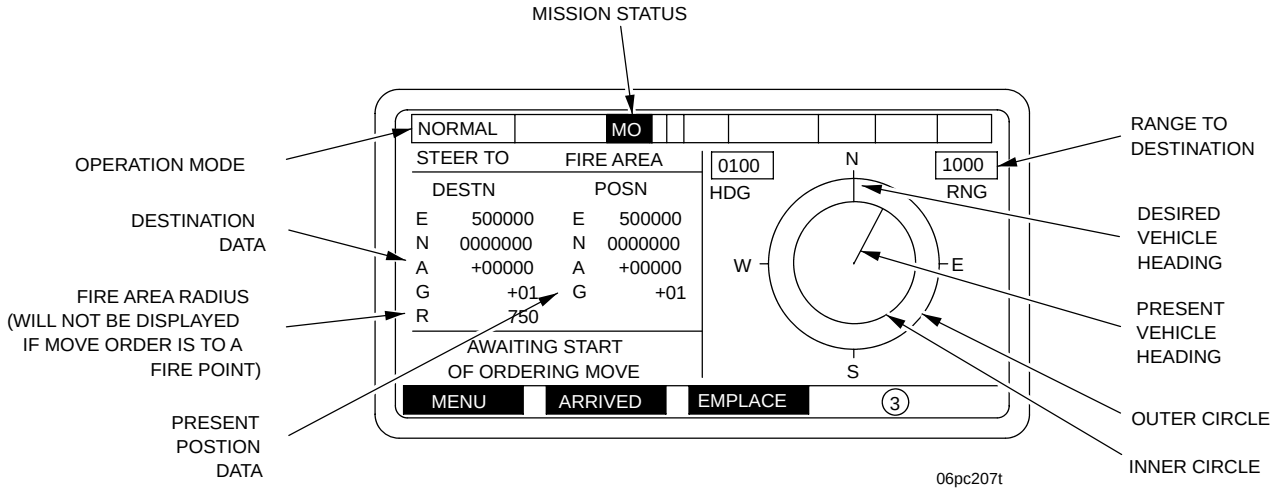

# M-7 PDFCS TRAVEL MODE - CONTINUED

## M-7.1 Movement - Continued

M-7.1.2 Moving. During movement of the howitzer, the STEER TO FIRE AREA screen will assist the operator in locating his destination. While the howitzer is on the move, the following will occur:

a. The graphic portion of the display will indicate the howitzer's movement by the outer circle of the display moving according to the vehicle heading. The line from center of the display to the inner circle will move as the howitzer changes directions.

b. The alphanumeric portion of the display under POSN will provide the operator with his current position constantly. The display above HDG will change as the howitzer changes headings and the display above RNG will change to indicate whether the movement is away from destination (increase) or toward destination (decrease).

c. Navigation system update may occur (zero velocity update) to maintain location accuracy.

M-7.1.3 Zero Velocity Updates. "Periodic Zero Velocity Updates (ZUPT) may be required if the VMS fails or is out, and the GPS is not valid. ZUPTs are required to increase the accuracy of the Navigation Subsystem. To insure proper Navigation Subsystem Operation and to maintain system performance accuracies, ALL Requested ZUPTs must be honored." When an update is required, the PDFCS will notify the operator with an audible alert and "ZPT" will appear in Field 6 and a soft key alert "ZUPT REQUIRED", "ACK". To accomplish a ZUPT, perform the following steps:

a. Stop the vehicle as soon as possible after the alert (the less time traveled between each ZUPT, the better the system accuracy).

b. Press ACK key to acknowledge operator alert.

c. Remain stopped until ZUPT is complete. ZUPT is done automatically during this period.

When the ZUPT is complete, another operator alert will be displayed, "ZUPT NO LONGER REQUIRED", "ACK". "ZPT" is no longer displayed in status line. Press ACK key, then vehicle movement can be continued.

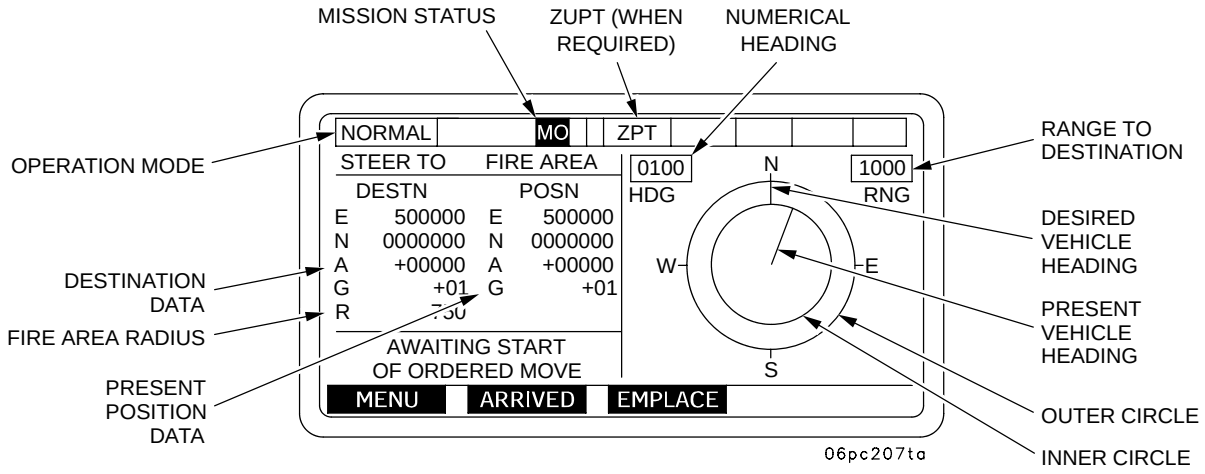

# M-7 PDFCS TRAVEL MODE - CONTINUED

## M-7.1 Movement - Continued

M-7.1.4 Moving with Navigation System Degraded. If a navigation system failure occurs while the howitzer is moving, the operator will be alerted visually with a NAVIGATE ON YOUR OWN TO DESTINATION display. The chief of section must use established navigation procedures to reach the destination shown. If only the PLGR is operational there will be no HDG information on the display.

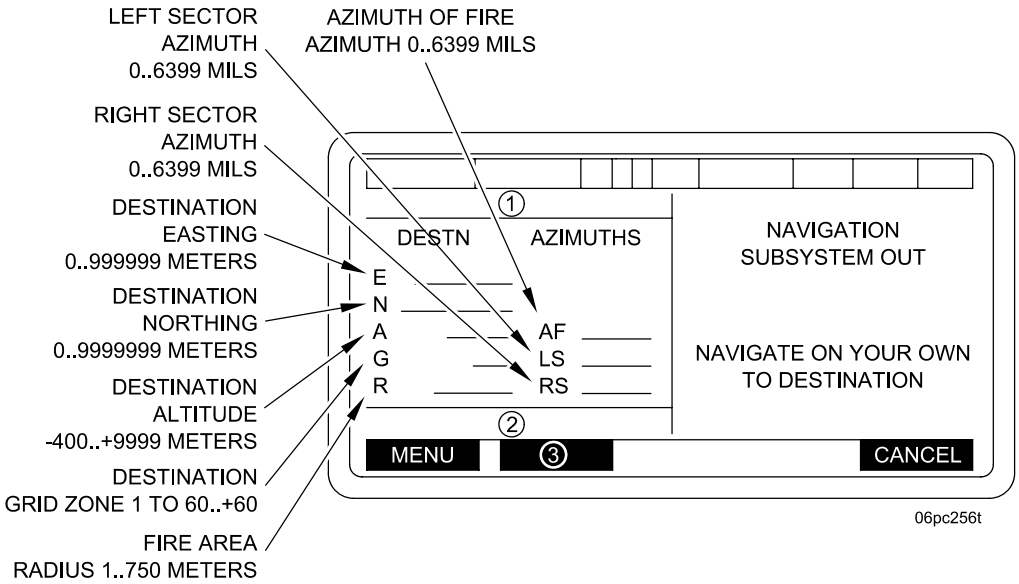


(1) "DEGRADED FIRE AREA" - Destination Is Fire Area

"DEGRADED INIT POINT" - Destination Is Initialization Point

"DEGRADED LOG POINT" - Destination Is Logistics Point

"DEGRADED FIRE POINT" - Destination Is Fire Point

(2) "ORDERED MOVE IN PROGRESS"

"STOP MOVING AND WAIT"

"MOVE IN PROGRESS"

"NO AUTHORITY OR ORDERS TO MOVE"

"AWAITING START OF ORDERED MOVE"

"DO NOT START ORDERED MOVE"

(3) "MOVING" soft key only appears when the Navigation System is DEGRADED. Press "MOVING" soft key after vehicle starts moving. Press "ARRIVED" key when vehicle has arrived at destination.

# M-7 PDFCS TRAVEL MODE - CONTINUED

## M-7.2 Emplacement Fire Point/Fire Area.

When the howitzer enters the radius the PDFCS will display the Emplacement at a FIRING AREA/POINT screen depending on type of MOVE ORDER received.

The EMPLACE FIRE POINT screen is also used for DESTINATION TYPES, INITIALIZATION POINT and LOGISTICS POINT emplacement.

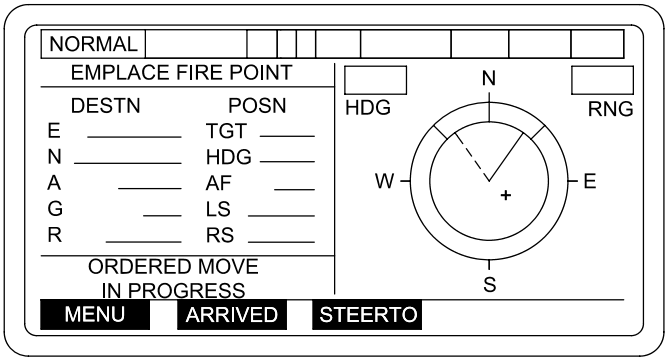


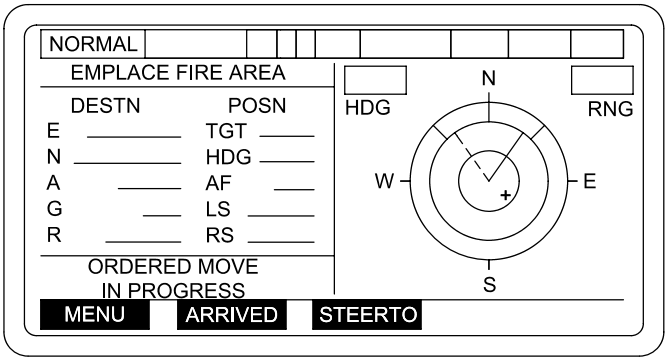


06pc257t

# M-7 PDFCS TRAVEL MODE - CONTINUED

## M-7.2 Emplacement Fire Point/Fire Area - Continued

EMPLACE FIRE AREA Screen - The data on the EMPLACE FIRE AREA screen is the same as the STEER TO FIRE AREA screen with the following exceptions:

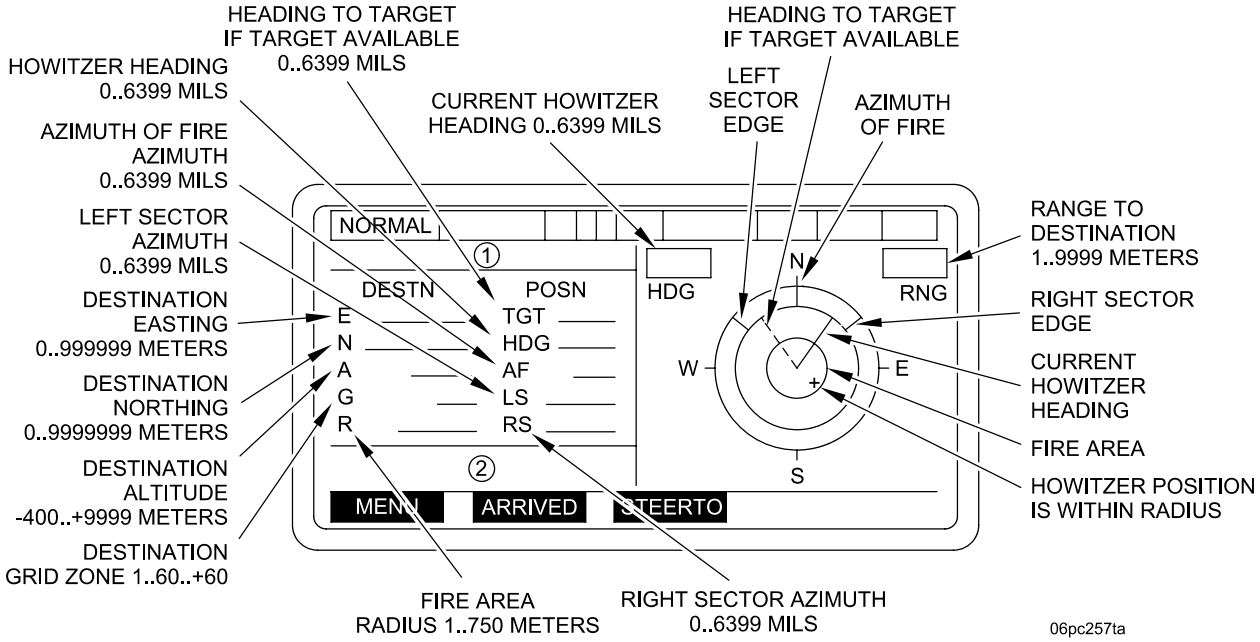


(1) "EMPLACE FIRE AREA" - Destination Is Fire Area

"EMPLACE INIT POINT" - Destination Is Initialization Point

"EMPLACE LOG POINT" - Destination Is Logistics Point

"EMPLACE FIRE POINT" - Destination Is Fire Point

(2) "ORDERED MOVE IN PROGRESS"

"STOP MOVING AND WAIT"

"MOVE IN PROGRESS"

"NO AUTHORITY OR ORDERS TO MOVE"

"AWAITING START OF ORDERED MOVE"

"DO NOT START ORDERED MOVE"

# M-7 PDFCS TRAVEL MODE - CONTINUED

## M-7.2 Emplacement Fire Point/Fire Area - Continued

a. Plus Sign - Represents the vehicle. When the vehicle is within the allowable move area assigned by the Platoon Operation Center (POC), the "+" will appear on the display. As the vehicle moves, the plus sign will also move, indicating direction of travel.

b. Inner Circle - Represents the Allowable Movement Area and will vary in size. This is determined by the radius of the Fire Area and is assigned by POC with a Move Order. This circle is an Emplacement Aid.

**NOTE**

- If EMPLACEMENT screen was accessed prior to arriving at next firing area the EMPLACEMENT screen may not display automatically.
- Once the vehicle is within the inner circle (shown by the + sign) the CHIEF OF SECTION may choose his emplacement position to take advantage of terrain features.

c. The line running from middle circle to outer circle between N and E represents Right Sector of Fire and the line between N and W represents Left Sector of Fire. The line under N represents Azimuth of Fire. The sector of fire is assigned by POC with the Move Order.

d. Solid Line - Represents the current heading. It extends from the center of the smallest circle to the edge of the middle circle. When this line is aligned with the line under the "N," the vehicle is travelling toward the ordered destination.

e. Dotted Line - Represents the gun-target line to a Final Protective Fire (FPF) target (if stored on PDFCS) and is designated by the POC.

f. Destination - Represented by the intersection of the solid line and the dotted line at the center of the smallest circle.

g. Azimuths - Display of azimuths in Mils to TGT (FPF target if one exists), HDG (present howitzer heading), AF (Azimuth of Fire), LS (Left Sector of Fire), RS (Right Sector of Fire).

# M-7 PDFCS TRAVEL MODE - CONTINUED

## M-7.2 Emplacement Fire Point/Fire Area - Continued

M-7.2.1 Emplacing. Once the plus sign is within the designated firing area the howitzer has reached its destination. The howitzer is then maneuvered until vehicle heading (solid line from the center of the smallest circle to the edge of the middle circle) is aligned as closely as possible with the Azimuth of Fire Line (center solid line between the middle and outer circle). When these lines are aligned, the howitzer is roughly laid on the Azimuth of LAY.

**NOTE**

- DRUH position data improves approximately 30 seconds after the howitzer is stopped. The chief of section has the option of awaiting this time and then pressing the ARRIVED soft key to achieve optimum positioning data. However, this option should not be considered during an emergency fire mission (EMERGENCY MISSION).
- Before pressing ARRIVED key you must record your position data and Azimuth of Fire (Base Azimuth) in case the PDFCS fails.
- If cab-side VMS modem is disconnected and position data is not available from the PLGR, the DRUH position data will degrade even though the howitzer is not moving. This data may degrade to the point where the navigation subsystem will be declared out.
- The soft key under ARRIVED on the MOVE ORDER screen must be pressed before the gun tube is unstowed from travel lock. This action establishes the TUBE STOW (travel lock) position. Pressing the STOW key will move the tube back to this azimuth.
- If EMPLACEMENT screen was accessed prior to arriving at next firing area the EMPLACEMENT screen may not display automatically.
- Once the vehicle is within the inner circle (shown by the + sign) the CHIEF OF SECTION may choose his emplacement position to take advantage of terrain features.

# M-7 PDFCS TRAVEL MODE - CONTINUED

## M-7.2 Emplacement Fire Point/Fire Area - Continued

M-7.2.1 Emplacing - Continued

- When emplacing the howitzer, the Azimuth of Fire (Azimuth of LAY) from the Move Order is the azimuth the PDFCS holds as the "Base Azimuth" (the 3200 deflection reference position). This is the azimuth used by the PDFCS to compute ballistic data, and is also sent to the FDC in the PIECE STATUS (HOW: UPDATE) message for ballistic computations at the FDC.

- When emplacing at a FIRING POINT the howitzer range must be 50 meters or less. (Optimum 10 meters or less.)

Press the ARRIVED soft key on the EMPLACE FIRE AREA or Fire Point Site Definition screen to display a SITE DEFINITION screen. Take the tube out of travel lock.

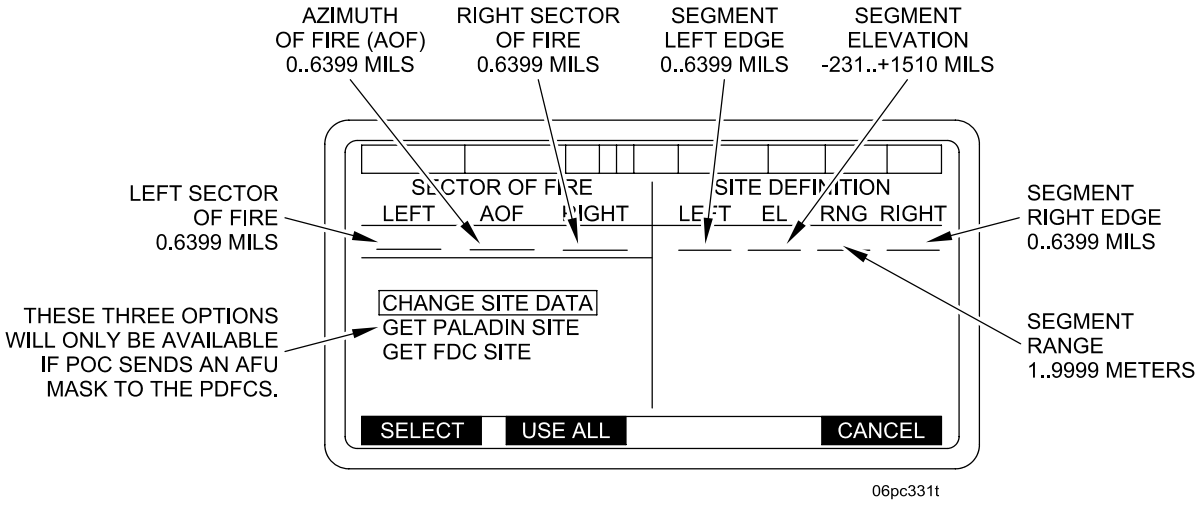


AUTOMATIC SELECTION, "BOXING" will occur starting from field LEFT and then continuing from LEFT to RIGHT, to field EL RNG and RIGHT, after each previous entry has been ENTERED.

# M-7 PDFCS TRAVEL MODE - CONTINUED

## M-7.2 Emplacement Fire Point/Fire Area - Continued

M-7.2.2 SITE DATA. Identifies left and right limits, range and elevation in mils, and is used to ensure that all rounds clear crests within the howitzer's SECTOR OF FIRE. Up to eight sets of site definition data can be entered. Site definition data is determined using the same procedures as SITE TO CREST (sighting through the cannon tube). This data is entered using the SITE DEFINITION screen as follows:

a. Obtain SECTOR OF FIRE data from POC. Normally Azimuth of Fire, Left and Right Sector limits will be provided by the POC in the Move Order and will be displayed automatically on the SITE DEFINITION menu on the left side of the screen under LEFT AOF RIGHT headings.

b. Press the DELETE key to remove SITE DATA from previous occupation. Box in limit under column to be changed and press the SELECT key.

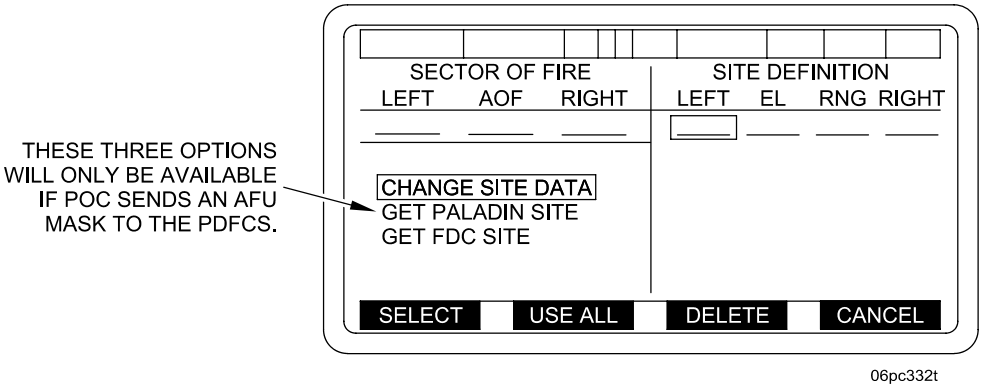


c. One Line SITE DATA (For Initial Occupation). Pressing the ARRIVED key, the COS must obtain One Line SITE DATA. After removing the gun tube from the travel lock, the COS brings the cursor box to the left limit and presses SELECT, then traverses the gun tube to the left while monitoring the Azimuth readout until he reaches at least one mil beyond the Left limit, then presses ENTER. While the GUNNER sights through the gun tube, the COS elevates or depresses the gun tube to obtain immediate crest. COS brings the cursor box to the Right limit and presses SELECT, then COS traverses the gun tube to the Right limit while the GUNNER sights through the gun tube. COS elevates gun tube upon the COMMAND "Elevate" from the GUNNER when the GUNNER needs to clear an obstruction until the COS reaches the Right limit while monitoring the Azimuth readout, then presses ENTER. Before moving the gun tube, COS then cursors to the entry under EL, presses SELECT and ENT to obtain elevation to immediate Crest. COS then cursors to entry under Range, presses SELECT and ENT and inputs RANGE TO CREST from the numeric PDFCS keypad and presses ENT. Upon completion of One Line SITE DATA the COS then presses USE ALL to input MIN QE.

# M-7 PDFCS TRAVEL MODE - CONTINUED

## M-7.2 Emplacement Fire Point/Fire Area - Continued

M-7.2.2 Site Data - Continued

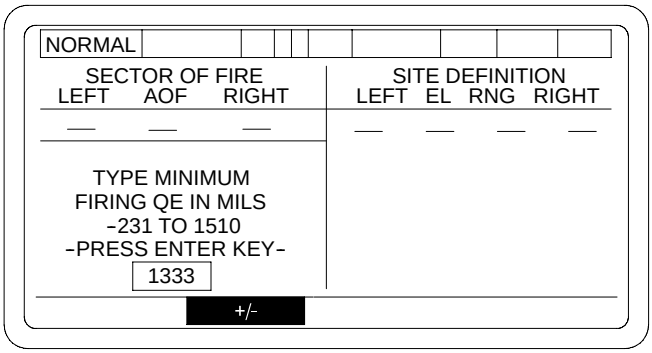


06pc215t

Pressing the ENTER key will display SECTION IN ORDER menu. During NORMAL OPERATIONS the last value entered shall be displayed.

d. MINIMUM QUADRANT ENTRY. Upon completion of One Line SITE DATA, press USE ALL and a display will appear in the left side of the SITE DEFINITION screen. Enter the MIN QE obtained from the POC for the current position. Upon voice verification of the MIN QE with the POC, press the ENT key. This will display the SECTION IN ORDER at FIRING AREA/POINT screen.

e. Send piece status to POC.

**NOTE**

COS will obtain MAX QE and send updated piece status to POC (see para M-8.7.3).

M-7.2.2.1 SITE DEFINITION screen display. With the GUNNER sighting through the tube, the COS elevates or depresses the gun tube to obtain immediate Crest. COS traverses right while the GUNNER looks through the gun tube. When an obstruction appears, data for the Left limit SITE DEFINITION can be entered by pressing the ENT key. The SITE DEFINITION screen with Left Azimuth will be displayed. Perform steps d and e to establish 6400 mils SITE DEFINITION.

**NOTE**

This procedure is conducted as part of Position Improvement.

# M-7 PDFCS TRAVEL MODE - CONTINUED

## M-7.2 Emplacement Fire Point/Fire Area - Continued

M-7.2.2 Site Data - Continued

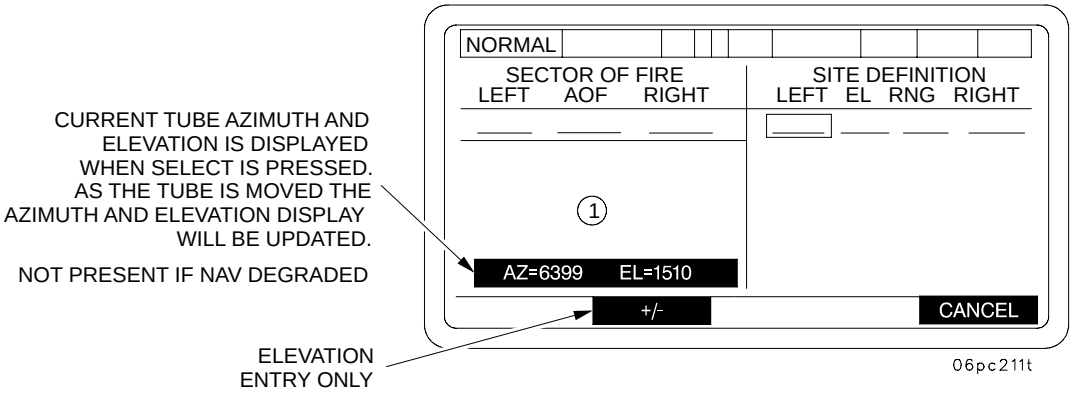


(1) THE FOLLOWING PROMPTS ARE DISPLAYED DEPENDING ON WHICH FIELD IS SELECTED:

| | |
|---|---|
| **WHEN "LEFT" IS SELECTED**<br>MOVE TUBE OR TYPE<br>LEFT EDGE OF SITE<br>IN MILS:<br>0 TO 6399<br>-PRESS ENT KEY- | **WHEN "EL" IS SELECTED**<br>MOVE TUBE OR TYPE<br>ELEVATION OF SITE<br>IN MILS:<br>-231 TO 1510<br>-PRESS ENT KEY- |
| **WHEN "RNG" IS SELECTED**<br>TYPE RANGE TO SITE<br>IN METERS:<br>1 TO 9999<br>-PRESS ENT KEY- | **WHEN "RIGHT" IS SELECTED**<br>MOVE TUBE OR TYPE<br>RIGHT EDGE OF SITE<br>IN MILS:<br>0 TO 6399<br>-PRESS ENT KEY- |

**NOTE: MASK HEIGHT CANNOT EXCEED 10,000 METERS, THEREFORE:**

(A) UPPER LIMIT ON RANGE WILL CHANGE DEPENDING ON CURRENT MASK ELEVATION

(B) UPPER LIMIT ON ELEVATION WILL CHANGE DEPENDING ON CURRENT MASK RANGE

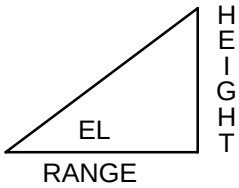


**NOTE: WHEN CURRENT TUBE POSITION IS USED TO SET MASK ELEVATION:**
IF THE RANGE FIELD CONTAINS AN ENTRY WHICH RESULTS IN A MASK EXCEEDING 10,000 METERS, THE RANGE FIELD WILL BE RESET TO THE MAXIMUM ALLOWED VALUE AND THE FOLLOWING MESSAGE WILL BE DISPLAYED: **"WARNING - RANGE SET TO MAXIMUM", "ACK"**

AUTOMATIC SELECTION, "BOXING" will occur starting from field LEFT and then continuing from LEFT to RIGHT, to field EL, RNG, and RIGHT, after each previous entry has been ENTERED.

# M-7 PDFCS TRAVEL MODE - CONTINUED

## M-7.2 Emplacement Fire Point/Fire Area - Continued

M-7.2.2 Site Data - Continued

a. Select column (LEFT) to display left limit SITE DEFINITION screen. Data for this limit can be typed in, or use tube position. Enter data by pressing ENT key.

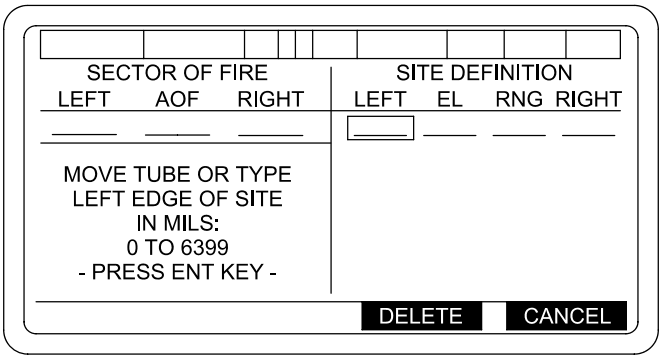


06pc329t

**NOTE**

Numerical value must be entered before sign. Default sign is (+).

Upper limit on elevation will change depending on current mask range. If range is blank, default shall be 1510.

b. Select next limit column (EL) to display Elevation SITE DEFINITION screen. Enter elevation data in the same manner as left limit (type in data or use gun tube position). If elevation is below zero, press +/- key to place minus sign in front of numbers to be entered (used only when typing in data). Press ENT key.

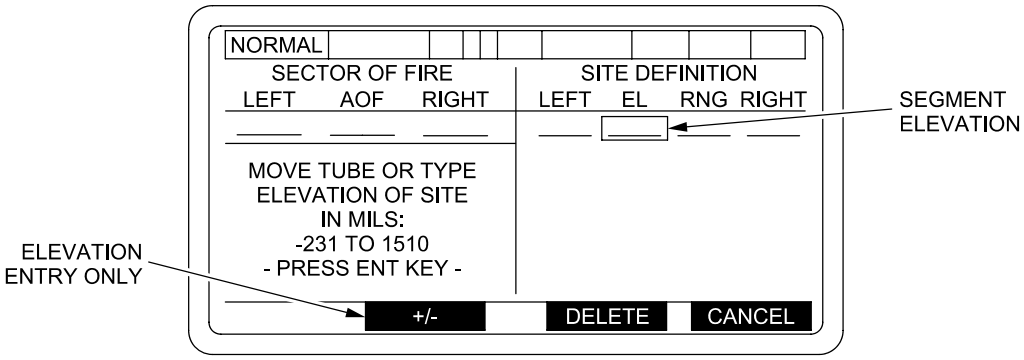


06pc330t

# M-7 PDFCS TRAVEL MODE - CONTINUED

## M-7.2 Emplacement Fire Point/Fire Area - Continued

M-7.2.2 Site Data - Continued

**NOTE**

Upper limit on range will change depending on current mask elevation. If elevation is blank, default shall be 9999.

c. Select next limit column (RNG) to display the Range SITE DEFINITION screen. Enter range to crest and press ENT key. (Data for this must be typed in; gun tube position cannot be used.)

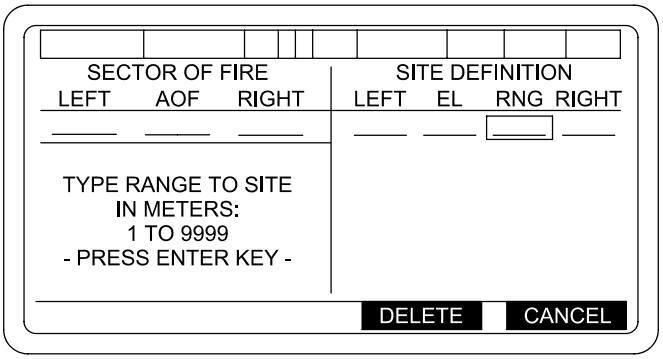


06pc334t

d. Select next limit column (RIGHT) to display the right limit SITE DEFINITION screen. Data for this limit can be typed in, or use tube position. Enter data by pressing ENT key.

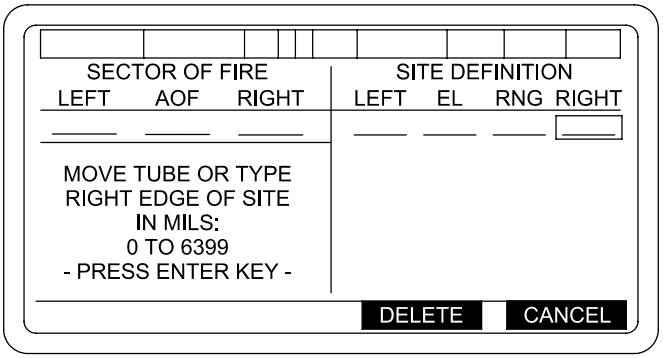


06pc335t

e. Using arrow key, move cursor box to next available line and to the left and identify next obstruction.

f. Sequence can be repeated as many as seven times if needed.

M-7.2.3 Section In Order. When all data is correct, press ENTER key. This will bring up a SECTION IN ORDER WITHIN FIRE AREA or SECTION IN ORDER AT FIRE POINT screen depending on whether the Move Order was a move to a FIRE AREA or FIRE POINT. An ordered move of any other type would be indicated as such in field 11 of the menu.

# M-7 PDFCS TRAVEL MODE - CONTINUED

## M-7.2 Emplacement Fire Point/Fire Area - Continued

M-7.2.3 Section In Order - Continued

### NOTE

- When SECTION IN ORDER screen is displayed, the commanded deflection (CMD DEFL) may be either: 1) the Azimuth of Fire (Azimuth of LAY) from the Move Order, expressed at 3200 deflection. Since this is also the "Base Azimuth" position (the difference between the 3200 reference and the ordered Azimuth of LAY); or 2) if a Final Protective Fire (FPF) or Priority (PRI) target has been designated by the POC, the CMD DEFL will be the deflection from "Base Azimuth" to the FPF; or 3) when a Manual Move Order has been done, the CMD DEFL is the default Azimuth of Fire (Base Azimuth) entered upon initialization.
- LOAD/LAY and STOW will not be displayed unless the gun switch is in the ON position.

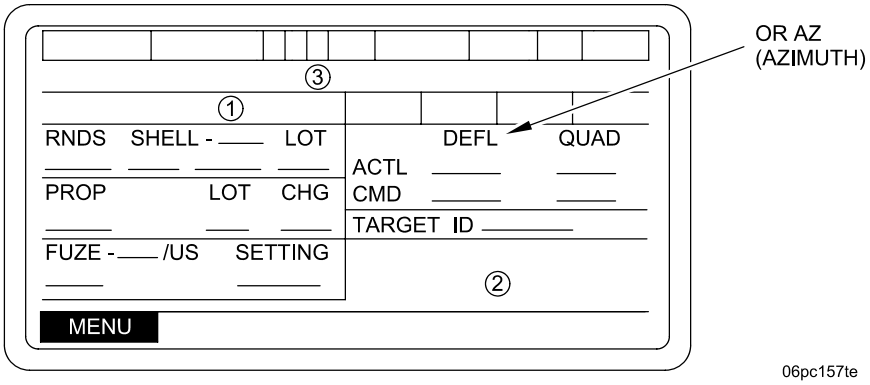


Listed below are the legal values for each field of the SECTION IN ORDER display:

RNDS = Number of rounds remaining to fire 0..99 or blank
SHELL = Shell model and mnemonic or blank
SHELL LOT = A..Z or blank
PROP = Propellant model
PROP LOT = A..Z or blank
PROP CHG = Propellant charge designator (see Table M-1) or blank
FUZE = Fuze model and mnemonic
FUZE SETTING = Computed fuze setting, "PD" or "DELAY"
DEFL (or AZ) = 0.0..6399.9 mils
QUAD = -200.0..+1600.0 mils
TARGET ID = FPF/PRI target identification if a target exists; otherwise blank

# M-7 PDFCS TRAVEL MODE - CONTINUED

## M-7.2 Emplacement Fire Point/Fire Area - Continued

M-7.2.3 Section In Order - Continued

Instructions and warnings which could appear on the SECTION IN ORDER display:

1. Blank
   COMPUTING FPF/PRI
   NO FPF/PRI EXISTS
   UNABLE TO COMPUTE
   SECTOR VIOLATION
   MASK VIOLATION
   INSUFFICIENT AMMO
   NO FUZE INVENTORY
   NO PROJ INVENTORY
   NO PROP INVENTORY
   BAD PROJ LOT/MODEL
   NO AMMO INV COMBO
   INVALID AMMO COMBO
   INSUFFICIENT RANGE
   NO SOLUTION
   NOT FFE TYPE MISSION
   UNASSIGNED FPF/PRI
   TARGET TOO CLOSE
   TUBE EL VIOLATION
2. SECTION IN ORDER AT FIRE POINT
   SECTION IN ORDER WITHIN FIRE AREA
   SECTION IN ORDER IN ROUTE POINT (Only displayed when the destination is not reached for a Fire Point or a Fire Area)
3. DO NOT MOVE/DO NOT LOAD
   DO NOT MOVE
   MOVES ALLOWED
   MOVES ALLOWED DO NOT LOAD

M-7.2.4 Establish Distant Aiming Point or Set Collimator (Optional).

**NOTE**

If time permits, the crew should set out collimator or select a DAP and set the PANTEL with the tube "Base Azimuth". If this is not possible immediately, traverse back to "Base Azimuth" using one of the following procedures based on the conditions indicated on the SECTION IN ORDER screen.

# M-7 PDFCS TRAVEL MODE - CONTINUED

## M-7.2 Emplacement Fire Point/Fire Area - Continued

M-7.2.4 Establish Distant Aiming Point or Set Collimator (Optional) - Continued

a. Use this procedure when the CMD DEFL reads 3200 deflection and there is no FPF nor PRIORITY (PRI) target displayed on the SECTION IN ORDER screen. Under these conditions, CMD DEFL is using the Azimuth of Fire (Base Azimuth). To move the tube to Base Azimuth, 1) Turn on hydraulic power, 2) Set GUN SERVO switch to ON, and 3) Press/hold the LOAD key until the LOAD indicator is highlighted in the upper right corner of the screen. Tube is now laid on Azimuth of Fire (Base Azimuth) and both the ACTL DEFL and CMD DEFL should read 3200. 4) Sight onto the Collimator or the DAP and set 3200 Deflection on the PANTEL.

b. Use this procedure when the CMD DEFL shows a deflection other than 3200 and there is either an FPF or PRIORITY (PRI) target displayed on the SECTION IN ORDER screen. The CMD DEFL is the Firing Azimuth for the FPF/PRI target, so the LOAD key cannot be used to move the tube to 3200 deflection. Under these conditions, 1) use the Hydraulic Power Handle Controls to traverse the tube until the ACTL DEFL reads 3200 deflection. Tube is now laid on Center of Sector (Base Azimuth). 2) Sight onto the Collimator or the DAP and set 3200 Deflection on the PANTEL.

**NOTE**

If the PDFCS fails, use the Azimuth of Fire recorded during emplacement as Azimuth of LAY (Base Azimuth) and use reciprocal lay procedures with the aid of an operational howitzer.

M-7.2.5 Final Laying of Gun Tube at FIRING AREA. It is necessary to lay the gun tube on the Azimuth of Fire (from MOVE ORDER) or the FPF/PRI azimuth/deflection. The SECTION IN ORDER screen will show a difference between the ACTL DEFL and the CMD DEFL. The ACTL and CMD values must be the same for the gun tube to be layed. To accomplish this: 1) set GUN SERVO switch to ON, and 2) depress and hold LOAD key (para M-4). The gun will traverse to the CMD DEFL (match ACTL and CMD) and to the LOAD ELEVATION stored at initialization. When the LOAD indicator is highlighted, release the LOAD key.

## M-8 PDFCS FIRE MISSION.

Fire missions are usually generated as a result of a message from the FDC to the PDFCS. Included in the message are target location, method of control, and ammunition to fire (if ammunition is not specified the PDFCS will default to its own selection). When the message is received by the PDFCS, a FIRE MISSION display is displayed on the PDU and an audible alert is sounded through the intercom system. The Ballistics Computer will then compute the ballistics (azimuth and quadrant), based on ammunition data (projectile, propellant, and fuze), target location and the location of the howitzer (provided by the navigation system). The ballistic solution is then displayed on the FIRE MISSION display.

A typical FIRE MISSION display contains the following:

**WARNING**

**The crew compartment must be adequately ventilated during all firing using the LEAD FILTER or ventilation system in accordance with para 2-22.2.**

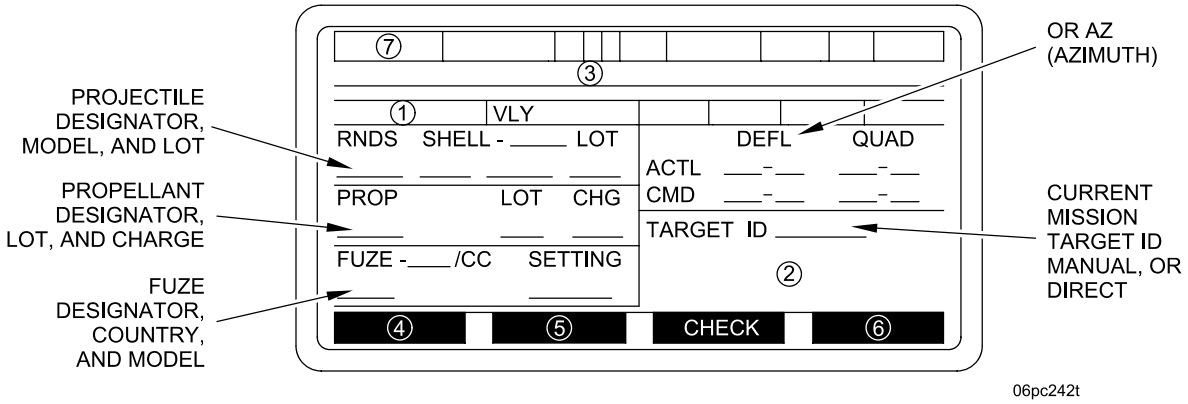


Listed below are the legal values for each field of FIRE MISSION display.

VLY / = Current volley being displayed; 1/1, 1/2 or 2/2

**NOTE**

The 1/1, 1/2, and 2/2 data shall not be displayed for operator initiated fire missions and missions that are in fire commands format.

RNDS = Number of rounds remaining to fire 1..9
SHELL = Shell model and mnemonic
SHELL LOT = A..Z
PROP = Propellant model
PROP LOT = A..Z
CHG = Propellant charge designator (see Table M-1)
FUZE = Fuze model, Country and mnemonic
SETTING = Computed fuze setting, “PD” or “DELAY”
DEFL (or AZ) = 0.0..6399.9 mils
QUAD = -200.00..+1600.0 mils
TARGET ID = Current mission target identification

## M-8 PDFCS FIRE MISSION - CONTINUED

Instructions and warnings which could appear on the FIRE MISSION display:

1 Blank = Fire mission is not a sheaf
SHEAF PT = This gun is participating in a multi-gun sheaf
SHEAF a/s = This run is conducting a single gun sheaf where: a. Current aimpoint number; b. Number of sheaf points

2 Blank - Displayed when none of the following apply
SAFE FIRE AREA VIOLATION = The aimpoint or trajectory termination is outside of the received Safe Fire Area.*
REMEMBER TO UPDATE INVENTORY = Direct or manual fire mission and none of the following apply.
WARNING TUBE IS NOT IN LAY POSITION = WC is operational and the tube is not in the lay window.
TUBE MUST BE LAID MANUALLY = WC is not operational.
CALL FDC IF ROUND IN TUBE = Awaiting tube clear and crew not authorized to fire.
PRESS SHOT OR CLEAR TO ACK CEASELOAD = PDFCS has received a ceaseload request. Min QE violated ACK.
SECTOR OF FIRE VIOLATION = Gun-target line is outside the defined sector of fire.*
SITE VIOLATION = Firing parameters violate defined mask.*
INSUFFICIENT AMMO SHELL/FUZE/PROP = Insufficient inventory quantities.*
INSUFFICIENT AMMO SHELL/FUZE = Insufficient inventory quantities.*
INSUFFICIENT AMMO SHELL/PROP = Insufficient inventory quantities.*
INSUFFICIENT AMMO FUZE/PROP = Insufficient inventory quantities.*
INSUFFICIENT AMMO SHELL = Insufficient inventory quantities.*
INSUFFICIENT AMMO FUZE = Insufficient inventory quantities.*
INSUFFICIENT AMMO PROP = Insufficient inventory quantities.*
MAX TUBE EL EXCEEDED = Computed QE exceeds the defined maximum tube elevation.*
MINIMUM QE VIOLATED = The Gun Tube has violated the minimum QE as entered by the PDFCS operator in the Enter Minimum Firing QE Display.*

3 FIRE WHEN READY = Fire at will
UNDER VOICE ORDERS = Manual fire mission
COMPUTING DO NOT LOAD = PDFCS computing or waiting for operator response
DO NOT LOAD = Do not load missions
LOAD LAY THEN PRESS READY = At my command or Copperhead mission
WAIT FOR COMMAND = At my command after ready
WAIT NNN SECONDS = Time to fire mission or continuous interval mission. NNN maximum number is 999. If greater than 999 seconds = WAIT *** SECONDS
WAIT NNN SECONDS - FDC COMP = WAIT NNN SECONDS = Time to fire mission or continuous interval mission. NNN maximum number is 999. If greater than 999 seconds = WAIT *** SECONDS
FIRE = COMMAND TO FIRE
FPF END OF MISSION = EOM or ceaseload during FPF
EARLY END OF MISSION = EOM received after load but before all rounds fired
CEASELOAD = Ceaseload received after load but before all rounds fired

## M-8 PDFCS FIRE MISSION - CONTINUED

4 Blank indicates that none of the following apply:
SHOT = AFCS requires notification of round fired
READY = AFCS requires notification of operator ready to fire

5 Blank indicates that one of the following apply.
CLEAR = PDFCS requires notification of tube clear
OTHER VLY = Other volley information is available for operator viewing

6 Blank indicates that one of the following apply.
ABORT = Fire mission other than direct or manual active
EOM = Direct or manual mission active

7 “MV” = A valid “MV” was received from the MVS.
“BAD MV” = An MV message was received from the MVS, but the data was not valid.
“NO MV” = No MV message was received from the MVS.

**NOTE**

Alerts listed in item 2 above with asterisks will result in an “OK TO SHOOT?”, “YES”, “NO” short error message to the PDFCS operator.

The following alerts shall appear if the operator presses the LOAD or LAY keys and the tube transitions across the minimum quadrant elevation:

MINIMUM QE VIOLATED ACK

The Gun Tube has violated the minimum QE as entered by the PDFCS operator in the Enter Minimum Firing QE Display. An audio alert shall sound until the ACK key is pressed.

MINIMUM QE NO LONGER VIOLATED ACK

The Gun Tube no longer violates the minimum QE as entered by the PDFCS operator in the Enter Minimum Firing QE Display. An audio alert shall sound until the ACK key is pressed.

Fire Mission Received. When displayed, press ACK to confirm receipt of fire mission.

# M-8 PDFCS FIRE MISSION - CONTINUED

## M-8.1 Platoon Operation Center.

Although the howitzer has the ability to compute its own firing data, the actual firing of a mission is controlled by the POC. The control method is included within the fire mission message and displayed on the FIRE MISSION screen. Control methods are as follows:

a. AT MY COMMAND. In this method, the POC controls when the howitzer is fired. (An example is a normal Copperhead mission.) The Method of Control field of the FIRE MISSION screen will tell the COS to LOAD, LAY, then press READY key. When these are accomplished, a message that the howitzer is ready to fire is sent to the POC. When the FIRE COMMAND is issued by the POC, an audible alert and an alternating tone is sounded and a FIRE prompt is displayed. If more than one volley is to be fired, the other volleys will be FIRE WHEN READY.

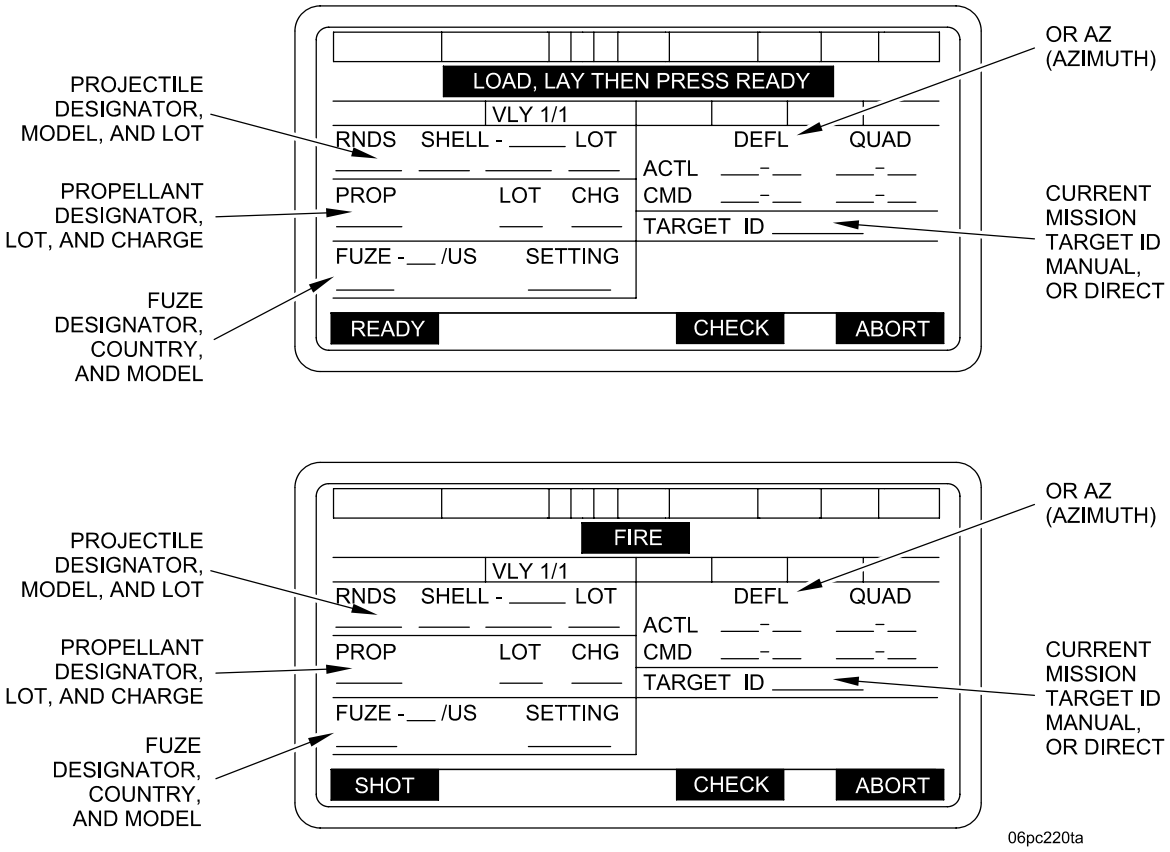

# M-8 PDFCS FIRE MISSION - CONTINUED

## M-8.1 Platoon Operation Center - Continued

b. DO NOT LOAD. This is a restrictive command that prohibits loading and firing. This is used when it is anticipated that significant time will elapse between loading and firing. When the DO NOT LOAD command is canceled, then the FIRE command is issued, and the same audible and visual alerts will be received as in AT MY COMMAND.

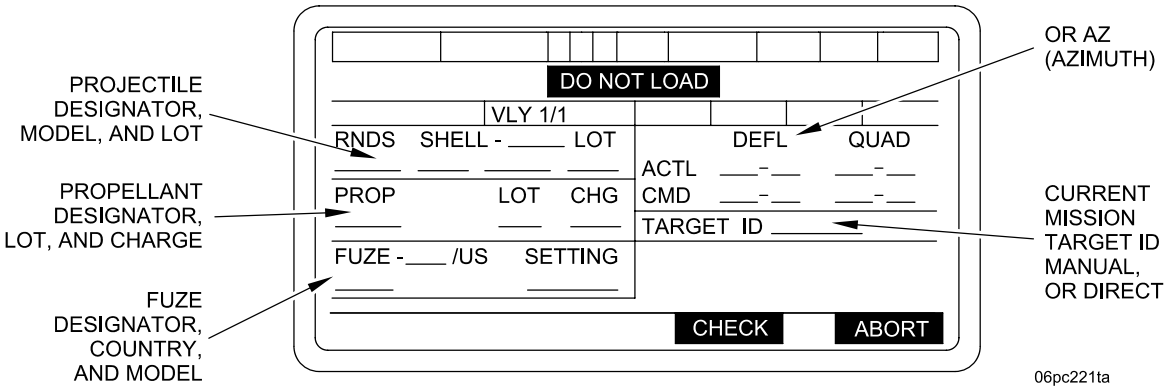


c. TIME TO FIRE (TTF) SEQUENCE. This sequence consists of the following:

(1) Ballistic sequencing is performed. (COMPUTING DO NOT LOAD)

(2) If no ABORT is performed during the ballistic sequencing the PDFCS operator is given the data.

(3) The PDFCS operator is told to “WAIT FOR XXX SECONDS” where xxx is the number of seconds remaining until time to fire.

(4) The “WAIT FOR XXX SECONDS” prompt is updated each second.

(5) When the countdown has expired, the PDFCS operator is told to “FIRE”.

(6) If this is not a FPF mission, then when the first shot out is detected, and there is a Continuous Fire Interval specified, processing continues using the Continuous Fire Interval sequence. If there are more rounds to fire, and a Continuous Fire Interval is not specified, the PDFCS operator is told to “FIRE WHEN READY” (similar to when ready sequencing subsequent rounds). Otherwise, if shot out is not detected within 20 seconds then the mission is automatically ended.

If this is a FPF mission, then when shot out is detected the PDFCS operator is told to “FIRE WHEN READY” again. This is repeated until the mission is ended and no rounds complete is generated.

(7) When rounds complete is detected the mission is automatically ended.

# M-8 PDFCS FIRE MISSION - CONTINUED

## M-8.1 Platoon Operation Center - Continued

d. CONTINUOUS FIRE INTERVAL SEQUENCE. The Continuous Fire Interval sequence shall be as follows for the second and subsequent rounds in a mission where a continuous fire interval is specified.

(1) Following the first round fired using the sequences described above, the operator shall be told to "WAIT FOR XXX SECONDS" where xxx is the number of seconds remaining until time to fire.

(2) The "WAIT FOR XXX SECONDS" prompt shall be updated each second.

(3) When the countdown has expired, the operator is told to "FIRE".

(4) If all rounds in the mission have not been shot, processing will sequence through steps 1, 2, and 3 above.

(5) When rounds complete is detected, the mission is automatically ended.

## M-8.2 Firing Mission.

**WARNING**

**The crew compartment must be adequately ventilated during all firing using the LEAD FILTER or ventilation system in accordance with para 2-22.2.**

When a fire mission is received, visual as well as an audible alert is given. The visual alerts are FIREMSN in Field 2 and OPERATOR ALERT AND ACK display. The audible alert can be heard by all crewmembers. When a fire mission is in process, each crewmember will perform his portion of the following:

a. GUNNER and CANNONEER stow seats (if not previously stowed).

b. Driver starts engine and/or raises idle speed to 1000-1200 rpm.

c. COS issues the fire order (for example, 1 round HE; charge 4 green bag; Fuze Time, Time 25.0) and activates the HYDRAULIC POWER switch on the hydraulic control box and the GUN SERVO switch on the PDU.

d. Cannoneer turns LEAD FILTER switch on the Accessory Control Box to ON and moves Vent Duct Control Handle into UP position.

e. GUNNER opens breech (first round only).

f. CANNONEER positions rammer to RAM position.

g. GUNNER prepares propellant (charge/zone taken from bustle stowage).

h. CANNONEER prepares projectile and fuze (sets time on fuze if necessary).

i. COS verifies projectile, fuze, fuze time and propellant and depresses LOAD key on PDU (if necessary).

j. When the tube is in the LOAD position, the CANNONEER places the projectile on the ram tray and activates rammer.

k. When the ramming cycle is complete, the CANNONEER places the rammer in the stowed position.

l. GUNNER places propellant in powder chamber and closes breech.

# M-8 PDFCS FIRE MISSION - CONTINUED

## M-8.2 Firing Mission - Continued

**NOTE**

When the PDFCS has laid the gun and the LAY key is highlighted the gun must stay within +/- 0.9 mils of the commanded deflection.

m. The COS presses and holds the LAY key on the PDU until the cannon is laid on the COMMAND FIRING data.

n. COS ensures that the gun is in the LAY position by verifying and announcing LAY light is highlighted (ACTUAL and COMMANDED DEFLECTION) and QUADRANT is within tolerance (+/- 0.9) and the prompt "WARNING TUBE IS NOT IN LAY POSITION'" is no longer displayed.

o. GUNNER verifies LAY data. If data is correct GUNNER will announce "Verified". (If data is incorrect GUNNER will announce "Check firing".)

p. COS gives the command to "PRIME".

**NOTE**

During high angle missions or illumination missions, it is recommended prime be done at load elevation.

q. COS commands "Hookup", CANNONEER attaches lanyard to firing block and announces "Hookup".

r. COS announces, "FIRE".

**NOTE**

If the Navigation Subsystem or PMVS are out, the PDFCS will not detect the shot, and COS must press the SHOT soft key after each round.

s. CANNONEER pulls the lanyard to fire the round.

t. The PDFCS is capable of automatically detecting Shot. In most cases pressing the SHOT soft key is not required. When a round is fired, the Navigation Subsystem and PMVS will detect the round. After the round is fired and detected by the PDFCS, the SHOT soft key will automatically disappear for 5 seconds, the Fire Mission will automatically decrement by one round (i.e. rounds to complete mission will decrease by one), and the Ammo Inventory will automatically be adjusted. In the very rare case that the PDFCS does not detect shot, the COS must press the SHOT soft key as before.

u. Cannoneer turns on Personnel Fan (Exhaust) switch on the Accessory Control Box and moves the Vent Duct Control Handle into DOWN position. Operate Personnel Fan for 1-2 minutes until all fumes are exhausted.

# M-8 PDFCS FIRE MISSION - CONTINUED

## M-8.2 Firing Mission - Continued

M-8.2.1 Subsequent Rounds. The first procedure is also used for all subsequent rounds in a fire mission. When all rounds have been fired for the mission, a VERIFY EXPENDED AMMO screen will be displayed. Ammunition accountability is covered in para M-8.3.

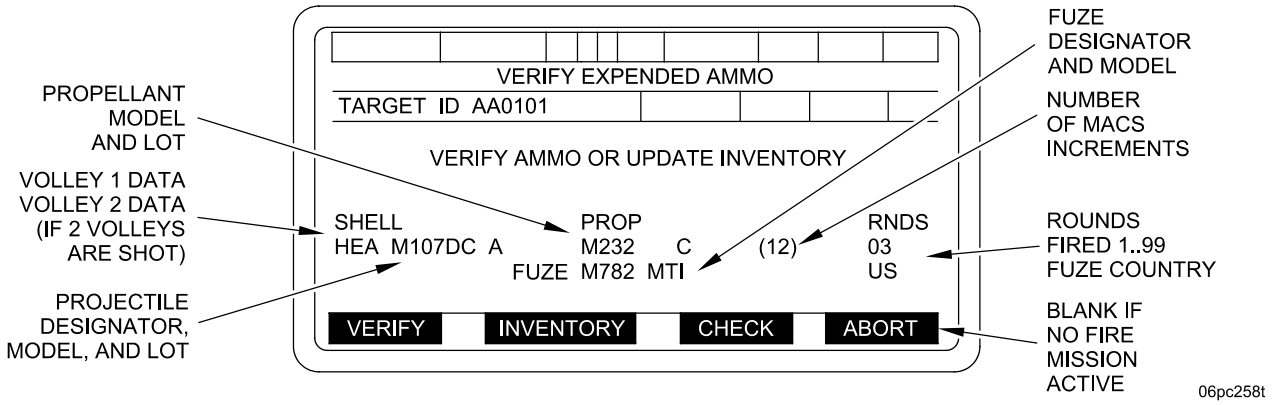


## M-8.3 Ammunition Accountability.

### NOTE

- If a shell, fuze or propellant is entered in the PDFCS inventory, but the quantity is insufficient for the mission, or zero, the PDFCS will prompt the Chief of Section to accept or reject the mission (in case a new load of ammunition just arrived and has not been entered into inventory yet).
- If a fire mission is activated while you are in any of the inventory management menus, all completed entries will be saved automatically.

It is essential that accurate ammunition updates to the PDFCS be done in order to be able to fire all missions received. This should be done after a mission is fired. When all rounds in a mission have been fired, a VERIFY EXPENDED AMMO screen is displayed. This screen asks the operator either to verify ammunition fired or to update the ammo inventory. This is accomplished as follows:

a. If the ammunition shown in the lower part of the VERIFY EXPENDED AMMO screen is an accurate account of the ammunition fired, press VERIFY key, to update the ammunition count. This updates the PDFCS ammunition count automatically.

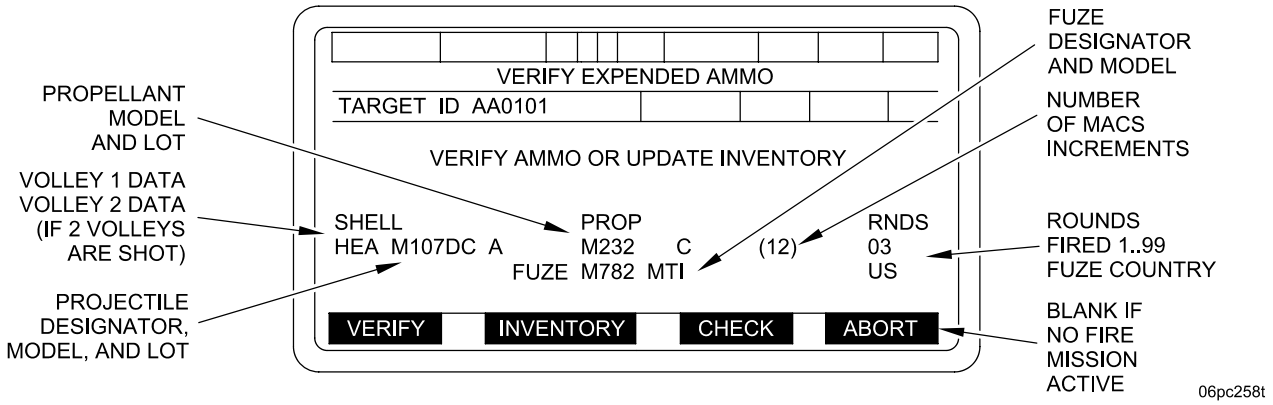

# M-8 PDFCS FIRE MISSION - CONTINUED

## M-8.3 Ammunition Accountability - Continued

b. If the ammunition shown on the VERIFY EXPENDED AMMO screen is not an accurate account of ammunition fired (for example, a compatible fuze was used as a substitute for the fuze specified in the mission), press the INVENTORY key. This causes an INVENTORY MANAGEMENT screen to be displayed.

**NOTE**

When INVENTORY key is pressed, SHELL, PROP and FUZE must be updated.

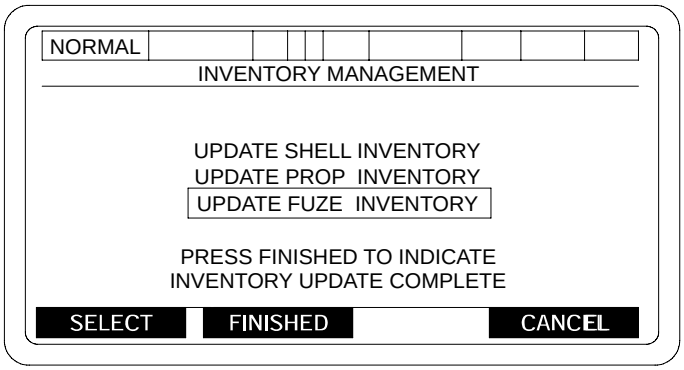


06pc172m

c. This will allow the operator to manually input the type of round actually fired and correct the ammo inventory.

d. If FINISHED is pressed at this point, the operator will be returned to a ROUND COMPLETE screen and none of the ammo from that fire mission will be subtracted from the inventory.

# M-8 PDFCS FIRE MISSION - CONTINUED

## M-8.4 End of Mission.

Notification that a Fire Mission has ended is sent by an END OF MISSION (EOM) message from the POC. Normally, this is done when all rounds requested in a Fire Mission have been fired. When all the rounds for a mission have been fired, a ROUNDS COMPLETE OR MISSION PAUSED, AWAITING EOM OR CONTINUATION OF MISSION screen will be displayed until an EOM message is sent from the POC. When the EOM message is received by the PDFCS, an END OF MISSION screen is displayed.

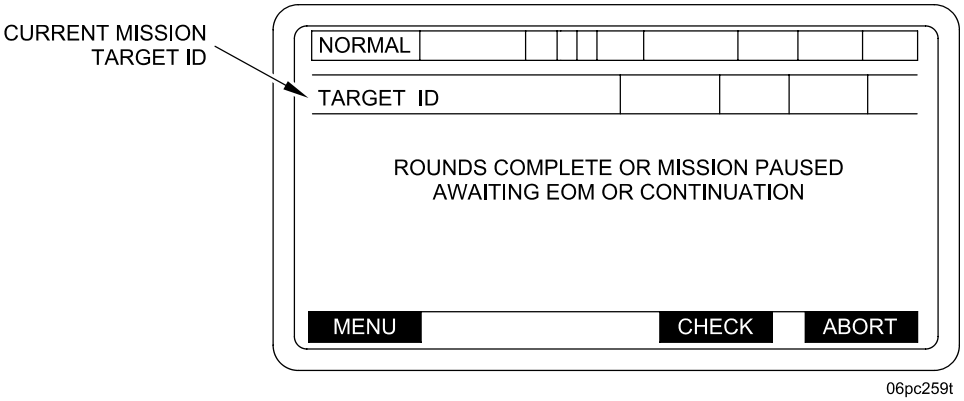


**CAUTION**

Operate Personnel Fan (Exhaust) switch on the Accessory Control Box with the Vent Duct Control Handle in DOWN position for 2 minutes when crew members observe fumes, smoke or indication of carbon monoxide build up in the crew compartment.

**NOTE**

While awaiting EOM or continuation of a mission, you can access the SETUP AND INFORMATION menus by pressing the MENU key (e.g. to update inventory to add new ammo received). The PDFCS will automatically interrupt whatever you are doing if the fire mission is continued.

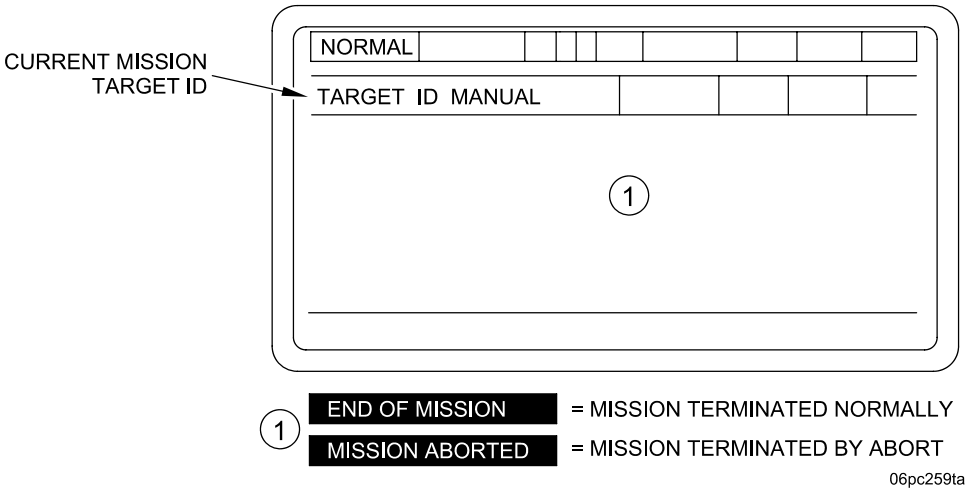

# M-8 PDFCS FIRE MISSION - CONTINUED

## M-8.5 PDFCS Emergency Mission.

Because the M109A6 makes frequent tactical and survivability moves, receiving a Fire Mission while moving will become a routine event. During a move, a Fire Mission order may be sent requiring the individual howitzer to stop, emplace, and fire on a target at any time. When this type of order is sent, an audible alert and a visible alert in the form “FIREMSN RECEIVED”, “ACK” in field 16 is displayed to the operator.

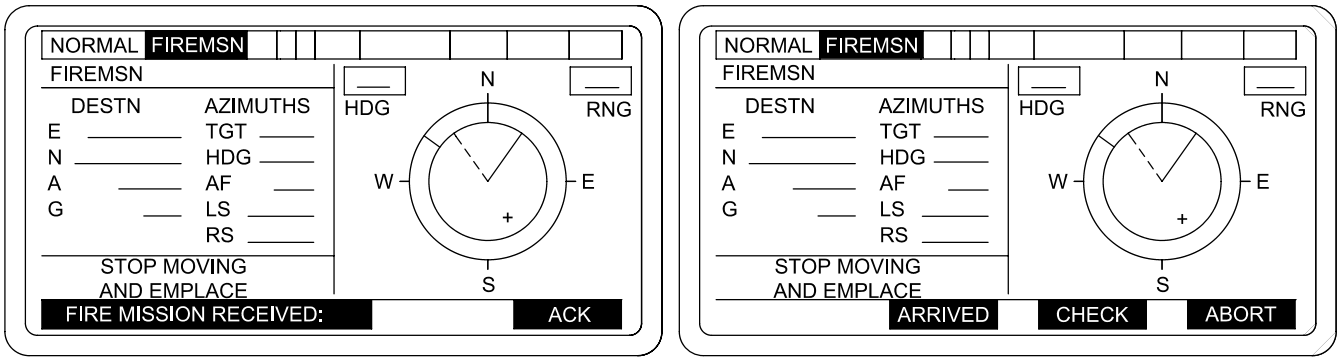


06pc274t

M-8.5.1 Emplace.

The chief of section must ACK the mission and select a suitable firing position as quickly as possible. Depress ARRIVED soft key to receive the Fire Mission. Fire Mission data will be computed and displayed.

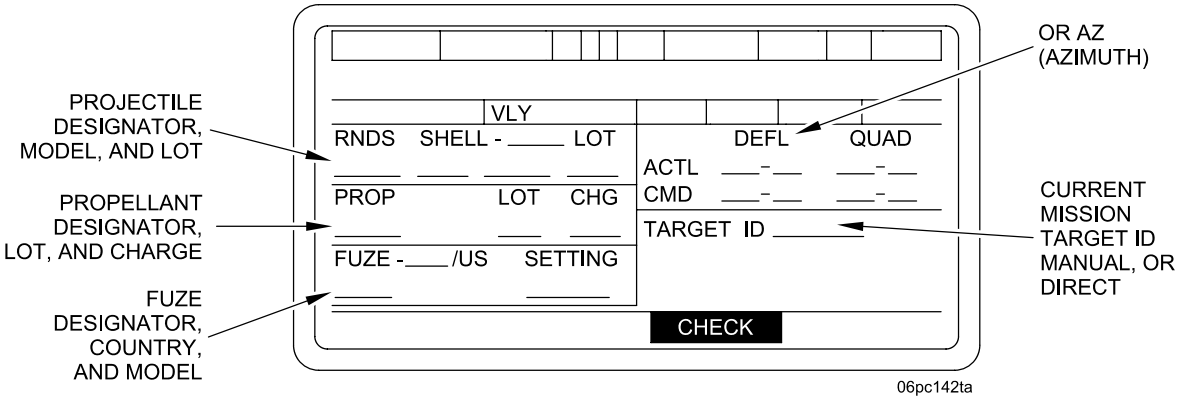


06pc142ta

# M-8 PDFCS FIRE MISSION - CONTINUED

## M-8.5 PDFCS Emergency Mission - Continued

M-8.5.2 Ready Gun.

a. Set HYDRAULIC POWER switch on hydraulic control box and GUN SERVO switch on PDU to ON.

b. Release gun tube from travel lock.

c. Release cab traverse lock.

M-8.5.3 LAY, LOAD, LAY, AND FIRE.

**NOTE**

Ballistic computations must have been completed before LAY key is depressed.

a. Depress and hold LAY key to bring gun to target Azimuth and LAY elevation. Look through tube and verify immediate Crest is clear.

b. Depress LOAD key to LAY weapon on COMMANDED deflection and LOAD quadrant.

c. Depress LAY key to LAY weapon on COMMANDED deflection and quadrant. Ensure LAY key is held until LAY indicator is highlighted.

d. On command, fire the gun.

M-8.5.4 End of Mission.

a. When END OF MISSION message is received, wait for instructions to proceed with displacement.

b. After the END OF MISSION message, the MOVE ORDER screen with previous move mission data will be displayed.

c. Turn on Personnel Fan (Exhaust) switch on the Accessory Control Box and move the Vent Duct Control Handle into DOWN position. Operate Personnel Fan for 1-2 minutes until all fumes are exhausted.

d. Proceed to ordered destination.

**CAUTION**

Operate Personnel Fan (Exhaust) switch on the Accessory Control Box with the Vent Duct Control Handle in DOWN position for 2 minutes when crew members observe fumes, smoke or indication of carbon monoxide build up in the crew compartment.

# M-8 PDFCS FIRE MISSION - CONTINUED

## M-8.6 Direct Fire Procedures Using PDFCS.

**NOTE**

While the PDFCS can be used, manual (one man-one sight) procedures have been found to be faster and just as accurate.

For direct fire against close range targets, PDFCS can be used to aid in laying the cannon. COS identifies target, states type charge, projectile and fuze to be used, estimates speed (if target is moving) and announces lead to GUNNER. COS continues direct firing procedures until target is destroyed.

a. COS first identifies direct fire target. If target consists of several weapons, he selects target that is the greatest threat to his position.

b. COS gives fire command in the following order:

| ELEMENT | EXAMPLE |
|---|---|
| Target designation | Target, lead tank |
| Target direction | Left/right front |
| Projectile, charge, fuze | Shell HE, charge 7, fuze quick |
| Lead | Lead left/right 10 |
| Method of fire | Fire at will |

**NOTE**

- "Fire at will" means to keep firing until target is destroyed or another command is given.
- COS will estimate range if he has no accurate range.
- COS will use lead chart mounted in commander's cupola (shown below) for initial lead.

**DIRECT FIRE MOVING TARGET LEAD**

| TARGET SPEED (MPH) | TARGET DIRECTION OF TRAVEL LEAD IN MILS (m) | | |
|---|---|---|---|
| | ↔ | ⤫ | ↕ |
| 5 | 5m | 5m | 0m |
| 10 | 10m | 5m | 0m |
| 15 | 15m | 10m | 0m |
| 20 | 20m | 15m | 0m |
| 25 | 20m | 15m | 0m |
| 30 | 30m | 20m | 0m |

c. On Display Unit COS sets GU N SERVO switch to OFF.

# M-8 PDFCS FIRE MISSION - CONTINUED

## M-8.6 Direct Fire Procedures Using PDFCS - Continued

d. On hydraulic control box (1), turn HYDRAULIC POWER switch (2) to ON, TRAVERSE MODE switch (3) to POWER, TRAVERSE CONTROL switch (4) to GUNNER, and ELEVATE CONTROL switch (5) to COS.

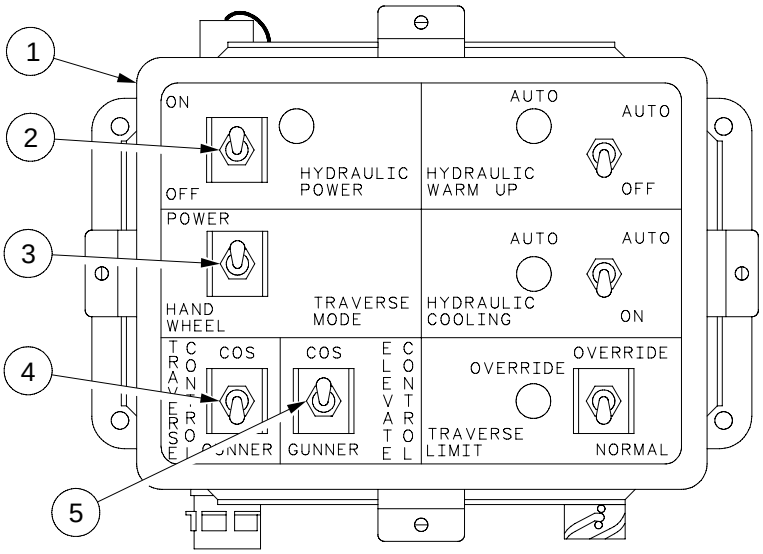


hipc173a

e. Bring up SETUP AND INFORMATION menu on Display Unit.

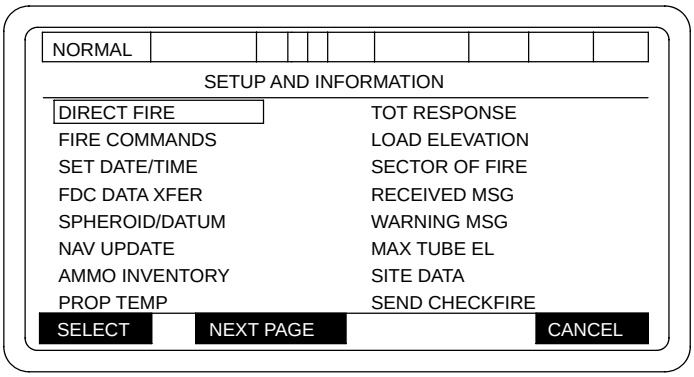


06pc260t

### NOTE

The NAV update selection shall be available to the PDFCS operator at all times except when a fire mission is active or the navigation subsystem is unavailable.

# M-8 PDFCS FIRE MISSION - CONTINUED

## M-8.6 Direct Fire Procedures Using PDFCS - Continued

f. With cursor (box) at DIRECT FIRE, press soft key located directly beneath SELECT prompt to display a DIRECT FIRE MODE ENTRY menu on PDU.

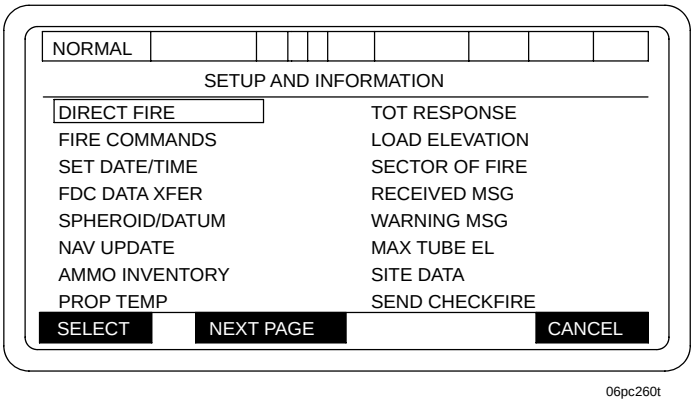


06pc260t

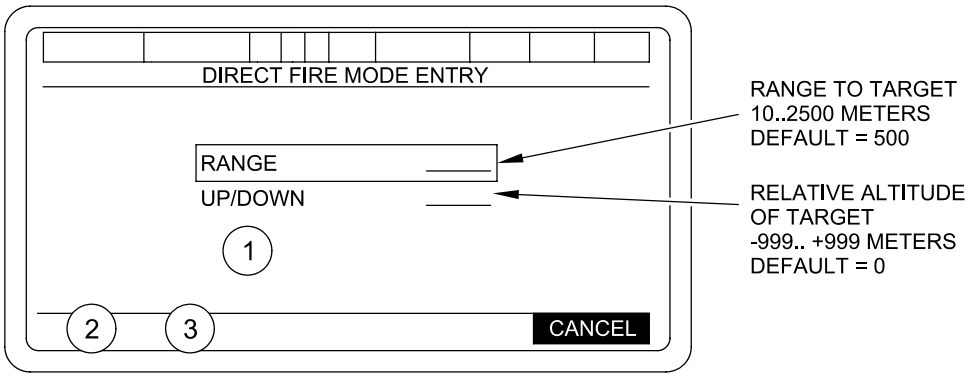


06pc183ma

(1) blank - No selection made
"TYPE VALUE 10 TO 2500 METERS" - RANGE Selected.
"-PRESS ENT KEY-"
"TYPE VALUE -999 TO +999" - UP/DOWN Selected.
"-PRESS ENT KEY-"

(2) blank - If RANGE or UP/DOWN Selected

SELECT -Awaiting Selection or USE ALL. Selects current menu item.

(3) blank - If RANGE Selected

+/- - UP/DOWN Selected. Change sign of value

USE ALL - Awaiting Selection or USE ALL. Initiate direct fire mission.

# M-8 PDFCS FIRE MISSION - CONTINUED

## M-8.6 Direct Fire Procedures Using PDFCS - Continued

g. Press soft key located directly beneath the USE ALL prompt of the DIRECT FIRE MODE ENTRY menu to display a FIRE MISSION menu.

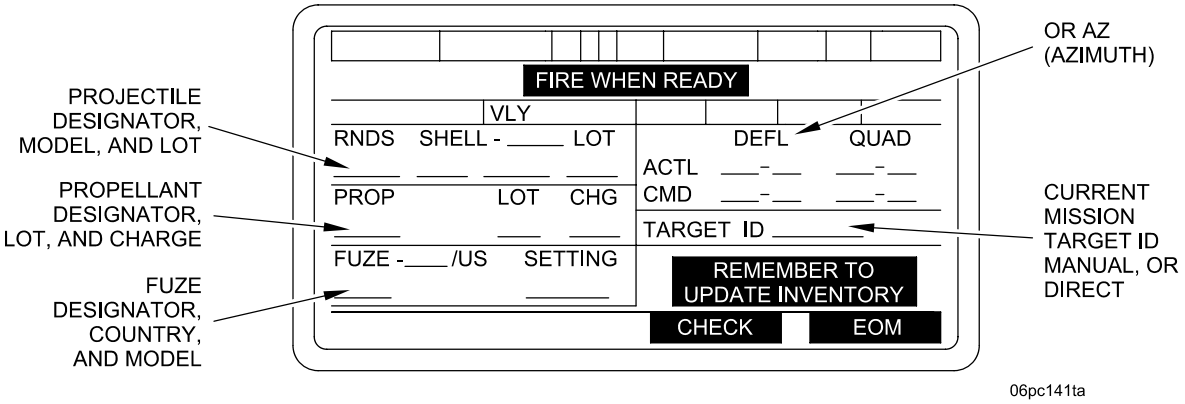


**NOTE**

You will only use the ACTL QUAD field of this screen to set tube elevation.

h. Using the DIRECT FIRE RANGE PLATE, the COS determines elevation based on estimated range. Using COS control handle, COS elevates/depresses gun to proper elevation in the ACTL QUAD field of the FIRE MISSION menu, then announces "SET" continually until howitzer is fired.

**DIRECT FIRE RANGE PLATE**
**155MM HOWITZER**

| M549A1 RAP | | M107 HE PROJECTILE | |
|---|---|---|---|
| ROCKET OFF | | M19A1 PC WB | |
| M203 SERIES PC RB | | M119A2 PC RB | |
| RANGE METERS | ELEV MILS | RANGE METERS | ELEV MILS |
| 400 | 3 | 400 | 4 |
| 600 | 5 | 600 | 7 |
| 800 | 6 | 800 | 9 |
| 1000 | 8 | 1000 | 11 |
| 1200 | 9 | 1200 | 14 |
| 1400 | 11 | 1400 | 16 |
| L15 HE PROJECTILE | | M107 HE PROJECTILE | |
| M203 SERIES PC RB | | M4A2 PC WB | |
| RANGE METERS | ELEV MILS | RANGE METERS | ELEV MILS |
| 400 | | 400 | 6 |
| 600 | | 600 | 10 |
| 800 | | 800 | 13 |
| 1000 | | 1000 | 16 |
| 1200 | | 1200 | 20 |
| 1400 | | 1400 | 23 |
| PLATE DIRECT FIRE | | P/N 12910859 | |

# M-8 PDFCS FIRE MISSION - CONTINUED

## M-8.6 Direct Fire Procedures Using PDFCS - Continued

i. On subsequent rounds, the COS will estimate a new range based on observed effects and repeat step h until target is destroyed or other commands become necessary.

j. GUNNER sets azimuth counter (6) to 3200, and turns direct/indirect fire bar knob (7) to DIRECT position to engage 5.0 mils per click sight mechanism.

**NOTE**

The head of the PANTEL must remain oriented with the gun tube. The PANTEL will be oriented with the gun tube if the azimuth counter reads 3200 and the PANTEL is properly boresighted.

k. If central laying is used, GUNNER applies announced lead to azimuth counter (6). If lead is left, add the lead angle to 3200; if lead is right, subtract the lead angle from 3200. The GUNNER then sights through the eyepiece (8) and traverses tube until vertical hairline (9) of PANTEL centers on the target. If reticle method is used, GUNNER places vertical hairline (10) left or right of target the number of mils lead announced by COS.

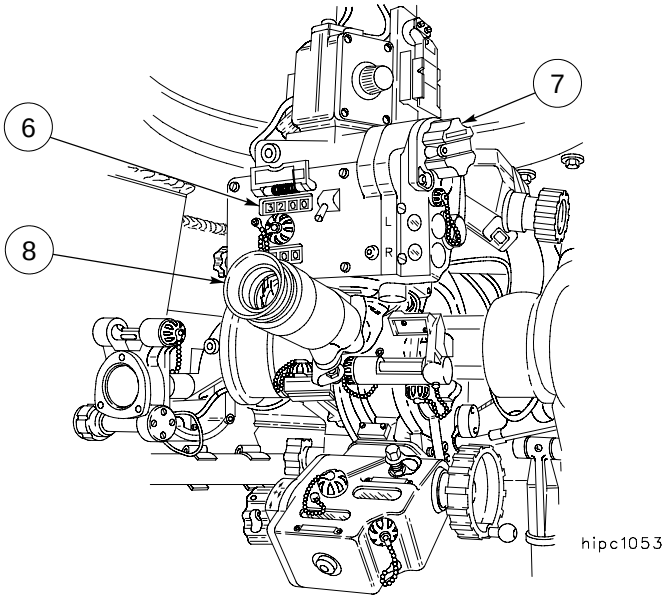


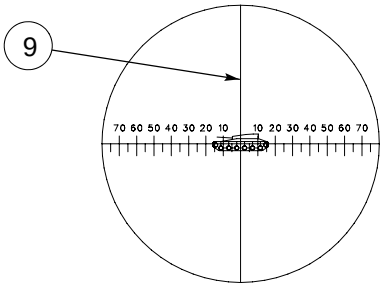


CENTRAL LAYING

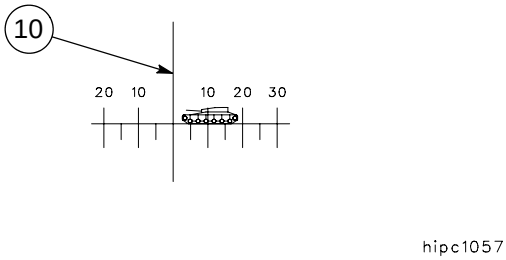


RETICLE METHOD

# M-8 PDFCS FIRE MISSION - CONTINUED

## M-8.6 Direct Fire Procedures Using PDFCS - Continued

l. When GUNNER establishes correct sight picture, and COS has announced “SET,” GUNNER commands “FIRE.”

m. CANNONEER fires gun.

n. After firing, GUNNER continues to lay on target until it is destroyed or a subsequent fire command is issued.

o. COS gives subsequent fire commands based on observed effects and changes lead as necessary.

| ELEMENT | EXAMPLE |
|---|---|
| Change in Lead | Right/left 5 |

p. GUNNER turns azimuth deflection knob in 5-mil (1-click) increments to set lead change.

## M-8.7 System Menus.

The SETUP AND INFORMATION menu is used to access the various screens to initialize the PDFCS and align the Navigation System. It also provides access to menus allowing the operator to enter fire commands and muzzle velocities, access messages, and to monitor PDFCS STATUS and tube temperature. The operator can change the display format and intensity, input Manual Move Orders, perform a system update, and access stored targets. The operator can enter a SPHEROID/DATUM; can access the MAINTENANCE MODE MENU; and can update his ammunition inventory. This will complete the capabilities of the system menus.

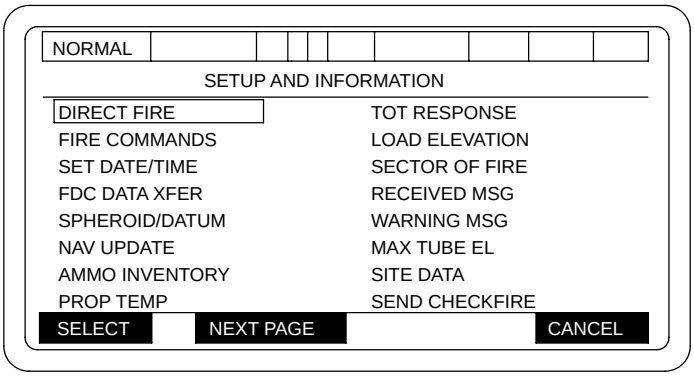


06pc260t

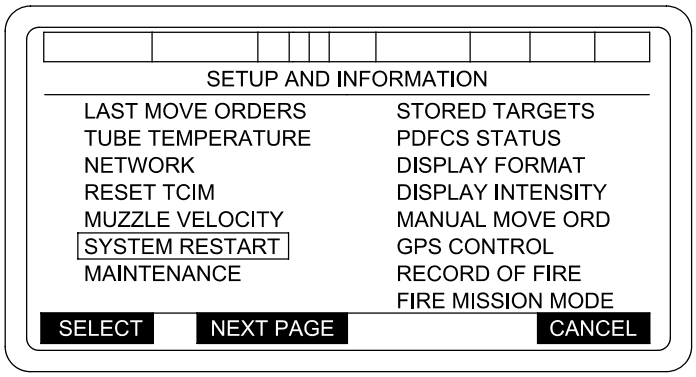


06pc261ta

# M-8 PDFCS FIRE MISSION - CONTINUED

## M-8.7 System Menus - Continued

M-8.7.1 Fire Commands. If the Ballistic Computer or digital communications is out, fire commands (deflection and quadrant) will be sent by voice to the howitzer COS. The operator will enter these fire commands manually as follows:

a. Box in FIRE COMMANDS on SETUP AND INFORMATION menu and press SELECT key to display a FIRE COMMANDS ENTRY screen.

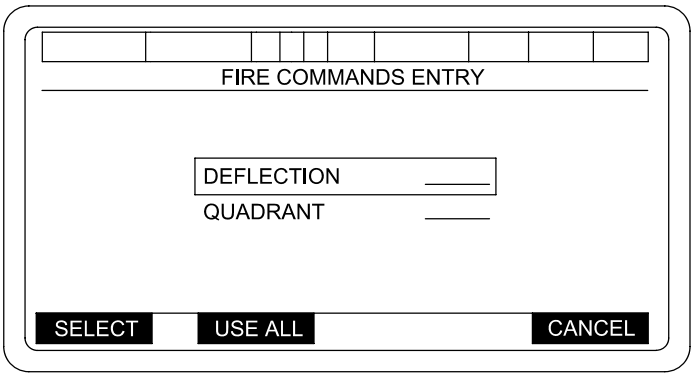


06pc204tb

b. With the FIRE COMMANDS ENTRY screen displayed, box in DEFLECTION; press SELECT key; type in deflection; and press ENT key.

c. Box in QUADRANT and press SELECT key. Type in quadrant and press ENT key.

d. When correct fire command has been entered, press USE ALL key to display a FIRE MISSION screen with firing data in the COMMANDED (CMD) field.

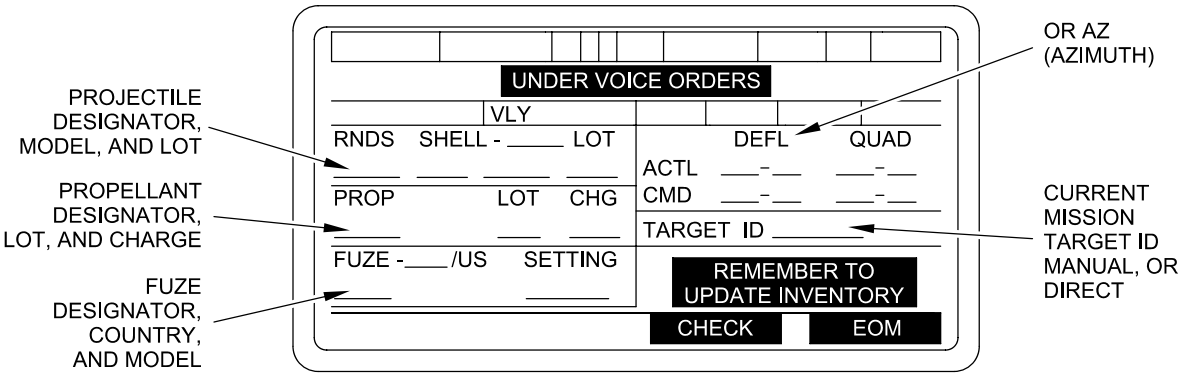


06pc144ta

e. The fire mission is fired using normal procedures.

f. When the voice order to end the mission is received, press the EOM key.

g. Ammo accountability is then manually processed (para M-8.3).

# M-8 PDFCS FIRE MISSION - CONTINUED

## M-8.7 System Menus - Continued

M-8.7.2 Messages. The two types of PDFCS messages accessed from the SETUP AND INFORMATION menu are RECEIVED MSG and WARNING MSG. The received messages are ones received from the POC and the warning messages are generated by the PDFCS for system status. When there is a new message to read, a RCVD MSG (R) highlighted field 5 or WARN MSG (W) highlighted field 4 indicator will be displayed at the top of the screen. Access messages using the following procedures:

a. Box in desired message on SETUP AND INFORMATION menu and press SELECT key to display a RECEIVED MESSAGE/SYSTEM WARNING MESSAGE.

b. If more than one message is in the message queue, display next message by pressing the NEXT MSG key. If a message contains more than one page, display next page by pressing NEXT PAGE key.

c. To return to the SETUP AND INFORMATION menu, press CANCEL key.

**NOTE**

- The PDFCS shall keep three (3) messages in a buffer. If there are more than three unviewed messages, the PDFCS shall discard the oldest and display the error message “MESSAGES HAVE BEEN LOST” “ACK” to the operator upon entry into the screen.
- The RECEIVED MESSAGE counter has a range from 0001 to 9999 and will reset on each powerup.

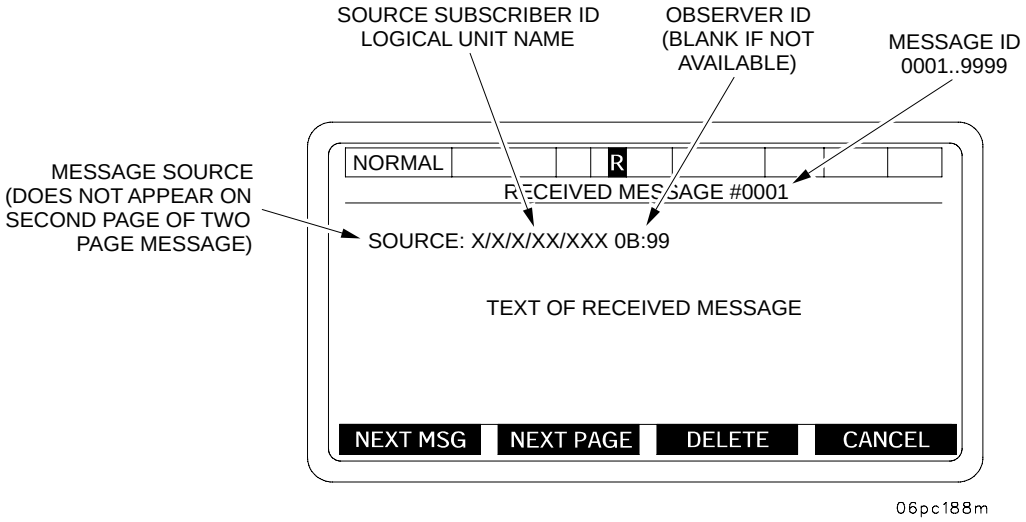


NEXT MSG = DISPLAY NEXT MESSAGE (IF THERE ARE NO ADDITIONAL MESSAGES THEN THE SCREEN DISPLAYS “NO MORE MESSAGES”)

NEXT PAGE = DISPLAY NEXT PAGE (BLANKED IF NO NEXT PAGE)

DELETE = DELETE CURRENT MESSAGE (IF THERE ARE NO MORE MESSAGES THEN “NO MORE MESSAGES” IS DISPLAYED)

# M-8 PDFCS FIRE MISSION - CONTINUED

## M-8.7 System Menus - Continued

M-8.7.2 Messages - Continued

**NOTE**

The SYSTEM WARNING MESSAGE counter has a range from 0001 to 9999 and will reset on each powerup.

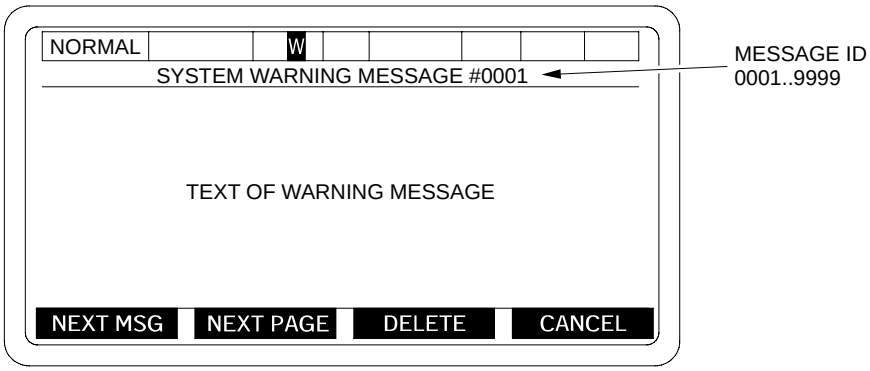


06pc189m

NEXT MSG = DISPLAY NEXT MESSAGE (IF THERE ARE NO ADDITIONAL MESSAGES THEN THE SCREEN DISPLAYS "NO MORE MESSAGES")

NEXT PAGE = DISPLAY NEXT PAGE (BLANKED IF NO NEXT PAGE)

DELETE = DELETE CURRENT MESSAGE (IF THERE ARE NO MORE MESSAGES THEN "NO MORE MESSAGES" IS DISPLAYED)

M-8.7.3 Maximum Tube Elevation. From the SET UP AND INFORMATION menu select "MAX TUBE EL" to input the maximum tube elevation.

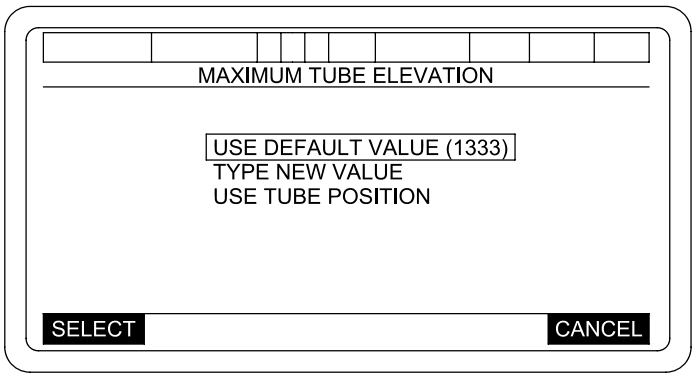


06pc154ma

a. Entering MAXIMUM TUBE ELEVATION. If a maximum tube elevation is not entered, the default value as shown on the display will be entered automatically. If an elevation other than the default value is desired, the entry can be made by either of two methods:

# M-8 PDFCS FIRE MISSION - CONTINUED

## M-8.7 System Menus - Continued

M-8.7.3 Maximum Tube Elevation - Continued

**NOTE**

Numerical value must be entered before sign.
Default sign is (+).

b. Box in TYPE NEW VALUE and depress SELECT to bring up a new MAXIMUM TUBE ELEVATION display. Enter required value for MAX TUBE EL and press ENT key.

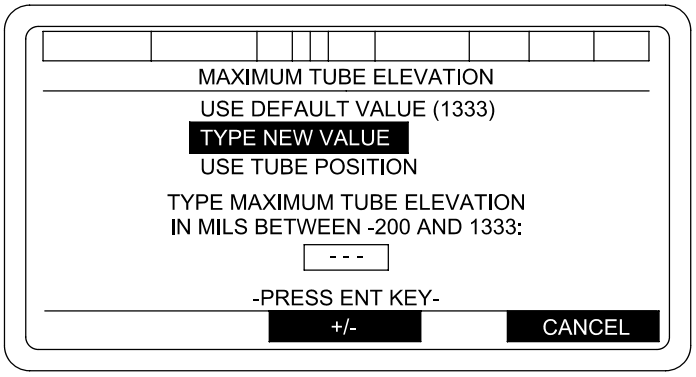


06pc655m

c. Box in USE TUBE POSITION and press SELECT key to bring up a new MAXIMUM TUBE ELEVATION display. Using the COS or gunner's control handle, move tube to desired elevation and press ENT key.

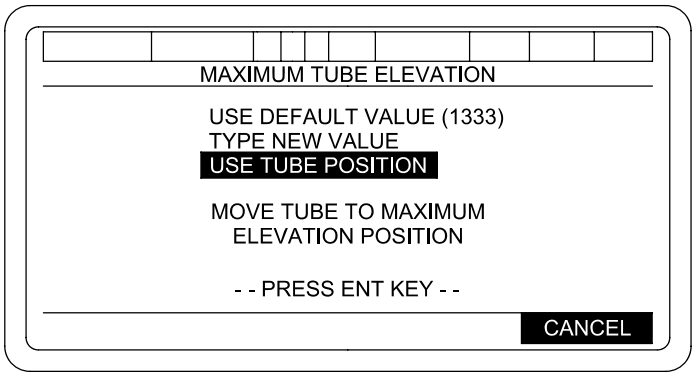


06pc156ma

# M-8 PDFCS FIRE MISSION - CONTINUED

## M-8.7 System Menus - Continued

M-8.7.4 Send Checkfire. Selecting SEND CHECKFIRE will result in questions asked, “ARE YOU SURE”, “YES” “NO”. “YES” selection will cause all howitzer systems to be placed on CHECKFIRE. Only the POC/FDC can cancel the CHECKFIRE. “NO” selection = No action.

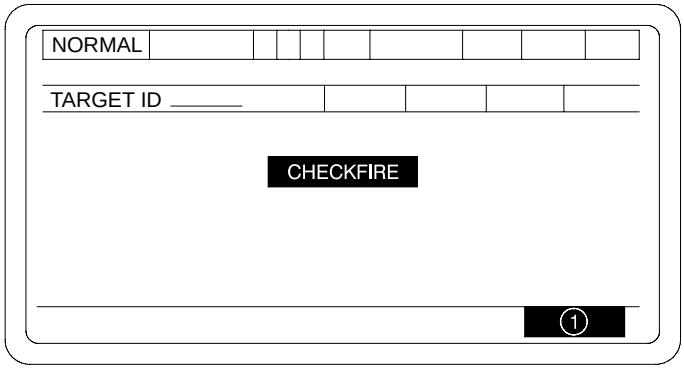


1 EOM = MISSION is direct or manual

ABORT = MISSION is not direct or manual

06pc145t

M-8.7.5 Stored Targets. The PDFCS can store up to ten targets. These targets can be reviewed for information concerning target number, rounds to be fired, shell, propellant, fuze, and method of control. To access the target summary, perform the following steps:

a. Box in STORED TARGETS on SETUP AND INFORMATION menu and press SELECT key to display a STORED TARGET SUMMARY screen.

b. If there is more than one page, press NEXT PAGE key to display next page.

c. To return to SETUP AND INFORMATION menu, press CANCEL key.

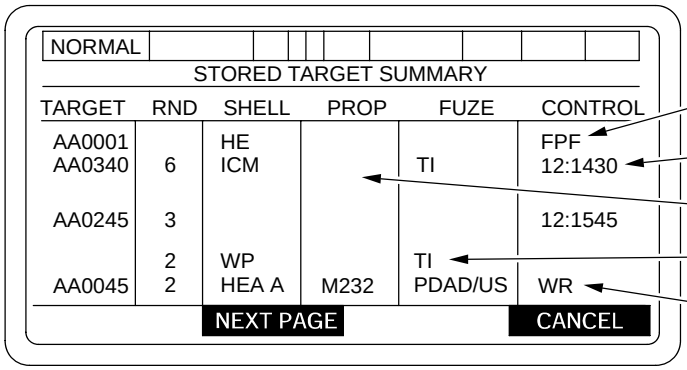


06pc145ta

NEXT PAGE = SHOWS NEXT PAGE. IF LAST PAGE, THEN SHOWS FIRST PAGE. (BLANKED IF ONLY ONE PAGE OR NO TARGETS).

### NOTE

- Shell and fuze entries will be blank if the stored mission arrives from the FDC with unspecified ammunition and is not an FPF mission (as shown above in target ID AA0245).
- Targets with RND (rounds) over 99 are displayed with **.

# M-8 PDFCS FIRE MISSION - CONTINUED

## M-8.7 System Menus - Continued

M-8.7.6 PDFCS Status. To display the PDFCS SUBSYSTEM STATUS, proceed as follows:

a. Box in PDFCS STATUS on SETUP AND INFORMATION menu and press SELECT to display the PDFCS STATUS screen.

b. Cursor and select a PDFCS SUBSYSTEM to view the sub-components. The status of each sub-component will be displayed either "OK" or "FAIL".

c. To return to the SETUP AND INFORMATION menu, press CANCEL key.

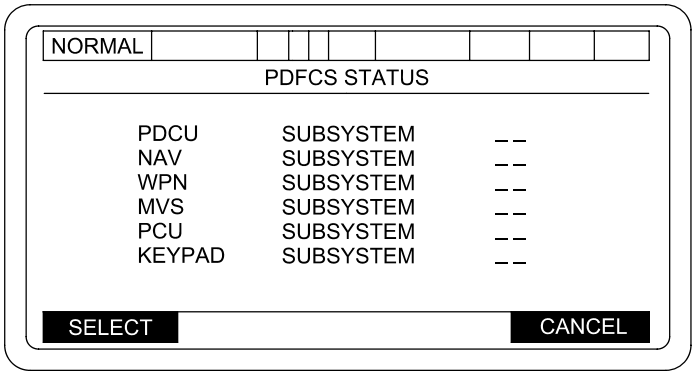


06pc638ma

M-8.7.7 Last Move Orders. To display the last move orders received by the PDFCS, proceed as follows:

a. Box in LAST MOVE ORDERS on SETUP AND INFORMATION menu and press SELECT key. A STEERTO FIRE AREA screen will be displayed showing LAST MOVE ORDERS.

b. Press the EMPLACE key to display an EMPLACE FIRE AREA screen showing LAST MOVE ORDERS.

c. From STEERTO FIRE AREA or EMPLACE FIRE AREA screen, the SETUP AND INFORMATION menu can be reached by pressing the CANCEL key.

**NOTE**

This will not be available after the first Survivability Move.

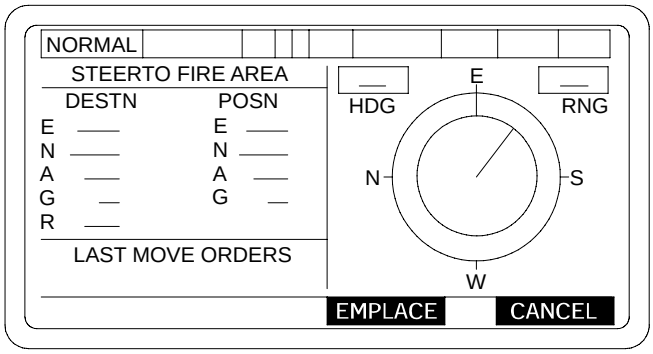


06pc191m

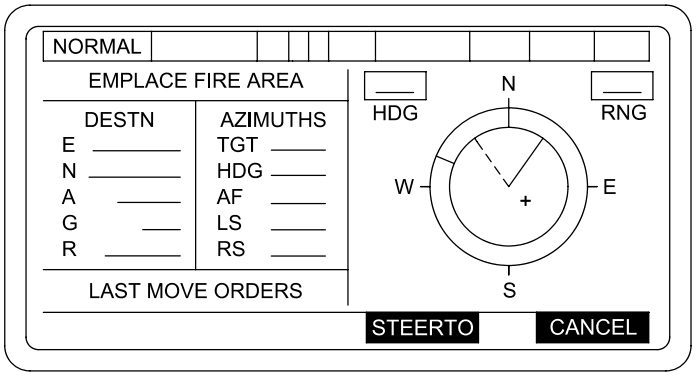


06pc192ma

# M-8 PDFCS FIRE MISSION - CONTINUED

## M-8.7 System Menus - Continued

M-8.7.8 Tube Temperature. The TUBE TEMPERATURE STATUS is shown on the FIRE MISSION screen as COLD, WARM, or HOT; and a time is displayed which indicates how long a complete round may remain in the tube. TUBE TEMPERATURE STATUS can also be displayed as follows:

a. Box in TUBE TEMPERATURE on SETUP AND INFORMATION menu and press SELECT key.

b. A TUBE TEMPERATURE screen will be displayed showing TEMPERATURE STATUS (COLD, WARM, HOT), and SAFE TIME IN TUBE.

c. To return to SETUP AND INFORMATION menu, press CANCEL key.

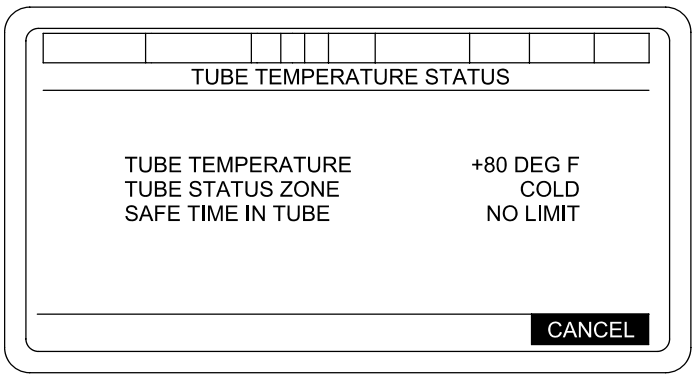


06pc193ma

M-8.7.9 System Restart. To do a SYSTEM RESTART without shutting the system off and powering back-up, proceed as follows:

a. Box in SYSTEM RESTART on SETUP AND INFORMATION menu and press SELECT key. A prompt will be displayed, “ARE YOU SURE”, “YES” or “NO”.

b. The system will restart at a POWER UP STATUS.

c. “INITIALIZATION” must be performed.

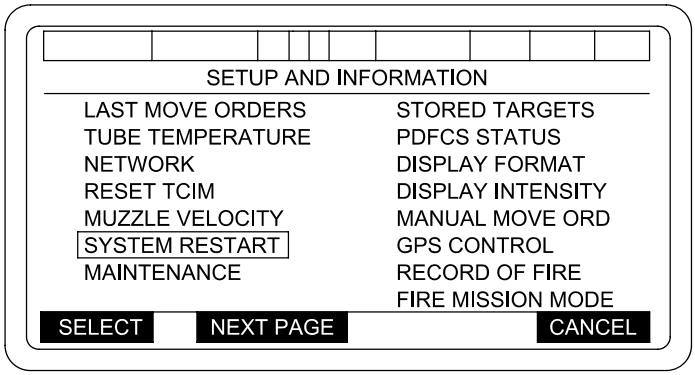


06pc261ta

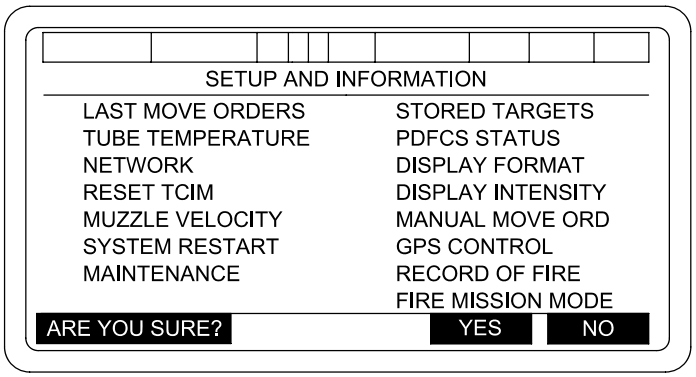


06pc261tb

# M-8 PDFCS FIRE MISSION - CONTINUED

## M-8.7 System Menus - Continued

M-8.7.10 Display Format. This function is used to change the display of the tube position from AZIMUTH to DEFLECTION, and vice versa; or the TEMPERATURE STATUS display from Fahrenheit to Celsius, and vice versa. This display format is changed as follows:

a. Box in DISPLAY FORMAT on SETUP AND INFORMATION menu and press SELECT key to display a DISPLAY FORMAT screen.

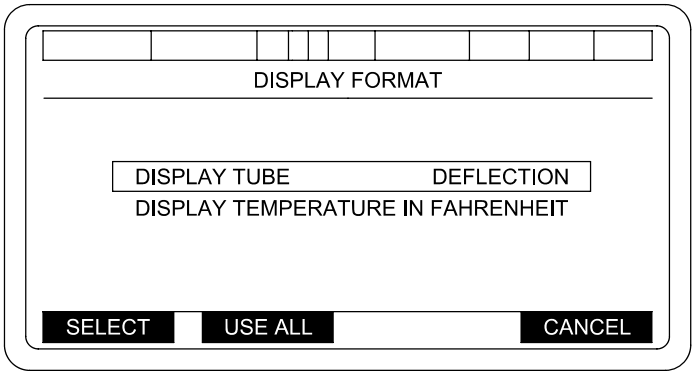


06pc196ma

b. To change deflection, box in DISPLAY TUBE DEFLECTION and press SELECT to display another DISPLAY FORMAT screen.

c. This screen asks the question: CHANGE TO AZIMUTH/DEFLECTION? Press the appropriate soft key, YES or NO. This will return the display to the original DISPLAY FORMAT screen.

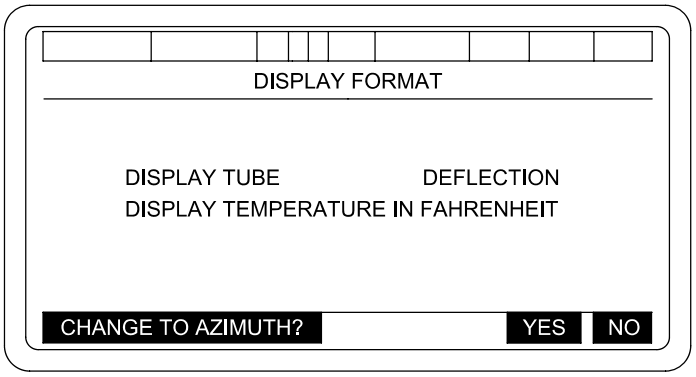


06pc197ma

# M-8 PDFCS FIRE MISSION - CONTINUED

## M-8.7 System Menus - Continued

M-8.7.10 Display Format - Continued

d. To change the temperature display, box in DISPLAY TEMPERATURE IN FAHRENHEIT and press SELECT key to display another DISPLAY FORMAT screen.

e. Answer screen question CHANGE TO CELSIUS/FAHRENHEIT? by pressing appropriate soft key.

f. When original DISPLAY FORMAT screen is displayed, press USE ALL key to return to SETUP AND INFORMATION menu.

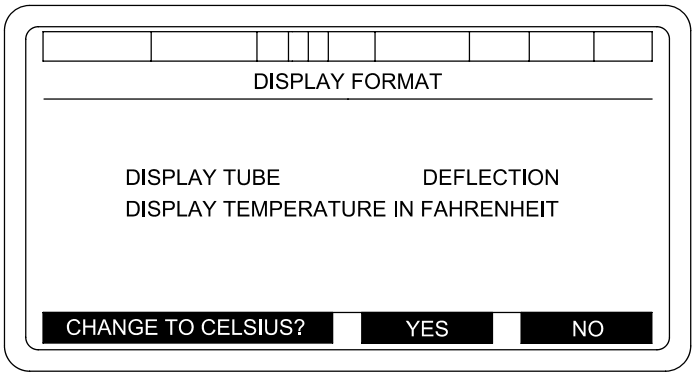


06pc198m

M-8.7.11 Display Intensity. Display intensity is set using the buttons on the left side of the PDFCS PDU. If DISPLAY INTENSITY on SETUP AND INFORMATION menu is selected, the following screen will be displayed.

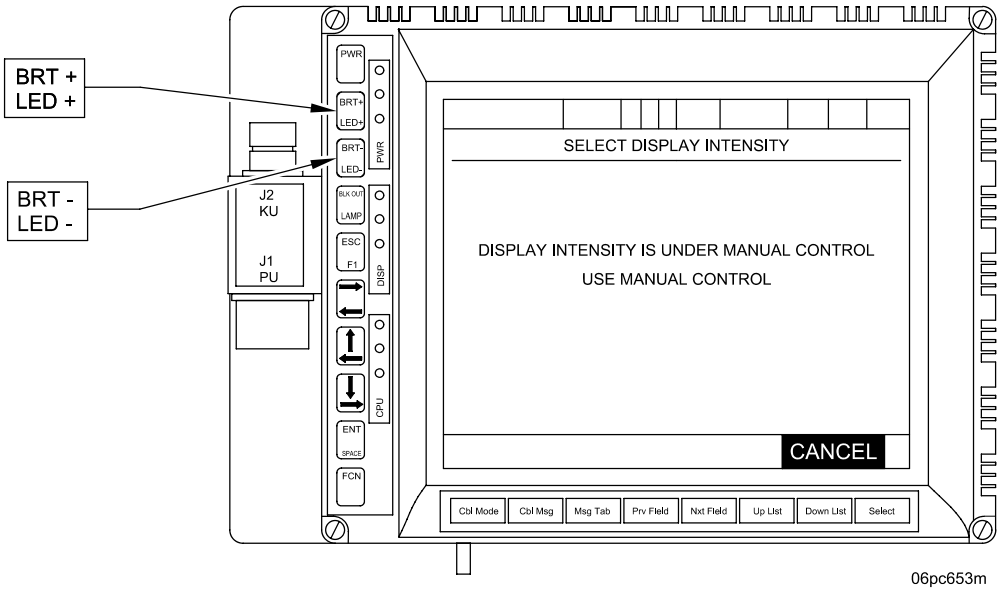


06pc653m

# M-8 PDFCS FIRE MISSION - CONTINUED

## M-8.7 System Menus - Continued

M-8.7.12 Manual Move Order. When it is necessary to move the howitzer without a move order from the POC, enter the movement data as follows:

a. Box in MANUAL MOVE ORDER on SETUP AND INFORMATION menu and depress SELECT key to display a MANUAL MOVE ORDER ENTRY screen.

b. Enter data by boxing in each data field and then typing in desired data. As each field is filled, press ENT key to enter data.

c. When all data has been entered, press USE ALL key. This will cause the SETUP AND INFORMATION screen to be displayed with MOVE ORD at the top. Press CANCEL key to display the MOVE ORDER screen (STEERTO or EMPLACE).

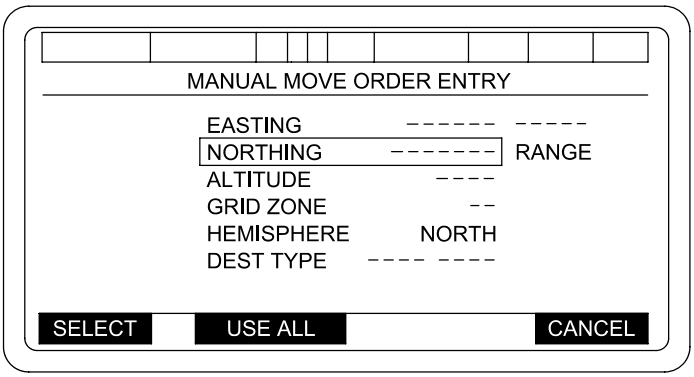


06pc262t

**NOTE**

- If the Move Order coordinates are outside the Map Mod, no PDFCS warning message will be issued. All Move Order coordinates should be checked with a map spot, or through some other secondary means to insure they are within the current Map Mod.
- If the Move Order coordinates are in an adjacent Grid Zone, the PDFCS will automatically convert these coordinates to the Map Mod Grid Zone. Once the STEER TO screen is displayed, the entered coordinates will be converted to the Map Mod Grid Zone. If a map spot is performed, the Map Mod Grid Zone will need to be extended into the adjacent Grid Zone.
- If Destination Type is to a FIRING POINT, Operator must input SECTOR OF FIRE prior to inputting a Manual Move Order.

# M-8 PDFCS FIRE MISSION - CONTINUED

## M-8.7 System Menus - Continued

M-8.7.12 Manual Move Order - Continued

- Destination Types are: LOG POINT (for resupply), INIT POINT (for survey control point) and FIRE POINT.
- If DO NOT MOVE was on the screen before you start this move, the PDFCS will notify FDC that the howitzer is moving.
- RANGE shows the distance to the entered point from the current location based on easting and northing. It is not operator selectable. Move order distance will only be displayed up to 99,999 meters. If the value is 100,000 to 350,000 meters, "*****" will be displayed. If the value is more than 350,000 meters you will receive an error message, "DISTANCE EXCEEDS 350 KM" "ACK".
- If the position entered is above 84 degrees north or below 80 degrees south the entry will be rejected and you will receive an error message, "POSITION IS NOT VALID" "ACK".

M-8.7.13 GPS Control. Used to enhance positioning. The POC will instruct you when to use GPS Control.

**NOTE**

Use according to unit SOP.

a. Select either USE GPS AIDING or USE ONLY CODED GPS DATA.

# M-8 PDFCS FIRE MISSION - CONTINUED

## M-8.7 System Menus - Continued

M-8.7.13 GPS Control - Continued

b. You will receive the following operator prompts.

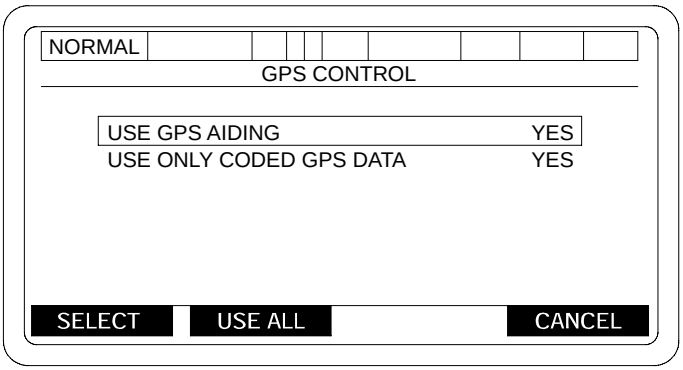


06pc201m

OPERATOR PROMPTS (ON SOFT KEY LINE):

1. WHEN GPS AIDING SELECTED:

USE GPS AIDING? | YES | NO

2. WHEN USE ONLY CODED GPS DATA SELECTED:

USE ONLY CODED GPS? | YES | NO

NOTE: VALUES SHOWN ARE SYSTEM SUPPLIED DEFAULTS.

# M-8 PDFCS FIRE MISSION - CONTINUED

## M-8.7 System Menus - Continued

M-8.7.14 Record of Fire.

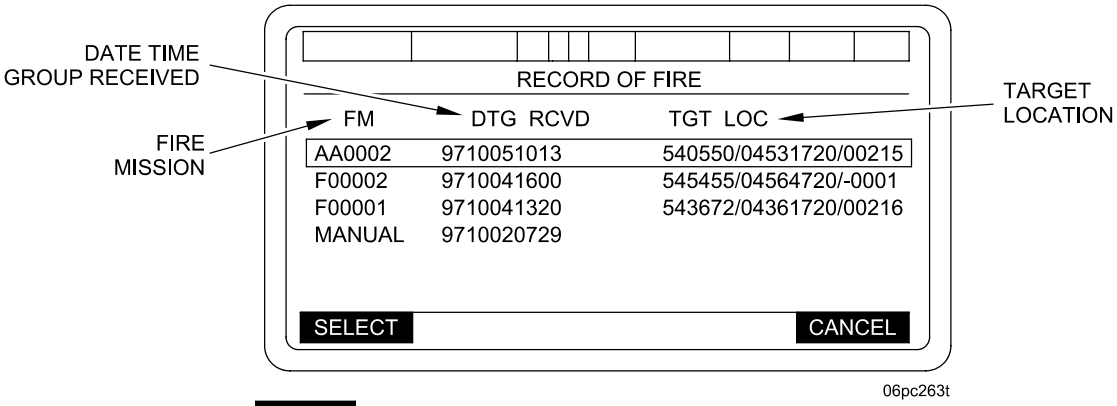


SELECT : View firing data for a particular target

CANCEL : Return to SETUP AND INFORMATION menu

Mission data displayed in order from latest received to earliest

06pc146t

# M-8 PDFCS FIRE MISSION - CONTINUED

## M-8.7 System Menus - Continued

M-8.7.14 Record of Fire - Continued

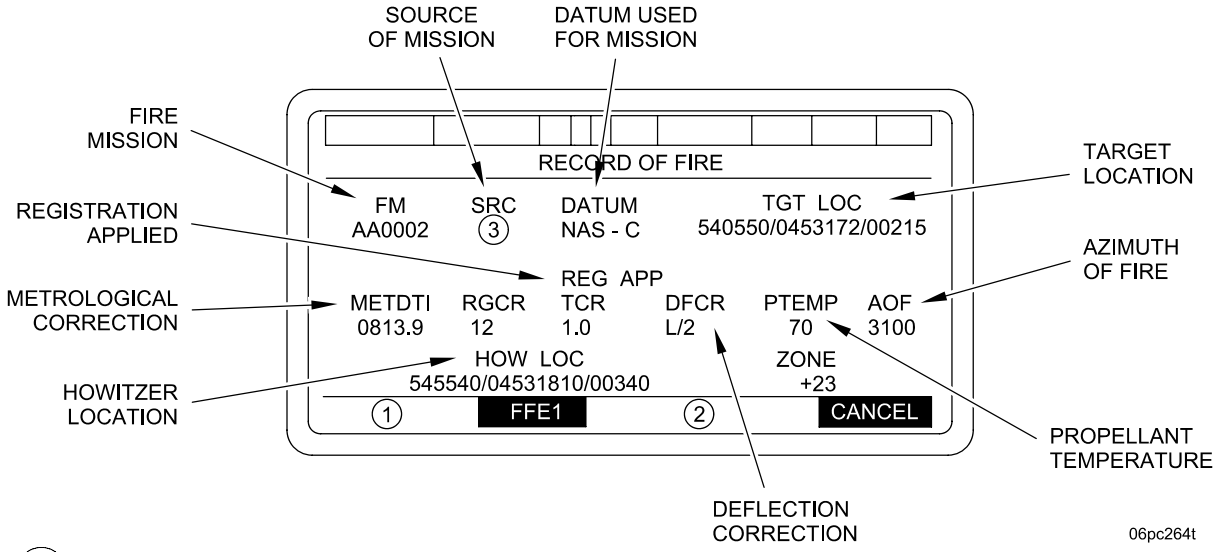


(1) The "ADJ" soft key will be displayed if there is an adjust phase for the mission, otherwise it will be blank.

(2) The "FFE2" soft key will be displayed if there is a second Fire for Effect phase for the mission.

(3) When the mission is received from an FDC, "FDC" will be displayed. If the mission is DIRECT or MANUAL, "OPR" will be displayed. If the mission is received from an Additional Subscriber, then "OTH" will be displayed.

- The "FFE1" soft key will be blank when the fire mission selected is a "MANUAL" or "DIRECT".
- The "FFE1", "FFE2", or "ADJ" soft keys will allow you to view pre-shot data for that phase.
- The "CANCEL" soft key will display the RECORD OF FIRE menu.
- If the fire mission is an FDC computed mission, only the FFE1 soft key will be available.
- The "METDTI" field will show the date-time group from the MET message.
- The following default criteria for FDC computed fire missions shall appear in the RECORD OF FIRE displays.

  MET (CURRENT NVM)
  POWDER TEMPERATURE (CURRENT NVM)
  MVV (-99.9)
  REGISTRATION DATA (ZEROS)
  TARGET LOCATION AND ELEVATION (ZEROS)

# M-8 PDFCS FIRE MISSION - CONTINUED

## M-8.7 System Menus - Continued

M-8.7.14 Record of Fire - Continued

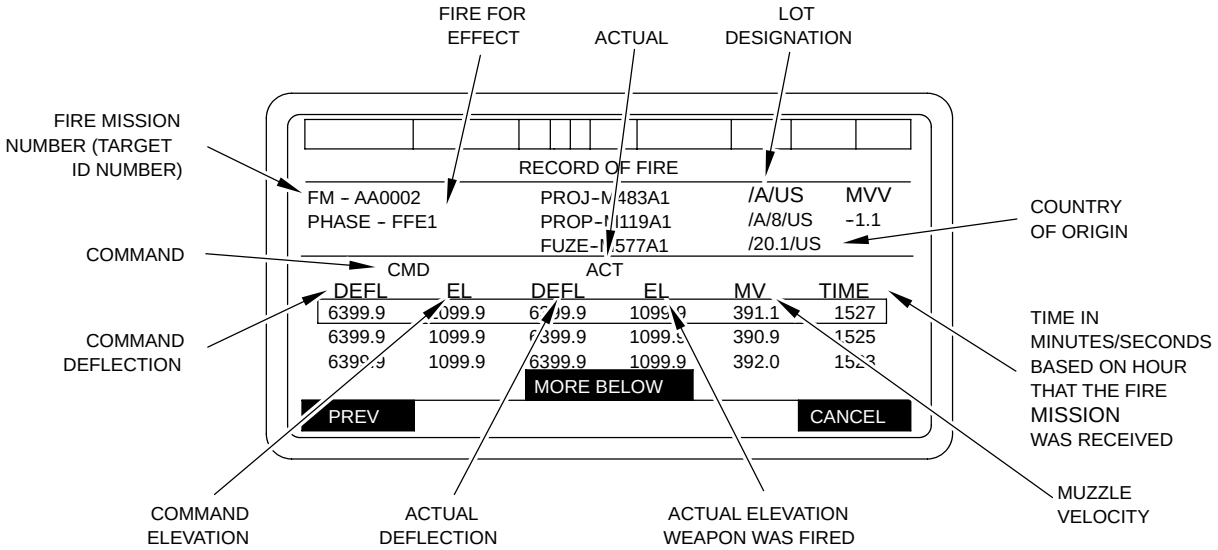


PREV : Returns previous screen for viewing pre-shot data of different phase

CANCEL : Return to RECORD OF FIRE menu

06pc265t

### NOTE

If more than four shots exist for a particular phase, three will initially be displayed and scrolling will be enabled. As the cursor is scrolled below the first three, two will be displayed, MORE ABOVE will appear on top of the shot data, and MORE BELOW will appear below the shot data.

If the fire mission is an FDC computed mission only initial shell and fuze data (eg ADJUST) shall be displayed.

The MVV entry is the total MVV applied to the phase.

# M-8 PDFCS FIRE MISSION - CONTINUED

## M-8.7 System Menus - Continued

M-8.7.14.1 Fire Mission Mode.

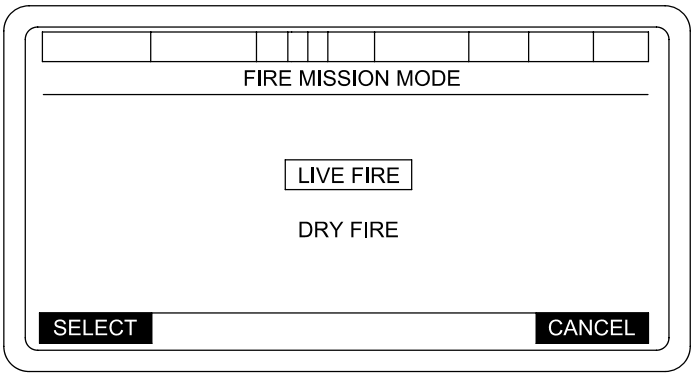


06pc269t

- When “LIVE FIRE” is selected, EFC updates shall be performed upon EOM/Abort Fire Mission Processing.

- When “DRY FIRE” is selected, Muzzle Velocity processing and EFC processing shall not be performed. All other functions are performed as they would be in a normal Live Fire Mode. An operator warning “D” shall be shown in position 4 of the Function Status Field. This warning shall remain in all screens until “LIVE FIRE” is selected.

M-8.7.15 Muzzle Velocity. For more accurate firing data when computing ballistics, measured muzzle velocities are entered into the PDFCS. Also, muzzle velocities can be entered as they are measured. This is performed as followed:

**WARNING**

Ensure that correct propellant temperature and shell weights are entered in PDFCS. Failure to comply will result in incorrect ballistic computations. This could result in injury or death to friendly troops.

# M-8 PDFCS FIRE MISSION - CONTINUED

## M-8.7 System Menus - Continued

M-8.7.15 Muzzle Velocity - Continued

a. Box in MUZZLE VELOCITY on SETUP AND INFORMATION menu and press SELECT key to display a MUZZLE VELOCITY VARIATION screen.

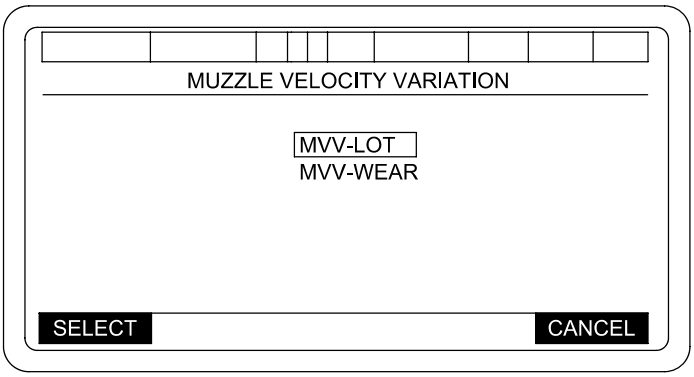


06pc266t

b. To delete muzzle velocities, box in MVV-LOT from the MUZZLE VELOCITY VARIATION screen and press SELECT.

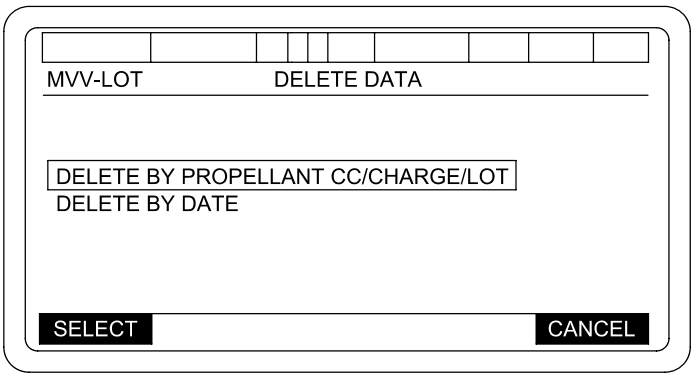


06pc266ta

# M-8 PDFCS FIRE MISSION - CONTINUED

## M-8.7 System Menus - Continued

M-8.7.15 Muzzle Velocity - Continued

c. To delete muzzle velocity by propellant cc/charge/lot, box in DELETE BY PROPELLANT CC/CHARGE/LOT and press SELECT.

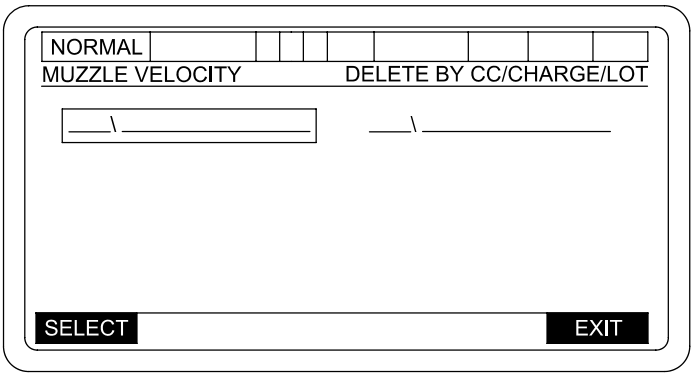


06pc273t

Lots are displayed in ascending ASCII sort sequence by country, manufacturer's propellant lot, and then propellant charge. When SELECT soft key is pressed the short message "DELETE VELOCITY DATA" "YES" "NO" will be displayed. YES causes the MVV Lot data for the selected propellant lot to be deleted from the display. NO allows the re-selection of a propellant lot. While extended lot codes are being retrieved and sorted for display, the following message shall be displayed:

"RETRIEVING LIST PLEASE WAIT"

If no lots are available for deletion, the SELECT key will be blanked, you will have a CANCEL at soft key 4 and the message "NO LOTS TO DELETE" will be displayed.

If there is more than one page of entries in the MVV-Lot database you will have a "NEXT PAGE" at soft key 2 and "PREVIOUS PAGE" at soft key 3. If the first page of entries is displayed, the "PREVIOUS PAGE" soft key will be blanked. If the last page of entries is displayed, the "NEXT PAGE" soft key will be blanked.

EXIT replaces the CANCEL soft key once a lot has been deleted. When the "EXIT" soft key is pressed, the message "PERM DELETE LOTS" "YES" "NO" shall be displayed. If YES is selected, the propellant lots will be deleted from the MVV-Lot Database. If NO is selected, propellant lots shall not be deleted from the MVV-Lot Database.

# M-8 PDFCS FIRE MISSION - CONTINUED

## M-8.7 System Menus - Continued

M-8.7.15 Muzzle Velocity - Continued

d. To delete muzzle velocity by the date box in DELETE BY DATE and press SELECT.

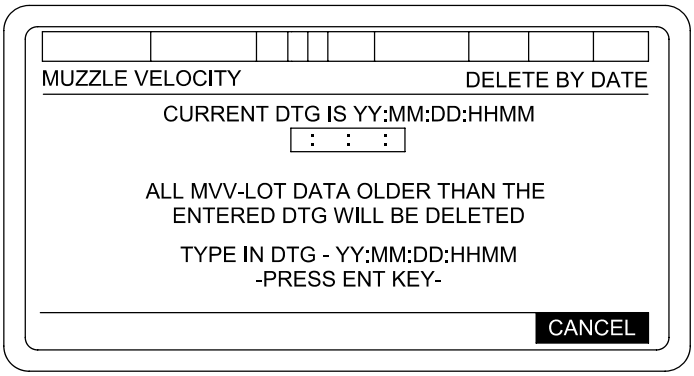


06pc267t

When ENT key is pressed, a validity check is performed on the entered date/time. If the date/time is invalid, you will receive a short error message: "INVALID DTG VALUE" "ACK". You will be required to enter a new Date/Time value. If the date/time data is valid, a short message "DELETE MVV" "YES" "NO". YES causes all MVV Lot data older than the entered DTG to be deleted. NO allows re-entry of the DTG.

e. To update MUZZLE VELOCITY VARIATION tube wear information, box in MVV-WEAR from the MUZZLE VELOCITY VARIATION screen and press SELECT.

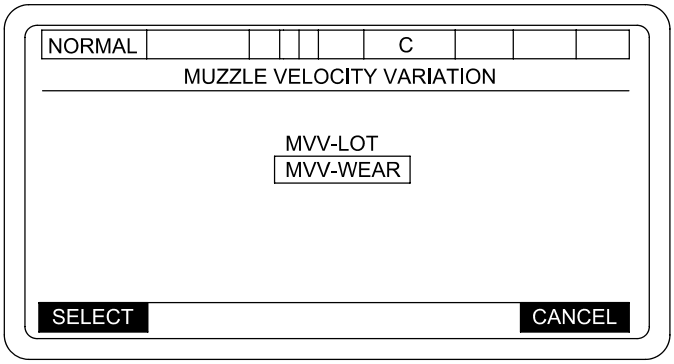


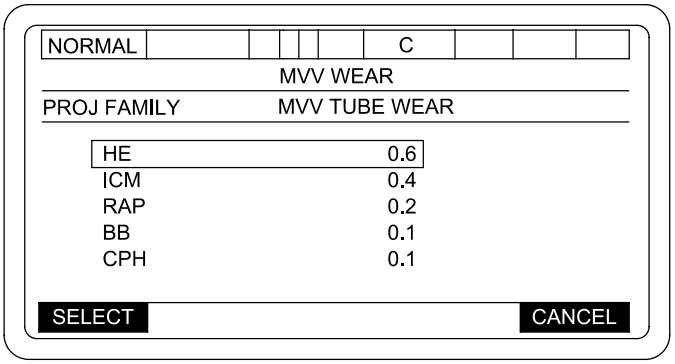


06pc267ta

When an entry has been selected the "+/-" will be displayed at soft key 2. The phrase "ENTER A VALUE BETWEEN -49.9 AND +49.9" and "PRESS ENT KEY" will be displayed. If the value is greater than +/- 49.9 you will receive a short error message: "VALUE TOO BIG" "ACK" or "VALUE TOO SMALL" "ACK". The value will be returned to the previous value displayed and allow re-entry. When you have updated an entry with a different value, "UPDATE" will be displayed at soft key 2. Press "UPDATE". This will update the MVV-Wear database and return to the MUZZLE VELOCITY VARIATION screen.

# M-8 PDFCS FIRE MISSION - CONTINUED

## M-8.7 System Menus - Continued

M-8.7.16 Operational Maintenance Transition.

The PDFCS will provide the capability for the PDFCS operator to transition from NORMAL OPERATIONAL MODE functions to MAINTENANCE MODE functions and back to NORMAL OPERATIONAL MODE without having to POWER DOWN, perform SYSTEM RESTART, or perform NORMAL OPERATIONAL MODE initialization procedures. This capability will only be available when the PDFCS has successfully completed a NORMAL OPERATIONAL MODE initialization. Selection of the MAINTENANCE MODE from the PDFCS MODE SELECTION display will not allow the PDFCS operator to transition to NORMAL OPERATIONAL MODE without first having to POWER DOWN, perform SYSTEM RESTART, or do a NORMAL OPERATIONAL MODE "INITIALIZATION" procedure.

When MAINTENANCE MODE functions are selected from the PDFCS NORMAL OPERATIONAL MODE, the PDCU will be directed to limit instructive testing to only respond to Fire Mission requests. When MAINTENANCE MODE is entered from the PDFCS SELECT OPERATIONAL MODE display, the PDCU will be allowed to perform its full range of intrusive tests.

If a Fire Mission is received while the PDFCS is in a MAINTENANCE MODE function which was activated from the NORMAL OPERATIONAL MODE, the operator will be prompted to either accept or reject the mission. NORMAL OPERATIONAL acceptance of the mission will automatically terminate all MAINTENANCE MODE function activity and transition to NORMAL OPERATIONAL MODE Fire Mission processing. Operator rejection of the mission will cause an operator ABORT of the Fire Mission and will cause the PDFCS to remain in the currently active MAINTENANCE MODE function.

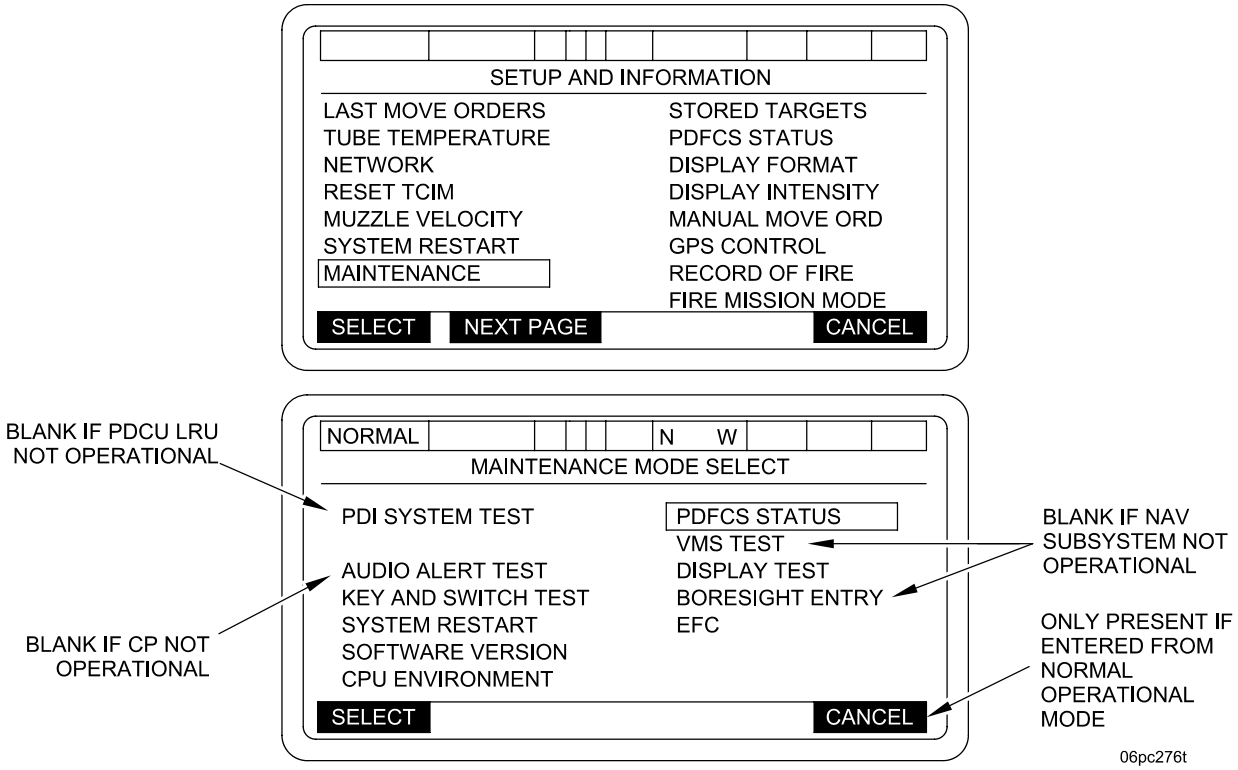

# M-9 PDFCS AND PDI FAULT DETECTION.

## M-9.1 Power Up Built-In-Test (BIT).

The BIT is a self-test of the PDFCS. This test occurs when the vehicle MASTER power is ON and the PDFCS POWER switch (located on the PDU), is placed to ON. By placing the PDFCS POWER switch and PCU-2 circuit breakers to ON, the PDU will display the screen shown.

As each of the six subsystems is tested, the - will change and provide a subsystem condition. An OK condition (see illustration below), indicates a subsystem is 100% functional.

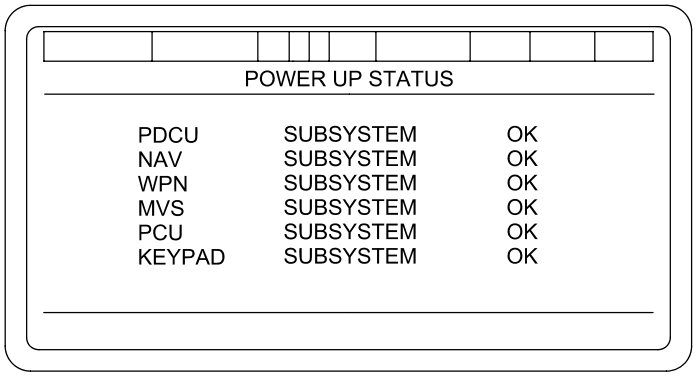


06pc076mc

**NOTE**

If PDU contains an incorrect configuration, the PDFCS will not allow the operator to select normal operations until a correct PDU software configuration is downloaded.

When configuration verification checking indicates that the executed software configuration is not the same as the acquired software configuration, a short error message “INVALID SOFTWARE CONFIGURATION”, “ACK” will appear on the sofkey label line of the PDU.

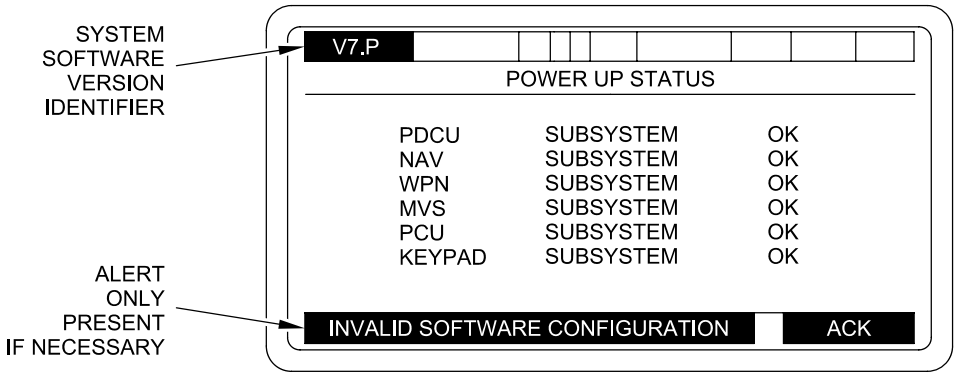


06pc279t

When the message is acknowledged, the PDFCS will proceed to the “SELECT OPERATIONAL MODE” menu. To view detailed software configuration information for each LRU, MAINTENANCE should be selected, IAW procedure in para M-9.2.

# M-9 PDFCS AND PDI FAULT DETECTION - CONTINUED

## M-9.1 Power Up Built-In-Test (BIT) - Continued

The display shown in the example below illustrates two conditions, DEGRADED and OUT.

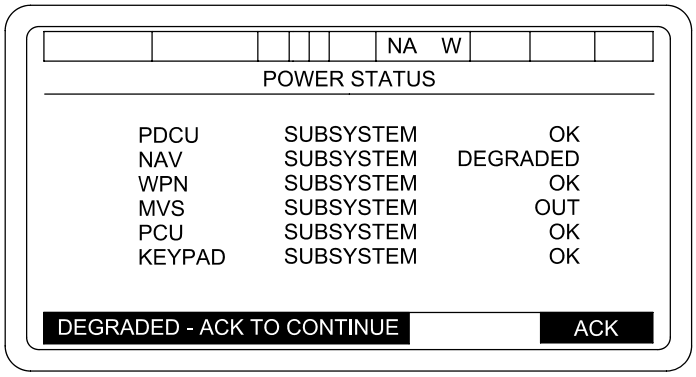


06pc077md

The DEGRADED condition indicates a subsystem is not 100% functional. When a degraded condition exists, it will be indicated in field 7 by one or a combination of these letters with the following meaning:

N - Navigation
A - GPS Aiding
C - Communication Processing
W - Weapon Controller

# M-9 PDFCS AND PDI FAULT DETECTION - CONTINUED

## M-9.1 Power Up Built-In-Test (BIT) - Continued

These two conditions, OUT and DGRD, will be tested to determine where the fault exists and the extent of the fault. After a fault has been detected (OUT or DGRD condition during self-test) press the illuminated soft key beneath the word ACK. After pressing the ACK key, the screen shown below will be displayed.

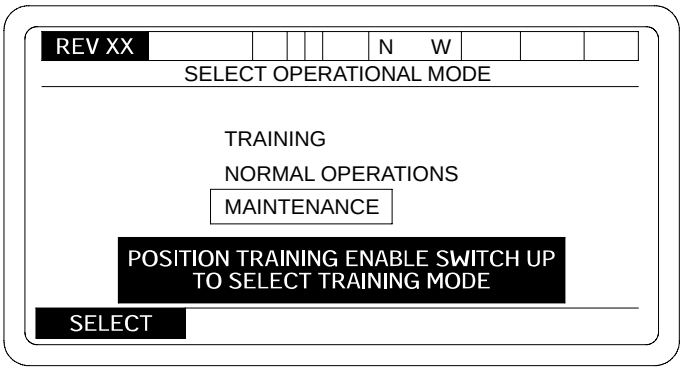


hipc4198

The display above depicts three modes: TRAINING, NORMAL OPERATION and MAINTENANCE. To select MAINTENANCE MODE, box in MAINTENANCE as shown in the illustration above. Press illuminated soft key beneath the word SELECT to enter maintenance mode master menu.

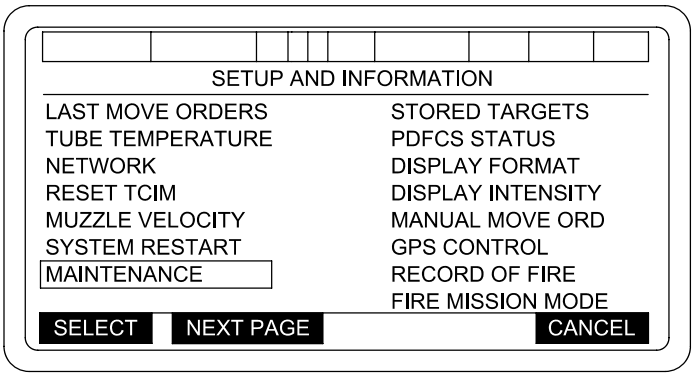


06pc276ta

The PDFCS also provides the capability for the PDFCS operator to transition from Normal Operational Mode functions to Maintenance Mode functions and back to Normal Operational Mode without having to perform a power down sequence, system restart, or Normal Operational Mode initialization procedures. This capability shall only be available when the PDFCS has successfully completed a Normal Operational Mode initialization. Selection of the Maintenance Mode from the PDFCS Mode Selection display shall not allow the PDFCS operator to transition to Normal Operational Mode without first performing either a power down sequence or a system restart.

When Maintenance Mode functions are selected from the PDFCS Operational Mode, the PDI shall be directed to limit intrusive testing to only those tests which will not impact the ability of the PDFCS to quickly respond to fire mission requests. When Maintenance Mode is entered from the PDFCS Mode Selection display, the PDI shall be allowed to perform its full range of intrusive tests.

# M-9 PDFCS AND PDI FAULT DETECTION - CONTINUED

## M-9.1 Power Up Built-In-Test (BIT) - Continued

If a fire mission is received while the PDFCS is in a Maintenance Mode function which was activated from the Operational Mode, the operator shall be prompted to either accept or reject the mission. Operator acceptance of the mission shall automatically terminate all Maintenance Mode function activity and transition to Normal Operational Mode fire mission processing. Operator rejection of the mission shall cause an operator abort of the fire mission and shall cause the PDFCS to remain in the currently active Maintenance Mode function.

## M-9.2 PDFCS Status.

To display the PDFCS STATUS menu:

a. Select MAINTENANCE from the SETUP AND INFORMATION menu. Press SELECT key. This will cause the MAINTENANCE MODE SELECT menu to be displayed.

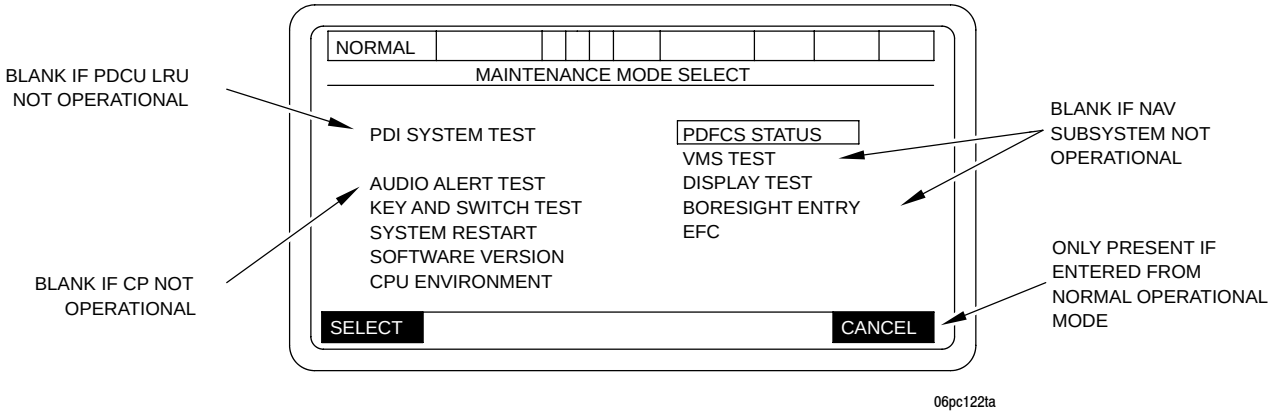


If MAINTENANCE is selected from NORMAL OPERATIONAL MODE, the MAINTENANCE screen will display “SELECT” and “CANCEL” options above soft keys 1 and 4 in field 16.

b. Select PDFCS STATUS from the MAINTENANCE MODE SELECT menu. Press SELECT key. This will cause the PDFCS STATUS menu to be displayed.

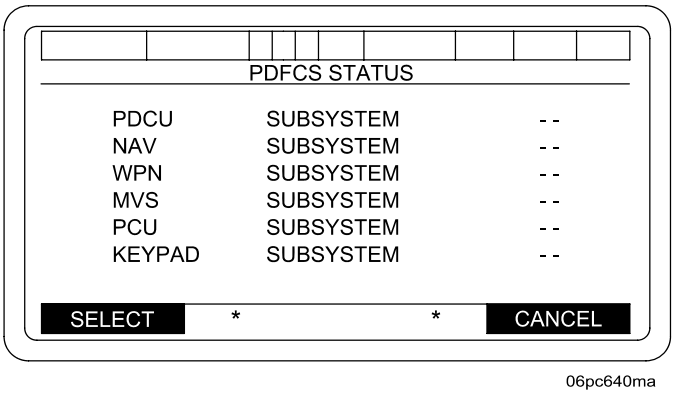


The PDFCS STATUS menu will display the various subsystem faults. Using this fault list (showing Degraded Mode of each subsystem), you will be able to determine if Degraded Mode is acceptable depending on mission requirements.

# M-9 PDFCS AND PDI FAULT DETECTION - CONTINUED

## M-9.2 PDFCS Status - Continued

Certain degraded subsystems will not interfere with PDFCS operation or mission capability. It is important to know, however, which subsystem is degraded (and which BIT item has failed). Knowing which failure to compensate for/correct will allow you to carry on with your mission. The various LRUs communicate/send messages periodically within PDFCS. Whenever an LRU has not sent a message within a certain amount of time, the LRU timer sends an LRU FAILED message. In the event you get an LRU FAILED message, go into MAINTENANCE menu, check PDFCS STATUS. If LRU failed, notify unit maintenance.

The PDFCS STATUS menu is used by unit maintenance personnel, as well as by the operator. The operator must notify unit maintenance of any subsystem listed with a status of DEGRADED or OUT, then no faults within that subsystem are indicated. Look at each subsystem carefully.

Select the subsystem in question. Further information will be displayed to help determine where the fault lies.

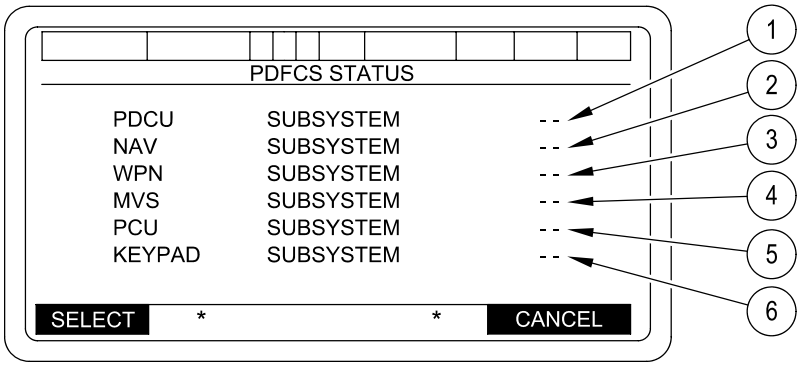


(1) = (OK, DEGRADED, OUT)

(2) = (OK, DEGRADED, OUT)

(3) = (OK, DEGRADED, OUT)

(4) = (OK, OUT, - -) Where - - indicates that the PDFCS could not connect to the MVS

(5) = (OK, DEGRADED, - -) Where - - indicates PDCU failure that prevents PCU status from being determined

(6) = (OK, DEGRADED, - -) Where - - indicates PDCU failure that prevents KEYPAD status from being determined

SELECT = SELECT A SUBSYSTEM

CANCEL = CANCEL and return to SETUP AND INFORMATION menu or INTERNAL MAINTENANCE menu

* = No test appears for these softkeys. Pressing FUNCTION KEY 2 or 3 will clear ET SIMULATED FAILURES

06pc641ma

# M-9 PDFCS AND PDI FAULT DETECTION - CONTINUED

## M-9.2 PDFCS Status - Continued

M-9.2.1 PDCU SUBSYSTEM STATUS Display.

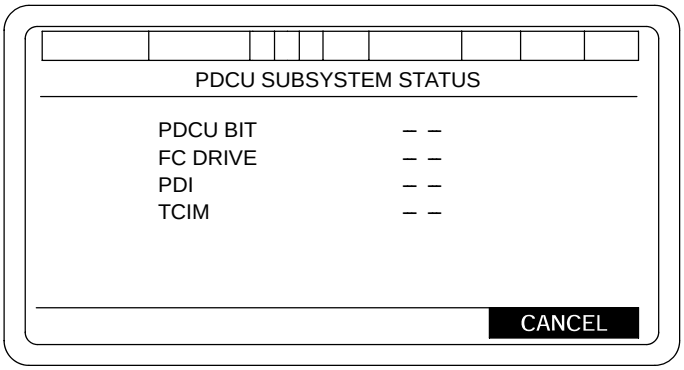


– – = (OK, FAIL)

CANCEL = Return to the PDFCS STATUS display

06pc642m

M-9.2.2 NAV SUBSYSTEM STATUS Display.

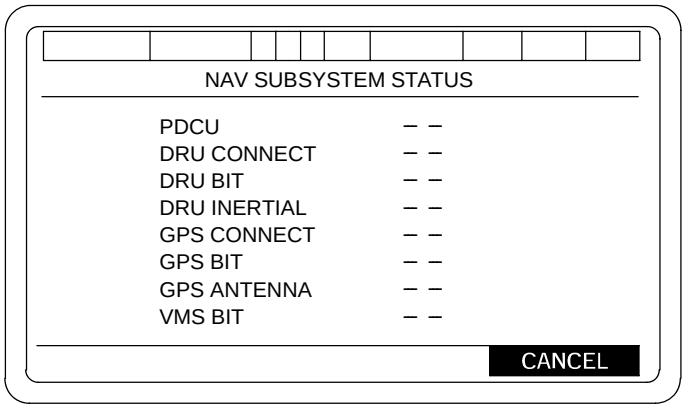


– – = (OK, FAIL)

CANCEL = Return to the PDFCS STATUS display

06pc643m

# M-9 PDFCS AND PDI FAULT DETECTION - CONTINUED

## M-9.2 PDFCS Status - Continued

M-9.2.3 WPN SUBSYSTEM STATUS Display.

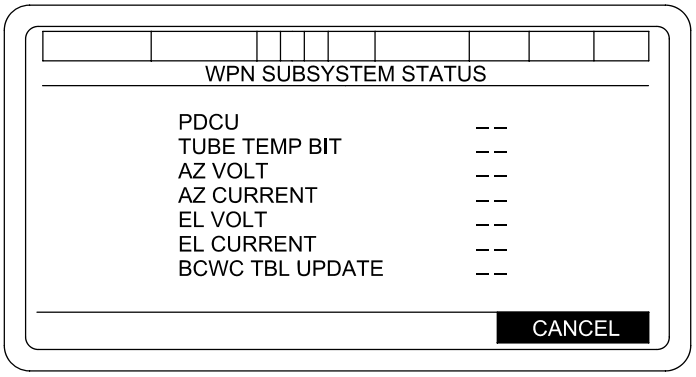


_ _ = (OK, FAIL)

CANCEL = Return to the PDFCS STATUS display

06pc644ma

M-9.2.4 MVS SUBSYSTEM STATUS Display.

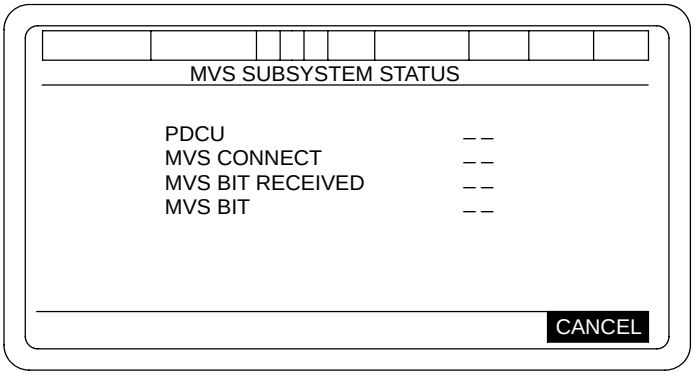


_ _ = (OK, FAIL)

CANCEL = Return to the PDFCS STATUS display
= Press CANCEL twice,
returns to MAINTENANCE MODE SELECT
display

06pc645m

# M-9 PDFCS AND PDI FAULT DETECTION - CONTINUED

## M-9.3 PDI System Test.

Ensure NAV alignment is complete prior to performing PDI system test.

To start the PDI SYSTEM TEST, move the cursor with the arrow keys until the PDI SYSTEM TEST is boxed, as shown below.

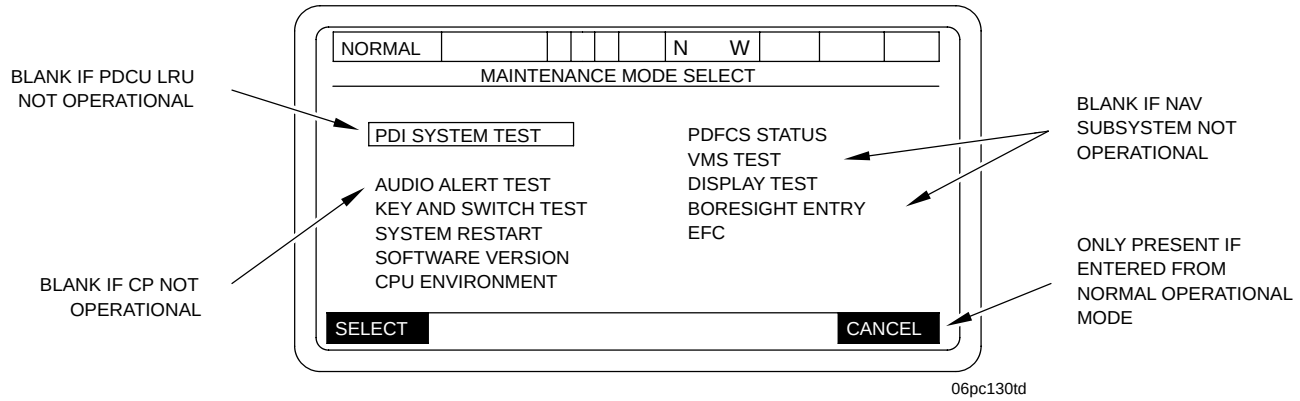


Press SELECT. The screen will display the prompt “ARE YOU SURE,” YES OR NO. Press “YES”. The screen will display the following message:

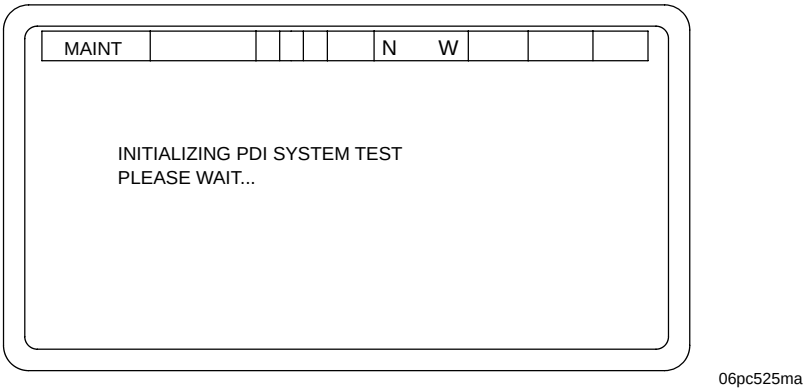


This message requires no action on your part. In 3 to 5 seconds, when the system is ready, it will be replaced with a menu display like the following:

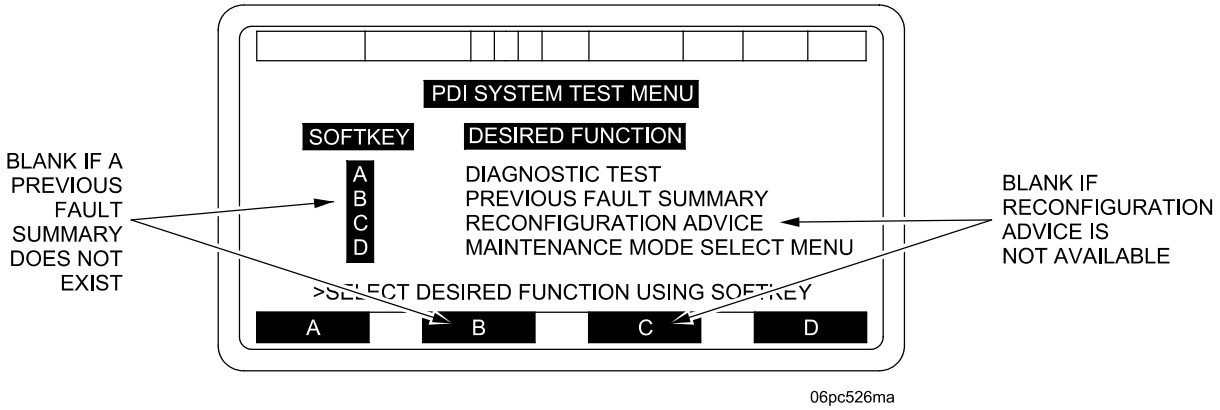


This menu allows you to select whichever function you wish to perform.

# M-9 PDFCS AND PDI FAULT DETECTION - CONTINUED

## M-9.3 PDI System Test - Continued

**NOTE**

The previous Fault Summary and Reconfiguration Advice functions are not always available. These options will not be displayed if their functions cannot be performed. (The different menu screens that can be seen because of this are shown at the end of the description.)

Each of the four functions will now be described separately.

DIAGNOSTIC TEST

To perform DIAGNOSTIC TEST, press the “A” softkey.

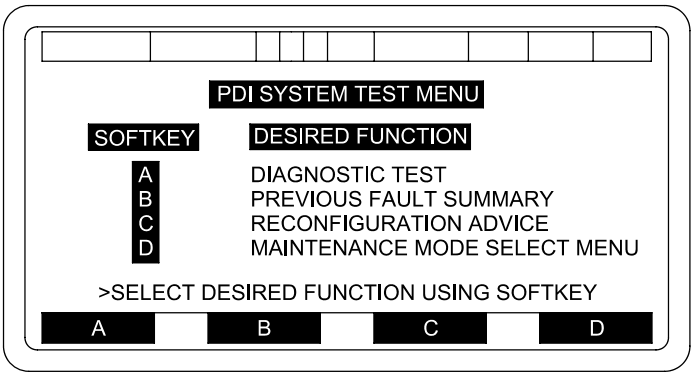


06pc527mb

The next screen allows you to select which part of the system you would like to test based upon the problem you are troubleshooting. The Gun Positioning System will not be available until the hydraulics segment has been successfully tested (the PDI should not be reset). To test the entire system, all four segments should be tested in the order they appear on the screen. As each segment passes its test, the next segment should be selected from this screen without resetting the system. If any of the segmented tests fail, the fault should be corrected, the PDFCS should be reset and the testing should begin again with the first test. Continuing testing without resetting the system can result in false failures.

To perform any of the segment tests select “YES” when that segment appears behind “CHOOSE OPTION”.

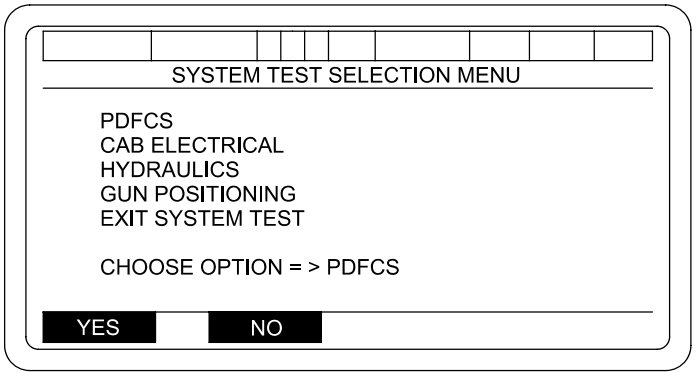


06pc377mc

# M-9 PDFCS AND PDI FAULT DETECTION - CONTINUED

## M-9.3 PDI System Test - Continued

The following screen will be displayed.

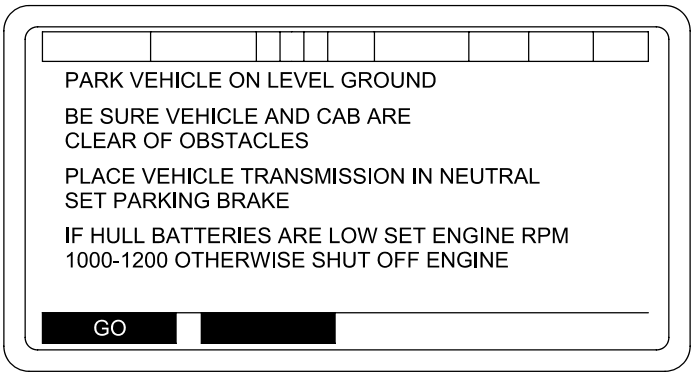


06pc378ma

When you have completed the required actions, press GO softkey and testing will continue.

During the next few screens, you will be given the CANCEL softkey option. CANCEL is there in case you selected the DIAGNOSTIC TEST function (from the menu) by mistake or in case you changed your mind. When you press CANCEL, the system will display the PDI SYSTEM TEST MENU again.

Throughout diagnostic testing, you will be given instructions. When you press GO, you are telling the system that you have done the task it asked for. It is important that you complete the task before pressing GO because many of the decisions that the system makes are based on the actions that you made. A typical instruction is shown below:

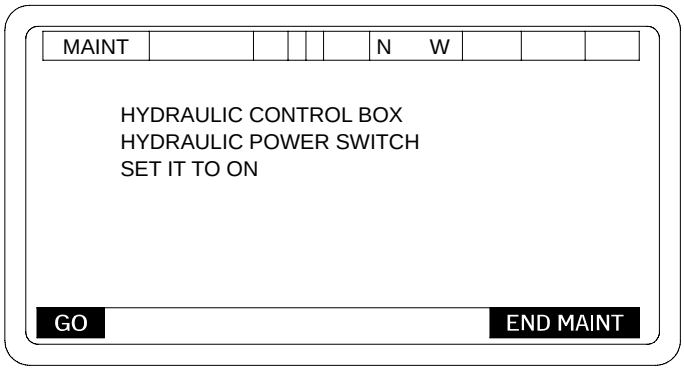


06pc411m

When you are instructed to perform an action such as the screen below, the PDI measures the voltage of the switch.

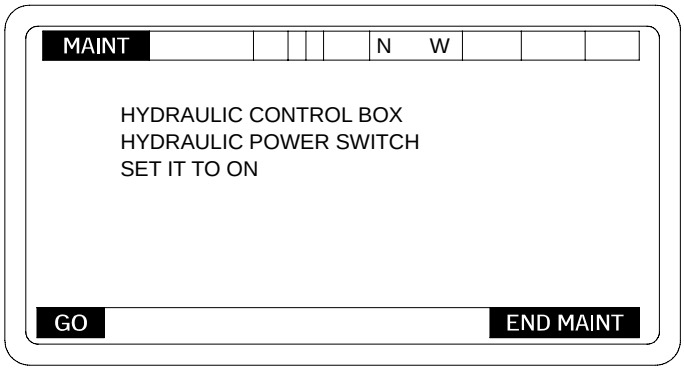


06pc408m

# M-9 PDFCS AND PDI FAULT DETECTION - CONTINUED

## M-9.3 PDI System Test - Continued

If the result is not correct, then you are asked if you performed the action correctly, as shown in the screen below.

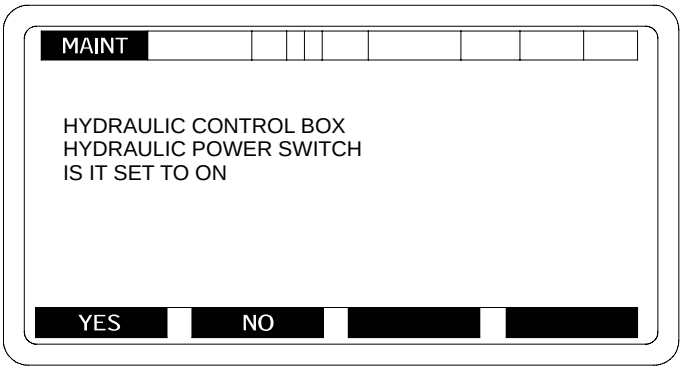


06pc409m

If you answer “YES”, a fault will be detected by the PDI. If you answer “NO”, you will be given another chance to perform the action correctly. Then, if the action is not performed correctly, a fault will be detected by the PDI.

Most of the displays in the main section of the DIAGNOSTIC TEST will include an END MAINT softkey at the bottom of the display. When this is present, you have the option of stopping the test at that point. If you press END MAINT, testing will immediately stop and you will see the Fault Summary display with all of the test results up to where you stopped. This feature is provided to allow you to return to normal operations with a minimum of delay if necessary. REMEMBER - When you press END MAINT, the system can only report the results of the test up to where you stopped. There may be further faults not detected.

During diagnostic testing, you will also be asked to answer questions. A typical question is shown below:

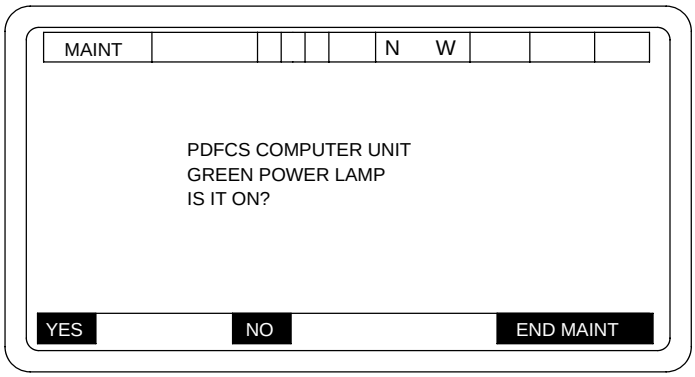


06pc407mb

Questions will always be asked so that a YES or NO answer is possible by pressing the YES or NO softkeys. The system is using your ability to see, feel and hear to get the information it needs. It uses your answers to make decisions about functions that cannot be measured directly by the PDI.

# M-9 PDFCS AND PDI FAULT DETECTION - CONTINUED

## M-9.3 PDI System Test - Continued

Several times during diagnostic testing, you will see messages that start with the words “TEST IN PROGRESS” like the following screen:

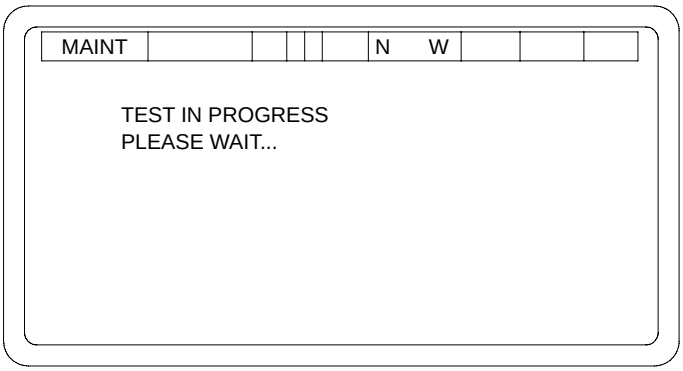


06pc59

These screens have no labels for the softkeys at the bottom of the screen and require no response. They are intended to let you know that the system has recognized your last response and is busy with a long test operation. When it is ready to continue, the display will automatically change to a question or instruction message.

If you are troubleshooting a hydraulics or weapon positioning problem or performing a full system checkout, you should press the YES softkey. The system will then begin a new sequence of instructions and questions. Most faults will be isolated as far as possible by the PDI during the normal sequence of DIAGNOSTIC TEST. Usually, the test sequence will run to completion and display the Fault Summary screen. However, some faults can be isolated further. This requires extra testing which can involve disconnecting cables and opening the hydraulic compartment. When one of these faults is detected, the system will remember it until it has finished all of the fault detection tests. It will then display a special menu screen like the following:

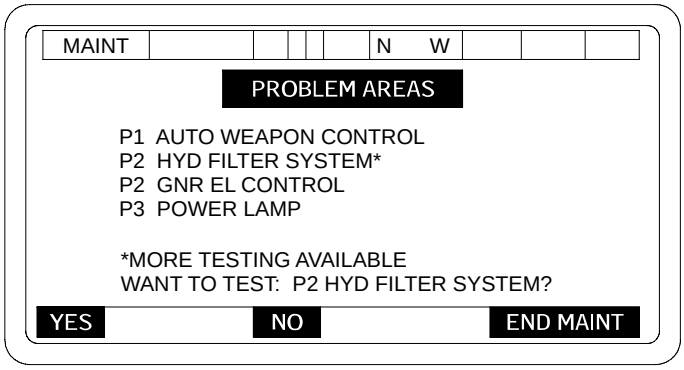


hipc4146

Each of the problem areas that requires extra testing will be displayed with an asterisk (*). The question line at the bottom will have the same name of the first extra test problem area. You can choose to continue testing this problem area by pressing YES. If you press NO, the name of the next extra test problem area will appear. As long as you continue to press NO, the names of the * problem areas will appear in the question, one at a time. If you decide not to do any of the extra testing, press END MAINT and the system will immediately display the Fault Summary.

# M-9 PDFCS AND PDI FAULT DETECTION - CONTINUED

## M-9.3 PDI System Test - Continued

If you press the YES softkey for one of the problem areas, testing will continue with instructions and questions until the fault has been isolated as far as possible by the PDI. When the extra testing is complete, you will see a screen like the following:

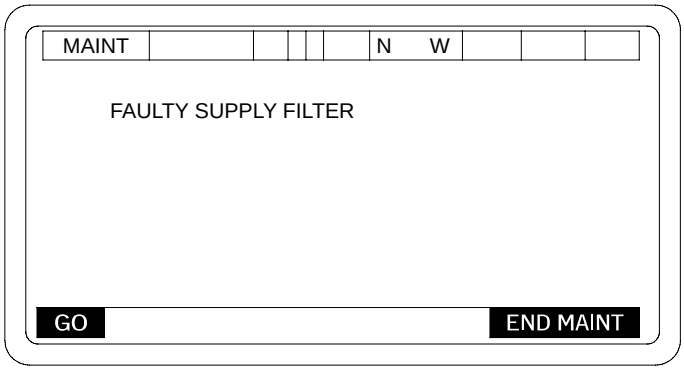


hipc4147

This screen may show one faulty LRU or a short list of possible faulty LRUs that must be isolated further by manual troubleshooting procedures. It tells you that the PDI has done all of the testing it can. When you press GO, the Fault Summary screens will begin.

The first screen of the Fault Summary sequence will be definition of the Fault Priority Codes assigned to each fault message.

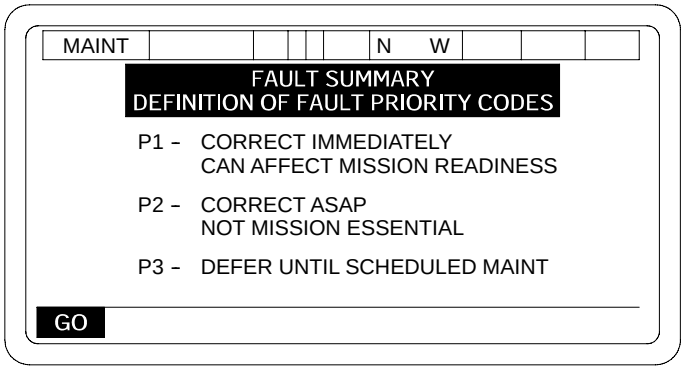


hipc4148

P1 - These faults require immediate attention. You have lost or may soon lose a major system function that may affect your mission capabilities.

P2 - These faults do not immediately affect your mission readiness but should be corrected as soon as possible.

P3 - These faults can be deferred until a scheduled maintenance period.

# M-9 PDFCS AND PDI FAULT DETECTION - CONTINUED

## M-9.3 PDI System Test - Continued

The fault definition screen is followed by a Fault Summary list like the one shown on the next screen.

**NOTE**

All of the information in the Fault Summary screens should be reported to Unit Maintenance. It is a good idea to copy the list of problems and possible faults before pressing GO. If you forget or don't have time to copy all the information now, it can be redisplayed by selecting the Previous Fault Summary option in the PDI SYSTEM TEST MENU screen the next time it is displayed, even if power has been removed.

Press the GO softkey to continue.

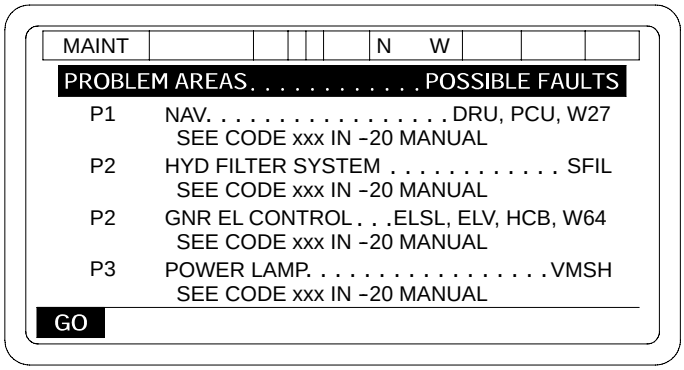


hipc4149

The Fault Summary screens are a list of all of the problems found during screen DIAGNOSTIC TEST. When no problems have been detected, this will simply say "NO FAULTS FOUND" and the Definition of Fault Priority Codes screen will not be shown. However, when problems have been detected, a list like the one above will appear.

When the Fault Summary displays problem areas, it also displays a list of possible faulty LRUs for each problem area and a -20 manual code number. When only one LRU is listed for a problem area, DIAGNOSTIC TEST has determined that the LRU is definitely faulty and must be replaced. When more than one LRU (separated by commas) is listed as a possible fault for a problem area, further isolation by Unit Maintenance is required to determine which one of the LRUs listed is faulty.

The code number (xxx) listed in the "SEE CODE XXX IN -20 MANUAL" message is a reference to an index in the -20 manual which lists the page where the correct manual troubleshooting procedure can be found.

# M-9 PDFCS AND PDI FAULT DETECTION - CONTINUED

## M-9.3 PDI System Test - Continued

The Fault Summary list can take up to three screens. When you have finished viewing or copying the information on each Fault Summary screen, press GO to continue. If more faults were detected, the next Fault Summary screen will be displayed. Some faults may not appear due to limited space on the screens. After corrective actions have been accomplished, the test should be re-run to ensure no additional faults are detected. If Reconfiguration Advice is available for the detected faults, you will be asked the following question:

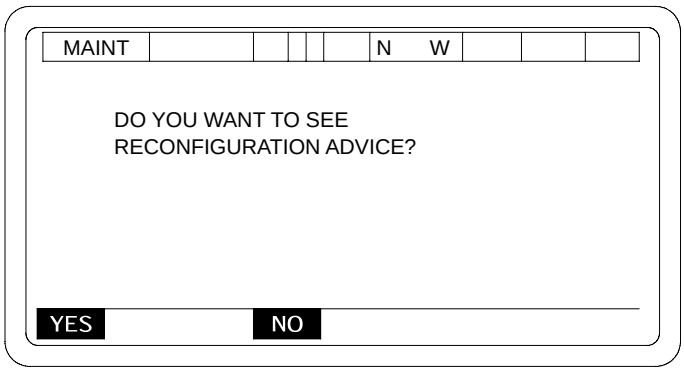


hipc4150

This screen offers you the chance to get further information on what backup modes of operation are available for subsystems that are not operational. If you press YES, a screen like the following will appear:

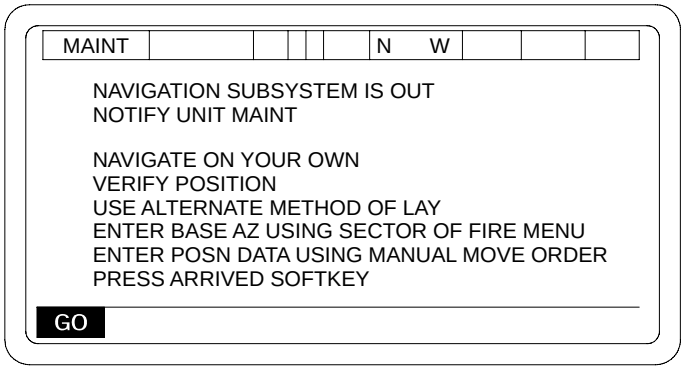


hipc4151

# M-9 PDFCS AND PDI FAULT DETECTION - CONTINUED

## M-9.3 PDI System Test - Continued

Reconfiguration Advice may take more than one screen depending on which (and how many) subsystems are not operational. After you have read each screen, press the GO softkey to continue.

After all Reconfiguration Advice messages have been read, you will be given two screens of instructions that will return the vehicle to a given state. At this point, testing is complete. When you press the final GO, the screen will display the PDIU SYSTEM TEST MENU again.

General Notes About DIAGNOSTIC TEST

The sequence of messages and displays that you see during DIAGNOSTIC TEST will vary depending on the number of faults present in the vehicle. The system will choose its own path through the tests and guide you with instructions. Don't be concerned if you see messages and questions you haven't seen before. The system is simply troubleshooting a fault you haven't had before.

PREVIOUS FAULT SUMMARY

To view the PREVIOUS FAULT SUMMARY, press the B softkey.

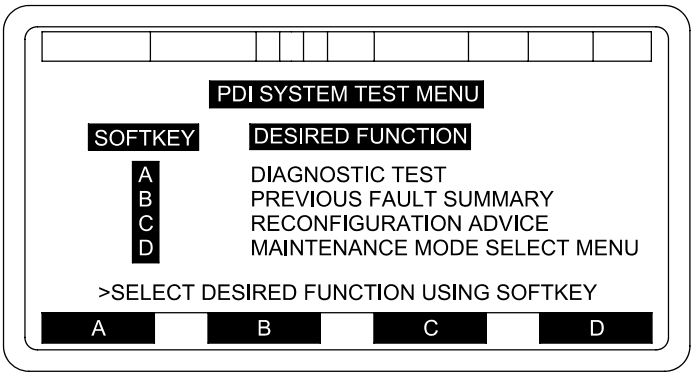


06pc527mb

The PREVIOUS FAULT SUMMARY is a list of all the problems found during the last DIAGNOSTIC TEST performed. If no problems were detected, the following message will be displayed:

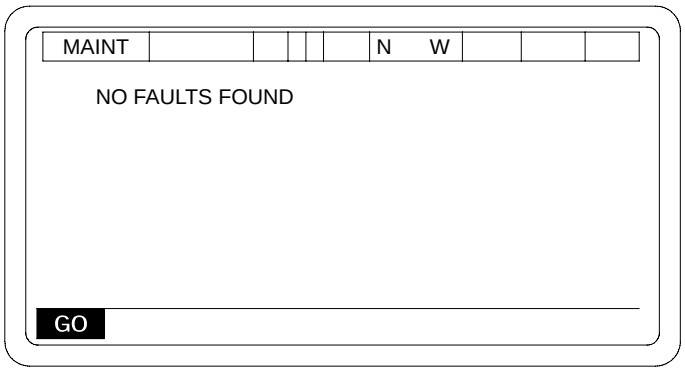


06pc4152

# M-9 PDFCS AND PDI FAULT DETECTION - CONTINUED

## M-9.3 PDI System Test - Continued

If the last DIAGNOSTIC TEST was aborted before completion, you will also see the following message:

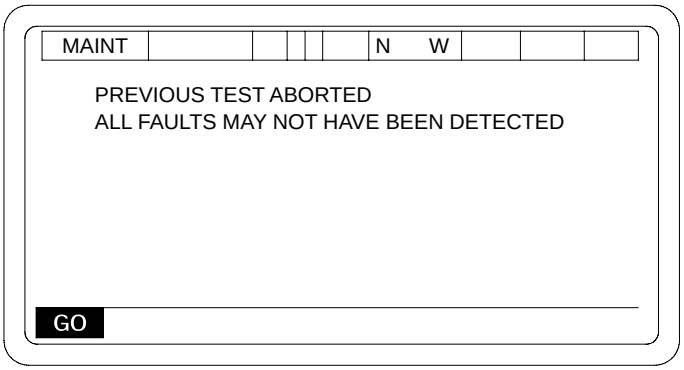


hipc4153

When all screens in the Previous Fault Summary display sequence have been viewed, the PDIU SYSTEM TEST MENU will automatically be displayed again.

RECONFIGURATION ADVICE

To view Background Monitoring Mode RECONFIGURATION ADVICE, press the C softkey.

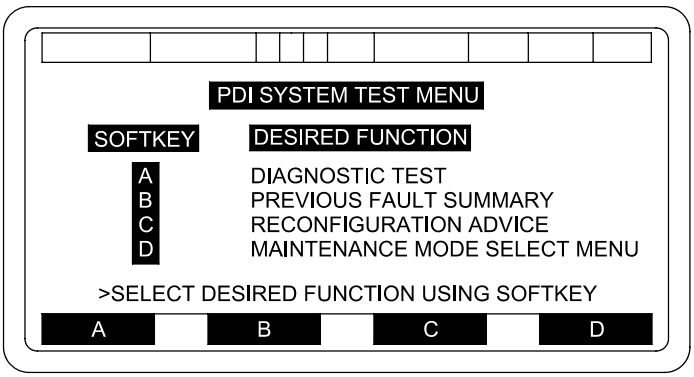


06pc527mb

A screen like the following will be displayed:

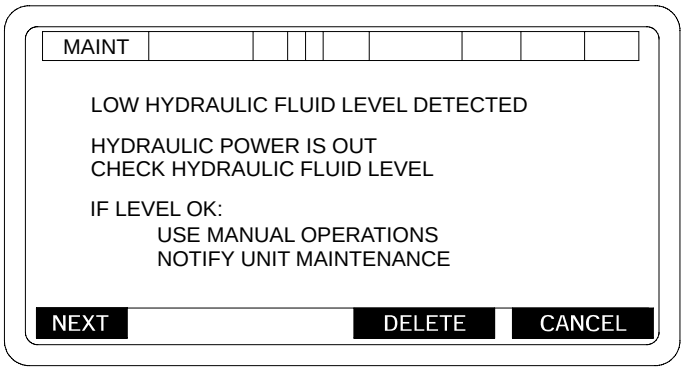


hipc4154

# M-9 PDFCS AND PDI FAULT DETECTION - CONTINUED

## M-9.3 PDI System Test - Continued

RECONFIGURATION ADVICE offers you the opportunity to get more information on what Backup Modes of Operation are available for subsystems that are not operational. This information is displayed for each warning message sent to the PDCU during Normal Operations. RECONFIGURATION ADVICE can take several screens to display as each warning message/advisory information is displayed on a separate screen. You can cycle through and delete the messages as desired.

If you press NEXT, the next warning message and its advisory information will be displayed. If you press DELETE, the warning message and its advisory information displayed will be deleted and the next warning message will appear.

Throughout RECONFIGURATION ADVICE, the CANCEL softkey is available to you. If you press CANCEL, you will exit from RECONFIGURATION ADVICE and the PDI SYSTEM TEST MENU will be displayed again.

After all messages have been viewed, the following display will appear:

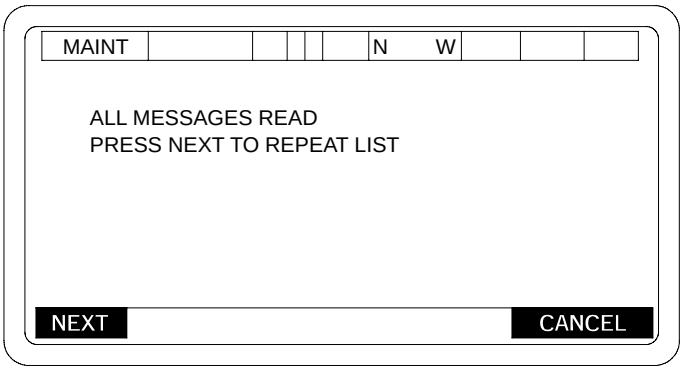


hipc4155

You can press NEXT to cycle through all the messages which were not deleted. Or press CANCEL to exit.

When the last message is displayed and there are no more messages to view, a display like the following will appear:

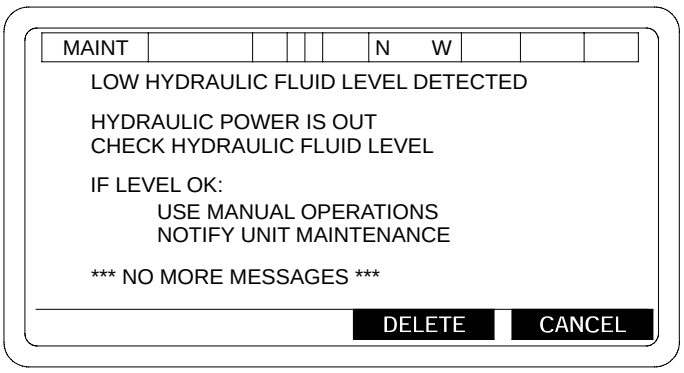


hipc4156

If you press DELETE, the warning message and its advisory information will be deleted and the PDI SYSTEM TEST MENU will be displayed again.

# M-9 PDFCS AND PDI FAULT DETECTION - CONTINUED

## M-9.3 PDI System Test - Continued

MAINTENANCE MODE SELECT MENU

To exit from PDI SYSTEM TEST, press the D softkey.

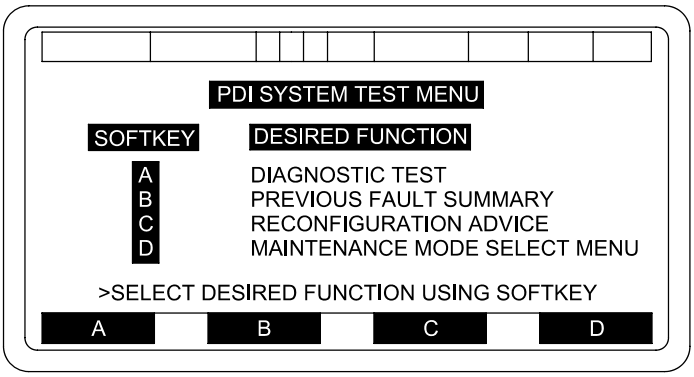


06pc527mb

Pressing D will terminate PDI SYSTEM TEST and the MAINTENANCE MODE SELECT menu screen will appear. The PDI will automatically enter into its Background Monitoring Mode.

PDI SYSTEM TEST MENU VARIATIONS

The following screens show all of the different menus that can be displayed when entering the PDI SYSTEM TEST. As mentioned above, all options are not always available. An option will not be displayed if its function cannot be performed.

In the following screen, all options are available to the user.

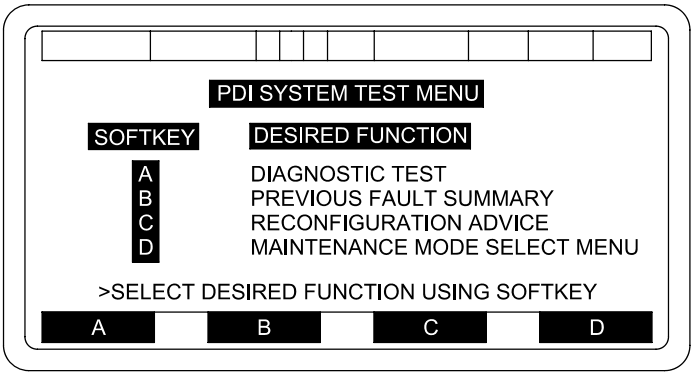


06pc527mb

# M-9 PDFCS AND PDI FAULT DETECTION - CONTINUED

## M-9.3 PDI System Test - Continued

The RECONFIGURATION ADVICE option is missing from the following menu screen. RECONFIGURATION ADVICE will only be available for warning messages sent to the PDCU during Normal Operations and for certain faults detected by the PDFCS.

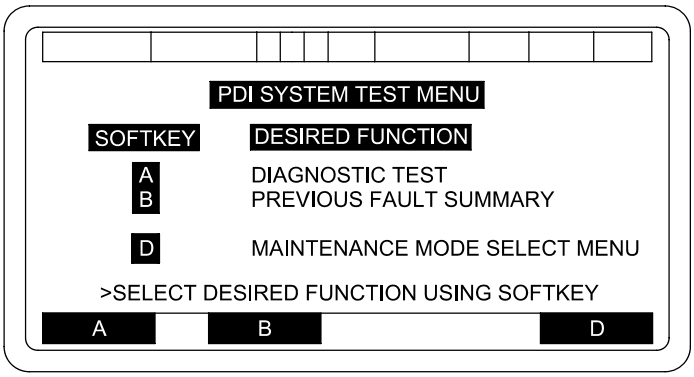


06pc542mb

The PREVIOUS FAULT SUMMARY option is missing from the following menu screen. A PREVIOUS FAULT SUMMARY will only be available if the last DIAGNOSTIC TEST performed was aborted while in progress and faults had been detected or if the last DIAGNOSTIC TEST was completed.

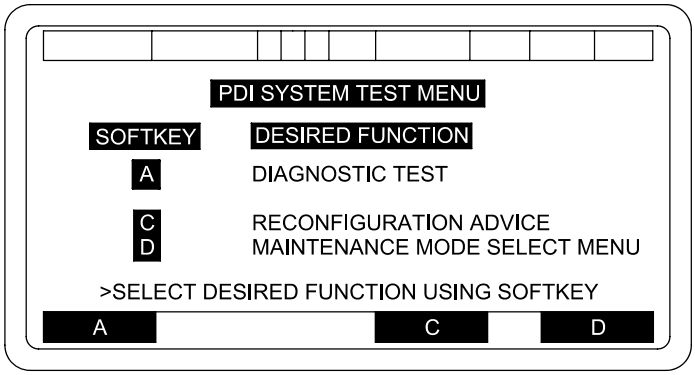


06pc543mb

# M-9 PDFCS AND PDI FAULT DETECTION - CONTINUED

## M-9.3 PDI System Test - Continued

Both the PREVIOUS FAULT SUMMARY and RECONFIGURATION ADVICE options are missing from the following menu screen. Neither of these options can be performed. DIAGNOSTIC TEST and MAINTENANCE MODE SELECT MENU options will always be available.

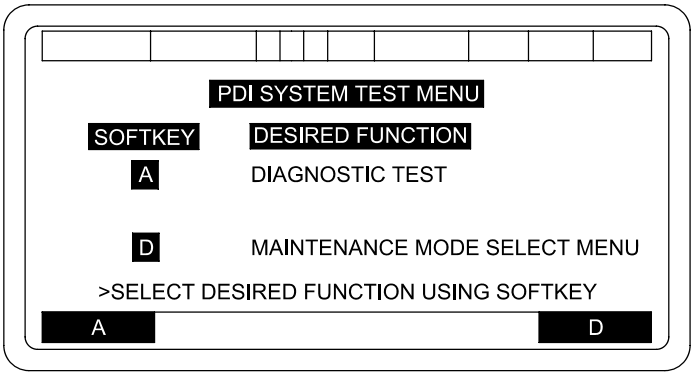


06pc546mb

DIAGNOSTIC TEST is the way you perform all diagnostic testing.

MAINTENANCE MODE SELECT MENU is the way you end PDI system testing and return to PDFCS operations.

# M-9 PDFCS AND PDI FAULT DETECTION - CONTINUED

## M-9.4 Vehicle Motion Sensor Test.

This test is designed to check Vehicle Positioning System. The VMS provides signals to the PDFCS that aid in the location and positioning of vehicle (coordinates).

This test SHOULD be performed under standard vehicle setup conditions (para M-9.3). This test is used whenever directed by troubleshooting procedures, or when NAV DEGRADED is displayed on the PDU and you get ZUPT requests after about 4 minutes of travel.

If test results indicate that VMS is not properly functioning, notify unit maintenance personnel for corrective action.

a. Select VMS TEST from MAINTENANCE MODE SELECT menu.

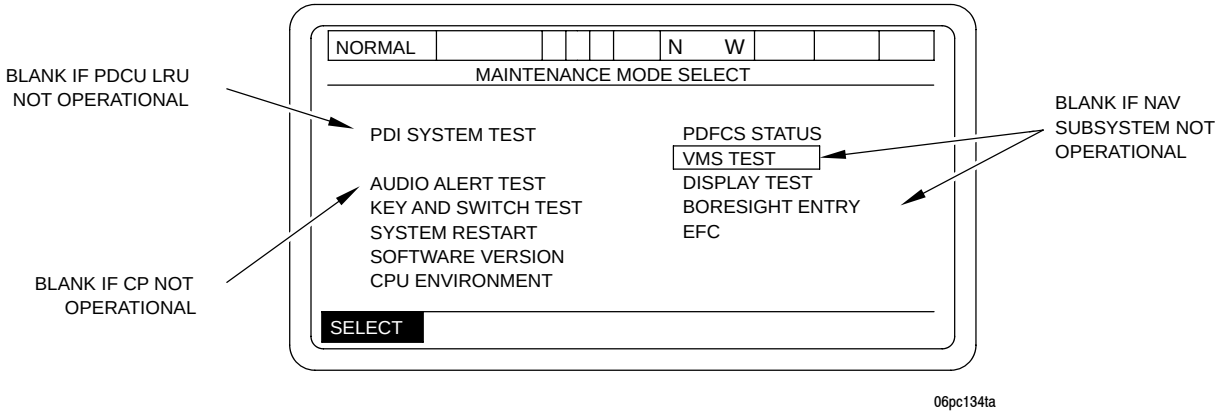

# M-9 PDFCS AND PDI FAULT DETECTION - CONTINUED

## M-9.4 Vehicle Motion Sensor Test - Continued

This test is run automatically.

b. Depressing soft key under CANCEL will end test and take you back to MAINTENANCE MODE SELECT menu.

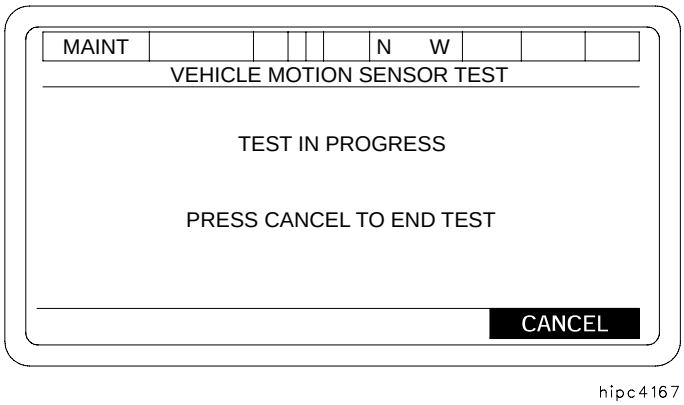


If test results indicate a fault, determine if this degraded mode is acceptable. If not, notify unit maintenance.

Test results can show any of the following:

RESULT -- VMS GOOD

RESULT -- VMS BAD

RESULT -- CAB SIDE VMS MODEM BAD

RESULT -- CHASSIS SIDE VMS MODEM BAD

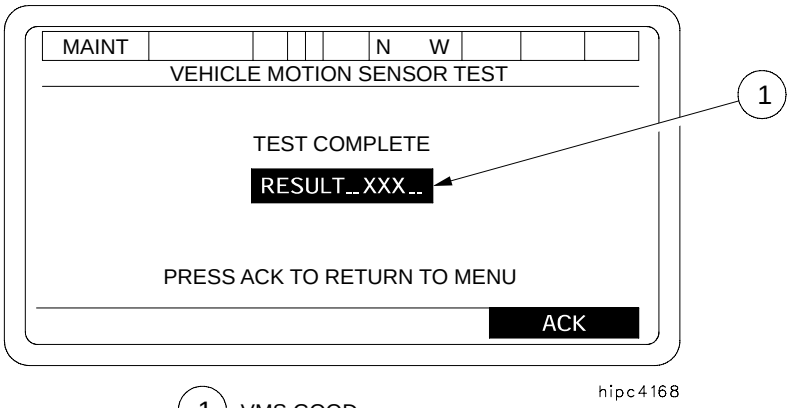


1 VMS GOOD
OR
CHASSIS SIDE VMS MODEM BAD
OR
CAB SIDE VMS MODEM BAD
OR
VMS BAD

c. When test is ended, depress soft key under ACK. This will take you back to MAINTENANCE MODE SELECT menu.

# M-9 PDFCS AND PDI FAULT DETECTION - CONTINUED

## M-9.5 Audio Alert Test.

This test checks the PDFCS communications system fire mission alert notification. During this test, all crewmember's intercom control boxes should emit a repeating tone for 5 seconds. Checks of CVC helmets and intercoms should be performed.

This test should be performed under the standard vehicle setup conditions.

This test is used when directed by troubleshooting procedures, or if testing intercom/CVC is desirable.

a. Select AUDIO ALERT TEST from MAINTENANCE MODE SELECT menu. Press SELECT KEY. AUDIO ALERT TEST is displayed.

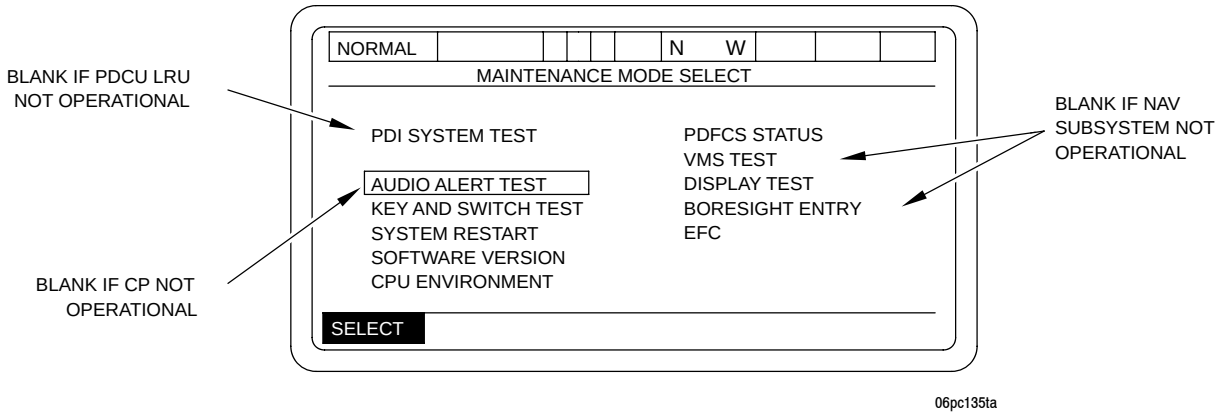


b. Depressing soft key under CANCEL will take you back to MAINTENANCE MODE SELECT menu.

c. Depressing soft key under CONTINUE will start your AUDIO ALERT TEST.

d. When your AUDIO ALERT TEST is completed, you may depress soft key under CONTINUE to repeat test.

e. When test is completed, depress soft key under CANCEL to return to MAINTENANCE MODE SELECT menu.

f. If there is fault with your intercom/PDFCS, notify unit maintenance.

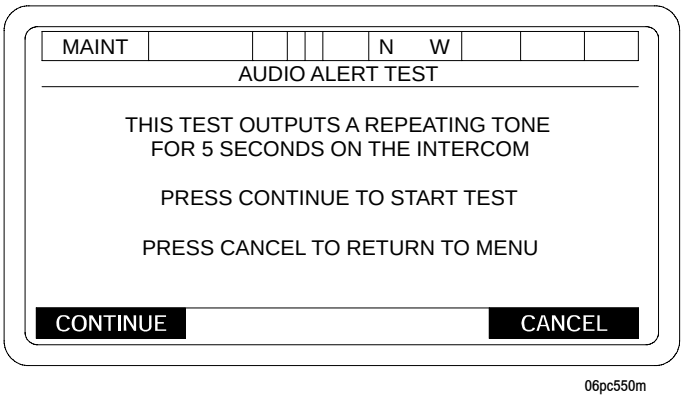

# M-9 PDFCS AND PDI FAULT DETECTION - CONTINUED

## M-9.6 Display Test.

This test checks the uniform color contrast of the display. Information appearing on the screen may become too light to read.

This test should be performed under standard vehicle setup condition (para 3-5A.3).

This test will be used when directed by troubleshooting procedures, or if testing of PDU screen is desirable.

a. Select DISPLAY TEST from MAINTENANCE MODE SELECT menu. Press SELECT key.

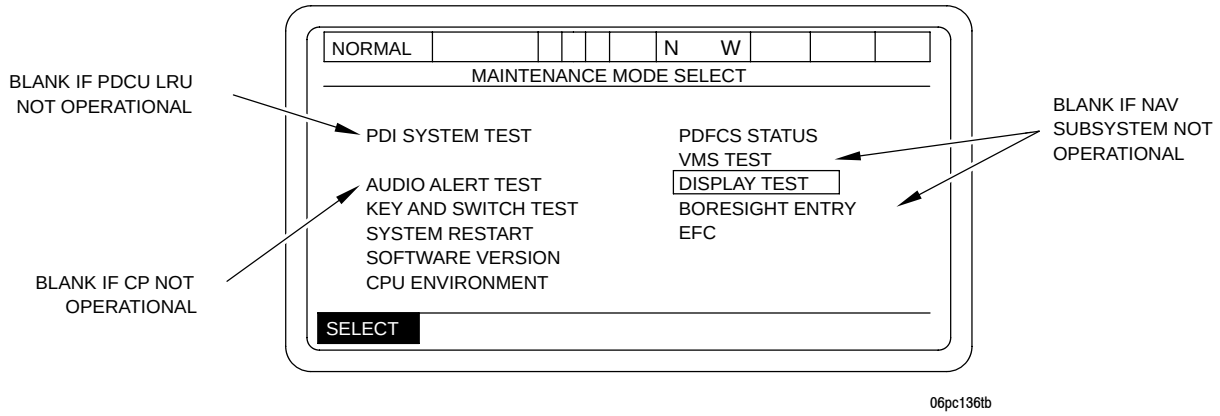


b. Your display will become highlighted for 2 seconds. After 2 seconds, the display will return to normal. You may reselect DISPLAY TEST if required.

c. If there are some spots on your display that did not light up, determine if this degraded mode is acceptable. If this is not acceptable, notify unit maintenance.

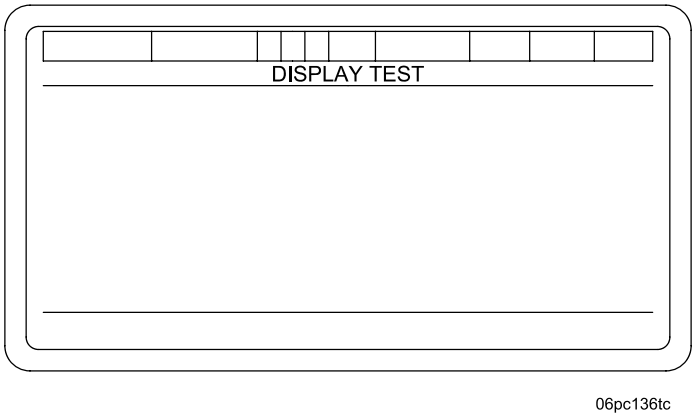

# M-9 PDFCS AND PDI FAULT DETECTION - CONTINUED

## M-9.7 Key and Switch Test.

**NOTE**

PDFCS must be powered up at least 5 minutes prior to performing this test.

This test checks the response of each key and toggle switch on the display. The key marked T is for the embedded trainer switch and the key marked S is the GUN SERVO switch. Ensure that NOTES are observed when conducting this test.

This test should be performed under the standard vehicle setup condition (para M-9.3).

This test will be used when directed by troubleshooting procedures, or if malfunctions of PDFCS keypad and switches are apparent.

Select KEY AND SWITCH TEST from MAINTENANCE MODE SELECT menu. Press SELECT key.

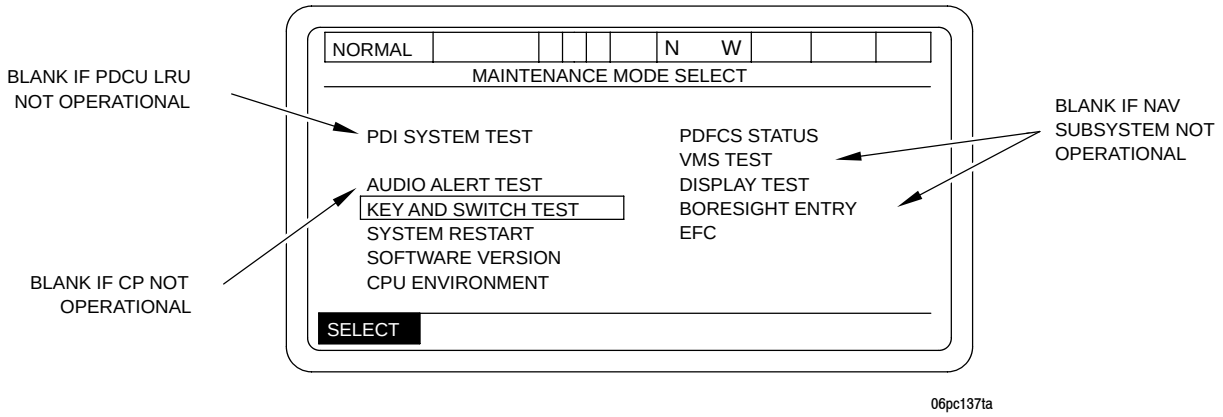


**NOTE**

- Test ends when F1 (soft key) is depressed. Make sure you depress F1 soft key last while performing this test.
- Do not place PDFCS POWER switch to OFF during this test.

a. Depress each key in turn (including arrow keys, soft keys, LOAD, LAY, and STOW keys) and place both switches shown to ON/OFF for testing. As each key is depressed, it will be highlighted.

b. As each switch/toggle is moved, it will move up or down on your display.

c. If fault is indicated with your PDFCS keypad, switches, soft keys, arrow keys, LOAD, LAY, or STOW keys, notify unit maintenance.

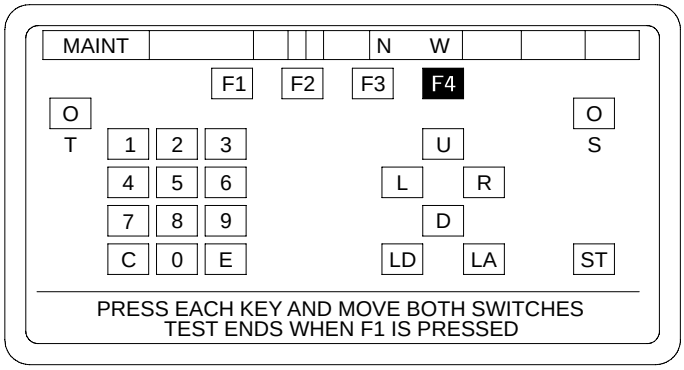

# M-9 PDFCS AND PDI FAULT DETECTION - CONTINUED

## M-9.8 Boresight Angle Entry.

This test is designed for use by unit maintenance personnel only. Operators must not use this selection.

**WARNING**

This selection will be used by unit maintenance personnel to input correction to NAV SUBSYSTEM boresight. Entry of improper data into boresight angle entry menu can cause gun to be laid incorrectly. This could result in injury or death to personnel down range.

**NOTE**

If you accidently enter this mode, you must exit immediately by pressing the CANCEL key.

## M-9.9 Equivalent Full Charge (EFC).

EFC data is maintained by the PDFCS. It consists of a cumulative set which contains the total number of rounds fired by the gun using legal charge and the accumulated EFC based on the total number of rounds fired. The PDFCS saves the data in the non-volatile memory during normal PDFCS power down sequencing.

The calculation of EFC is done automatically for POC/FDC directed fire missions when the operator presses the soft key under the VERIFIED prompt on the VERIFY EXPENDED AMMO menu. However, should the operator not be able to VERIFY that the specified ammunition has been fired, or fire missions have been fired with data supplied by voice radios, or direct fire missions have occurred, then the operator will be required to update the PDFCS Ammunition Inventory and the EFC.

To update the EFC, access the SETUP AND INFORMATION menu, place cursor on MAINTENANCE, and press soft key under SELECT prompt. The MAINTENANCE MODE SELECT menu will appear. Place cursor on EFC and press soft key under SELECT prompt, the EQUIVALENT FULL CHARGE menu will be displayed.

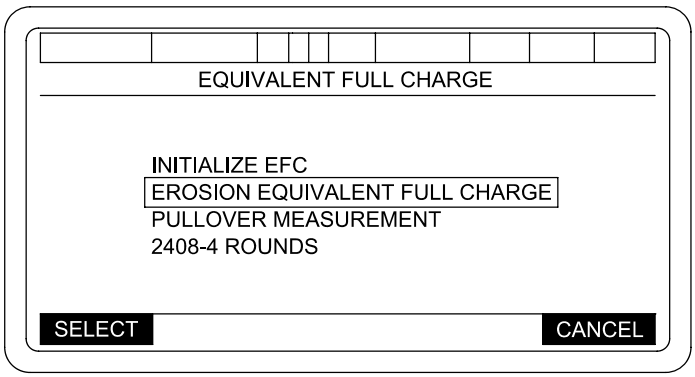


06pc281t

Each of the four functions will not be described separately.

# M-9 PDFCS AND PDI FAULT DETECTION - CONTINUED

## M-9.9 Equivalent Full Charge (EFC) - Continued

M-9.9.1 Initialize EFC.

This function is used to Initialize EFC data in the event a new cannon tube is placed on the vehicle.

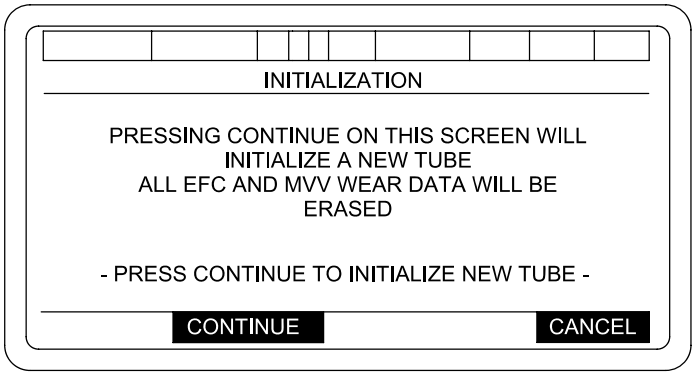


06pc281ta

If you press “CONTINUE”, the PDFCS shall display the operator prompt “ARE YOU SURE?” “YES” “NO”.

If “YES” is pressed, the following actions occur automatically and the display will return to the EQUIVALENT FULL CHARGE menu:

Pullover Gauge Measurement is reset to 6.100 (This also causes EFC Erosion to reset to Zero)
MVV Wear Database is reset to Zero
2408-4 Rounds Information is reset to Zero

If “NO” is pressed, the display will return to the EQUIVALENT FULL CHARGE menu.

M-9.9.2 Erosion Equivalent Full Charge.

This function is used to view the Current EFC Erosion Count of the weapon.

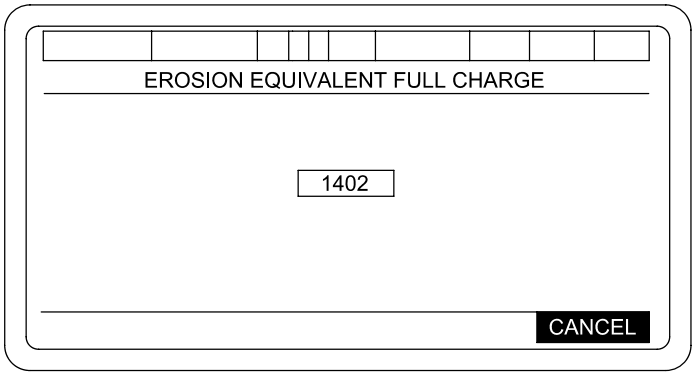


06pc282t

When the “CANCEL” soft key is pressed, the display shall return to the EQUIVALENT FULL CHARGE menu.

# M-9 PDFCS AND PDI FAULT DETECTION - CONTINUED

## M-9.9 Equivalent Full Charge (EFC) - Continued

M-9.9.3 Pullover Measurement.

This function is used to view the Current Pullover Gauge Measurement or input a new Pullover Gauge Measurement.

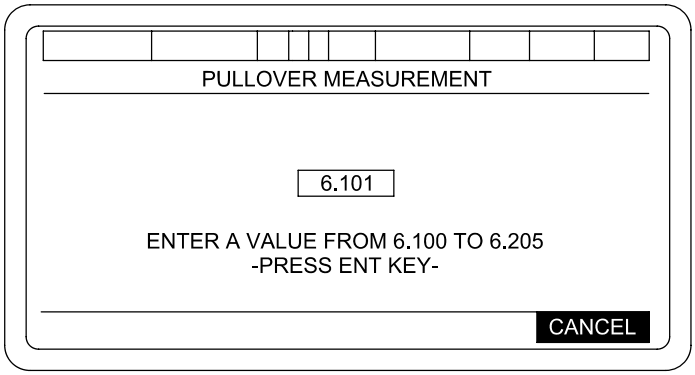


06pc282ta

The operator shall only be allowed to enter a Pullover Measurement of 6.100 to 6.205. If the operator enters a value less than 6.100 or greater than 6.205, the PDFCS shall display the operator warning “VALUE TOO BIG” “ACK” or “VALUE TOO SMALL” “ACK”. When the “ACK” soft key is pressed, the display shall return to the previously stored value.

When the “ENT” key is pressed, the AFCS shall display the operator prompt “ARE YOU SURE?” “YES” “NO”.

If “YES” is pressed, then the PDFCS shall convert the Pullover Gauge Measurement into the equivalent EFC Erosion count and update the EFC Erosion count in the MVV Wear Database. This display will then return to the EQUIVALENT FULL CHARGE menu.

If “NO” is pressed, the screen will return to the previously stored values for reentry of data.

M-9.9.4 2408-4 Rounds.

This screen allows four separate and distinct functions:

The first allows update of Total Rounds (which shall not affect EFC Erosion) to match the Manual 2408-4.
The second permits entry of rounds fired during a period in which the PDFCS was inoperable.
The third allows adjustment of rounds entered during Verification or “Other” missions not actually fired.
The fourth function allows initialization of a new PDCU. When coupled with Pullover Gauge, 2408-4 TOT RNDS prior to Pullover Gauge, and “+/- RNDS”, the last know EFC Erosion can be duplicated.

# M-9 PDFCS AND PDI FAULT DETECTION - CONTINUED

## M-9.9 Equivalent Full Charge (EFC) - Continued

M-9.9.4 2408-4 Rounds - Continued

**NOTE**

To maintain accuracy and consistency, the PDFCS database must be restored exactly as it was at the time the PDFCS became inoperable.

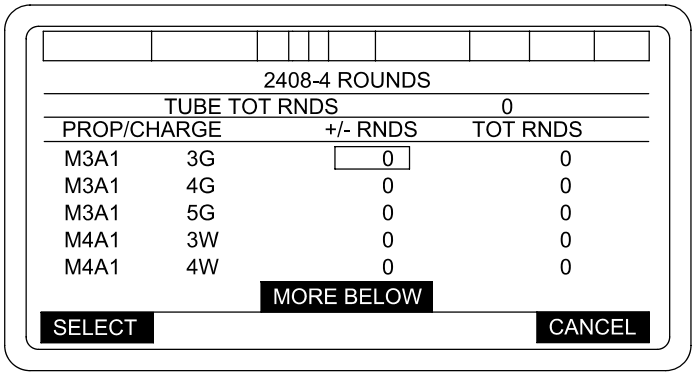


06pc283t

**NOTE**

Scrolling shall be enabled, with “MORE BELOW” and “MORE ABOVE” appearing as appropriate.

When +/- RNDS is highlighted and the “SELECT” soft key is pressed, the following will be displayed:

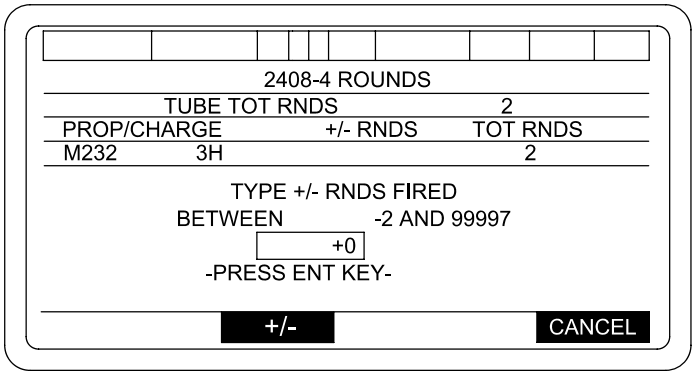


06pc283ta

# M-9 PDFCS AND PDI FAULT DETECTION - CONTINUED

## M-9.9 Equivalent Full Charge (EFC) - Continued

M-9.9.4 2408-4 Rounds - Continued

When TOT RNDS is highlighted and the “SELECT” soft key is pressed the following will be displayed.

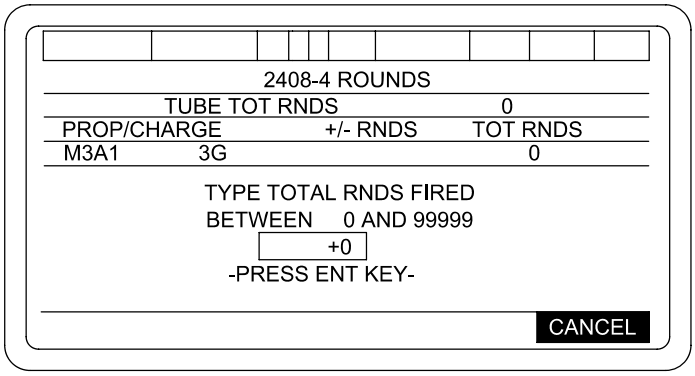


06pc284t

Input new value and press “ENTER” to accept value. When “ENTER” has been pressed the display will return to the 2408-4 ROUNDS screen. An “UPDATE” soft key will display in the FKY-2 position. When “UPDATE” is pressed the following actions occur:

The TOT RNDS column is updated for the selected PROP/CHG
TUBE TOT RNDS is updated
If +/- RNDS input, EFC Erosion is updated in the MVV Wear Database

## M-9 PDFCS AND PDI FAULT DETECTION - CONTINUED

### M-9.10 PDFCS and PDCU Abbreviations.

| ABBREVIATION | NAME |
|---|---|
| ABCS | ARMY BATTLE COMMAND SYSTEM |
| AOF or AF | AZIMUTH OF FIRE |
| ATCCS | ARMY TACTICAL COMMAND AND CONTROL SYSTEM |
| AUXA | EXTERNAL BATTERY-A |
| AUXB | EXTERNAL BATTERY-B |
| AZ | AZIMUTH |
| AZ/EL | AZIMUTH AND ELEVATION TACHOMETERS |
| AZTACH | TACHOMETER |
| BATT | BATTERY |
| BB2 | BRUSH BLOCK #2 |
| BB6 | BRUSH BLOCK #6 |
| BB7 | BRUSH BLOCK #7 |
| BC | BALLISTIC COMPUTATION |
| BCS | BATTERY COMPUTER SYSTEM |
| BDE | BRIGADE |
| BFA | BATTLEFIELD FUNCTIONAL AREAS |
| BIT | BUILT IN TEST |
| BN | BATTALION |
| BPSL | BYPASS SOLENOID |
| BPV | BYPASS VALVE |
| C3 | COMMAND, CONTROL, AND COMMUNICATION |
| CBLS | CABLES |
| CDP | CONDITION DIPOLE |
| CHKFIRE | CHECK FIRE |
| CFN | COOLING FAN |
| CLCS | CLUTCH SOLENOID |
| CLV | CLUTCH VALVE |
| COMMO | COMMUNICATION |
| COS | CHIEF OF SECTION |
| COSCH | CHIEF OF SECTION CONTROL HANDLE |
| COSCH VLF | CHIEF OF SECTION CONTROL HANDLE VELOCITY FUSE |
| COTS | COMMERCIAL OFF THE SHELF |
| CP | COMMUNICATIONS PROCESSING |
| CPCI | COMPUTER PROGRAM CONFIGURATION ITEM |
| CPU | COMPUTER PROCESSING UNIT |
| CRSH | CURRENT SHUNT |
| CTRL | CONTROL |
| CTSW | COOLING TEMPERATURE SWITCH |
| DRU | DYNAMIC REFERENCE UNIT |

# M-9 PDFCS AND PDI FAULT DETECTION - CONTINUED

## M-9.10 PDFCS and PDCU Abbreviations - Continued

| ABBREVIATION | NAME |
|---|---|
| EDS | ENHANCED DISPLAY SYSTEM |
| EL | ELEVATION |
| ELHP | ELEVATION HAND PUMP |
| ELSL | ELEVATION SELECT SOLENOID |
| ELSV | ELEVATION SERVO VALVE |
| ELTACH | ELEVATION TACHOMETER |
| ELTRUN | ELEVATION TRUNNION |
| ELV | ELEVATION SELECT VALVE |
| EQ | EQUILIBRATION |
| EQA | EQUILIBRATION ASSEMBLY |
| EQACC | EQUILIBRATION ACCUMULATOR |
| EQHP | EQUILIBRATOR HANDPUMP |
| EQMANIFOLD | EQUILIBRATION MANIFOLD |
| EQ CHARGE VALVE | EQUILIBRATOR CHARGE VALVE |
| FC | FIRE CONTROL |
| FIL | FILTER |
| FILA | FILTER ASSEMBLY |
| FIREMSN | FIRE MISSION |
| FLOM | FLOWMETER |
| FLU | FLUID |
| FLUSN | FLUID LEVEL SENSOR |
| GB | GIGABYTES |
| GCH | GUNNER'S CONTROL HANDLE |
| GNR | GUNNER |
| GPS | GLOBAL POSITIONING SYSTEM |
| HCB | HYDRAULIC CONTROL BOX |
| HPUMP | HANDPUMP |
| HYD | HYDRAULIC |
| HYM | HYDRAULIC PUMP ELECTRIC MOTOR |
| HYP | HYDRAULIC PUMP |
| HYPR | HYDRAULIC POWER RELAY |
| KU | KEYBOARD UNIT |
| LAN | LOCAL AREA NETWORK |
| MB | MEGABYTES |
| MO | MOVE ORDER |
| MSL | MODE SELECT SOLENOID |
| MSV | MODE SELECT VALVE |
| MVS | MUZZLE VELOCITY SENSOR |

# M-9 PDFCS AND PDI FAULT DETECTION - CONTINUED

## M-9.10 PDFCS and PDCU Abbreviations - Continued

| ABBREVIATION | NAME |
|---|---|
| NA | NAV ASSIST |
| NAV | NAVIGATION |
| NRZ | NON-RETURN TO ZERO |
| OLSN | OVERLOAD SENSOR |
| PCU/PCU-2 | POWER CONDITIONER UNIT-2 |
| PDCU | PROGNOSTIC DIAGNOSTIC INTERFACE UNIT |
| PDFCS | PALADIN DIGITAL FIRE CONTROL SYSTEM |
| PDI | PROGNOSTIC/DIAGNOSTIC INTERFACE |
| PDU | PALADIN DISPLAY UNIT |
| PLGR | PRECISION LIGHTWEIGHT GPS RECEIVER |
| PRESS | PRESSURE |
| PSIAD | PALADIN SERIAL INTERFACE ADAPTER DEVICE |
| PWR | POWER |
| PXDCR | PRESSURE TRANSDUCER |
| RAM | RANDOM ACCESS MEMORY |
| REFIL | RETURN FILTER |
| RHDDC | REMOVABLE HARD DISK DRIVE CARTRIDGE |
| RR | RADIO RACK |
| SA | SITUATIONAL AWARENESS |
| SFIL | SUPPLY FILTER |
| SH | SHUNT |
| SINCGARS | SINGLE CHANNEL GROUND & AIRBORNE RADIO SUBSYSTEM |
| SL | SOLENOID |
| SN | SENSOR |
| SR | SLIP RING |
| SV | SERVO |
| SW | SWITCH |
| SYS | SYSTEM |
| TEMP | TEMPERATURE |
| TOC | TACTICAL OPERATION CENTER |
| TRAV | TRAVERSE |
| TRAV GEAR | TRAVERSING GEAR |
| TRDM | TRAVERSE DRIVE MECHANISM |
| TRLSL | TRAVERSE LIMIT SOLENOID |
| TRLSW | TRAVERSE LIMIT SWITCH |
| TRLV | TRAVERSE LIMIT VALVE |
| TRSL | TRAVERSE SELECT SOLENOID |
| TRSV | TRAVERSE SERVO VALVE |
| TRV | TRAVERSE SELECT VALVE |
| TSN | TEMPERATURE SENSOR |

# M-9 PDFCS AND PDI FAULT DETECTION - CONTINUED

## M-9.10 PDFCS and PDCU Abbreviations - Continued

| ABBREVIATION | NAME |
|---|---|
| TTCBL | TUBE TEMPERATURE SENSOR GFE CABLE |
| TTTSN | TUBE TEMPERATURE SENSOR |
| TXDCR | TEMPERATURE TRANSDUCER |
| VMS | VEHICLE MOTION SENSOR |
| VMSC | VEHICLE MOTION SENSOR MODEM-CAB |
| VMSH | VEHICLE MOTION SENSOR MODEM-HULL |
| VLF | VELOCITY FUSES |
| WC | WEAPONS CONTROLLER |
| WPN | WEAPON |
| WTSL | WARMUP TEMPERATURE SOLENOID |
| WTSW | WARMUP TEMPERATURE SWITCH |
| WTV | WARMUP TEMPERATURE VALVE |

# M-9 PDFCS AND PDI FAULT DETECTION - CONTINUED

## M-9.11 Software Version/Configuration Display.

To view detailed software configuration information for each Computer Program Configuration Item (CPCI) move cursor to “SOFTWARE VERSION” on the MAINTENANCE MODE SELECT menu.

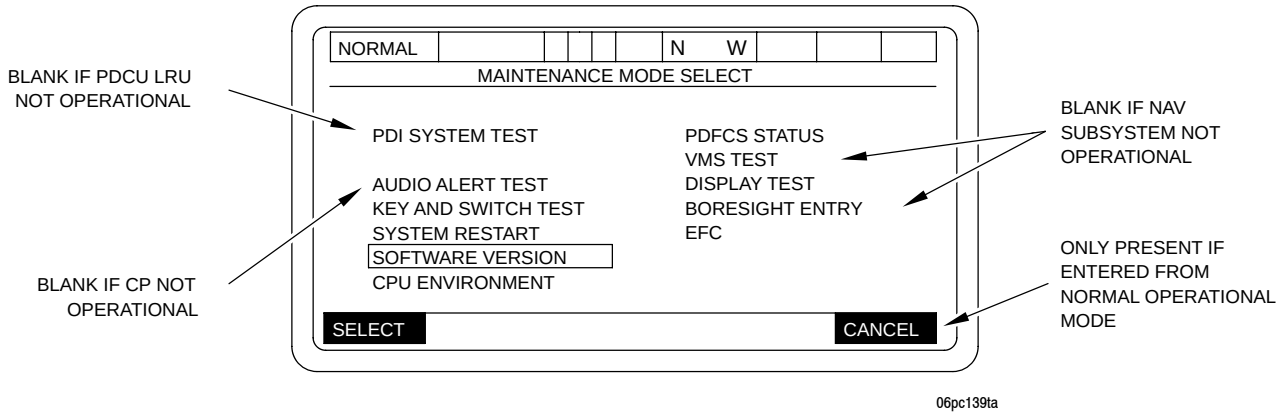


Press soft key label “SELECT” and the SOFTWARE VERSION/CONFIGURATION display as shown below will appear.

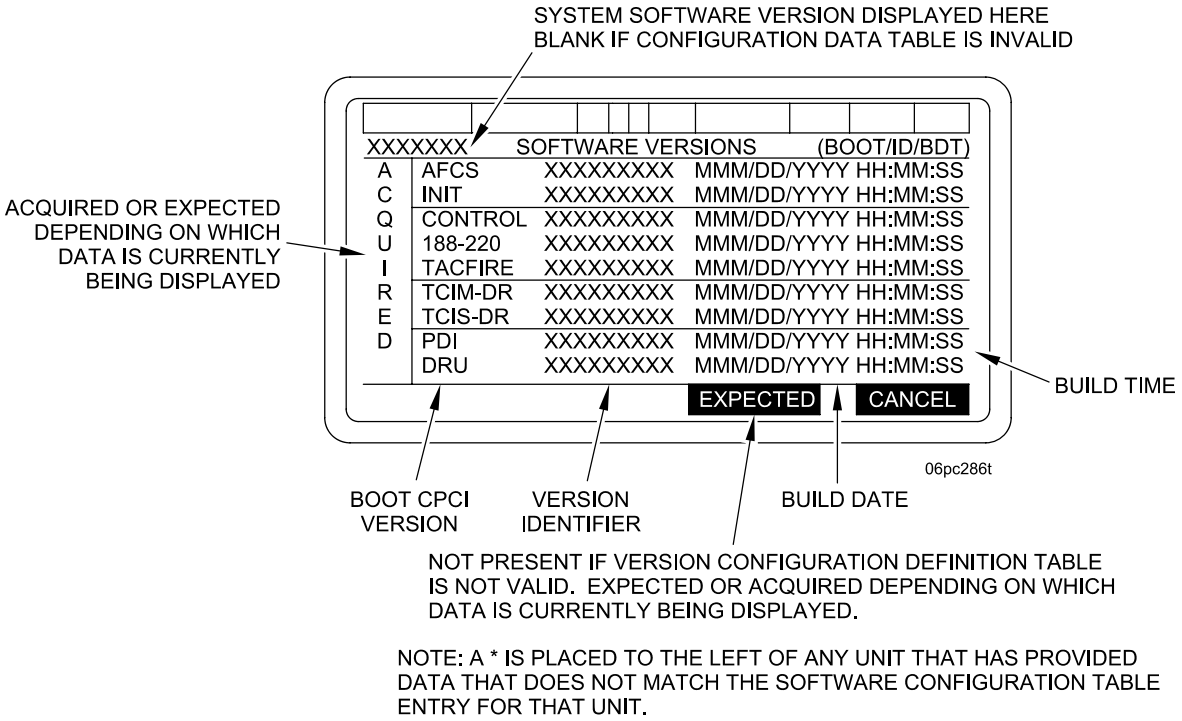


**NOTE**

Information displayed from the DRUH can be interpreted as version configuration data.

# M-9 PDFCS AND PDI FAULT DETECTION - CONTINUED

## M-9.11 Software Version/Configuration Display - Continued

### NOTE

- When a CPCI other than the DCU is reported with an indirect configuration, then the system will run in a degraded mode and will declare the CPCI as unavailable.
- Initially, the ACQUIRED information of the display will give the boot loader, system software version and build data for each computer program configuration item that is acceptable to the system software configuration.
- If the CPCI is not acceptable, there will be an asterisk (*) to the left of the CPCI. If the asterisk is present, this will cause the system to operate in the DEGRADED mode unless the asterisk appears next to DCU, then the system will only operate in the Maintenance mode.
- To check which version of software is acceptable, press softkey under EXPECTED.
- If a CPCI is blank, the version of software loaded is acceptable with any system configuration.
- If uploading of software is required, notify Unit Maintenance.

## M-9.12 CPU Environment Display.

This display allows the operator to view system-related parameters as follows:

Inputs:

1. Operating System Version (O/S)
2. BIOS Information (Vendor & Version)
3. Elapsed Time Meter (in hours)

The tactical software receives the data listed above from the PDCU and presents this information to the operator on the PDU. This information is used by maintenance personnel.

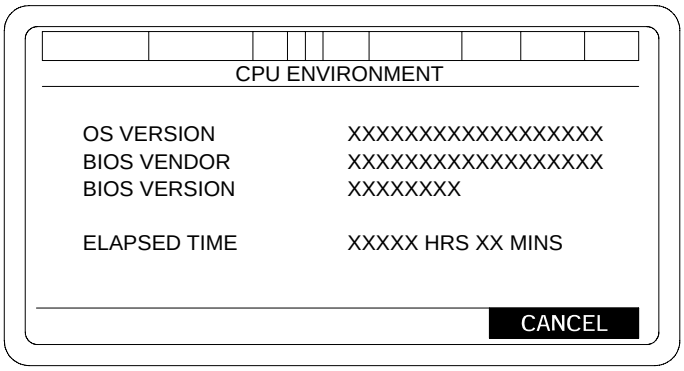


06pc428m

# M-10 SYMPTOM INDEX.

## NOTE

- Before you use this troubleshooting table, be sure you have performed all applicable operating checks in Chapter 2.
- For corrective actions of malfunctions not listed in this table, notify unit maintenance.
- Wherever the word lubricate appears, see Appendix I.

The following symptom index is to assist you in locating the correct troubleshooting procedure quickly.


| PDFCS | Troubleshooting Procedure Page |
|---|---|
| PDFCS-Software Lockup | M-194 |
| Cab does not traverse freely under PDFCS control | M-194 |
| Cab creeps under PDFCS control | M-195 |
| Gun tube does not move to LOAD position when LOAD is selected under PDFCS control | M-196 |
| Gun tube does not move to STOW position when STOW is selected under PDFCS control | M-197 |
| Gun tube does not move to LAY position when LAY is selected under PDFCS control | M-198 |
| PDU does not power up | M-199 |
| Training mode cannot be selected | M-199 |
| PDFCS is not able to receive a mission | M-199 |
| No audible alert for COS or crew (PDU power is ON) | M-200 |
| PDU messages are garbled/hard to read | M-200 |
| Keypad soft keys/arrow keys/keypad switches, LOAD, LAY, or STOW keys do not respond properly | M-200 |
| NAV subsystem fault (degraded mode) is indicated | M-200 |
| PDU subsystem fault (degraded mode) is indicated | M-201 |
| WPN subsystem fault (degraded mode) is indicated | M-201 |
| PDCU subsystem fault (degraded mode) is indicated | M-201 |
| PCU-2 subsystem fault (degraded mode) is indicated | M-201 |
| PMVS subsystem fault (degraded mode) is indicated | M-202 |
| PDFCS position drifts/PDCU “OP FAIL” is indicated. Subsystem (degraded mode) is indicated | M-202 |

**Table 3-1. TROUBLESHOOTING**

**MALFUNCTION**

**TEST OR INSPECTION**

**CORRECTIVE ACTION**

## PDFCS

**WARNING**

Before troubleshooting PDFCS gun positioning faults, make sure immediate area around and in the howitzer is clear of nonessential personnel and that no other equipment is within the 360 degree radius of the cab. Before moving gun servo switch to the ON position, announce loudly to everyone in immediate area, "PDFCS POWER ON." Serious injury or death, and/or equipment damage could result.

1. PDFCS - SOFTWARE LOCKUP

Step 1. Place PDU POWER switch OFF and wait at least 5 seconds.

Step 2. Place PDU POWER switch ON and restart system. If lockup persists, notify unit maintenance.

2. CAB DOES NOT TRAVERSE FREELY UNDER PDFCS CONTROL.

**NOTE**

Verify following: main drive gears and gun tube are unobstructed and main hydraulic pressure is at 1925 psi ± 50 psi.

Step 1. Verify that GUN SERVO light illuminates when LAY button is pressed.

a. If not ON, place gun switch ON.

b. If switch is ON, go to step 2.

Step 2. Check to see if you are in NORMAL OPERATIONS mode.

a. Verify that TRAVERSE mode switch is in the POWER position. Check PDU for mode display. Status line will indicate mode. If not, enter proper mode.

b. If in NORMAL OPERATIONS mode, check display fields.

(1) Verify that LOAD, LAY, or STOW fields are displayed on PDU when GUN SERVO SWITCH is on.

(2) LOAD, LAY, or STOW fields (graphics) are highlighted when displayed.

Gun is already in proper position.

(3) LOAD, LAY, or STOW fields (graphics) are displayed in normal form.

Reselect proper functional key. If cab does not traverse freely, notify unit maintenance. Complete mission in DEGRADED mode.

(4) LOAD, LAY, or STOW fields are not displayed.

If fields are not displayed, go to step 3.

Table 3-1. TROUBLESHOOTING - Continued

| MALFUNCTION / TEST OR INSPECTION | CORRECTIVE ACTION |
|---|---|

## PDFCS - Continued

Step 3. Check PDU for fault indication.

a. GUN SERVO indicator not lit during LOAD/LAY/STOW operation.

Run PDI system test (para M-9.3) and notify unit maintenance. Complete mission in DEGRADED mode.

b. FAULT indicator lit.

Check status line for faulty hardware, run PDI system test (para M-9.3) and notify unit maintenance. Complete mission in DEGRADED mode.

3. CAB CREEPS UNDER PDFCS CONTROL.

Step 1. Verify that GUN SERVO ON/OFF switch is ON.

a. If not ON, place switch ON.

b. If switch is ON, go to step 2.

Step 2. Check to see if you are in NORMAL OPERATIONS mode.

a. Check PDU for mode display.

If not in proper mode, enter proper mode.

b. If in NORMAL OPERATIONS mode, check display fields.

(1) Verify that LOAD, LAY, or STOW fields are displayed on PDU.

(2) LOAD, LAY, or STOW fields are highlighted, when displayed.

Gun is already in proper position, cab should not creep. If cab still creeps, notify unit maintenance. Complete mission in DEGRADED mode.

(3) LOAD, LAY, or STOW fields are displayed properly.

Reselect proper functional key. If cab still creeps, notify unit maintenance.

(4) LOAD, LAY, or STOW fields are not displayed.

If fields are not displayed, go to step 3.

Step 3. Check PDU for fault indication.

a. GUN SERVO indicator not lit during LOAD/LAY/STOW operation.

Run PDI system test (para M-9.3) and notify unit maintenance. Complete mission in DEGRADED mode.

b. FAULT indicator lit.

Check status line on PDU for faulty hardware, run PDI system test (para M-9.3), and notify unit maintenance. Complete mission in DEGRADED mode.

Table 3-1. TROUBLESHOOTING - Continued

| MALFUNCTION | TEST OR INSPECTION | CORRECTIVE ACTION |
|---|---|---|

## PDFCS - Continued

4. GUN TUBE DOES NOT MOVE TO LOAD POSITION WHEN LOAD IS SELECTED UNDER PDFCS CONTROL.

Step 1. Verify that GUN SERVO ON/OFF switch is ON.

a. If not ON, place switch ON.

b. If switch is ON, go to step 2.

Step 2. Check to see if you are in NORMAL OPERATIONS mode.

a. Verify that TRAVERSE mode switch is in the POWER position. Check PDU for mode display. If not in proper mode, enter proper mode.

b. If in NORMAL OPERATIONS mode, check display fields.

(1) Verify that LOAD, LAY or STOW fields are displayed on PDU.

(2) LOAD, LAY, or STOW fields are highlighted, when displayed.

Gun is already in proper position.

(3) LOAD, LAY, or STOW fields are displayed properly.

Reselect proper functional key. If gun tube still does not move to LOAD position, notify unit maintenance. Complete mission in DEGRADED mode.

(4) LOAD, LAY, or STOW fields are not displayed.

If fields are not displayed, go to step 3.

Step 3. Check PDU for fault indication.

a. GUN SERVO indicator not lit during LOAD/LAY/STOW operation.

Run PDI system test (para M-9.3) and notify unit maintenance. Complete mission in DEGRADED mode.

b. FAULT indicator lit.

Check status line on PDU for faulty hardware, run PDI system test (para M-9.3), and notify unit maintenance. Complete mission in DEGRADED mode.

Table 3-1. TROUBLESHOOTING - Continued

| MALFUNCTION | TEST OR INSPECTION | CORRECTIVE ACTION |
|---|---|---|

## PDFCS - Continued

5. GUN TUBE DOES NOT MOVE TO STOW POSITION WHEN STOW IS SELECTED UNDER PDFCS CONTROL.

Step 1. Verify that GUN SERVO ON/OFF switch is ON.

a. If not ON, place switch ON.

b. If switch is ON, go to step 2.

Step 2. Check to see if you are in NORMAL OPERATIONS mode.

a. Verify that TRAVERSE mode switch is in the POWER position. Check PDU for mode display. If not in proper mode, enter proper mode.

b. If in NORMAL OPERATIONS mode, check display fields.

(1) Verify that LOAD, LAY, or STOW fields are displayed on PDU.

(2) LOAD, LAY, or STOW fields are highlighted when displayed.

Gun tube is already in proper position.

(3) LOAD, LAY, or STOW fields are displayed properly.

Reselect proper functional key. If gun tube does not traverse/elevate freely, notify unit maintenance. Complete mission in DEGRADED mode.

(4) LOAD, LAY, or STOW fields are not displayed.

If fields are not displayed, go to step 3.

Step 3. Check PDU for fault indication.

a. GUN TUBE SERVO indicator not lit during LOAD/LAY/STOW operation.

Run PDI system test (para M-9.3) and notify unit maintenance. Complete mission in DEGRADED mode.

b. FAULT indicator lit.

Check status line on PDU for faulty hardware, run PDI system test (para M-9.3), and notify unit maintenance. Complete mission in DEGRADED mode.

**Table 3-1. TROUBLESHOOTING - Continued**

**MALFUNCTION**

**TEST OR INSPECTION**

**CORRECTIVE ACTION**

## PDFCS - Continued

6. GUN TUBE DOES NOT MOVE TO LAY POSITION WHEN LAY IS SELECTED UNDER PDFCS CONTROL.

Step 1. Verify that GUN SERVO ON/OFF switch is ON.

a. If not ON, place switch ON.

b. If switch is ON, verify TRAVERSE LOCK is in UNLOCKED position. Go to step 2.

Step 2. Check to see if you are in NORMAL OPERATIONS mode.

a. Verify that TRAVERSE mode switch is in the POWER position. Check PDU for mode display. If not in proper mode, enter proper mode.

b. If in NORMAL OPERATIONS mode, check display fields.

(1) Verify that LOAD, LAY, or STOW fields are displayed on PDU.

(2) LOAD, LAY, or STOW fields are highlighted, when displayed.

Gun tube is already in proper position.

(3) LOAD, LAY, or STOW fields are displayed properly.

Reselect proper functional key. If gun tube still does not move to LAY position, notify unit maintenance. Complete mission in DEGRADED mode.

(4) LOAD, LAY, or STOW fields are not displayed.

If fields are not displayed, go to step 3.

Step 3. Check PDU for fault indication.

a. GUN TUBE SERVO indicator not lit during LOAD/LAY/STOW operation.

Run PDI system test (para M-9.3) and notify unit maintenance. Complete mission in DEGRADED mode.

b. FAULT indicator lit.

Check status line on PDU for faulty hardware and notify unit maintenance. Complete mission in DEGRADED mode.

Table 3-1. TROUBLESHOOTING - Continued

| MALFUNCTION | TEST OR INSPECTION | CORRECTIVE ACTION |
|---|---|---|

## PDFCS - Continued

7. PDU DOES NOT POWER UP.

Step 1. Verify that MASTER and HYDRAULIC POWER switches are ON.

a. If not ON, place switch(es) ON.

b. If switch(es) are ON, go to step 2.

Step 2. Verify that PCU-2 circuit breakers are ON.

a. If not ON, place appropriate circuit breaker(s) ON.

b. If all circuit breakers are ON, notify unit maintenance.

8. TRAINING MODE CANNOT BE SELECTED.

Step 1. Verify that you are in the proper mode for TRAINING selection.

a. If not, enter TRAINING mode.

b. If in TRAINING mode, place the TRAINING ON/OFF switch in ON position.

Step 2. TRAINING mode still cannot be entered.

Notify unit maintenance.

9. PDFCS IS NOT ABLE TO RECEIVE A MISSION.

Step 1. Verify that during POWER UP STATUS, PDFCS is okay.

a. PDFCS subsystems do not check out as OK. If not OK, notify unit maintenance. If degraded, go to step 2.

b. PDFCS subsystems check out OK. Go to step 2.

Step 2. Verify that you are in proper mode (NORMAL OPERATIONS).

a. If not in proper mode, enter NORMAL OPERATIONS mode and go through NETWORK display until you get to SETUP AND INFORMATION display. Now go to step 3.

b. If already in proper mode, go to step 3.

Step 3. Verify that data entry has been provided and is correct for all items marked with an * on SETUP AND INFORMATION display.

a. If data has not been entered, enter data now to initialize system. Now system is able to receive a mission.

b. If data has been entered for the * items and you still are unable to receive a mission, notify unit maintenance.

Table 3-1. TROUBLESHOOTING - Continued

| MALFUNCTION | TEST OR INSPECTION | CORRECTIVE ACTION |
|---|---|---|

## PDFCS - Continued

10. NO AUDIBLE ALERT FOR COS OR CREW (PDU POWER IS ON).

    Step 1. Verify that wire/cable connections are tight.

    If wire/cable connections are tight, go to step 2.

    Step 2. Go to para M-9.5 and perform Audio Alert Test.

    a. If intercom is not adjusted properly, adjust it now.

    b. Rerun Audio Alert Test and go to step 3.

    Step 3. If there is still no audible signal, notify unit maintenance that intercom/PDFCS is faulty.

11. PDU MESSAGES ARE GARBLED/YHARD TO READ.

    Step 1. Verify that wire/cable connections are tight.

    If wire/cable connections are tight, go to step 2.

    Step 2. Go to para M-9.6 and perform Display Test.

    a. If test indicates that some of the pixels on PDU are burned out, notify unit maintenance that PDU is faulty.

    b. If test does not indicate a problem with pixels, have unit maintenance check PDFCS.

12. KEYPAD SOFT KEYS/ARROW KEY/KEYPAD SWITCHES, LOAD, LAY, OR STOW KEYS DO NOT RESPOND PROPERLY.

    Step 1. Verify PDFCS window is active by touching or left clicking on the window area or the "PDFCS" button on the task bar. If this doesn't correct the problem, proceed to step 2.

    Step 2. Verify that cable/harness connections are tight.

    If wire/cable connections are tight, go to step 3.

    Step 3. Go to para M-9.7 and perform Key and Switch Test.

    a. If test indicates a fault, notify unit maintenance that PDU is faulty.

    b. If no fault is indicated, notify unit maintenance to check PDFCS.

13. NAV SUBSYSTEM FAULT (DEGRADED MODE) IS INDICATED.

    Step 1. Verify that wire/cable connections are tight.

    If wire/cable connections are tight, go to step 2.

    Step 2. Traverse cab left and right 90 degrees from travel lock position and verify fault has been eliminated. If not, clean slip ring segment boards (para 3-8.17) and try the VMS test again before notifying unit maintenance.

    Step 3. Go to para M-9.2 and perform BIT Status Test.

    a. Determine which subsystem is degraded. If VMS fault is indicated, go to para M-9.4 and perform VMS test. Notify unit maintenance of particular fault.

    b. Check PDCU reconfiguration advice (Appendix G.3). Determine if DEGRADED mode is acceptable. (Certain degraded subsystems will not interfere with PDFCS operation or mission capability, i.e., VMS is out.) If acceptable, continue mission.

Table 3-1. TROUBLESHOOTING - Continued

| MALFUNCTION | TEST OR INSPECTION | CORRECTIVE ACTION |
|---|---|---|

## PDFCS - Continued

14. PDU SUBSYSTEM FAULT (DEGRADED MODE) IS INDICATED.

    Step 1. Verify that wire/cable connections are tight.

    If wire/cable connections are tight, go to step 2.

    Step 2. Go to para M-9.2 and perform BIT Status Test.

    a. Determine which subsystem is degraded. Notify unit maintenance of particular fault.

    b. Determine if DEGRADED mode is acceptable. (Certain degraded subsystems will not interfere with PDFCS operation or mission capability; i.e., Embedded Trainer is out.) If acceptable, continue mission.

15. WPN SUBSYSTEM FAULT (DEGRADED MODE) IS INDICATED.

    Step 1. Verify that wire/cable connections are tight.

    If wire/cable connections are tight, go to step 2.

    Step 2. Go to para M-9.2 and perform BIT Status Test.

    a. Determine which subsystem is degraded. Notify unit maintenance of particular fault.

    b. Check PDCU reconfiguration advice (Appendix G.3). Determine if DEGRADED mode is acceptable. (Certain degraded subsystems will not interfere with PDFCS operation or mission capability; i.e., Tube Temp is out.) If acceptable, continue mission.

16. PDCU SUBSYSTEM FAULT (DEGRADED MODE) IS INDICATED.

    Step 1. Verify that wire/cable connections are tight.

    If wire/cable connections are tight, go to step 2.

    Step 2. Go to para M-9.2 and perform BIT Status Test.

    a. Determine which subsystem is degraded. Notify unit maintenance of particular fault.

    b. Determine if DEGRADED mode is acceptable. (Certain degraded subsystems will not interfere with PDFCS operation or mission; i.e., PDCU is out.) If acceptable, continue mission.

17. PCU-2 SUBSYSTEM FAULT (DEGRADED MODE) IS INDICATED.

    Step 1. Verify that wire/cable connections are tight.

    If wire/cable connections are tight, go to step 2.

    Step 2. Go to para M-9.2 and perform BIT Status Test.

    a. Determine which subsystem is degraded. Notify unit maintenance of particular fault.

    b. Determine if DEGRADED mode is acceptable. (Certain degraded subsystems will not interfere with PDFCS operation or mission capability; i.e., PCU-2 BIT failed.) If acceptable, continue mission.

**Table 3-1. TROUBLESHOOTING - Continued**

**MALFUNCTION**

**TEST OR INSPECTION**

**CORRECTIVE ACTION**

## PDFCS - Continued

18. PMVS SUBSYSTEM FAULT (DEGRADED MODE) IS INDICATED.

    Step 1. Verify that cable/harness connections are tight.

    If wire/cable connections are tight, go to step 2.

    Step 2. Go to para M-9.2 and perform BIT status test.

    a. Determine which subsystem is degraded. Notify unit maintenance of particular fault.

    b. Determine if DEGRADED mode is acceptable. (Certain degraded subsystems will not interfere with PDFCS operation or mission capability; i.e. PCU-2 BIT failed.) If acceptable, continue mission.

19. PDFCS POSITION DRIFTS/PDCU "OP FAIL" IS INDICATED. SUBSYSTEM (DEGRADED MODE) IS INDICATED.

**NOTE**

- Infrequently, the PDFCS position has been observed to drift while the howitzer is stationary, or the "NAV OUT - DRU OP FAIL" alert message is displayed, for no apparent reason. These problems have been traced to errors in communications between the PDFCS and PDCU. With the GPS receiver (PLGR) installed and the PDFCS operated in a GPS aided mode, the problem will be bound to an acceptable level. If the PLGR is off or not receiving acceptable signals from four satellites, the drift may occur to an unacceptable level.

- Unless there is an operational constraint on using GPS, it is recommended that the PLGR be installed and the PDFCS be operated in the GPS aided mode.

Follow the steps below if position is drifting when the howitzer is stationary and any of the following symptoms are observed: (Note that these conditions are normal when the howitzer is travelling.)

a. "ZPT" is displayed in field 6 in the top line of the display. (Note that it takes about 30 seconds after the vehicle stops for a normal "ZPT" indication to clear.)

b. PDFCS position changes more than 10 meters.

c. The "ZUPT REQUIRED" alert message is displayed.

d. The "NAV POS UPDATE REQUESTED" alert message is displayed.

e. The "PRESS ACK WHEN TUBE STOWED" alert message is displayed when the howitzer hasn't traveled.

f. The "POS UPDATE INTERRUPTED" alert message is displayed after a NAV UPDATE is attempted.

g. The "POS UPDATE RJTD HOWITZER MOVG" alert message is displayed after a NAV UPDATE is attempted.

Table 3-1. TROUBLESHOOTING - Continued

| MALFUNCTION<br>TEST OR INSPECTION | CORRECTIVE ACTION |
|---|---|

## PDFCS - Continued

(Note that the “POSITION UPDATE REQUIRED” alert message can be triggered by several conditions. Unless accompanied by one of the above indications, it is not a symptom of position drift.)

If any of the position drift symptoms are observed or the “NAV OUT - DRU OP FAIL” alert message is displayed, perform the following procedure:

Step 1. Power down the PDFCS.

Step 2. Power the PDFCS back up.

Step 3. Reinitialize the PDFCS

**NOTE**

Do not replace the PDCU for position drift or PDCU OP FAIL problems. If cycling power, as discussed above, doesn’t relieve the symptoms, notify unit maintenance.

## M-11 PDFCS CONFIDENCE TESTS.

### M-11.1 Verification of Position and Direction Using Survey Data.

**NOTE**

To perform the direction tests, it is important that the spheroid and grid zone stored in the PDFCS map mod are correct for the area of operation. If the PDFCS spheroid and grid zone are incorrect, get a correct map mod from FDC (select GET INITIALIZATION on the FDC DATA XFER menu) or enter the correct spheroid and grid zone by selecting ENTER SPHEROID/DATUM on the SETUP AND INFORMATION menu.

During field training or combat, the position and direction data shown by the PDFCS can be checked by using a surveyed location. The built-in-test (BIT) does not fully assure that the PDFCS accuracy is within tolerance.

To perform the position test, two carefully surveyed points about 3-4 km apart are required, with an accuracy of 1:1000 or better.

To perform the direction test, there are three options:

- Surveyed orienting station and end of orienting line (OS/EOL). The OS should be at least 100 meters from the howitzer survey point.
- A surveyed azimuth to a distant aiming point (DAP) that is at least 1500 meters away from the survey point. A closer point may be used, but the test will not be as accurate.
- When no survey azimuth is available, a deflection test using the PANTEL is possible.

Perform the tests as follows.

M-11.1.1 Verification of Position Using Survey Points.

a. Initialize the PDFCS with the howitzer left front sprocket within one meter of the first survey point. Ensure easting, northing, and altitude match the data posted on the survey marker.

**NOTE**

If a surveyed azimuth to a DAP will be used for a direction test at the second survey point, then the FDC move order should include the azimuth to DAP as the center of sector. If a manual move order is used, first enter the azimuth to DAP as the center of sector on the DEFINE SECTOR OF FIRE menu (select SECTOR OF FIRE from SETUP AND INFORMATION menu). Then by positioning howitzer at second survey point with vehicle heading aligned with center of sector, you will ensure the tube is pointed toward the DAP.

b. After the nav subsystem is fully aligned, receive a move order from FDC (destination INIT POINT) to the second survey point. If FDC is not available, enter a manual move order to the second survey point.

c. Move to the second survey point without stopping.

d. Upon arrival at the survey point, position howitzer with the left front sprocket within one meter of survey point. Wait 30 seconds before proceeding to next step.

# M-11 PDFCS CONFIDENCE TESTS - CONTINUED

## M-11.1 Verification of Position and Direction Using Survey Data - Continued

M-11.1.1 Verification of Position Using Survey Points - Continued

e. With the STEER TO screen displayed, read and record PDFCS position data under POSN (easting, northing, and altitude) and the range to destination (RNG) in the upper right corner of the screen. Subtract the POSN altitude from the DESTN altitude.

f. Compare the data obtained in step e with the following tolerances.

| | |
|---|---|
| RNG | 26 meters or less |
| Altitude Difference | ± 26 meters |

g. If the PDFCS data is within tolerance, but the POSN easting, northing, and altitude do not match the survey marker data exactly, then press ARRIVED key and do a NAV POSN UPDATE, using the NAV POSN UPDATE screen from the SETUP AND INFORMATION menu.

h. If PDFCS data is within tolerance, position test is complete. Skip the steps below and proceed to the chosen method for testing direction.

i. If the PDFCS data is out of tolerance, verify the DESTN easting, northing, and altitude matches the data on the survey marker. If they do not match, record the survey marker data for later use.

j. Press ARRIVED key. Select NAV POSN UPDATE from the SETUP AND INFORMATION menu to enter the survey marker data. Do a NAV POSN UPDATE by pressing the USE ALL key.

k. After the nav subsystem is fully aligned, receive a MOVE ORDER from FDC (or do a manual move order) to the first survey point.

l. Move to the first survey point without stopping.

m. Repeat steps d through f at the first survey point. Record the data and note whether the PDFCS is in or out of tolerance.

n. Press ARRIVED key. Select NAV update from the SETUP AND INFORMATION menu to enter the survey marker data. Do a NAV position update by pressing the USE ALL key.

o. After the nav subsystem is fully aligned, receive a move order from FDC (or do a manual move order) to the second survey point.

p. Move to the second survey point without stopping.

q. Repeat steps d through f at the second survey point. Record the data and note whether the PDFCS is in or out of tolerance.

r. If the PDFCS was out of tolerance two out of three trials, notify unit maintenance.

s. If the PDFCS was in tolerance two out of three trials, press ARRIVED key. Select NAV UPDATE from the SETUP AND INFORMATION menu and enter the second survey marker data. Do a NAV POSN UPDATE by pressing USE ALL key. Proceed to the chosen method for testing direction.

M-11.1.2 Verification of Direction Using an OS/EOL.

The PDFCS nav subsystem uses gyros to align the system to north. Checks of PDFCS direction may be accomplished using survey points and the M2 aiming circle, or a theodolite. Perform the test as follows.

a. Ensure the howitzer is fully initialized and emplaced at the survey point on level ground. Ensure that a NAV POSN UPDATE has been done using the survey marker data.

b. Unstow the tube. Install muzzle crosshairs.

c. Set up and level the aiming circle over the OS.

# M-11 PDFCS CONFIDENCE TESTS - CONTINUED

## M-11.1 Verification of Position and Direction Using Survey Data - Continued

M-11.1.2 Verification of Direction Using an OS/EOL - Continued

d. Place the azimuth of the Orienting Line (OL) on the aiming circle using the upper (recording) motion.

e. Sight the aiming circle on the EOL using the lower (non-recording) motion.

f. Sight the aiming circle toward the howitzer using the upper (recording) motion.

g. Using the primer vent hole and muzzle crosshairs, align the cannon bore on the aiming circle lens.

h. With the upper (recording) motion of the aiming circle, align the vertical crosshair on the center of the cannon bore. Aiming circle operator announces "NUMBER (SO AND SO) REFER, AIMING POINT THIS INSTRUMENT."

i. Read the azimuth to the cannon bore. This corresponds to the back azimuth of the cannon bore.

j. If the aiming circle azimuth to the tube is greater than 3200, subtract 3200 to obtain tube pointing azimuth. If the aiming circle azimuth to the tube is less than 3200, add 3200 to obtain tube pointing azimuth.

k. Select DISPLAY FORMAT from the SETUP AND INFORMATION menu. Change display from DEFLECTION to AZIMUTH and press USE ALL key.

l. Select FIRE COMMANDS from the SETUP AND INFORMATION menu. When FIRE COMMANDS menu is displayed, press USE ALL to display a FIRE MISSION screen.

m. Read and record ACTL AZ and QUAD off the FIRE MISSION screen. PDFCS operator announces "NUMBER (SO AND SO), AZIMUTH (SO MUCH)".

n. Aiming circle operator compares the readings from steps j and m. If the difference is with ± 2 mils, the aiming circle operator announces "SAFE".

**NOTE**

Quadrant should also be checked with a pretested gunner's quadrant. After adjusting for breech correction, reading should compare within ± 2 mils.

o. PDFCS operator compares the readings from steps k and n. If the difference is within ± 2 mils, the direction test is complete. Skip the steps below. Press EOM key on the FIRE MISSION menu to return to the SETUP AND INFORMATION menu. Select DISPLAY FORMAT and change display back to DEFLECTION and press USE ALL key.

p. If either the azimuth or quadrant difference exceeds ± 2 mils, stow tube. Select NAV UPDATE from SETUP AND INFORMATION menu. When NAV UPDATE menu is displayed, check data and correct if necessary. When data is correct, select FORCE NAV RESTART and press USE ALL key to align the nav subsystem.

q. Recheck the aiming circle level and position over the stake.

r. After the nav subsystem if fully aligned, unstow tube and repeat steps d through o.

s. If results are still out of tolerance, notify unit maintenance.

# M-11 PDFCS CONFIDENCE TESTS - CONTINUED

## M-11.1 Verification of Position and Direction Using Survey Data - Continued

M-11.1.3 Verification of Direction Using an Azimuth to a DAP.

The PDFCS nav subsystem uses gyros to align the system to north. Checks of PDFCS direction may be accomplished using a survey point and a surveyed azimuth to a DAP at least 1500 meters away. A closer point may be used, but the test will not be as accurate. Perform the test as follows.

a. Ensure the PDFCS is fully initialized and the nav subsystem is fully aligned. Ensure the howitzer is positioned with the left front sprocket within one meter of the survey point. Ensure the howitzer is pointed generally toward the DAP.

b. Unstow the tube.

c. Align the cannon bore on the DAP.

d. Select DISPLAY FORMAT from the SETUP AND INFORMATION menu. Change display from DEFLECTION to AZIMUTH and press USE ALL key.

e. Select FIRE COMMANDS from the SETUP AND INFORMATION menu. When FIRE COMMAND menu is displayed, press USE ALL to display a FIRE MISSION screen.

f. Read and record ACTL AZ and QUAD off the FIRE MISSION screen.

g. Compare the azimuth display on the PDFCS (ACTL AZ) with the surveyed azimuth to the DAP. Azimuth should compare within ± 2 mils.

h. Compare the quadrant displayed on the PDFCS (ACTL QUAD) with the quadrant elevation off the M145A1 Mount. Quadrant elevation should compare within ± 2 mils.

**NOTE**

Quadrant should also be checked with a pretested gunner's quadrant. After adjusting for breech correction, reading should compare within ± 2 mils.

i. If the results are within tolerance, the test is complete. Skip the steps below. Press EOM key on the FIRE MISSION menu to return to the SETUP AND INFORMATION menu. Select DISPLAY FORMAT and change display back to DEFLECTION and press USE ALL key.

j. If the results are out of tolerance, stow tube. Select NAV UPDATE from SETUP AND INFORMATION menu. When NAV UPDATE menu is displayed, check data and correct if necessary. When data is correct, select FORCE NAV RESTART and press USE ALL key to align the nav subsystem.

k. After the NAV subsystem is fully aligned, unstow tube and repeat steps c through i.

l. If results are still out of tolerance, notify unit maintenance.

# M-11 PDFCS CONFIDENCE TESTS - CONTINUED

## M-11.1 Verification of Position and Direction Using Survey Data - Continued

M-11.1.4 Verification of Deflection and Quadrant.

If surveyed azimuth data is not available, you can check the PDFCS and the PANTEL for a match in deflection and quadrant elevation. To perform this test, a DAP at least 1500 meters away is needed. Perform the test as follows.

**NOTE**

The howitzer may be positioned at a survey point if the position test is also being conducted. However, a survey point is not necessary to perform the deflection and quadrant test alone.

a. Receive a move order from FDC to fire point. If FDC is not available, enter a manual move order to a FIRE POINT.

b. With the EMPLACE FIRE POINT screen displayed, position howitzer with tube pointed generally toward center of sector (base azimuth).

c. Press ARRIVED and unstow tube. Install muzzle crosshairs.

d. Use default value for MAXIMUM TUBE ELEVATION and press USE ALL on the SITE DEFINITION screen. The SECTION IN ORDER AT FIRE POINT screen will be displayed.

e. Using the power control handle, traverse the tube until ACTL DEFL displays 3200 deflection on the SECTION IN ORDER screen (this is the center of sector or base azimuth).

**NOTE**

If there is no FPF or priority fire mission on the screen, you may press the LOAD key to traverse the tube to 3200 deflection. Ensure that ACTL DEFL remains on 3200 deflection when you release the LOAD key. Adjust with power control handle, if necessary.

f. Check boresight of PANTEL with M140/M140A1 alignment device.

g. Select a DAP that is at least 1500 meters away.

h. Using the Azimuth deflection knob, align the vertical hairline of the PANTEL on the DAP. Level the pitch and cross level bubbles and check alignment.

i. Rotate counter rest knob on PANTEL until 3200 appears on reset counter.

j. Using the primer vent hole and muzzle crosshairs, align the tube on the DAP.

k. Level pitch and cross level bubbles on PANTEL mount. Using the azimuth deflection knob, align vertical hairline of PANTEL on the DAP. Record PANTEL deflection reading.

l. Center elevation level vial on M145A1 mount. Record M145A1 quadrant reading.

m. Read and record the ACTL deflection (DEFL) and quadrant (QUAD) obtained on the PDFCS SECTION IN ORDER screen.

# M-11 PDFCS CONFIDENCE TESTS - CONTINUED

## M-11.1 Verification of Position and Direction Using Survey Data - Continued

M-11.1.4 Verification of Deflection and Quadrant - Continued

n. Compare deflections and quadrants obtained in steps k, l, and m. The tolerance between readings is ± 2 mils for both deflection and quadrant.

o. If PDFCS and PANTEL agree within the tolerance, the test is complete. Skip the next step.

p. If PDFCS and PANTEL do not agree with the tolerance, notify unit maintenance.

## M-11.2 Testing the Accuracy of the PDFCS Elevation.

**NOTE**

Before performing this test, ensure that the cannon assembly is properly equilibrated (para 3-8.2) to prevent tube elevation drift.

The PDFCS elevation accuracy should be tested whenever the trunnions have been leveled for optical fire control alignment test and measurements. It is suggested that a survey point be put in at the location of these tests for the purpose of proper initialization of the PDFCS.

This test is used to verify the PDFCS quadrant elevation and gunner's quadrant agree at all elevations. Perform the test as follows.

a. Initialize the PDFCS with the tube stowed in the travel lock.

b. When the Nav Subsystem is fully aligned, unstow tube, and recheck trunnion level using a plumbline.

c. Level the tube using a pretested gunner's quadrant on the machined surface just rear of the muzzle brake. Set the gunner's quadrant on the top (widest) surface with the feet aligned with the machined shoulder.

d. With the tube held at the level position, place the gunner's quadrant on the breech elevation seats. Measure and record breech correction.

e. Select FIRE COMMANDS from the SETUP AND INFORMATION menu. When FIRE COMMANDS menu is displayed, press USE ALL to display a FIRE MISSION screen.

f. Read and record ACTL QUAD on the FIRE MISSION screen. QUAD should be zero mils ± 0.5 mils.

g. If ACTL QUAD is not within tolerance, notify unit maintenance.

h. Set the scale of the gunner's quadrant to 100 mils plus the sum of the gunner's quadrant correction and the breech correction.

i. Place the gunner's quadrant on the breech seats. Elevate the tube (power or manual) until the bubble is centered.

j. Read and record the ACTL QUAD on the FIRE MISSION screen. If the difference between the ACTL QUAD and the tube elevation exceeds ± 0.5 mils, verify all settings. Record the difference.

k. Repeat steps h through j, adding 100 mils elevation each time, until maximum elevation is reached. Then decrease elevation in 100 mil increments and repeat measurements.

l. Compare all differences to the tolerance of ± 0.5 mils. If the reading at any elevation exceeds the tolerance, notify unit maintenance.

# APPENDIX N
# OPERATION OF AUTOMATIC FIRE CONTROL SYSTEM (AFCS) (VERSION 2 SOFTWARE)

## TABLE OF CONTENTS


| | Page |
|---|---|
| N-1 SCOPE | N-3 |
| N-2 GENERAL | N-3 |
| N-3 AFCS OPERATING MODES | N-3 |
| N-3.1 Training Mode | N-3 |
| N-3.2 Normal Operation Mode | N-4 |
| N-3.3 Maintenance Mode | N-4 |
| N-4 AFCS OPERATING CONTROLS AND INDICATORS | N-4 |
| N-5 DC POWER MESSAGES | N-50 |
| N-5.1 On Auxiliary Power | N-50 |
| N-5.2 Auxiliary Power Not Available | N-51 |
| N-5.3 Vehicle and Auxiliary Power OK | N-51 |
| N-6 AFCS INITIALIZATION | N-52 |
| N-6.1 System Power-Up | N-52 |
| N-6.2 Initializing | N-58 |
| N-6.3 Initialization After an Orderly Shutdown | N-111 |
| N-6.4 Initialization After a Catastrophic Failure | N-128 |
| N-7 AFCS TRAVEL MODE | N-130 |
| N-7.1 Movement | N-130 |
| N-7.2 Emplacement Fire Point/Fire Area | N-135 |
| N-8 AFCS FIRE MISSION | N-146 |
| N-8.1 Platoon Operation Center | N-148 |
| N-8.2 Firing Mission | N-150 |
| N-8.3 Ammunition Accountability | N-153 |
| N-8.4 End of Mission | N-155 |
| N-8.5 AFCS Emergency Mission | N-156 |
| N-8.6 Direct Fire Procedures Using AFCS | N-158 |
| N-8.7 System Menus | N-163 |
| N-9 AFCS AND PDIU FAULT DETECTION | N-201 |
| N-9.1 Power Up Built-In-Test (BIT) | N-201 |
| N-9.2 AFCS Status | N-204 |
| N-9.3 PDIU System Test | N-210 |
| N-9.4 Weapon Control Test | N-224 |
| N-9.5 Vehicle Motion Sensor Test | N-228 |
| N-9.6 Audio Alert Test | N-230 |
| N-9.7 Display Test | N-231 |
| N-9.8 Key and Switch Test | N-232 |
| N-9.9 Boresight Angle Entry Test | N-233 |
| N-9.10 Equivalent Full Charge (EFC) | N-233 |
| N-9.11 AFCS and PDIU Abbreviations | N-238 |
| N-9.12 Software Version/Configuration Display | N-242 |
| N-9.13 CPU Environment Display | N-244 |
| N-10 SYMPTOM INDEX | N-245 |
| N-11 AFCS CONFIDENCE TESTS | N-256 |
| N-11.1 Verification of Position and Direction Using Survey Data | N-256 |
| N-11.2 Testing the Accuracy of the AFCS Elevation | N-261 |

# LIST OF TABLES


| | Page |
|---|---|
| Table N-1 EL Panel | N-6 |
| Table N-2 Fire Mission Display | N-12 |
| Table N-3 Other Volley Display | N-16 |
| Table N-4 Section In Order Display | N-18 |
| Table N-5 Charge Displayed Based on Propellant Model | N-20 |
| Table N-6 U.S Shell/Fuze Combinations Cross Reference | N-21 |
| Table N-7 Urgent Messages | N-27 |
| Table N-8 High Priority Messages | N-28 |
| Table N-9 Low Priority Messages with Audio Alerts | N-31 |
| Table N-10 Low Priority Messages without Audio Alerts | N-43 |
| Table N-11 Power Up Status Display | N-56 |
| Table N-12 Network Configurations | N-63 |
| Table N-13 Paladin Fire Commands Entry Display | N-166 |
| Table N-14 Shell Model Numbers | N-174 |
| Table N-15 Fuze Model Numbers | N-175 |
| Table N-16 Record of Fire Select Target Display | N-183 |
| Table N-17 Record of Fire Display | N-184 |
| Table N-18 Record of Fire Data Display | N-190 |
| Table N-19 Weapon Control Test Display | N-225 |
| Table N-20 Weapon Control Test Status Messages | N-227 |
| Table N-21 Troubleshooting | N-246 |

## N-1 SCOPE.

This appendix contains the procedures and actions necessary for proper operation of the Automatic Fire Control System (AFCS) utilizing Version 2.0 Software.

## N-2 GENERAL.

The Automatic Fire Control System (AFCS) performs ballistic computations and weapon control, provides the interface between the AFCS computer and the radios, and stores data which is displayed/entered on the Display Unit (DU).

AFCS eliminates the use of optical fire control equipment in laying vehicle for deflection and elevation during indirect fire missions. The AFCS receives target information, calculates weapons position and automatically lays the gun tube. Calls for fire are accepted directly. Communication can be performed with any authorized source.

In addition AFCS contains a maintenance utility designed to perform initial troubleshooting of the system and a Built-In Training Device (Embedded Trainer) containing a tutorial on system operations.

## N-3 AFCS OPERATING MODES.

The AFCS functions are performed during three operating modes. These modes are Training, Normal Operations, and Maintenance.

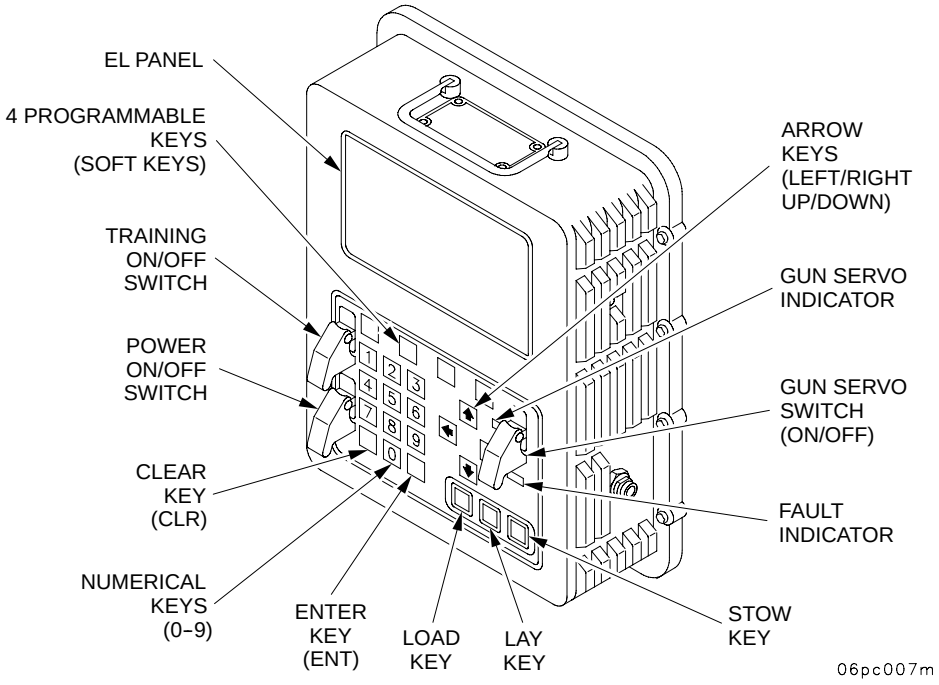


### N-3.1 Training Mode.

The AFCS has a Built-In Training Device (Embedded Trainer). This can be used as a tutorial device to train, maintain, improve, and evaluate crew efficiency/performance. This function allows for simulating Move and Fire Missions under a variety of battlefield scenarios. These include: Shoot Heavy, Move Heavy, Modified Balanced, as well as Degraded conditions (for AFCS), all without need for radio communications (AFCS simulates all radio communications so training can be accomplished without POC assets). In addition, the Embedded Trainer can be run from a Beginner's Tutorial option through a full scale scenario.

## N-3 AFCS OPERATING MODES - CONTINUED

### N-3.2 Normal Operation Mode.

During the normal operation mode, there are submodes which make up initializing the system navigation, emplacement, and firing the howitzer. These submodes are initialization, travel, and fire mission.

### N-3.3 Maintenance Mode.

This mode is designed to be used by the crew to do initial troubleshooting of a failure in the AFCS, isolate to an LRU and expedite repair, and view detailed software configuration information for each LRU/CPCI.

## N-4 AFCS OPERATING CONTROLS AND INDICATORS.

a. GUN SERVO Indicator Lamp. This amber indicator lamp will come on only during AFCS movement of the weapon. Additionally, the lamp stays on when the servos position the weapon on command LAY.

b. GUN SERVO ON/OFF Switch. This toggle switch enables gun servo units. Lifting guard and placing switch in ON position allows AFCS to control gun servo valves. (This is required for Gun Laying by AFCS, also needed for STOW and LOAD commands by AFCS.) Closing switch guard will automatically place switch in OFF position.

c. Arrow Keys (up/right/down and left). Pressing proper key will move highlighted area of display on EL Panel.

d. FAULT Indicator Lamp. This indicator lamp will come on when a failure has been detected by internal BIT of AFCS.

e. STOW Key. With GUN switch ON, pressing STOW key will automatically return gun to a position above the travel lock. (Final tube positioning to secure gun in travel lock must be done with gunner's/COS control handles.)

f. LAY Key. With GUN switch ON, pressing LAY key will automatically drive gun to Commanded (CMD) position by AFCS (in proper azimuth and elevation).

g. LOAD Key. With GUN switch ON, pressing LOAD key during high firing angles will automatically return gun to a preselected low elevation angle. This allows easier loading of gun.

(1) During Fire Mission. Pressing LOAD key during a Fire Mission will return gun to preselected load elevation and traverse gun to LAY position.

(2) Prior to Fire Mission. Pressing LOAD key prior to a Fire Mission (Section in Order) will return gun to preselected load elevation and traverse to Final Protective Fire (FPF) azimuth.

**NOTE**

If there is no FPF, the gun will traverse to the assigned center sector of fire.

h. KEYPAD (Numerals 0 through 9, CLR--clear, and ENT--enter keys). These keys are used for entering data. The CLR key is used to delete a numeric entry within the cursor field on EL Panel. The ENT key is used to insert a numeric entry into highlighted field on EL Panel.

**NOTE**

If DU POWER is switched to OFF, alignment data will have to be reentered at next power up. Navigation Restart is a 15-minute procedure. Closing switch guard will not place this switch in OFF position. Switch must be manually put in OFF position.

## N-4 AFCS OPERATING CONTROLS AND INDICATORS - CONTINUED

i. POWER ON/OFF Switch. Lifting the guard and placing switch in ON position powers up AFCS. System will then automatically perform self-test (BIT). After BIT, AFCS will control gun hydraulics when GUN ON/OFF switch is ON. At this time, some gun movement may occur. Do not power down DU (AFCS) when entering/exiting different modes. After AFCS has been powered down, the AFCS will power up and be operational in approximately 3-4 minutes.

j. TRAINING ON/OFF Switch. Lifting the guard and placing switch in ON position while AFCS is at the select operating mode menu allows operator to select Training Mode. (To exit Training Mode, either finish scenario and exit via appropriate softkey, or place TRAINING ON/OFF switch to OFF and select appropriate softkey to exit.)

k. Softkeys (four). Function of keys depends on menu being displayed (worked). Lowest display line identifies function.

l. Audio Alerts. There are two audio alerts that are sounded by the AFCS. Type 1 is a constant repetition of alternating high and low tones of .3 seconds each. Type 2 is a constant repetition of a single tone for .2 seconds with .6 seconds of quiet between each tone.

m. EL Panel. Displays various menus, operator alerts/warnings, messages and orders/commands. Information shown on the EL panel will vary, but format will remain the same. The format will show possible fire mission data fields, advisory messages, instructions, and commands. The EL panel data fields are numbered as follows:

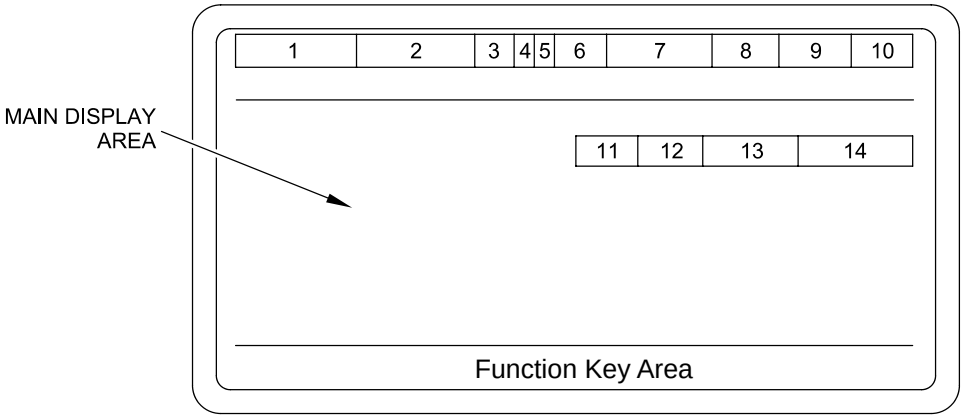


06pc088mf

## N-4 AFCS OPERATING CONTROLS AND INDICATORS - CONTINUED

**Table N-1. EL Panel**

| Field | Description | Conditions for display |
|---|---|---|
| 1 | Operational Mode Range/Values: | |
| | (1) NORMAL | (1) Indicates the normal operational mode was selected. |
| | (2) EMB TNG | (2) Indicates the training mode was selected. |
| | (3) MAINT | (3) Indicates maintenance mode was selected. |
| | (4) STE-X | (4) Indicates the STE-X has control of the system. |
| | (5) aaaaaaa | (5) Represents the Paladin software version and is only displayed on POWER UP STATUS. |
| | (6) Blank | (6) Indicates the software configuration data table is invalid. |
| | | Note: MV, NO MV and BAD MV shall be displayed in inverse video. |
| | (7) MV | (7) Displayed upon shot detect and a valid muzzle velocity was received from the MVS. |
| | (8) NO MV | (8) Displayed upon shot detect and no muzzle velocity was received from the MVS. |
| | (9) BAD MV | (9) Displayed upon shot detect and a muzzle velocity was received but the data was not valid. |
| 2a | Fire Mission 1 Indicator<br>Range/Values: | Note: The Paladin shall remove the appropriate Fire Mission Status upon receipt of EOM, Early EOM, Cancel Checkfire By Target, or Cancel Checkfire All. |
| | (1) FM1 | (1) FM1 displayed upon receipt of a valid fire mission and field 2a is blank.<br>Inverse video=active mission.<br>Normal video=non-active mission. |
| | (2) CK1 | (2) CK1 if the FM1 fire mission is in Checkfire Target Number and Paladin is not in Checkfire All.<br>Inverse video=active mission.<br>Normal video=non-active mission. |
| | (3) CHK | (3) CHK displayed in inverse video upon receipt of a valid Check Fire All. |
| | (4) Blank | (4) Blank indicates that none of the above conditions apply. |

## N-4 AFCS OPERATING CONTROLS AND INDICATORS - CONTINUED

**Table N-1. EL Panel - Continued**

| Field | Description | Conditions for display |
|---|---|---|
| 2b | Fire Mission 2 Indicator<br>Range/Values:<br>(1) FM2<br>(2) CK2<br>(3) ALL<br>(4) Blank | Note: The Paladin shall remove the appropriate Fire Mission Status upon receipt of EOM, Early EOM, Cancel Checkfire By Target, or Cancel Checkfire All.<br>(1) FM2 displayed upon receipt of a valid fire mission and field 2a is FM1 or CK1.<br>Inverse video=active mission.<br>Normal video=non-active mission.<br>(2) CK2 if the FM2 fire mission is in Checkfire Target Number and Paladin is not in Checkfire All.<br>Inverse video=active mission.<br>Normal video=non-active mission.<br>(3) ALL displayed in inverse video upon receipt of a valid Check Fire All.<br>(4) Blank indicates that none of the above conditions apply. |
| 3 | Move Order Indicator Range/ Values:<br>(1) MO<br>(2) Blank | Note: MO is displayed in inverse video.<br>(1) The Paladin has an active move order.<br>(2) The Paladin does not have an active move order. |
| 4 | Warning Message Indicator<br>Range/Value:<br>(1) W<br>(2) Blank | Note: W is displayed in inverse video.<br>(1) A warning message has been queued.<br>(2) There are no warning messages for the operator to view. |
| 5 | Received Message Indicator<br>Range/Values:<br>(1) R<br>(2) Blank | Note: R is displayed in inverse video.<br>(1) A received message has been queued.<br>(2) There are no messages for the operator to view. |

## N-4 AFCS OPERATING CONTROLS AND INDICATORS - CONTINUED

**Table N-1. EL Panel - Continued**

| Field | Description | Conditions for display |
|---|---|---|
| 6 | Align Time to Go Indicator<br>Range/Values:<br>(1) ZPT<br>(2) CMD<br>(3) POS<br>(4) 0-999<br>(5) Blank | Note: The data displayed below are listed in highest to lowest priority order.<br>(1) Indicates a ZUPT stop is required.<br>(2) This indicates that the AFCS has initiated a command sequence with the Navigation Device and the command sequence has not yet been completed.<br>(3) This indicates that the Navigation Device has requested a position update.<br>(4) This three digit number indicates the number of seconds remaining before navigation alignment is complete. When the alignment has proceeded to the point where the Paladin can be fired or moved, an alert will be provided to the operation indicating that it is okay to move or shoot. The align time will continue to be updated until the “nnn” value reaches zero. If the navigation device is not able to complete the alignment within two (2) seconds of the timer reaching zero, an error prompt will be presented indicating that a navigation device restart is required.<br>(5) Indicates that none of the above applies. |
| 7 | Function Status<br>Range/Values:<br>(1) N<br>(2) A<br>(3) C<br>(4) D<br>(5) W<br>(6) F<br>(7) Blank | (1) The Navigation Subsystem is - -, DEGRADED, or OUT.<br>(2) GPS is not supplying position data or DRUH is operating in the inertial mode; or GPS Data is invalid, EPE is greater than the good threshold, or GPS is unavailable while moving.<br>(3) The COMMO Subsystem is - -, DEGRADED, or OUT.<br>(4) Operator selects DRY FIRE from the Fire Mission Mode Selection Menu.<br>(5) The WPN Subsystem is - -, DEGRADED, or OUT.<br>(6) The IFS Subsystem is - -, OUT, DEG-MNT, DEG-GPS or DEG-BAT.<br>(7) All of the above subsystems are OK, or not in Dry Fire mode. |
| 8 | Load Key Status<br>Range/Values:<br>(1) LOAD<br>(2) Blank | Note: When Load is displayed in inverse video, the tube is within the load window.<br>(1) Indicates the load key is active.<br>(2) Indicates the load key is inactive. |
| 9 | Lay Key Status<br>Range/Values:<br>(1) LAY<br>(2) Blank | Note: When Lay is displayed in inverse video, the tube is in the Lay position.<br>(1) Indicates the Lay key is active.<br>(2) Indicates the Lay key is inactive. |

## N-4 AFCS OPERATING CONTROLS AND INDICATORS - CONTINUED

**Table N-1. EL Panel - Continued**

| Field | Description | Conditions for display |
|---|---|---|
| 10 | Stow Key Status<br>Range/Values:<br>(1) STOW<br>(2) Blank | Note: When Stow is displayed in inverse video, the tube is in the stow window.<br><br>(1) Indicates the Stow key is active.<br>(2) Indicates the Stow key is in active. |
| 11 | Mission Priority<br>Range/Value<br>(1) FPF<br>(2) PRI<br>(3) Blank | <br><br>(1) Indicates that the mission is a Final Protective Fire mission.<br>(2) Indicates that the mission is a Priority mission.<br>(3) Indicates that the mission is a Normal mission. |
| 12 | Mission Urgency<br>Range/Value<br>(1) DC<br>(2) TOT<br>(3) Blank | <br><br>(1) Indicates that the mission has an associated Danger Close status.<br>(2) Indicates that the AFCS is processing a Time On Target fire mission.<br>(3) Indicates that the AFCS has Normal urgency for this mission. |
| 13 | Tube Temperature Color Status<br>Range/Value<br>(1) COLD<br>(2) WARM<br>(3) HOT<br>(4) Blank | <br><br>(1) Indicates that the tube temperature is in a green status.<br>(2) Indicates that the tube temperature is in an amber status.<br>(3) Indicates that the tube temperature is in a red status.<br>(4) Indicates that the tube temperature is not available. |
| 14 | Safe Time in Tube Status<br>Range/Value<br>(1) mm<br><br><br><br><br><br>(2) Blank | <br><br>(1) Indicates the current safe time for around to be in the tube. Time is shown in minutes.<br>WARM 20 -- Safe time in tube 20 min<br>WARM 15 -- Safe time in tube 15 min<br>WARM 10 -- Safe time in tube 10 min<br>WARM 05 -- Safe time in tube 5 min<br>0 MIN -- Indicates the tube is HOT.<br>(2) Indicates that the tube is cold and there is no limit on the safe time in the tube |

## N-4 AFCS OPERATING CONTROLS AND INDICATORS - CONTINUED

The main display area contains the menu, information, and data entry areas required for operating the AFCS. The specific data shown in this area is dependent on the functions being performed. Various instructions and warnings will appear in this area, as necessary. Below are some of the displays and data requirements for the main display area.

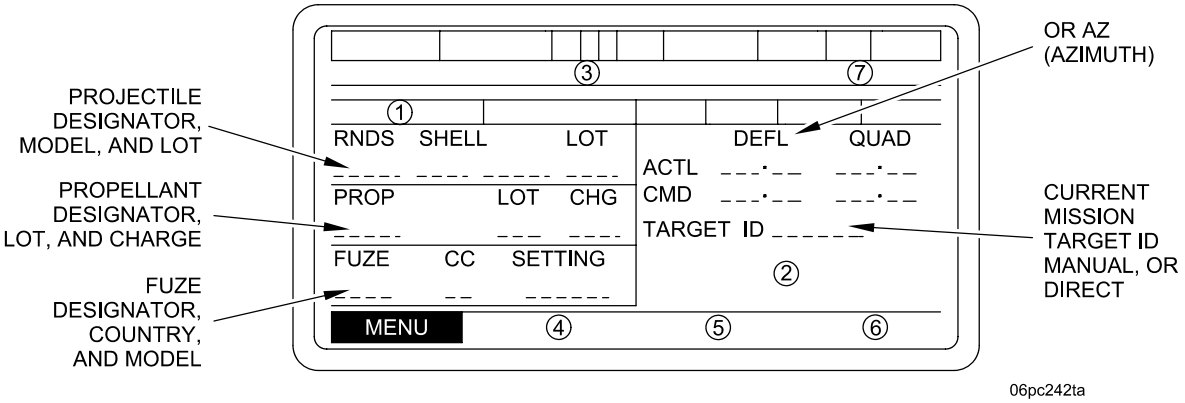


Listed below are the legal values for each field of FIRE MISSION display.

### NOTE

The 1/1, 1/2, and 2/2 data shall not be displayed for direct or FDC Fire Commands fire missions.

VLY / = current volley being displayed: 1/1, 1/2 or 2/2
RNDS = Number of rounds remaining to fire 1..99 or blank
SHELL = Shell model only (see Table N-6) or blank
SHELL LOT = A..Z or blank
PROP = Propellant model (see Table N-6) or blank
PROP LOT = A..Z or blank
CHG = Propellant charge designator (see Table N-5) or blank
DEFL or AZ = 0.0..6399.9 mils or blank
QUAD = −200.0..+1600.0 mils or blank
TARGET ID = Current mission target identification

## N-4 AFCS OPERATING CONTROLS AND INDICATORS - CONTINUED

The display data format for the FIRE MISSION screen follows in Table N-2.

### NOTE

- The alerts marked with an asterisk (*) will result in an “OK TO SHOOT?” YES, NO short error message to the AFCS operator.
- The operator must determine if mission is safe to shoot by notifying the FDC and either accept or abort as instructed.
- If the operator presses YES then the AFCS shall continue to process the fire mission.
- If the fire mission is a single aimpoint mission or if the violation applies to the entire mission and operator presses NO then the AFCS shall abort the fire mission.
- If the fire mission has multiple aimpoints and the operator presses NO then the AFCS shall transition to the next aimpoint.
- If the fire mission is a multiple phase fire mission and the violation occurs for only one phase, the violation and error message will be displayed before continuing the mission.
- If the fire mission has multiple aimpoints and the violation does not apply to every aimpoint, the violation and error message will be displayed for each aimpoint that has the violation, when the data for that aimpoint is displayed the first time.
- The “SAFE FIRE AREA VIOLATION” warning will be the first to appear. The additional information in this field shall remain until it is superseded or no longer applies.

## N-4 AFCS OPERATING CONTROLS AND INDICATORS - CONTINUED

**Table N-2. Fire Mission Display**

| Field | Description | Conditions for display |
|---|---|---|
| 1 | SHEAF INFORMATION<br>Range/Values:<br>(1) Blank<br>(2) SHEAF PT<br>(3) SHEAF X/XX | <br><br>(1) Fire mission is not a sheaf mission.<br>(2) This gun is participating in a multi-gun sheaf.<br>(3) This gun is participating in a single gun sheaf where X is the current aimpoint number and XX is the number of aimpoints. |
| 2 | Range/Values:<br>(1) Blank<br>(2) SAFE FIRE AREA VIOLATION*<br>(3) REMEMBER TO UPDATE INVENTORY<br>(4) WARNING TUBE IS NOT IN LAY POSITION<br>(5) TUBE MUST BE LAID MANUALLY<br>(6) CALL FDC IF ROUND IN TUBE<br>(7) PRESS SHOT OR CLEAR TO ACK CEASE-LOAD<br>(8) SECTOR OF FIRE VIOLATION*<br>(9) SITE VIOLATION*<br>(10) INSUFFICIENT AMMO SHELL/ FUZE/PROP*<br>(11) INSUFFICIENT AMMO SHELL/ FUZE*<br>(12) INSUFFICIENT AMMO SHELL/ PROP*<br>(13) INSUFFICIENT AMMO FUZE/ PROP*<br>(14) INSUFFICIENT AMMO SHELL* | <br>(1) Displayed when none of the following apply.<br>(2) The aimpoint or trajectory terminates outside the Safe Fire Area.<br>(3) Direct fire or FDC fire commands mission.<br>(4) The Weapon Controller is operational and the tube is not in the Lay window.<br>(5) The Weapon Controller is not operational.<br>(6) Awaiting tube clear and crew is not authorized to fire.<br>(7) The Paladin has received a CEASELOAD request.<br>(8) Gun-target line is outside the defined sector of fire.<br>(9) Firing parameters violate defined mask.<br>(10) Insufficient ammo quantities.<br>(11) Insufficient shell/fuze quantities.<br>(12) Insufficient shell/prop quantities.<br>(13) Insufficient fuze/prop quantities.<br>(14) Insufficient shell quantities. |

## N-4 AFCS OPERATING CONTROLS AND INDICATORS - CONTINUED

**Table N-2. Fire Mission Display - Continued**

| Field | Description | Conditions for display |
|---|---|---|
| | (15) INSUFFICIENT AMMO FUZE* | (15) Insufficient fuze quantities. |
| | (16) INSUFFICIENT AMMO PROP* | (16) Insufficient prop quantities. |
| | (17) MAX TUBE EL EXCEEDED* | (17) Computed QE exceeds the defined maximum elevation. |
| | (18) MINIMUM QE VIOLATED* | (18) The gun tube has violated the minimum QE as entered by the AFCS operator in the ENTER MINIMUM FIRING QE display. |
| 3 | Range/Values: | |
| | (1) FIRE WHEN READY | (1) Fire at will. |
| | (2) FIRE WHEN READY- FDC COMP | (2) Fire at will and FDC computed the fire mission. |
| | (3) UNDER VOICE ORDERS | (3) All commands are received via voice communications. |
| | (4) COMPUTING DO NOT LOAD | (4) The Paladin is computing or waiting for an operator response. |
| | (5) DO NOT LOAD | (5) Do not load mission. |
| | (6) DO NOT LOAD- FDC COMP | (6) Do not load mission computed by the FDC. |
| | (7) LOAD LAY THEN PRESS READY | (7) At My Command or Copperhead mission. |
| | (8) WAIT FOR COMMAND | (8) At My Command after ready. |
| | (9) WAIT FOR COMMAND- FDC COMP | (9) At My Command after ready and the FDC computed the mission. |
| | (10) WAIT NNN SECONDS | (10) Time on target, time to fire, or continuous fire interval mission and the operator must wait NNN seconds before firing the howitzer. |
| | (11) WAIT NNN SECONDS-FDC COMP | (11) Time on target, time to fire, or continuous fire interval mission, the FDC computed the mission and the operator must wait NNN seconds before firing the howitzer. |
| | (12) FIRE | (12) Command to fire. |
| | (13) FIRE-FDC COMP | (13) Command to fire and FDC computed the mission. |
| | (14) FPF END OF MISSION | (14) EOM or CEASELOAD received during FPF mission. |
| | (15) EARLY END OF MISSION | (15) EOM received before all rounds are fired. |
| | (16) CEASELOAD | (16) CEASELOAD received after load but before all rounds are fired. |

## N-4 AFCS OPERATING CONTROLS AND INDICATORS - CONTINUED

**Table N-2. Fire Mission Display - Continued**

| Field | Description | Conditions for display |
|---|---|---|
| 4 | SOFTKEY POSITION 1<br>Range/Values:<br>(1) Blank<br>(2) SHOT<br>(3) READY | (1) SHOT or READY do not apply.<br>(2) Used to initiate SHOT processing if not automatically performed when a round is fired.<br>(3) Used for At My Command fire missions, and notifies FDC the Paladin is ready to fire. |
| 5 | SOFTKEY POSITION 2<br>Range/Values:<br>(1) Blank<br>(2) CLEAR<br>(3) OTHER VLY | (1) CLEAR or OTHER VLY do not apply.<br>(2) The Paladin requires notification of tube clear.<br>(3) Other volley information is available for operator viewing. |
| 6 | SOFTKEY POSITION 3<br>Range/Values:<br>(1) Blank<br>(2) CHECK | (1) CHECK does not apply.<br>(2) For Paladin operator initiated Check Fire. |
| 7 | SOFTKEY POSITION 4<br>Range/Values:<br>(1) Blank<br>(2) ABORT<br>(3) EOM | (1) No active fire mission.<br>Note: If the operator presses the EOM or ABORT softkey, the Paladin will display the operator alerts “ARE YOU SURE?” “YES” “NO” for EOM, and “ABORT ARE YOU SURE?” “YES” “NO” for Abort.<br>(2) Fire mission other than direct or FDC Fire Commands is active.<br>(3) Direct or FDC Fire Commands fire mission is active. |

The following alerts shall appear if the operator presses the LOAD or LAY keys and the tube transitions across the minimum quadrant elevation:

“MINIMUM QE VIOLATED” “ACK” - The gun tube has violated minimum QE entered by the operator.

“MINIMUM QE NO LONGER VIOLATED” “ACK” - The gun tube no longer violates the minimum QE entered by the operator.

A type 2 audio alert shall be generated until the ACK key is pressed.

## N-4 AFCS OPERATING CONTROLS AND INDICATORS - CONTINUED

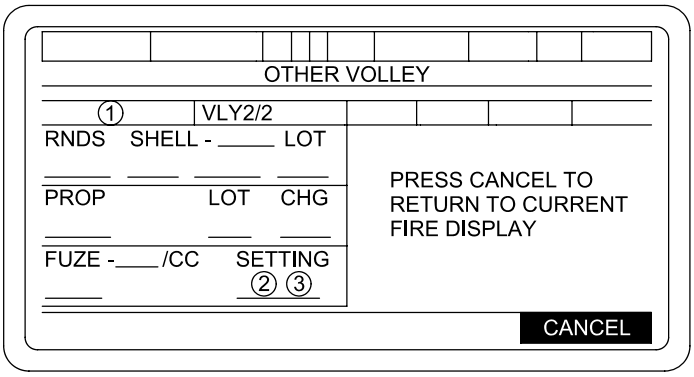


06pc243t

Listed below are the legal values for each field of the OTHER VOLLEY display:

RNDS = 1..99
SHELL = Shell model (see Table N-6).
SHELL LOT = A..Z
PROP = Propellant model (see Table N-6)
PROP LOT = A..Z
CHG = Propellant charge designator (see Table N-5)

## N-4 AFCS OPERATING CONTROLS AND INDICATORS - CONTINUED

**Table N-3. Other Volley Display**

| Field | Description | Conditions for display |
|---|---|---|
| 1 | SHEAF INFORMATION<br>Range/Values:<br>(1) Blank<br>(2) SHEAF PT<br>(3) SHEAF X/XX | <br><br>(1) Fire mission is not a sheaf mission.<br>(2) This gun is participating in a multi-gun sheaf.<br>(3) This gun is conducting a single gun sheaf where:<br>X = Current aimpoint number<br>XX = Number of aimpoints |
| 2 | FUZE MODE<br>Range/Values:<br>(1) PD<br>(2) DLY<br>(3) TI<br>(4) VT | <br><br>(1) Fuze Mode is Point Detonating or “Q”.<br>(2) Fuze Mode is Delay.<br>(3) Fuze Mode is Time.<br>(4) Fuze Mode is Variable Time. |
| 3 | FUZE TIME SETTING<br>Range/Values:<br>(1) NNN.N (where NNN.N is the time setting in seconds.)<br>(2) Blank | <br><br>(1) Fuze setting in seconds.<br>(2) If fuze mode is PD or DLY and shell is not XM982 or if an XM982 mission. |

## N-4 AFCS OPERATING CONTROLS AND INDICATORS - CONTINUED

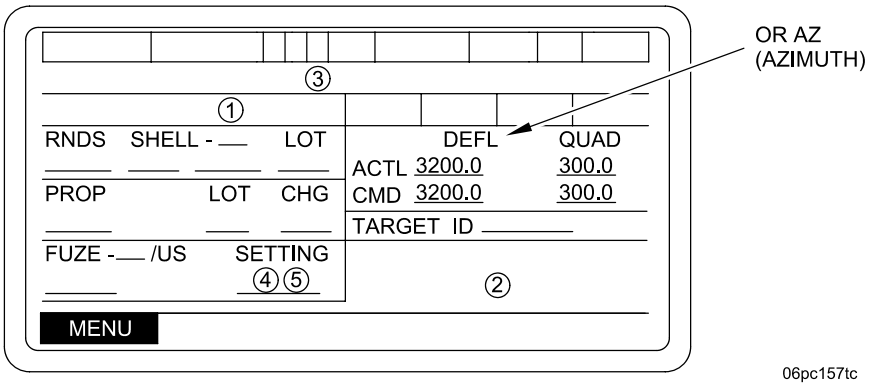


Listed below are the legal values for each field of the SECTION IN ORDER display:

RNDS = 0..99 or blank
SHELL = Shell model only (see Table N-6) or blank
SHELL LOT = A..Z or blank
PROP = Propellant model (see Table N-6) or blank
PROP LOT = A..Z or blank
PROP CHG = Propellant charge designator (see Table N-6) or blank
FUZE SETTING = Computed fuze setting, “PD” or “DELAY”
DEFL (or AZ) = 0.0..6399.9 mils
QUAD = -200.0..+1600.0 mils
TARGET ID = FPF/PRI target identification if a target exists; otherwise blank

The display data format for the SECTION IN ORDER screen follows in Table N-4.

## N-4 AFCS OPERATING CONTROLS AND INDICATORS - CONTINUED

**Table N-4. Section In Order Display**

| Field | Description | Conditions for display |
|---|---|---|
| 1 | FPF/PRI STATUS<br>Range/Value: | |
| | (1) BLANK | (1) Displayed when no FPF/PRI exists. |
| | (2) COMPUTING FPF/PRI | (2) Displayed while computing Fire MIssion data for FPF/PRI. |
| | (3) NO FPF/PRI EXISTS | (3) Displayed when the FPF/PRI has not been received. |
| | (4) UNABLE TO COMPUTE | (4) Displayed when the Paladin is unable to compute a ballistic solution for FPF/PRI. |
| | (5) SECTOR VIOLATION | (5) Displayed when the commanded deflection for FPF/PRI is outside the Sector of Fire. |
| | (6) MASK VIOLATION | (6) Displayed when the FPF/PRI Firing Data violates Mask. |
| | (7) INSUFFICIENT AMMO | (7) Displayed when the Ammo inventory is insufficient to support all phases of Fire Mission. |
| | (8) NO FUZE INVENTORY | (8) Displayed when the specified Fuze not in inventory. |
| | (9) NO PROJ INVENTORY | (9) Displayed when the specified Proj not in inventory. |
| | (10) NO PROP IN-VENTORY | (10) Displayed when the specified Prop not in inventory. |
| | (11) BAD PROJ LOT MODEL | (11) Displayed when the specified Proj Lot/Model conflict. |
| | (12) NO AMMO INV COMBO | (12) Displayed when the specified Ammo combination is not in inventory. |
| | (13) INVALID AMMO COMBO | (13) Displayed when the specified shell/fuze/prop is invalid. |
| | (14) INSUFFICIENT RANGE | (14) Displayed when the Paladin can not range the target. |
| | (15) NO SOLUTION | (15) Displayed when the Paladin can not compute a firing solution. |
| | (16) NOT FPF TYPE MISSION | (16) Displayed when in an active FPF (Adjust Fire), and an EOM/RAT is received with refinement data. |
| | (17) UNASSIGNED FPF/PRI | (17) Displayed when an FPF/PRI stored target is received and the fire mission is not assigned to this gun. |
| | (18) TARGET TOO CLOSE | (18) Displayed when an FPF/PRI has been established and Paladin has moved too close to range the target. |
| | (19) TUBE EL VIOLATION | (19) Displayed when an FPF/PRI stored target at a fire point or fire area, and a tube elevation violation has been detected during the mask result checks. |
| | (20) FDC COMP (INVERSE VIDEO) | (20) Displayed when an FPF/PRI stored target at a fire point or fire area, and the fire mission was computed by the FDC. |

## N-4 AFCS OPERATING CONTROLS AND INDICATORS - CONTINUED

**Table N-4. Section in Order Display- Continued**

| Field | Description | Conditions for display |
|---|---|---|
| 2 | SECTION IN ORDER STATUS<br>Range/Value:<br>(1) SECTION IN ORDER AT FIRE POINT<br>(2) SECTION IN ORDER AT IN ROUTE POINT<br>(3) SECTION IN ORDER WITHIN FIRE AREA | <br><br>(1) Arrived at a Fire Point.<br>(2) Arrived at any point short of Fire Point or Fire Area.<br>(3) Arrived within the Fire Area radius as defined in the Move Order. |
| 3 | CONTROL STATUS<br>Range/Values:<br>(1) DO NOT MOVE/ DO NOT LOAD<br>(2) DO NOT MOVE<br>(3) MOVES ALLOWED<br>(4) MOVES ALLOWED/DO NOT LOAD | <br><br>(1) Arrived at Fire Point and an FPF/PRI exists.<br>(2) Arrived at Fire Point and NO FPF/PRI exists.<br>(3) Arrived at Fire Area and and NO FPF/PRI exists.<br>(4) Arrived at Fire Area and an FPF/PRI exists. |
| 4 | FUZE MODE<br>Range/Values:<br>(1) PD<br>(2) DLY<br>(3) TI<br>(4) VT<br>(5) Blank | <br><br>(1) Fuze Mode is Point Detonating or “Q”.<br>(2) Fuze Mode is Delay.<br>(3) Fuze Mode is Time.<br>(4) Fuze Mode is Variable Time.<br>(5) If copperhead fire mission or an XM982 or M982 fire mission is in DNL status. |
| 5 | FUZE TIME SETTING<br>Range/Values:<br>(1) NNN.N (where NNN.N is the time setting in seconds.)<br>(2) NN PPP (where NNN.N is the fuze setting and PPP is the PRF Code)<br>(3) Blank | <br><br>(1) Fuze setting in seconds.<br>(2) Shell is M712.<br>(3) If fuze mode is PD or DLY and shell is not XM 982 or if an XM982 mission. |

## N-4 AFCS OPERATING CONTROLS AND INDICATORS - CONTINUED

**Table N-5. Charge Displayed Based on Propellant Model**

| Charge Displayed | Based on Propellant Model |
|---|---|
| 3G, 4G, 5G | M3, M3A1, M3A1BG, M3C2, DM62 |
| 3G, 4G, 5G, 6G | MLE56 |
| 6W, 7W, 8W, 9W, 9BW | MLE69 |
| 3W, 4W, 5W, 6W, 7W | M4A1, M4A2, M4C3, M4C4, DM42, DM42B1, NM23 |
| 8 | M119A1, NR13C1 |
| 7R | M119A2, M119A2BG, EBO-5, DM52 |
| 8R | M203 |
| 8S | M203A1 |
| 1L, 2L | M231 |
| 3H, 4H, 5H | M232, M232A1 |

# N-4 AFCS OPERATING CONTROLS AND INDICATORS - CONTINUED

## Table N-6. U.S Shell/Fuze Combinations Cross Reference

| Shell | | Fuze | | | | | | | | | | | | Propellants | | |
|---|---|---|---|---|---|---|---|---|---|---|---|---|---|---|---|---|
| | | Q | | D | | CP | | CPD | | TI | | VT | | | | |
| CC | Model | CC | Model | CC | Model | CC | Model | CC | Model | CC | Model | CC | Model | CC | Model | Charges |
| US | M718 | | | | | | | | | US | M577 | | | US | M3A1 | 3-5 |
| FCI 155-AR-A | | | | | | | | | | US | M577A1 | | | US | M4A1 | 3-7 |
| Supplement 4 | | | | | | | | | | US | M762 | | | US | M4A2 | 3-7 |
| | | | | | | | | | | US | M762A1 | | | US | M119A1 | 8 |
| | | | | | | | | | | | | | | US | M119A2 | 7R |
| | | | | | | | | | | | | | | US | M231 | 1-2 |
| | | | | | | | | | | | | | | US | M232 | 3-4 |
| | | | | | | | | | | | | | | US | M232A1 | 3-4 |
| US | M718A1 | | | | | | | | | US | M577 | | | US | M3A1 | 3-5 |
| FCI 155-AR-A | | | | | | | | | | US | M577A1 | | | US | M4A1 | 3-7 |
| Supplement 4 | | | | | | | | | | US | M762 | | | US | M4A2 | 3-7 |
| | | | | | | | | | | US | M762A1 | | | US | M119A1 | 8 |
| | | | | | | | | | | | | | | US | M119A2 | 7R |
| | | | | | | | | | | | | | | US | M231 | 1-2 |
| | | | | | | | | | | | | | | US | M232 | 3-4 |
| | | | | | | | | | | | | | | US | M232A1 | 3-4 |
| US | M741 | | | | | | | | | US | M577 | | | US | M3A1 | 3-5 |
| FCI 155-AR-A | | | | | | | | | | US | M577A1 | | | US | M4A1 | 3-7 |
| Supplement 4 | | | | | | | | | | US | M762 | | | US | M4A2 | 3-7 |
| | | | | | | | | | | US | M762A1 | | | US | M119A1 | 8 |
| | | | | | | | | | | | | | | US | M119A2 | 7R |
| | | | | | | | | | | | | | | US | M231 | 1-2 |
| | | | | | | | | | | | | | | US | M232 | 3-4 |
| | | | | | | | | | | | | | | US | M232A1 | 3-4 |
| US | M741A1 | | | | | | | | | US | M577 | | | US | M3A1 | 3-5 |
| FCI 155-AR-A | | | | | | | | | | US | M577A1 | | | US | M4A1 | 3-7 |
| Supplement 4 | | | | | | | | | | US | M762 | | | US | M4A2 | 3-7 |
| | | | | | | | | | | US | M762A1 | | | US | M119A1 | 8 |
| | | | | | | | | | | | | | | US | M119A2 | 7R |
| | | | | | | | | | | | | | | US | M231 | 1-2 |
| | | | | | | | | | | | | | | US | M232 | 3-4 |
| | | | | | | | | | | | | | | US | M232A1 | 3-4 |
| US | M692 | | | | | | | | | US | M577 | | | US | M3A1 | 3-5 |
| FCI 155-AR-A | | | | | | | | | | US | M577A1 | | | US | M4A1 | 3-7 |
| Supplement 3 | | | | | | | | | | US | M762 | | | US | M4A2 | 3-7 |
| | | | | | | | | | | US | M762A1 | | | US | M119A1 | 8 |
| | | | | | | | | | | | | | | US | M119A2 | 7R |
| | | | | | | | | | | | | | | US | M231 | 1-2 |
| | | | | | | | | | | | | | | US | M232 | 3-4 |
| | | | | | | | | | | | | | | US | M232A1 | 3-4 |
| US | M731 | | | | | | | | | US | M577 | | | US | M3A1 | 3-5 |
| FCI 155-AR-A | | | | | | | | | | US | M577A1 | | | US | M4A1 | 3-7 |
| Supplement 3 | | | | | | | | | | US | M762 | | | US | M4A2 | 3-7 |
| | | | | | | | | | | US | M762A1 | | | US | M119A1 | 8 |
| | | | | | | | | | | | | | | US | M119A2 | 7R |
| | | | | | | | | | | | | | | US | M231 | 1-2 |
| | | | | | | | | | | | | | | US | M232 | 3-4 |
| | | | | | | | | | | | | | | US | M232A1 | 3-4 |

# N-4 AFCS OPERATING CONTROLS AND INDICATORS - CONTINUED

## Table N-6. U.S Shell/Fuze Combinations Cross Reference - Continued

| Shell | | Fuze | | | | | | | | | | | | Propellants | | |
|---|---|---|---|---|---|---|---|---|---|---|---|---|---|---|---|---|
| | | Q | | D | | CP | | CPD | | TI | | VT | | | | |
| CC | Model | CC | Model | CC | Model | CC | Model | CC | Model | CC | Model | CC | Model | CC | Model | Charges |
| US | M712 | | | | | | | | | | | | | US | M3A1 | 4-5 |
| FCI 155-AS-A | | | | | | | | | | | | | | US | M4A1 | 4-7 |
| | | | | | | | | | | | | | | US | M4A2 | 4-7 |
| | | | | | | | | | | | | | | US | M119A1 | 8 |
| | | | | | | | | | | | | | | US | M119A2 | 7R |
| | | | | | | | | | | | | | | US | M231 | 2 |
| | | | | | | | | | | | | | | US | M232 | 3 |
| | | | | | | | | | | | | | | US | M232A1 | 3 |
| | | | | | | | | | | | | | | | | |
| US | M107DC | US | M557 | US | M557 | US | MK399 | US | MK399 | US | M564 | US | M728 | US | M3A1 | 3-5 |
| FCI 155-AM-B | | US | M739 | US | M739 | | | | | US | M582 | US | M732 | US | M4A1 | 3-7 |
| | | US | M739A1 | US | M739A1 | | | | | US | M582A1 | US | M732A2 | US | M4A2 | 3-7 |
| | | US | M782 | US | M782 | | | | | US | M767 | US | M782 | US | M119A1 | 8 |
| | | US | MK399 | US | MK399 | | | | | US | M767A1 | | | US | M119A2 | 7R |
| | | US* | M582 | | | | | | | US | M782 | | | US | M231 | 1-2 |
| | | US* | M582A1 | | | | | | | | | | | US | M232 | 3-4 |
| | | US* | M564 | | | | | | | | | | | US | M232A1 | 3-4 |
| | | US* | M767 | | | | | | | | | | | | | |
| | | US* | M767A1 | | | | | | | | | | | | | |
| | | US* | M728 | | | | | | | | | | | | | |
| | | US* | M732 | | | | | | | | | | | | | |
| | | US* | M732A2 | | | | | | | | | | | | | |
| | | | | | | | | | | | | | | | | |
| US | M449A1 | | | | | | | | | US | M565 | | | US | M3A1 | 3-5 |
| FCI 155-AM-B | | | | | | | | | | US | M577 | | | US | M4A1 | 3-7 |
| Supplement 6 | | | | | | | | | | US | M577A1 | | | US | M4A2 | 3-7 |
| | | | | | | | | | | US | M762 | | | US | M119A1 | 8 |
| | | | | | | | | | | US | M762A1 | | | US | M119A2 | 7R |
| | | | | | | | | | | | | | | US | M231 | 1-2 |
| | | | | | | | | | | | | | | US | M232 | 3-4 |
| | | | | | | | | | | | | | | US | M232A1 | 3-4 |
| | | | | | | | | | | | | | | | | |
| US | M483A1 | | | | | | | | | US | M577 | | | US | M3A1 | 3-5 |
| FCI 155-AR-A | | | | | | | | | | US | M577A1 | | | US | M4A1 | 3-7 |
| Supplement 1 | | | | | | | | | | US | M762 | | | US | M4A2 | 3-7 |
| | | | | | | | | | | US | M762A1 | | | US | M119A1 | 8 |
| | | | | | | | | | | | | | | US | M119A2 | 7R |
| | | | | | | | | | | | | | | US | M231 | 1-2 |
| | | | | | | | | | | | | | | US | M232 | 3-4 |
| | | | | | | | | | | | | | | US | M232A1 | 3-4 |
| | | | | | | | | | | | | | | | | |
| US | M795 | US | M557 | US | M557 | US | MK399 | US | MK399 | US | M564 | US | M732 | US | M3A1 | 3-5 |
| FCI 155-AR-A | | US | M739 | US | M739 | | | | | US | M582 | US | M732A2 | US | M4A1 | 4-7 |
| | | US | M739A1 | US | M739A1 | | | | | US | M582A1 | US | M782 | US | M4A2 | 4-7 |
| | | US | M782 | US | M782 | | | | | US | M767 | | | US | M119A1 | 8 |
| | | US | MK399 | US | MK399 | | | | | US | M767A1 | | | US | M119A2 | 7R |
| | | US* | M582 | | | | | | | US | M782 | | | US | M203 | 8R |
| | | US* | M582A1 | | | | | | | | | | | US | M203A1 | 8S |
| | | US* | M564 | | | | | | | | | | | US | M231 | 1-2 |
| | | US* | M767 | | | | | | | | | | | US | M232 | 3-5 |
| | | US* | M767A1 | | | | | | | | | | | US | M232A1 | 3-5 |
| | | US* | M732 | | | | | | | | | | | | | |
| | | US* | M732A2 | | | | | | | | | | | | | |

US*-TI or VT fuzes in the point detonating mode

# N-4 AFCS OPERATING CONTROLS AND INDICATORS - CONTINUED

## Table N-6. U.S Shell/Fuze Combinations Cross Reference - Continued

| Shell | | Fuze | | | | | | | | | | | | Propellants | | |
|---|---|---|---|---|---|---|---|---|---|---|---|---|---|---|---|---|
| | | Q | | D | | CP | | CPD | | TI | | VT | | | | |
| CC | Model | CC | Model | CC | Model | CC | Model | CC | Model | CC | Model | CC | Model | CC | Model | Charges |
| | | | | | | | | | | | | | | | | |
| US | M864 | | | | | | | | | US | M577 | | | US | M4A1 | 7 |
| FCI 155-AU-A | | | | | | | | | | US | M577A1 | | | US | M4A2 | 7 |
| | | | | | | | | | | US | M762 | | | US | M119A1 | 8 |
| | | | | | | | | | | US | M762A1 | | | US | M119A2 | 7R |
| | | | | | | | | | | | | | | US | M203 | 8R |
| | | | | | | | | | | | | | | US | M203A1 | 8S |
| | | | | | | | | | | | | | | US | M232 | 3-5 |
| | | | | | | | | | | | | | | US | M232A1 | 3-5 |
| | | | | | | | | | | | | | | | | |
| US | M864A1 | | | | | | | | | US | M577 | | | US | M4A1 | 7 |
| FCI 155-AU-A | | | | | | | | | | US | M577A1 | | | US | M4A2 | 7 |
| | | | | | | | | | | US | M762 | | | US | M119A1 | 8 |
| | | | | | | | | | | US | M762A1 | | | US | M119A2 | 7R |
| | | | | | | | | | | | | | | US | M203 | 8R |
| | | | | | | | | | | | | | | US | M203A1 | 8S |
| | | | | | | | | | | | | | | US | M232 | 3-5 |
| | | | | | | | | | | | | | | US | M232A1 | 3-5 |
| | | | | | | | | | | | | | | | | |
| US | M549 | US | M557 | US | M557 | US | MK399 | US | MK399 | US | M582 | US | M732A2 | US | M4A1 | 7 |
| FCI 155-AO-A | | US | M739 | US | M739 | | | | | US | M582A1 | US | M782 | US | M4A2 | 7 |
| | | US | M739A1 | US | M739A1 | | | | | US | M767 | | | US | M119A1 | 8 |
| | | US | M782 | US | M782 | | | | | US | M767A1 | | | US | M119A2 | 7R |
| | | US | MK399 | US | MK399 | | | | | US | M782 | | | US | M232 | 3-4 |
| | | US* | M582 | | | | | | | | | | | US | M232A1 | 3-4 |
| | | US* | M582A1 | | | | | | | | | | | | | |
| | | US* | M767 | | | | | | | | | | | | | |
| | | US* | M767A1 | | | | | | | | | | | | | |
| | | US* | M732A2 | | | | | | | | | | | | | |
| | | | | | | | | | | | | | | | | |
| US | M549A1 | US | M557 | US | M557 | US | MK399 | US | MK399 | US | M582 | US | M732A2 | US | M4A1 | 7 |
| FCI 155-AO-A | | US | M739 | US | M739 | | | | | US | M582A1 | US | M782 | US | M4A2 | 7 |
| | | US | M739A1 | US | M739A1 | | | | | US | M767 | | | US | M119A1 | 8 |
| | | US | M782 | US | M782 | | | | | US | M767A1 | | | US | M119A2 | 7R |
| | | US | MK399 | US | MK399 | | | | | US | M782 | | | US | M203 | 8R |
| | | US* | M582 | | | | | | | | | | | US | M203A1 | 8S |
| | | US* | M582A1 | | | | | | | | | | | US | M232 | 3-5 |
| | | US* | M767 | | | | | | | | | | | US | M232A1 | 3-5 |
| | | US* | M767A1 | | | | | | | | | | | | | |
| | | US* | M732A2 | | | | | | | | | | | | | |
| | | | | | | | | | | | | | | | | |
| US | M485A1 | | | | | | | | | US | M565 | | | US | M3A1 | 3-5 |
| FCI 155-AM-B | | | | | | | | | | US | M577 | | | US | M4A1 | 3-7 |
| Supplement 5 | | | | | | | | | | US | M577A1 | | | US | M4A2 | 3-7 |
| | | | | | | | | | | US | M762 | | | US | M119A1 | 8 |
| | | | | | | | | | | US | M762A1 | | | US | M119A2 | 7R |
| | | | | | | | | | | | | | | US | M231 | 1-2 |
| | | | | | | | | | | | | | | US | M232 | 3-4 |
| | | | | | | | | | | | | | | US | M232A1 | 3-4 |

US*-TI or VT fuzes in the point detonating mode

# N-4 AFCS OPERATING CONTROLS AND INDICATORS - CONTINUED

## Table N-6. U.S Shell/Fuze Combinations Cross Reference - Continued

| Shell | | Fuze | | | | | | | | | | | | Propellants | | |
|---|---|---|---|---|---|---|---|---|---|---|---|---|---|---|---|---|
| | | Q | | D | | CP | | CPD | | TI | | VT | | | | |
| CC | Model | CC | Model | CC | Model | CC | Model | CC | Model | CC | Model | CC | Model | CC | Model | Charges |
| | | | | | | | | | | | | | | | | |
| US | M485A2 | | | | | | | | | US | M565 | | | US | M3A1 | 3-5 |
| FCI 155-AM-B | | | | | | | | | | US | M577 | | | US | M4A1 | 3-7 |
| Supplement 5 | | | | | | | | | | US | M577A1 | | | US | M4A2 | 3-7 |
| | | | | | | | | | | US | M762 | | | US | M119A1 | 8 |
| | | | | | | | | | | US | M762A1 | | | US | M119A2 | 7R |
| | | | | | | | | | | | | | | US | M231 | 1-2 |
| | | | | | | | | | | | | | | US | M232 | 3-4 |
| | | | | | | | | | | | | | | US | M232A1 | 3-4 |
| | | | | | | | | | | | | | | | | |
| US | M898 | | | | | | | | | US | M577A1 | | | US | M3A1 | 3-5 |
| FCI 155-AR-A | | | | | | | | | | US | M762A1 | | | US | M4A1 | 3-7 |
| Supplement 7 | | | | | | | | | | | | | | US | M4A2 | 3-7 |
| | | | | | | | | | | | | | | US | M119A1 | 8 |
| | | | | | | | | | | | | | | US | M119A2 | 7R |
| | | | | | | | | | | | | | | US | M203 | 8R |
| | | | | | | | | | | | | | | US | M203A1 | 8S |
| | | | | | | | | | | | | | | US | M231 | 1-2 |
| | | | | | | | | | | | | | | US | M232 | 3-5 |
| | | | | | | | | | | | | | | US | M232A1 | 3-5 |
| | | | | | | | | | | | | | | | | |
| US | M110 (WP) | US | M557 | US | M557 | | | | | US | M564 | | | US | M3A1 | 3-5 |
| FCI 155-AM-B | | US | M739 | US | M739 | | | | | US | M582 | | | US | M4A1 | 3-7 |
| Supplement 1 | | US | M739A1 | US | M739A1 | | | | | US | M582A1 | | | US | M4A2 | 3-7 |
| | | US | M782 | US | M782 | | | | | US | M767 | | | US | M119A1 | 8 |
| | | US* | M582 | | | | | | | US | M767A1 | | | US | M119A2 | 7R |
| | | US* | M582A1 | | | | | | | US | M782 | | | US | M231 | 1-2 |
| | | US* | M564 | | | | | | | | | | | US | M232 | 3-4 |
| | | US* | M767 | | | | | | | | | | | US | M232A1 | 3-4 |
| | | US* | M767A1 | | | | | | | | | | | | | |
| | | | | | | | | | | | | | | | | |
| US | M110A1 (WP) | US | M557 | US | M557 | | | | | US | M564 | | | US | M3A1 | 3-5 |
| FCI 155-AM-B | | US | M739 | US | M739 | | | | | US | M582 | | | US | M4A1 | 3-7 |
| Supplement 1 | | US | M739A1 | US | M739A1 | | | | | US | M582A1 | | | US | M4A2 | 3-7 |
| | | US | M782 | US | M782 | | | | | US | M767 | | | US | M119A1 | 8 |
| | | US* | M582 | | | | | | | US | M767A1 | | | US | M119A2 | 7R |
| | | US* | M582A1 | | | | | | | US | M782 | | | US | M231 | 1-2 |
| | | US* | M564 | | | | | | | | | | | US | M232 | 3-4 |
| | | US* | M767 | | | | | | | | | | | US | M232A1 | 3-4 |
| | | US* | M767A1 | | | | | | | | | | | | | |
| | | | | | | | | | | | | | | | | |
| US | M110A2 (WP) | US | M557 | US | M557 | | | | | US | M564 | | | US | M3A1 | 3-5 |
| FCI 155-AM-B | | US | M739 | US | M739 | | | | | US | M582 | | | US | M4A1 | 3-7 |
| Supplement 1 | | US | M739A1 | US | M739A1 | | | | | US | M582A1 | | | US | M4A2 | 3-7 |
| | | US | M782 | US | M782 | | | | | US | M767 | | | US | M119A1 | 8 |
| | | US* | M582 | | | | | | | US | M767A1 | | | US | M119A2 | 7R |
| | | US* | M582A1 | | | | | | | US | M782 | | | US | M231 | 1-2 |
| | | US* | M564 | | | | | | | | | | | US | M232 | 3-4 |
| | | US* | M767 | | | | | | | | | | | US | M232A1 | 3-4 |
| | | US* | M767A1 | | | | | | | | | | | | | |
| | | | | | | | | | | | | | | | | |
| US | M116A1/HC | | | | | | | | | US | M565 | | | US | M3A1 | 3-5 |
| FCI 155-AM-B | | | | | | | | | | US | M577 | | | US | M4A1 | 3-7 |
| Supplement 2 | | | | | | | | | | US | M577A1 | | | US | M4A2 | 3-7 |
| | | | | | | | | | | US | M762 | | | US | M119A1 | 8 |
| | | | | | | | | | | US | M762A1 | | | US | M119A2 | 7R |
| | | | | | | | | | | | | | | US | M231 | 1-2 |
| | | | | | | | | | | | | | | US | M232 | 3-4 |
| | | | | | | | | | | | | | | US | M232A1 | 3-4 |

US*-TI or VT fuzes in the point detonating mode

# N-4 AFCS OPERATING CONTROLS AND INDICATORS - CONTINUED

## Table N-6. U.S Shell/Fuze Combinations Cross Reference - Continued

| Shell | | Fuze | | | | | | | | | | | | Propellants | | |
|---|---|---|---|---|---|---|---|---|---|---|---|---|---|---|---|---|
| | | Q | | D | | CP | | CPD | | TI | | VT | | | | |
| CC | Model | CC | Model | CC | Model | CC | Model | CC | Model | CC | Model | CC | Model | CC | Model | Charges |
| | | | | | | | | | | | | | | | | |
| US | M825 | | | | | | | | | US | M577 | | | US | M3A1 | 3-5 |
| FCI 155-AR-A | | | | | | | | | | US | M577A1 | | | US | M4A1 | 3-7 |
| Supplement 5 | | | | | | | | | | US | M762 | | | US | M4A2 | 3-7 |
| | | | | | | | | | | US | M762A1 | | | US | M119A1 | 8 |
| | | | | | | | | | | | | | | US | M119A2 | 7R |
| | | | | | | | | | | | | | | US | M231 | 1-2 |
| | | | | | | | | | | | | | | US | M232 | 3-4 |
| | | | | | | | | | | | | | | US | M232A1 | 3-4 |
| | | | | | | | | | | | | | | | | |
| US | M825A1 | | | | | | | | | US | M577 | | | US | M3A1 | 3-5 |
| FCI 155-AR-A | | | | | | | | | | US | M577A1 | | | US | M4A1 | 3-7 |
| Supplement 5 | | | | | | | | | | US | M762 | | | US | M4A2 | 3-7 |
| | | | | | | | | | | US | M762A1 | | | US | M119A1 | 8 |
| | | | | | | | | | | | | | | US | M119A2 | 7R |
| | | | | | | | | | | | | | | US | M203 | 8R |
| | | | | | | | | | | | | | | US | M203A1 | 8S |
| | | | | | | | | | | | | | | US | M231 | 1-2 |
| | | | | | | | | | | | | | | US | M232 | 3-5 |
| | | | | | | | | | | | | | | US | M232A1 | 3-5 |
| | | | | | | | | | | | | | | | | |
| US | DM702 | | | | | | | | | US | M762A1 | | | US | M232 | 3-5 |
| FCI 155-AR-A | | | | | | | | | | | | | | US | M232A1 | 3-5 |
| Supplement 9 | | | | | | | | | | | | | | | | |
| | | | | | | | | | | | | | | | | |
| US | DM702A1 | | | | | | | | | US | M762A1 | | | US | M232 | 3-5 |
| FCI 155-AR-A | | | | | | | | | | | | | | US | M232A1 | 3-5 |
| Supplement 9 | | | | | | | | | | | | | | | | |
| | | | | | | | | | | | | | | | | |
| US | 155BONUS | | | | | | | | | US | M577 | | | US | M232 | 3-5 |
| FCI 155-AU-A | | | | | | | | | | US | M577A1 | | | US | M232A1 | 3-5 |
| Supplement 2 | | | | | | | | | | US | M762 | | | | | |
| | | | | | | | | | | US | M762A1 | | | | | |
| | | | | | | | | | | | | | | | | |
| US | O155ACF1BO-NUS | | | | | | | | | US | M577 | | | US | M232 | 3-5 |
| FCI 155-AU-A | | | | | | | | | | US | M577A1 | | | US | M232A1 | 3-5 |
| Supplement 2 | | | | | | | | | | US | M762 | | | | | |
| | | | | | | | | | | US | M762A1 | | | | | |

## N-4 AFCS OPERATING CONTROLS AND INDICATORS - CONTINUED

Function Key Labels- This block is used to identify the function of the four softkeys.

Softkey messages and task actions are also displayed in this area to give the AFCS operator a means of keeping track of various AFCS related actions during Fire Control operation. Typical messages are shown below:

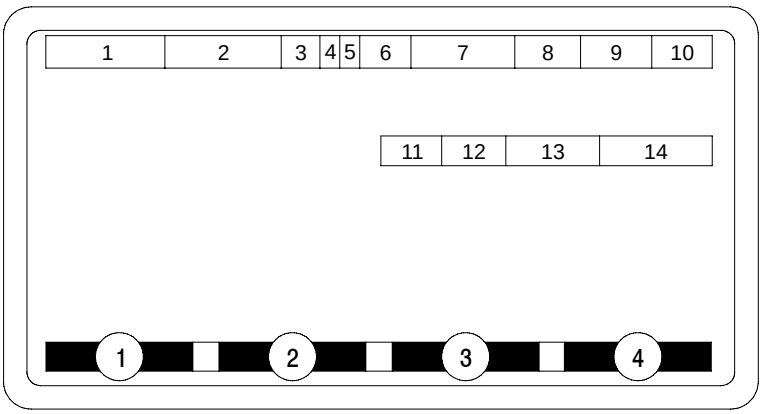


06pc088m

(1) Function Key 1, indicates what may appear in this field.
SELECT
NEXT MSG
+/-
MARK
ADJ
PREV
MENU
VERIFY
PREV

(2) Function Key 2, indicates what may appear in this field.
USE ALL
FINISHED
NEXT PAGE
+/-
FINISHED
USE LOCAL
FFE1
INVENTORY
ARRIVED
UPDATE EFC
CLEAR

(3) Function Key 3, indicates what may appear in this field.
CHECK
DELETE
YES
USE GPS
EMPLACE
STEERTO
FFE2
SEND
CLEAR
EXPECTED

(4) Function Key 4, indicates what may appear in this field.
CANCEL
ACK
EOM
NO
CONTINUE
MOVING
EXIT
ABORT

## N-4 AFCS OPERATING CONTROLS AND INDICATORS - CONTINUED

**Table N-7. Urgent Messages**

| Audio Alert | Operator Alert/Message | Cause | Removal Conditions | Operator Notes |
|---|---|---|---|---|
| Type 2 | “PALADIN CHECK-FIRED” “ACK” | The Paladin received a “Check Fire All” or “Check Fire By Target Number”. | Operator presses “ACK” | If the Paladin received a “CHECK FIRE ALL”, all fire missions will be stopped until a “CANCEL CHECK FIRE ALL” message is received from the FDC.<br>If the Paladin received a “CHECK FIRE TARGET”, the fire mission with the matching target number will be stopped until a “CANCEL CHECK FIRE TARGET” message is received with a matching target ID is received from the FDC. |

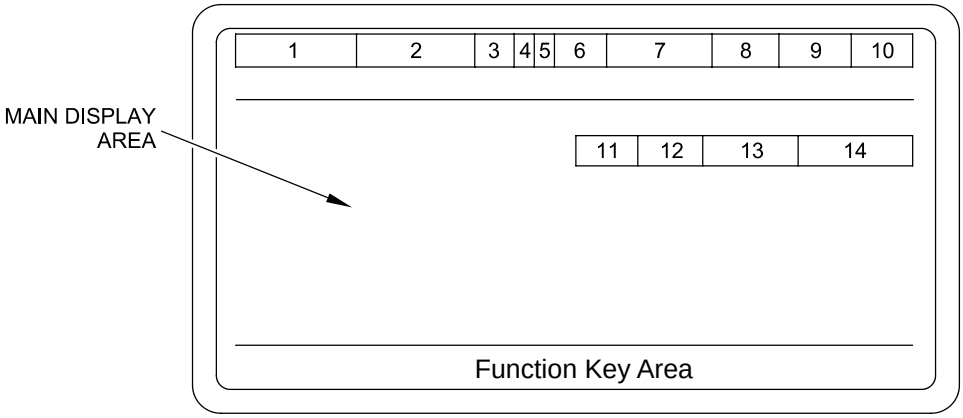


06pc088mf

## N-4 AFCS OPERATING CONTROLS AND INDICATORS - CONTINUED

**Table N-8. High Priority Messages**

| Audio Alert | Operator Alert/Message | Cause | Removal Conditions | Operator Notes |
|---|---|---|---|---|
| Type 1 | “FIRE” | The Paladin received a “Fire” command (At My Command) or is in a Time On Target Mission, and the TOT countdown timer reaches 0. | “SHOT” is detected (softkey, DRUH, or MVS), operator aborts, Checkfire by Target Number, Check-fire All, or End Of Mission is received. | Fire the mission. |
| Type 2 | “ALIGN ABORTED RESTART REQD” “ACK” | The DRUH was unable to complete align. | Operator presses “ACK” | NOTE: During the first 90 seconds of align, motion or performing a VMS test may cause the DRUH to abort.<br><br>Perform a NAV restart. |
| Type 2 | “AUX BATTERY NOT CONNECTED” “ACK” | AUX battery isn’t connected or a PCU failure has occurred. | Operator presses “ACK” | On PCU, check AUX Battery connections and circuit breakers. |
| Type 2 | “AUX POWER LOW” “ACK” | The PCU reports vehicle power voltage is getting low and the AUX battery can’t support operation. | Operator presses “ACK” | Start vehicle to charge batteries. |
| Type 2 | “FIRE MISSION RCVD” “ACCEPT” “REJECT” | A Fire Mission was received while AFCS was in Maintenance mode. | Operator presses “ACCEPT” or “REJECT” | Acceptance of the Fire Mission terminates all maintenance functions and continues the Fire Mission. Rejection of the Fire Mission forces a tube clear, aborts the Fire Mission, and continues maintenance functions. |
| Type 2 | “FIRE MISSION RECEIVED” “ACK” | A new Fire Mission (not operator initiated) or a continuation of an active mission was received. | Operator presses “ACK” | AFCS transitions to the Fire Mission screen and continues Fire Mission Processing. |
| Type 2 | “MOVE MISSION RECEIVED” “ACK” | A move mission was received from the FDC. | Operator presses “ACK” | AFCS transitions to the Move Order screen and continues move mission processing. |
| Type 2 | “MOVE ORDER RECEIVED” “ACK” | A Move Order was received. | Operator presses “ACK” | Start the Move Order. |

## N-4 AFCS OPERATING CONTROLS AND INDICATORS - CONTINUED

**Table N-8. High Priority Messages - Continued**

| Audio Alert | Operator Alert/Message | Cause | Removal Conditions | Operator Notes |
|---|---|---|---|---|
| Type 2 | "NAV CONFLICT-UPDATE NAV" "ACK" | An unexplained and unreasonable change in DRUH position was detected. | Operator presses "ACK" | Perform a NAV Update. |
| Type 2 | "NAV EXCESSIVE RATE RESTART REQ" "ACK" | Excessive vehicle motion caused the DRUH to lose accuracy. | Operator presses "ACK" | Perform a NAV Restart. |
| Type 2 | "NAV OUT, DRU BIT FAIL" "ACK" | The DRUH reports a BIT failure. | Operator presses "ACK" | Cycle AFCS power. If the fault does not clear, notify unit maintenance. |
| Type 2 | "NAV OUT, DRU DISCONNECT" "ACK" | The ACU has lost communications with the DRUH. | Operator presses "ACK" | If DRUH does not "hum", check power cable connections and PCU circuit breakers. Perform a System Restart when power is restored. If DRUH "hums", check W-17A connections and perform a NAV Restart. If problem persists, notify unit maintenance. |
| Type 2 | "NAV OUT, DRU INERTIAL FAIL" "ACK" | DRUH BIT reported Inertial Fail. | Operator presses "ACK" | Cycle AFCS power. If the problem persists, notify unit maintenance. |
| Type 2 | "NAV OUT, DRU OP FAIL" "ACK" | ACU detected abnormal DRUH data. | Operator presses "ACK" | NOTE: During the first 90 seconds of a NAV Restart, performing a VMS test may trigger a DRU OP FAIL.<br><br>Perform a System Restart. |
| Type 2 | "NAV OUT, NSP DISCONNECT" "ACK" | Displayed when the Critical Error signal is generated within the software. | Operator presses "ACK" | Check NAV connections and perform a NAV Restart. |
| Type 2 | "NAV OUT, NSP POWER UP BIT" "ACK" | The ACU NAV subsystem interface has failed or has not initialized correctly. | Operator presses "ACK" | Perform a System Restart. If failure repeats, notify unit maintenance. |
| Type 2 | "ON AUX POWER START VEHICLE" "ACK" | PCU reports operating on AUX battery because vehicle voltage is too low. | Operator presses "ACK" | Start vehicle engine to charge batteries. |

## N-4 AFCS OPERATING CONTROLS AND INDICATORS - CONTINUED

**Table N-8. High Priority Messages - Continued**

| Audio Alert | Operator Alert/Message | Cause | Removal Conditions | Operator Notes |
|---|---|---|---|---|
| Type 2 | “OVERRIDE AZ LIMITS” “YES” “NO” | The tube has exceeded traverse limits when its position is +/-45 degrees (+/-3 degrees) from the defined stow azimuth. | Operator selects “YES” or “NO” | If YES is selected, the Lay key will continue to function while holding the OVERRIDE switch. The override will be in effect until the tube is within traverse limits. If NO is selected, the Lay key will no longer function. If NO is selected in error, the howitzer will have to be layed with either the hand wheels or the power control handles. |
| Type 2 | “POWER FAILURE SHUTDOWN” | PCU reports vehicle and AUX battery voltages are too low to sustain operation. | No operator action required. | The AFCS will shutdown automatically. |
| Type 2 | “VEHICLE AND AUX POWER OK” “ACK” | PCU reports both vehicle and back up battery are ok after a problem has been corrected. | Operator presses “ACK” | No further action is required. |

## N-4 AFCS OPERATING CONTROLS AND INDICATORS - CONTINUED

**Table N-9. Low Priority Messages with Audio Alerts**

| Audio Alert | Operator Alert/Message | Cause | Removal Conditions | Operator Notes |
|---|---|---|---|---|
| Type 2 | “BORESIGHT UPDT RJTD VEH MOVING” “ACK” | Motion detected during DRUH boresight angle entry. | Operator presses “ACK” | Ensure Paladin is stationary and re-enter boresight angles. |
| Type 2 | “CC MISMATCH” “ACK“ | Country Codes (CC) for the selected shells and propellants do not match. | Operator presses “ACK” | Resolve the country code mismatch between the projectile and propellant. |
| Type 2 | “CHK DATA BASE BAD DATA DETECTED” “ACK” | The value of one or more NVM data elements was found to be out of range during initialization. | Operator presses “ACK” | The AFCS discards NVM data and initializes the database to default values. The operator must manually enter all NVM data (i.e. ammo, location, prop temp, etc.). |
| Type 2 | “CLOCK UPDATE RJTD FM ACTIVE” “ACK’ | A Date/Time Update was attempted while a Fire Mission was active. | Operator presses “ACK” | Complete or abort the Fire Mission before changing Date/Time settings. |
| Type 2 | “COMMO OUT” “ACK” | A known operational CP has failed. | Operator presses “ACK” | Cycle AFCS power. |
| Type 2 | “DEPARTED FIRE AREA RADIUS” “ACK” | The Paladin leaves the Fire Area without a current move order. | Operator presses “ACK” | No further action required. |
| Type 2 | “DIRECT FIRE RJTD TGT COMP ERR” “ACK” | A value greater than (-) 400 is entered in the Up/Down selection of the Direct Fire Display. | Operator presses “ACK” | Verify target information and re-enter as needed. |
| Type 2 | “DRU CONNECTED” “ACK” | The PDCU has re-established communication with the DRUH. | Operator presses “ACK” | No further action required. |
| Type 2 | “DRU NO LONGER OVERTEMP” “ACK” | The DRUH is no longer in an Over-temp state. | Operator presses “ACK” | If in an active Fire Mission, this message will be pended until EOM. |
| Type 2 | “DRU OVERTEMP” “ACK” | The DRUH is too hot and may turn off to protect itself. | Operator presses “ACK” | If in an active Fire Mission, this message will be pended until EOM. |

## N-4 AFCS OPERATING CONTROLS AND INDICATORS - CONTINUED

**Table N-9. Low Priority Messages with Audio Alerts - Continued**

| Audio Alert | Operator Alert/Message | Cause | Removal Conditions | Operator Notes |
|---|---|---|---|---|
| Type 2 | "DTG OUT OF SYNC-URN NNNNNNNN" "ACK" | A subscriber within the subscriber table has a DTG that is not in sync with the Paladin. | Operator presses "ACK" | Note: NNNNNNNN represents the URN of the subscriber that is out of sync with the Paladin.<br><br>The operator must verify the current DTG. |
| Type 2 | "ENTERED FIRE AREA RADIUS" "ACK" | The Paladin is in a current move order and enters the Fire Area. | Operator presses "ACK" | Select a suitable fire position, orient Paladin on the azimuth of fire, and conduct arrival processing. |
| Type 2 | "FIRE CONTROL ALIGN REQUIRED" "ACK" | Boresight angles have not been stored or those stored in PDCU and DRUH differ. | Operator presses "ACK" | Perform Fire Control Align. |
| Type 2 | "FIRE CONTROL INFO RCVD" "ACK" | The operator has entered boresight angles into the AFCS. | Operator presses "ACK" | No further action required. |
| Type 2 | "FIRE MISSION RJTD FM ACTIVE" "ACK" | A Direct Fire mission was attempted while in an active Fire Mission. | Operator presses "ACK" | Wait until Fire Mission is ended before attempting a Direct Fire mission. |
| Type 2 | "FIRE MISSION RJTD IN CHECKFIRE" "ACK" | A Direct Fire mission was attempted while in Checkfire Target or Checkfire All. | Operator presses "ACK" | Wait until Cancel Checkfire Target or Cancel Checkfire All is received before attempting a Direct Fire mission. |
| Type 2 | "FIRE MISSION RJTD NAV NOT INIT" "ACK" | A Direct Fire mission was attempted before the "OK TO MOVE OR SHOOT" message was displayed. | Operator presses "ACK" | Verify the NAV subsystem has been initialized with a NAV Update or Restart and wait for the "OK TO MOVE OR SHOOT" message before initiating a Direct Fire mission. |
| Type 2 | "FIRE MISSION RJTD TGT COMP ERR" "ACK" | Calculated target altitude is below 400 meters based on entries in the Direct Fire Display. | Operator presses "ACK" | Verify target information and re-enter as needed. |
| Type 2 | "GPS ANTENNA FAULT" "ACK" | A GPS Antenna Fault was detected. | Operator presses "ACK" | Check cable connections between GPS receiver and antenna. If in an active Fire Mission, this message will be pended until EOM. |

## N-4 AFCS OPERATING CONTROLS AND INDICATORS - CONTINUED

**Table N-9. Low Priority Messages with Audio Alerts - Continued**

| Audio Alert | Operator Alert/Message | Cause | Removal Conditions | Operator Notes |
|---|---|---|---|---|
| Type 2 | "GPS ANTENNA OK" "ACK" | A GPS Antenna Fault was corrected. | Operator presses "ACK" | If in an active Fire Mission, this message will be pended until EOM. |
| Type 2 | "GPS CONNECTED" "ACK" | The DRUH re-established communications with the GPS receiver. | Operator presses "ACK" | If in an active Fire Mission, this message will be pended until EOM. |
| Type 2 | "GPS OPERATIONAL" "ACK" | A GPS failure was corrected. | Operator presses "ACK" | If in an active Fire Mission, this message will be pended until EOM. |
| Type 2 | "GPS OUT-DISCONNECTED" "ACK" | The DRUH lost communications with the GPS receiver. | Operator presses "ACK" | Check power and signal cable connections to the GPS receiver and verify the receiver is turned on. If in an active Fire Mission, this message will be pended until EOM. |
| Type 2 | "GPS OUT-FAILED" "ACK" | The GPS receiver reported a BIT failure. | Operator presses "ACK" | Disconnect data cable from GPS receiver and run GPS receiver self test. If in an active Fire Mission this message will be pended until EOM. |
| Type 2 | "GPS UNKEYED" "ACK" | The GPS receiver doesn't have a valid crypto key loaded. | Operator presses "ACK" | Have a valid crypto key loaded into the GPS receiver. If in an active Fire Mission, this message will be pended until EOM. |
| Type 2 | "GUN SWITCH FAULT" "ACK" | Hardware BIT detected a GUN (servo) switch fault. | Operator presses "ACK" | Check to see if the GUN SWITCH is in the up (on) position. If YES, place the Gun Switch in the down (off) position and perform a system restart. If the Gun Switch is in the down (off) position, notify unit maintenance. |
| Type 2 | "INP/GPS ALT EXCESSIVE" "ACK" | Altitude in a NAV Update or Restart deviates too much from the current GPS altitude. | Operator presses "ACK" | Verify current location, re-enter, and perform NAV Update or Restart. A second update may be accepted if the entered values remain the same. |
| Type 2 | "INP/GPS ALT REJECTED" "ACK" | Altitude in a NAV Update or Restart deviates too much from the current GPS altitude. | Operator presses "ACK" | Verify current location, re-enter, and perform NAV Update or Restart. A second update will be rejected if the entered values remain the same. |
| Type 2 | "INP/GPS DELTA TOO LARGE" "ACK" | The DRUH returned an incorrect response to a NAV Update or Restart. | Operator presses "ACK" | Cycle AFCS power. |

## N-4 AFCS OPERATING CONTROLS AND INDICATORS - CONTINUED

**Table N-9. Low Priority Messages with Audio Alerts - Continued**

| Audio Alert | Operator Alert/Message | Cause | Removal Conditions | Operator Notes |
|---|---|---|---|---|
| Type 2 | “INP/GPS N/E EXCESSIVE” “ACK” | Horizontal position in a NAV Update or Restart deviates too much from the current GPS position. | Operator presses “ACK” | Verify current location, re-enter, and perform NAV Update or Restart. A second update may be accepted if the entered values remain the same. |
| Type 2 | “INP/GPS N/E REJECTED” “ACK” | Horizontal position in a NAV Update or Restart deviates too much from the current GPS position. | Operator presses “ACK” | Verify current location, re-enter, and perform NAV Update or Restart. A second update will be rejected if the entered values remain the same. |
| Type 2 | “INP/NAV ALT EXCESSIVE” “ACK” | Entered altitude value exceeds the current DRUH acceptance criteria. | Operator presses “ACK” | Verify current location and perform NAV Update. If the values remain the same, the DRUH will accept the update the second time. |
| Type 2 | “INP/NAV ALT REJECTED” “ACK” | Entered altitude value exceeds the current DRUH acceptance criteria. | Operator presses “ACK” | Verify current location and perform NAV Update. If the values remain the same, the DRUH will accept the update the second time. |
| Type 2 | “INP/NAV N/E EXCESSIVE” “ACK” | Entered northing and easting values are outside the current DRUH acceptance criteria. | Operator presses “ACK” | Verify current location and perform NAV Update. If the values remain the same, the DRUH will accept the update the second time. |
| Type 2 | “INP/NAV N/E REJECTED” “ACK” | Entered northing and easting values are outside the current DRUH acceptance criteria. | Operator presses “ACK” | Verify current location and perform NAV update. If the values remain the same, the DRUH will reject the second update. |
| Type 2 | “INVALID OPERATIONAL MODE” “ACK” | Selection of an invalid operational mode (Normal Operations, Maintenance, Training) was attempted. | Operator presses “ACK” | No further action required. |
| Type 2 | “INVALID SOFTWARE CONFIGURATION” “ACK” | The software configuration is not valid. | Operator presses “ACK” | The AFCS will continue to the Normal Operations mode selection screen. |
| Type 2 | “MANUAL COMMANDS RJTD CHECKFIRE” “ACK” | A Manual Commands Fire Mission was received while in CHECKFIRE. | Operator presses “ACK” | NOTE: This warning will be displayed only if the CHECKFIRE originated from the Paladin.<br><br>No further action required. |

## N-4 AFCS OPERATING CONTROLS AND INDICATORS - CONTINUED

**Table N-9. Low Priority Messages with Audio Alerts - Continued**

| Audio Alert | Operator Alert/Message | Cause | Removal Conditions | Operator Notes |
|---|---|---|---|---|
| Type 2 | "MANUAL COMMANDS RJTD FM ACTIVE" "ACK" | A Manual Commands Fire mission was received while in an active Fire Mission. | Operator presses "ACK" | No further action required. |
| Type 2 | "MINIMUM QE NO LONGER VIOLATED" "ACK" | The tube returned above Min QE after the "Minimum QE Violated" warning was displayed. | Operator presses "ACK" | No further action required. |
| Type 2 | "MINIMUM QE VIOLATED" "ACK" | While in an active Fire Mission and Load or Lay command forces tube below Min QE and volley is not Direct Fire. | Operator presses "ACK" | Determine if mission is safe to shoot and accept or abort as needed. |
| Type 2 | "MVS OUT or MVS BUS OUT" "ACK" | If the MVS was operational and either the data in the status message indicates a failure or the AFCS and MVS are no longer communicating, this alert will be displayed to the operator. | Operator presses "ACK" | The Paladin will no longer record MVV data. All MVVs will have to be received from FDC to be applied to Paladin computed Fire Missions. |
| Type 2 | "MVV DATABASE FULL, " "ACK" | The MVV database is full and the next MVV measured will be lost. | Operator presses "ACK" | If the operator takes no action to eliminate the saturation condition, velocity data from the MVS will be discarded until the condition is eliminated. Operator must delete MVV entries. |
| Type 2 | "MVV DB ALMOST FULL" "ACK" | The MVV database is 95% full. | Operator presses "ACK" | If the operator takes no action to eliminate the saturation condition, velocity data from the MVS will be discarded until the condition is eliminated. Operator must delete MVV entries. |
| Type 2 | "MVV DB FULL-DATA LOST" "ACK" | A MVV was recorded but could not be stored in database and was lost. | Operator presses "ACK" | If the operator takes no action to eliminate the saturation condition, velocity data from the MVS will be discarded until the condition is eliminated. Operator must delete MVV entries. |

## N-4 AFCS OPERATING CONTROLS AND INDICATORS - CONTINUED

**Table N-9. Low Priority Messages with Audio Alerts - Continued**

| Audio Alert | Operator Alert/Message | Cause | Removal Conditions | Operator Notes |
|---|---|---|---|---|
| Type 2 | “NAV POS UPDATE NO LONGER REQ” “ACK” | The DRUH accepted a NAV update or valid GPS aiding data. | Operator presses “ACK” | No further action required. |
| Type 2 | “NAV POS UPDATE REQUESTED” “ACK” | The DRUH requests a Position Update to restore accuracy. | Operator presses “ACK” | Perform a NAV Update. |
| Type 2 | “NAV RESTART RJTD FM ACTIVE” “ACK” | A NAV Restart is pending and a fire mission is activated before the restart is executed. | Operator presses “ACK” | Complete or abort the Fire Mission and perform a NAV Restart. |
| Type 2 | “NAV RESTART RJTD NAV OUT” “ACK” | NAV subsystem fails before a pending NAV Restart is executed. | Operator presses “ACK” | Cycle AFCS power. |
| Type 2 | “NAV RESTART RJTD VEH MOVING” “ACK” | Motion detected while DRUH was processing a NAV restart. | Operator presses “ACK” | Ensure vehicle is stationary and perform NAV Restart. |

## N-4 AFCS OPERATING CONTROLS AND INDICATORS - CONTINUED

**Table N-9. Low Priority Messages with Audio Alerts - Continued**

| Audio Alert | Operator Alert/Message | Cause | Removal Conditions | Operator Notes |
|---|---|---|---|---|
| Type 2 | "NET BUSY XXXXXX" "RETRY" "NO RETRY" | This message will be displayed for *AN*Y Paladin transmitted message (i.e. AMMO, REQ AMMO, CHECKFIRE, FREE TEXT, VEH STS, REQ VEH STS, REQ INIT, SITE DATA, REQ SITE, REQ MOV ORD, MTO TOF, MTO DENY, MVV, REQ MVV, READY, ROUND COMP, SHOT, SPLASH, TARGET FILE, GEOMETRIES, RECORD OF FIRE, QUERY, POSITION REPORT and UTE BAT) if Net Busy (more than 55 messages in progress) is detected. | Operator selects "RETRY" or "NO RETRY" | If "RETRY" is selected, the AFCS will attempt to retransmit the message. If "NO RETRY" is selected, the attempt to retransmit will be aborted. |
| Type 2 | "NET CONFG UPDTE RJTD FM ACTIVE" "ACK" | A Network Configuration Update is pending and a fire mission is received before the network access parameters have been processed. | Operator presses "ACK" | Complete or abort the Fire Mission before changing Network settings. |
| Type 2 | "NETWORK COMMO OUT" "ACK" | A previously operational Radio Network Controller has failed. | Operator presses "ACK" | Perform a System Restart. |

## N-4 AFCS OPERATING CONTROLS AND INDICATORS - CONTINUED

**Table N-9. Low Priority Messages with Audio Alerts - Continued**

| Audio Alert | Operator Alert/Message | Cause | Removal Conditions | Operator Notes |
|---|---|---|---|---|
| Type 2 | "NO ACK XXXXXX" "RETRY" NO RETRY" | An ACK for a message Paladin transmitted to a subscriber was not received (i.e. AMMO, REQ AMMO, CHECKFIRE, FREE TEXT, VEH STS, REQ VEH STS, REQ INIT, SITE DATA, REQ SITE, REQ MOV ORD, MTO TOF, MTO DENY, MVV, REQ MVV, READY, ROUND COMP, SHOT, SPLASH, TARGET FILE, GEOMETRIES, RECORD OF FIRE, QUERY, POSITION RE-PORT and UTE BAT). | Operator selects "RETRY" or "NO RETRY" | If "RETRY" is selected, the AFCS will retransmit the message. If "NO RETRY" is selected, the attempt to transmit will be aborted. |
| Type 2 | "NO BALLISTIC SOLUTION" "ACK" | The operator has entered fire mission data (i.e. target location, target altitude and shell/fuze combination) and the AFCS has failed to determine a ballistic solution. | Operator presses "ACK" | Once "ACK" is pressed, the operator will be allowed to edit all fields on PALADIN FIRE COMMANDS ENTRY display. Verify fire mission data and re-enter as needed. |
| Type 2 | "NO LEGAL AMMO INV COMBINATION" "ACK" | There is no legal shell/fuze combination in inventory, based on the generic shell/fuze combination selected by the operator, for a Paladin Computed Fire Commands fire mission. | Operator presses "ACK" | Edit the PALADIN FIRE COMMANDS ENTRY display. |

## N-4 AFCS OPERATING CONTROLS AND INDICATORS - CONTINUED

**Table N-9. Low Priority Messages with Audio Alerts - Continued**

| Audio Alert | Operator Alert/Message | Cause | Removal Conditions | Operator Notes |
|---|---|---|---|---|
| Type 2 | "OK TO MOVE OR SHOOT" "ACK" | The Initial howitzer location has been established and the NAV subsystem is aligned in survey. | Operator presses "ACK" | No further action required. |
| Type 2 | "PALADIN COMMO OUT XMIT RJTD" ACK" | A CP failure prevents transmission of a message to the FDC. | Operator presses "ACK" | Perform a System Restart and re-try transmitting the message. |
| Type 2 | "PDIU WARNING RECEIVED" "ACK" | A PDIU high priority warning has been received. | Operator presses "ACK" | The AFCS will display "W" in inverse video on top line of the screen, to prompt the operator to check warning messages. |
| Type 2 | "PDIU OUT OR PDIU BUS OUT" "ACK" | PDIU was operational and then a PDIU failure is detected. | Operator presses "ACK" | Perform System Restart to attempt to restore PDIU. |
| Type 2 | "POS UPDATE INTERRUPTED" "ACK" | DRUH detected motion when a NAV Update or Restart was in progress. | Operator presses "ACK" | Ensure vehicle is stationary, verify current location, and perform NAV Update or Restart. |
| Type 2 | "POS UPDATE RJTD FM ACTIVE" "ACK" | A fire mission is activated before a pending NAV Update or Restart has executed. | Operator presses "ACK" | ABORT or complete fire mission and perform NAV Update or Restart. |
| Type 2 | "POS UPDATE RJTD HOWITZER MOVG" "ACK" | DRUH detected vehicle motion during a NAV Update. | Operator presses "ACK" | Ensures vehicle is stationary and perform NAV update or restart. |
| Type 2 | "POS UPDATE RJTD NAV OUT" "ACK" | NAV subsystem fails before a NAV Update can be processed. | Operator presses "ACK" | Cycle AFCS power. |
| Type 2 | "POSITION UPDATE BEYOND ZONE" "ACK" | Position in a NAV Update or Restart is outside the (extended) UTM zone boundaries. | Operator presses "ACK" | Verify current location, re-enter, and perform NAV Update or Restart. |
| Type 2 | "POSITION UPDATE REQUIRED" "ACK" | DRUH requests a NAV Update to restore accuracy. | Operator presses "ACK" | Verify current location and perform a NAV Update. |

## N-4 AFCS OPERATING CONTROLS AND INDICATORS - CONTINUED

**Table N-9. Low Priority Messages with Audio Alerts - Continued**

| Audio Alert | Operator Alert/Message | Cause | Removal Conditions | Operator Notes |
|---|---|---|---|---|
| Type 2 | “PRESS ACK WHEN TUBE STOWED” “ACK” | Paladin has moved since arrival processing was performed. | Operator presses “ACK” | Verify gun tube is stowed before pressing “ACK”. Pressing “ACK” notifies the DRUH that it can use VMS aiding to extend time between ZUPT stops. |
| Type 2 | “PRESS LOAD THEN READY” “ACK” | Displayed when a fire mission is an XM982 or M982 and the Method of Control is DNL. | Operator presses “ACK” | Ensure the XM982 or M982 projectile is on the loading tray, at the correct load elevation, and unrammed. Then press the “READY” softkey. |
| Type 2 | “PROP TEMP UPDATE PENDED” “ACK” | Prop Temp was updated while a Fire Mission was active. | Operator presses “ACK” | The “PROP TEMP UPDATE” message will be pended until EOM is received. |
| Type 2 | “PROP TEMP UPDATE REQUIRED” “ACK” | The Prop Temp Update time has expired since last entered. | Operator presses “ACK” | If in an active Fire Mission, the “PROP TEMP UPDATE REQUIRED” message will be pended until EOM. |
| Type 2 | “RANGE TOO FAR” “ACK” | The Target Location entered during an Operator Initiated Fire Mission can not be reached with Ammo currently in inventory. | Operator presses “ACK” | Once “ACK” is pressed, the operator shall be allowed to edit all fields on PALADIN FIRE COMMANDS ENTRY display. Verify the coordinates and re-enter, otherwise, this mission is not supportable from the current location. |
| Type 2 | “RESTART REQUIRED” “ACK” | An AFCS software fault was detected. | Operator presses “ACK” | Perform a System Restart. |
| Type 2 | “RESTART RJTD BAD POS” “ACK” | This message is displayed if the NAV system components do not agree upon the current howitzer location. | Operator presses “ACK” | Verify current position. |
| Type 2 | “SIMULATED COMMO FAILURE” “ACK” | While in Embedded Training Level 4, a simulated commo failure occurs. | Operator presses “ACK” | Press the “ACK” softkey to continue. Pressing the “Secret” non-illuminated softkeys 2 or 3 on AFCS STATUS display will clear all simulated failures. |
| Type 2 | “SIMULATED COMMO FAILURE” “CLEAR” | While in Embedded Training Level 3, a simulated commo failure occurs. | Operator selects “Clear” | Press the “CLEAR” softkey to continue. This will clear all simulated failures. |

## N-4 AFCS OPERATING CONTROLS AND INDICATORS - CONTINUED

**Table N-9. Low Priority Messages with Audio Alerts - Continued**

| Audio Alert | Operator Alert/Message | Cause | Removal Conditions | Operator Notes |
|---|---|---|---|---|
| Type 2 | "SIMULATED ELECTRICAL FAILURE" "ACK" | While in Embedded Training Level 4, a simulated Electrical failure occurs. | Operator presses "ACK" | Press the "ACK" softkey to continue. Pressing the "Secret" non-illuminated softkeys 2 or 3 on AFCS STATUS display will clear all simulated failures. |
| Type 2 | "SIMULATED ELECTRICAL FAILURE" "CLEAR" | While in Embedded Training Mode Level 3, a simulated electrical failure occurs. | Operator selects "CLEAR" | Press the "CLEAR" softkey to continue. This will clear all simulated failures. |
| Type 2 | "SIMULATED FAILURES CLEARED" "ACK" | Operator cleared simulated failures while in Embedded Training Level 4. | Operator presses "ACK" | Press softkey 2 or 3 to clear simulated failures and display this alert. |
| Type 2 | "SIMULATED HYDRAULIC FAILURE" "ACK" | While in Embedded Training Level 4, a simulated hydraulic failure occurs. | Operator presses "ACK" | Press the "ACK" softkey to continue. Pressing the "Secret" non-illuminated softkeys 2 or 3 on AFCS STATUS display will clear all simulated failures. |
| Type 2 | "SIMULATED HYDRAULIC FAILURE" "CLEAR" | While in Embedded Training Level 3, a simulated hydraulic failure occurs. | Operator selects "CLEAR" | Press the "CLEAR" softkey to continue. This will clear all simulated failures. |
| Type 2 | "SIMULATED NAV FAILURE" "ACK" | While in Embedded Training Level 4, a simulated NAV failure occurs. | Operator presses "ACK" | Press the "ACK" softkey to continue. Pressing the "Secret" non-illuminated softkeys 2 or 3 on AFCS STATUS display will clear all simulated failures. |
| Type 2 | "SIMULATED NAV FAILURE" "CLEAR" | While in Embedded Training Mode Level 3, a simulated NAV failure occurs. | Operator selects "CLEAR" | Press the "CLEAR" softkey to continue. This will clear all simulated failures. |
| Type 2 | "SIMULATED WPN FAILURE" "ACK" | While in Embedded Training Level 4, a simulated weapon failure occurs. | Operator presses "ACK" | Press the "ACK" softkey to continue. Pressing the "Secret" non-illuminated softkeys 2 or 3 on AFCS STATUS display will clear all simulated failures. |
| Type 2 | "SIMULATED WPN FAILURE" "CLEAR" | While in Embedded Training Level 3, a simulated weapon failure occurs. | Operator selects "CLEAR" | Press the "CLEAR" softkey to continue. This will clear all simulated failures. |
| Type 2 | "SITE DEFINITION UPDATE PENDED" "ACK" | Site data was updated while a Fire Mission was active. | Operator presses "ACK" | The "SITE DEFINITION" message will be pended until EOM is received. |
| Type 2 | "TRANSMIT OVERRUN-RESET TCIM" "ACK" | There are more than 55 message transmissions in progress. | Operator presses "ACK" | Reset the TCIM. |

## N-4 AFCS OPERATING CONTROLS AND INDICATORS - CONTINUED

**Table N-9. Low Priority Messages with Audio Alerts - Continued**

| Audio Alert | Operator Alert/Message | Cause | Removal Conditions | Operator Notes |
|---|---|---|---|---|
| Type 2 | “TUBE TEMP SENSOR OUT” “ACK” | A previously operational Tube Temperature Sensor has failed. | Operator presses “ACK” | Monitor rates of fire to determine Safe Time In Tube. |
| Type 2 | “UPDATE RJTD WRONG NAV MODE” “ACK” | NAV Update or Restart attempted when GUN SERVO is active or TBD. | Operator presses “ACK” | Perform a System Restart. |
| Type 2 | “VEHICLE MOTION SENSOR GOOD” “ACK” | The VMS passed a DRUH initiated hardware test and operation has been restored. | Operator presses “ACK” | No further action required. |
| Type 2 | “VEHICLE MOTION SENSOR OUT” “ACK” | DRUH BIT declared the VMS Failed. | Operator presses “ACK” | If in an active Fire Mission, the “VEHICLE MOTION SENSOR OUT” message will be pended until EOM. |
| Type 2 | “WPN OUT” “ACK” | The BCWC has failed. | Operator presses “ACK” | Perform a System Restart. |
| Type 2 | “WPN SUBSYSTEM OUT” “ACK” | The Weapon Control portion of the BCWC (WC) has failed. | Operator presses “ACK” | Perform a System Restart. |
| Type 2 | “ZUPT NO LONGER REQUIRED” “ACK” | The DRUH completed a ZUPT or good GPS aiding data became available. | Operator presses “ACK” | No further action required. |
| Type 2 | “ZUPT REQUIRED” “ACK” | The DRUH requests a ZUPT stop to maintain accuracy. | Operator presses “ACK” | Ensure vehicle is stationary and wait approximately 30 seconds for the “ZUPT NO LONGER REQUIRED” “ACK” message to be displayed. |

## N-4 AFCS OPERATING CONTROLS AND INDICATORS - CONTINUED

**Table N-10. Low Priority Messages without Audio Alerts**

| Audio Alert | Operator Alert/Message | Cause | Removal Conditions | Operator Notes |
|---|---|---|---|---|
| None | “AZIMUTH OF FIRE NOT IN SECTOR” “ACK” | The entered Azimuth of Fire is outside the entered Sector of Fire. | Operator presses “ACK” | Verify the Sectors and Azimuth of Fire and re-enter as needed. |
| None | “CEASE LOAD” | Cease load means that loading of rounds is suspended. If a round is already loaded, it may be shot, then loading will cease. | Operator selects “SHOT”, “CLEAR” or “CHECK”. | If “SHOT” or “CLEAR” is selected, the AFCS will transition to the Verification display. If “CHECK” is selected, normal “CHECKFIRE” processing is followed. |
| None | “CHANGE COMM CONFIG” “YES” “NO” | Communication Configuration was selected, in the Network Settings Display, and there is an active network already established. | Operator selects “YES” or “NO” | If “YES” is selected, the AFCS transitions to the Standard Communication Configuration display. The operator may select another Network setting and modify as needed. If “NO” is selected, no changes to the Communication Configuration will be made. |
| None | “CHANGE TO XXXXXX?” “YES” “NO” Where XXXXXXX represents “BACK UP” OR “PRIMARY”. | The controlling FDC field was selected on the Edit Addresses display. | Operator selects “YES” or “NO” | If “YES” is selected, the controlling FDC will change to either “BACK UP” or “PRIMARY”. If “NO is selected, changes to the controlling FDC will be made and the display will transition to the address line. |
| None | “CLEAR *ASTERISKS* TO CONTINUE” “ACK” | ”USE ALL” was selected while there are fields with asterisks in the Edit Addresses display. | Operator presses “ACK” | Review addresses and enter all required fields to clear all asterisks before selecting “USE ALL.” The Fields required are Paladin URN, FDC (control) URN and Station Rank for both. |
| None | “DEGRADED-ACK TO CONTINUE “ACK” | A Degraded Power Up status was detected. | Operator presses “ACK” | No further action required unless the degraded item is needed for operation. In which case, troubleshoot and cycle AFCS power. |
| None | “DELETE ADDRESS” “YES” “NO” | The “DELETE” softkey was selected in the Edit Addresses display. | Operator selects “YES” or “NO” | If “YES” is selected, the boxed Address or Station Rank will be deleted. If “NO” is selected, no changes will be made to the boxed Address or Station Rank. |
| None | “DISTANCE EXCEEDS 350 KM” “ACK” | A Manual Move Order was entered to a location more than 350KM away. | Operator presses “ACK” | Verify Destination coordinates and re-enter. |

## N-4 AFCS OPERATING CONTROLS AND INDICATORS - CONTINUED

**Table N-10. Low Priority Messages without Audio Alerts - Continued**

| Audio Alert | Operator Alert/Message | Cause | Removal Conditions | Operator Notes |
|---|---|---|---|---|
| None | "DOWNLOAD COMPLETE" "ACK" | Download of an ET level 3 or 4 scenario from a local disk completed successfully. | Operator presses "ACK" | No further action required. |
| None | "DOWNLOAD FAILED" "ACK" | Download of an ET level 3 or 4 scenario from a local disk did not complete successfully. | Operator presses "ACK" | Check connections and re-try. |
| None | "DUPLICATE ADDRESS" "ACK" | One or more IP/Station addresses are customized in Advanced Communication Settings, which resulted in a duplicate condition. | Operator presses "ACK" | This alert/error may not be noticed until another attempt to change Network settings is made. Advanced Communications Settings should *NEVER* be used unless directed by FDC. Return to "BASIC MODE" to reset default settings, then select Advanced Mode only if directed by FDC. |
| None | "DUPLICATE EXTENDED LOT FOUND" "ACK" | A duplicate Propellant Extended Lot was entered. | Operator presses "ACK" | Verify extended Lot and re-enter. |
| None | "DUPLICATE STATION ADDRESS" "ACK" | One or more IP/Station addresses were customized, in Advanced Communication Settings, which resulted in a duplicate condition. | Operator presses "ACK" | This alert/error may not be noticed until another attempt to change Network settings is made. Advanced Communications Settings should *NEVER* be used unless directed by FDC. Return to "BASIC MODE" to reset default settings, then select Advanced Mode only if directed by FDC. |
| None | "DUPLICATE VALUE-REENTER" "ACK" | The same value (URN, station rank or IP address) was entered in the Edit Addresses display. | Operator presses "ACK" | Check and re-enter the last value. |
| None | "EARLY END OF MISSION" | A Fire Mission is ended before Rounds Complete. | Operator selects "SHOT", "CLEAR", or "CHECK". | If "SHOT" or "CLEAR" is selected, the AFCS will transition to the Verification display. If "CHECK" is selected, normal "CHECKFIRE" processing is followed. |
| None | "EMPLACEMENT MISSION UPDATED" "ACK" | The Section In Order display has changed; the data will pertain to the FPF. | Operator presses "ACK" | No further action is required. |

## N-4 AFCS OPERATING CONTROLS AND INDICATORS - CONTINUED

**Table N-10. Low Priority Messages without Audio Alerts - Continued**

| Audio Alert | Operator Alert/Message | Cause | Removal Conditions | Operator Notes |
|---|---|---|---|---|
| None | “ERROR SEGMENT OVERLAP” “ACK” | The entered Mask data segments overlap. | Operator presses “ACK” | Verify Mask data and re-enter. |
| None | “ERROR-LEFT AND RIGHT EQUAL” “ACK” | The entered Sectors Of Fire are equal or Mask segments are equal. | Operator presses “ACK” | The Sectors of Fire and the Mask segments can not be equal. |
| None | “EXCEEDED 84N OR 80S LATITUDE RE-ENTER VALUE” “ACK” | The entered coordinates are outside the UTM area. | Operator presses “ACK” | Verify location and re-enter coordinates. |
| None | “FPF END OF MISSION” | FPF End Of Mission is received from FDC. | Operator selects “SHOT”, “CLEAR”, or “CHECK”. | If “SHOT” or “CLEAR” is selected the PDFCS will transition to the Verification display. If “CHECK” is selected, normal “CHECKFIRE” processing is followed. |
| None | “GRID ZONE ZERO NOT VALID” “ACK” | Grid Zone Zero is not valid Grid Zone. | Operator presses “ACK” | Enter a legal Grid Zone and press ENT again. |
| None | “GUN SWITCH MUST BE OFF” “ACK” | The gun switch is in the “ON” position and a system restart was attempted by selecting SYSTEM RESTART on the main or maintenance menu, or by attempting to leave embedded training. | Operator presses “ACK” | Turn off the gun switch and initiate system restart again. |
| None | “HOWITZER LOCATION NOT DEFINED” “ACK” | Invalid Howitzer location. | Operator presses “ACK”. | Edit location and perform a NAV Update. |
| None | “HOWITZER LOCATION NOT VALID” “ACK” | If operator map is modified and current geodetic location cannot be transformed to the selected operator map. | Operator presses “ACK”. | Edit location and perform a NAV Update. |
| None | “ILLEGAL HOWITZER AREA” “ACK” | ET levels 3 and 4: Operator entered howitzer area illegal. | Operator presses “ACK” | Verify location and re-enter coordinates. |
| None | “ILLEGAL TARGET AREA” “ACK” | ET levels 3 and 4: operator entered target area illegal. | Operator presses “ACK” | Verify Target area and re-enter as needed. |

## N-4 AFCS OPERATING CONTROLS AND INDICATORS - CONTINUED

**Table N-10. Low Priority Messages without Audio Alerts - Continued**

| Audio Alert | Operator Alert/Message | Cause | Removal Conditions | Operator Notes |
|---|---|---|---|---|
| None | "INCOMPLETE ADDRESS XXX(X)" "ACK" Where XXX(X) represents the subscriber (SUB(1), FDC(B) etc.). | "USE ALL" was selected without entering a value in either the URN or Station Rank field on the Edit Addresses Display. | Operator presses "ACK" | Enter a value in the empty field to complete the address. |
| None | "INCOMPLETE ENTRY" "ACK" | The "USE ALL" softkey was selected without entering a value in an all-dashed (-----) field. | Operator presses "ACK" | Enter a value in all dashed fields before pressing the "USE ALL" softkey. |
| None | "INVALID DTG VALUE" "ACK" | Incorrect Date Time Group data entered. | Operator presses "ACK" | This message can be displayed in a number of screens. Usually accompanied with on screen dialog to correct date-time. |
| None | "INVALID GATEWAY" "ACK" | A Gateway was entered, which is not on the same local network, in the Advanced Communication Configuration Mode. | Operator presses "ACK" | Verify the "Gateway" value is defined, and then the Gateway and FDC IP Address will be on the same local network as the Paladin Address. |
| None | "INVALID IP-NOT LOCAL" "ACK" | An incorrect IP address was entered in the Advanced Communication Configuration Mode. | Operator presses "ACK" | Verify IP addresses for all subscribers. The IP addresses must all start with the same number. |
| None | "INVALID LOCATION" "ACK" | Target coordinates are not valid for the Howitzer's current location. | Operator presses "ACK" | Operator is allowed to edit coordinates. |
| None | "INVALID SELECTION" "ACK" | Operator made an invalid selection. | Operator presses "ACK" | Verify selection and re-enter. |
| None | "MESSAGES HAVE BEEN LOST" "ACK" | The message buffer has overflowed. | Operator presses "ACK" | The message buffer holds 8 messages. Check incoming messages when received. |

## N-4 AFCS OPERATING CONTROLS AND INDICATORS - CONTINUED

**Table N-10. Low Priority Messages without Audio Alerts - Continued**

| Audio Alert | Operator Alert/Message | Cause | Removal Conditions | Operator Notes |
|---|---|---|---|---|
| None | "MVV EXTENDED LOT CONFLICT" "ACK" | The PDFCS has stored MVVs, and the operator entered a propellant with the same Extended Lot but different model number into the Ammo Inventory. | Operator presses "ACK" | Verify the conflicting Extended Lot and re-enter as needed. |
| None | "NAV OUT, KEYBOARD ENTRY REQ" "ACK" | The DRUH is not in survey mode and the operator attempts to use tube position to enter azimuth for LEFT, or RIGHT edges, or an EL value on the SITE DATA Display by pressing ENT with no numbers in the selected field. | Operator presses "ACK" | This can happen when the NAV subsystem is OUT or "OK TO MOVE OR SHOOT" has not yet been displayed. Manually enter SITE DATA values. |
| None | "NO AMMO PRESENT" "ACK" | An attempt to initiate a Paladin Computed Fire Command. | Operator presses "ACK" | The inventory must be edited in order to proceed any further. |
| None | "NO BALLISTIC SOLUTION" "ACK" | No ballistic solution could be obtained for a Direct Fire or Paladin Fire Commands mission. | Operator presses "ACK" | Verify entries and edit as needed. |
| None | "NORTHING VALUE NOT VALID RE-ENTER VALUE" "ACK" | An invalid northing was entered. | Operator presses "ACK" | Verify location and re-enter coordinates. |
| None | "NUMBER OF STATIONS SET TO XX" "ACK" Where "XX" represents the number of stations on this Network. | The value entered in the Station Rank field is greater than the number of stations specified in the Network Settings Display. | Operator presses "ACK" | No further actions required. |
| None | "OFFLOAD COMPLETE" "ACK" | Offload of ET level 3 or 4 performance data completed successfully. | Operator presses "ACK" | No further action required. |
| None | "OFFLOAD FAILED" "ACK" | Offload of ET level 3 or 4 performance data failed. | Operator presses "ACK" | Check connections and re-try. |

## N-4 AFCS OPERATING CONTROLS AND INDICATORS - CONTINUED

**Table N-10. Low Priority Messages without Audio Alerts - Continued**

| Audio Alert | Operator Alert/Message | Cause | Removal Conditions | Operator Notes |
|---|---|---|---|---|
| None | "OPERATOR MAP NOT DEFINED" "ACK" | SPHEROID/ DATUM selection is not initialized. | Operator presses "ACK" | Initialize SPHEROID/DATUM. |
| None | "OTHER VOLLEY" | An Active Fire Mission has another volley with different information. (shell/fuze/ propellant combinations) | Clears when first volley is fired. | Prepare for second volley. NOTE: AFCS equipped vehicles do not include the IFS. PERFORM SETTER CHECK, should be set to "NO" to avoid invalid BIT indications. |
| None | "PERFORM SETTER CHECK" "YES" "NO" | "PERFORM SETTER CHECK" was selected. | Operator selects "YES" or "NO" | If "YES" is selected, PERFORM SETTER CHECK will be set to "YES". If "NO" is selected, PERFORM SETTER CHECK will be set to "NO". No further action is required. |
| None | "POSITION COORDINATES INVALID RE-ENTER VALUE" "ACK" | The entered coordinate values do not correlate with the other data entered, or a NAV Update was attempted in ET level 2, 3, or 4. | Operator presses "ACK" | If not in ET level 2, 3, or 4, verify location and re-enter coordinates. NAV Updates are not allowed in ET levels 2, 3, and 4. |
| None | "POSITION IS NOT VALID" "ACK" | A Manual Move Order was entered to an invalid location; e.g. above 84 degrees North. For ET levels 2, 3 and 4 reject any attempted NAV updates. | Operator presses "ACK" | Verify Destination coordinates and re-enter. |
| None | "RANGE TOO FAR" "ACK" | The target location entered in a Paladin Computed Fire Commands fire mission is beyond 50,000 meters from the howitzer's location. | Operator presses "ACK" | Verify target location and edit as needed. |
| None | "RESET TCIM" "YES" "NO" | RESET TCIM was selected from the SETUP AND INFORMATION display. | Operator selects "YES" or "NO" | If "YES" is selected, the TCIM will be reset. If "NO" is selected, the TCIM will not be reset. No further action is required. |

## N-4 AFCS OPERATING CONTROLS AND INDICATORS - CONTINUED

**Table N-10. Low Priority Messages without Audio Alerts - Continued**

| Audio Alert | Operator Alert/Message | Cause | Removal Conditions | Operator Notes |
|---|---|---|---|---|
| None | “SET ACTIVE” “YES” “NO” | A configured Network was selected that is not currently active. | Operator selects “YES” or “NO” | If “YES” is selected, the selected Network will become active and the previously active Network will become inactive. If “NO” is selected, the active Network will not be changed. |
| None | “TRAINING NOT AVAILABLE” “ACK” | A Degraded Power Up status was detected and training is not available. | Operator presses “ACK” | No further action required unless the degraded item is needed for operation or Training Mode is needed. In which case, troubleshoot and cycle AFCS power. |
| None | “UNALLOWED-BEING USED BY FM” “ACK” | The operator tried to delete Ammo (shell, propellant, or fuze) while in the EOM/Continuation state of a Fire Mission. | Operator presses “ACK” | Ammo quantity can be changed, but not deleted, when in a Fire Mission EOM/Continuation state. |
| None | “USE ALL AND COPY” “YES” “NO” | “COPY” was selected in the Network Settings, Select Configuration Option display. | Operator selects “YES” or “NO” | If “YES” is pressed, the current Network will be copied and displayed in the Network display. If “NO” is pressed, the action to Copy is cancelled. |
| None | “VALUE TOO “*XXXX*”” | The entered number is either “TOO BIG” or “TOO SMALL.” | Operator presses “ACK” | Enter a number value with in the range shown in the prompt. |
| None | “WARNING-RANGE SET TO MAXIMUM” “ACK” | The range to the Mask is set to a calculated minimal Maximum range. | Operator presses “ACK” | Verify Mask and contact FDC if an Unsafe condition exists. |

## N-5 DC POWER MESSAGES.

Three Auxiliary Power messages can appear on any menu being displayed on the DU panel. Operator actions for any message will be the same regardless of the menu on which it is displayed.

### N-5.1 On Auxiliary Power.

If vehicle battery voltage drops to a point below that needed by the Power Conditioner Unit (PCU) to operate the AFCS, the PCU will automatically switch to auxiliary power (backup batteries) to maintain AFCS operation. When the switch to auxiliary power occurs, an audible alert will be sounded over the intercom, and a visual alert will be displayed at the bottom of the menu.

**CAUTION**

Prolonged operation on auxiliary power may cause the AFCS to shut down automatically.

At this time, the vehicle engine must be started to recharge the vehicle batteries.

The operator must press the softkey under ACK to silence the audible alarm and eliminate the message.

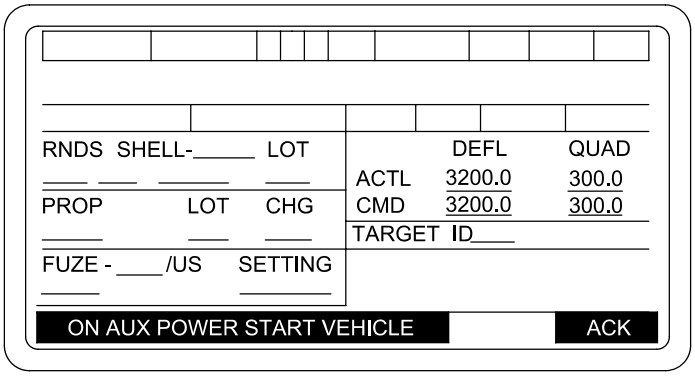


06pc157td

## N-5 DC POWER MESSAGES - CONTINUED

### N-5.2 Auxiliary Power Not Available.

If the auxiliary power batteries are not functional (e.g., low, damaged, or disconnected), a visual alert will be displayed at the bottom of the menu.

The operator must press the softkey under ACK to eliminate the message. At this time, the vehicle engine must be started and kept running to ensure AFCS operation until auxiliary power is restored.

**NOTE**

This message can also appear during BIT.

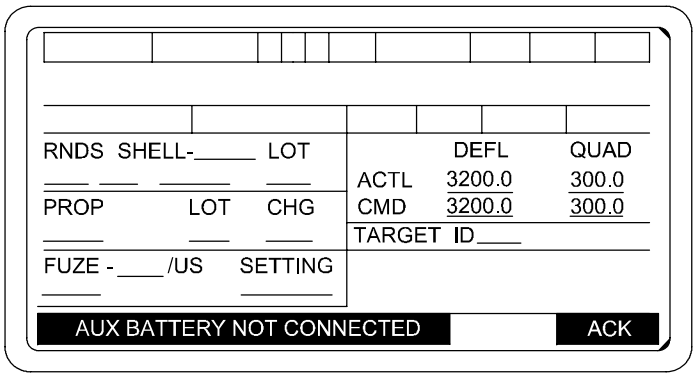


06pc158ta

### N-5.3 Vehicle and Auxiliary Power OK.

When the vehicle battery voltage rises sufficiently, the PCU will automatically switch to vehicle power. When the switch occurs, a visual alert is displayed at the bottom of the menu as shown below.

The operator must press softkey under ACK to eliminate the message.

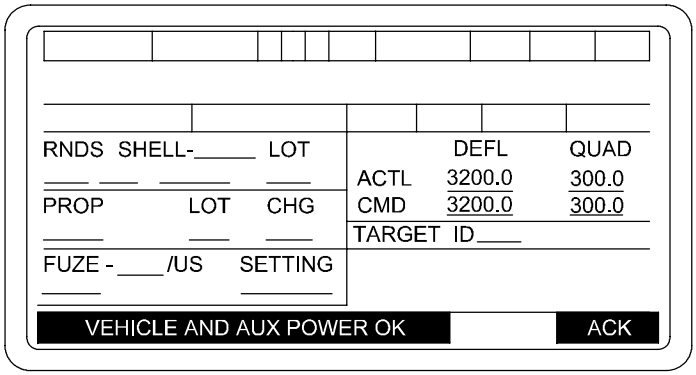


06pc159ta

# N-6 AFCS INITIALIZATION.

## N-6.1 System Power-Up.

**WARNING**

**ALKALINE BATTERIES**

Caustic potassium hydroxide gas may be released from leaking or ruptured batteries. Avoid eye or skin contact and inhalation of vapors. Increase ventilation. Wear safety glasses and rubber gloves when handling leaking batteries. Dispose in accordance with local regulation. Refer to TB 43-0134, Batteries, Disposition and Disposal for additional information.

**NOTE**

- M93 MVS must be installed and connected prior to turning the vehicle MASTER power switch ON.
- PLGR/DAGR should be installed and powered prior to turning on the DU of the AFCS in order for the AFCS to use the PLGR/DAGR data.
- The following steps must be completed prior to POWERING UP and INITIALIZATION of the AFCS.

a. Outside the howitzer:
   1. Left front drive sprocket must be within 1 meter of SCP.
   2. Gun tube in travel lock.
   3. M93 Chronograph connections verified.
   4. FM VOICE/DIGITAL Radio antennas are properly mounted, cables and ground connections verified.
   5. PLGR/DAGR antenna cable connections verified.

# N-6 AFCS INITIALIZATION - CONTINUED

## N-6.1 System Power-Up - Continued

b. Inside the howitzer:
   1. Turret lock in LOCKED position.
   2. 1553 BUS terminator connection verified.
   3. PLGR/DAGR ground connection verified.
   4. PLGR/DAGR installed.
   5. Set MASTER switch to ON.
   6. Ensure 10 PCU switches are ON.
   7. Turn PLGR/DAGR ON and FILL verified.
   8. Turn radios ON, and perform VOICE radio check.
   9. Idle engine at 1000 to 1200 RPMs.
   10. Make sure TRAINING switch on DU is OFF.

With the PLGR/DAGR in the PLGR/DAGR mount and all external cables attached, press the ON/BRT key on the PLGR key pad or press the PWR/QUIT key on the DAGR keypad. The PLGR/DAGR should power up automatically and perform its self-test (BIT). Operate the PLGR in accordance with the PLGR TM 11-5825-291-13 or operate the DAGR in accordance with the DAGR TM 11-5820-1172-13.

If the PLGR/DAGR does not have a current key (i.e. the PLGR/DAGR was previously zeroized, newly installed or the key has expired), then load a valid key in accordance with the PLGR TM 11-5825-291-13, or in accordance with DAGR TM 11-5820-1172-13.

**NOTE**

To load a key, the DRUH must be off, or the P4 DRUH-PLGR/DAGR signal connector must be disconnected to cause a PLGR/DAGR COM FAIL. Simple re-attachment of P4 DRUH-PLGR/DAGR Signal Connector after PLGR/DAGR keying will automatically cause DRUH-PLGR/DAGR communications to resume if DRUH is on.

If the PLGR/DAGR antenna has a clear view of the sky, turn PLGR/DAGR on.

If the antenna's view of the sky is blocked (e.g. the vehicle is in a building, under tree cover or parked next to a large structure), move vehicle until the PLGR/DAGR antenna is clear.

If the vehicle cannot be moved, keep PLGR/DAGR turned off until the vehicle can be moved to a location with a clear view of the sky.

**NOTE**

If the PLGR/DAGR is off, the Navigation System will still accept initialization data from the AFCS for inertial operation and the Navigation System will operate as before.

c. If the antenna has a clear view of the sky and PLGR/DAGR has a valid position, current GPS time, current GUV key, and has stored a current satellite almanac, PLGR/DAGR will be acceptable for use in about 3 minutes following the first turn-on of the day. It will take about 90 seconds for subsequent turn-ons. These are the normal operating conditions.

# N-6 AFCS INITIALIZATION - CONTINUED

## N-6.1 System Power-Up - Continued

d. If the antenna has a clear view of the sky and PLGR/DAGR has a current GUV key but PLGR/DAGR doesn't have a valid position, current GPS time, or current satellite almanac, it may take up to 20 minutes after turn-on for the PLGR/DAGR to output data of acceptable accuracy.

e. If the PLGR/DAGR has a valid position, current GPS time, current key, and current satellite almanac, but the antenna is masked from a clear view of the sky when PLGR/DAGR is turned on, it may take up to 20 minutes to get acceptable data after the vehicle is moved to a location with a clear view of the sky. This results from the PLGR initiating a search for all possible satellites if it can't lock on to those expected, for its current position, time, and almanac, within a reasonable time interval.

f. If the PLGR/DAGR doesn't have a current key, its data won't be acceptable for use by the AFCS. However, assuming a clear view of the sky, it can be turned on to initialize position, time, and satellite almanac in about 20 minutes. Then when a valid key is located, the PLGR/DAGR will be ready to go within three minutes.

**NOTE**

M93 MVS must be installed and connected prior to turning the vehicle MASTER power switch ON.

Make sure TRAINING switch on DU is OFF. Set POWER switch on DU to ON. When power is first applied to the AFCS, the display will be blank and the AFCS will automatically perform its internal self-test (BIT). Next a screen will be displayed with this message "AFCS OPERATING SYSTEM BOOT UP . . . PLEASE WAIT" . . ., followed by an "INITIALIZATION IN PROGRESS. . . " screen.

**NOTE**

- The time lapse between first three screens can range from 3 to 5 minutes.
- If screen stays blank for more than 7 minutes, power down system.

A SYSTEM VERIFICATION FAILURE screen may be displayed only if there is an incompatibility between hardware and software. In this case the AFCS shall automatically be powered down.

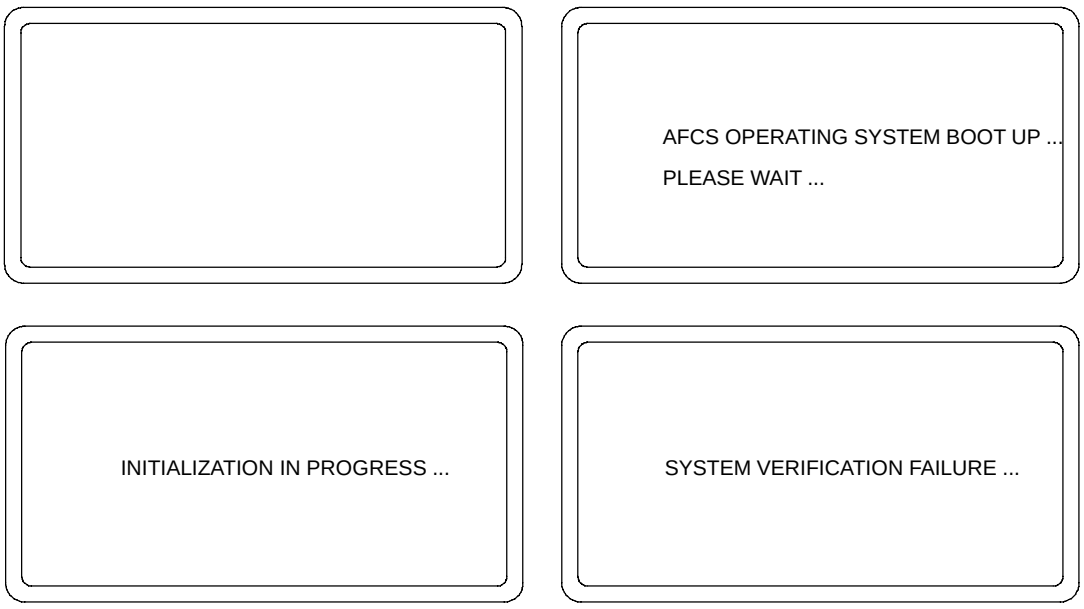


06pc414ma

# N-6 AFCS INITIALIZATION - CONTINUED

## N-6.1 System Power-Up - Continued

After the AFCS powers up, the PLGR/DAGR screen should read:

REMOTE CONTROL
Only ZEROIZE key
activated

At this point the PLGR/DAGR key pad will become inactive. The only PLGR/DAGR operation allowed using the key is EMERGENCY ZEROIZE.

If this message is not displayed on the PLGR/DAGR screen, and the Low Priority Message "GPS OUT - GPS DISCONNECTED" is not displayed on the DU, ensure that the DRUH-PLGR/DAGR Signal Connector (P4) plug on the W17A cable is connected and secure. Once this PLGR/DAGR screen is displayed, proceed with system initialization.

### NOTE

- NAV SUBSYSTEM includes: VMS, DRUH, and VMS modems
- PCU SUBSYSTEM includes: PCU and both back-up batteries.
- The switches on the PCU are circuit breakers. They should be left ON at all times, so they will not wear out from being turned off and on constantly.
- In AFCS equipped vehicles, the Inductive Fuze Setter (IFS) is not utilized. Upon system power-up, the software will detect no IFS and display the power up BIT status as - -.

This screen displays the subsystems that are checked by BIT. As the subsystems are checked, the dashed lines will change to a subsystem status (OK, DEGRADED, - - ). The - - appears on the MVS status line when the AFCS could not be connected to the MVS. This screen also identifies the system software version.

# N-6 AFCS INITIALIZATION - CONTINUED

## N-6.1 System Power-Up - Continued

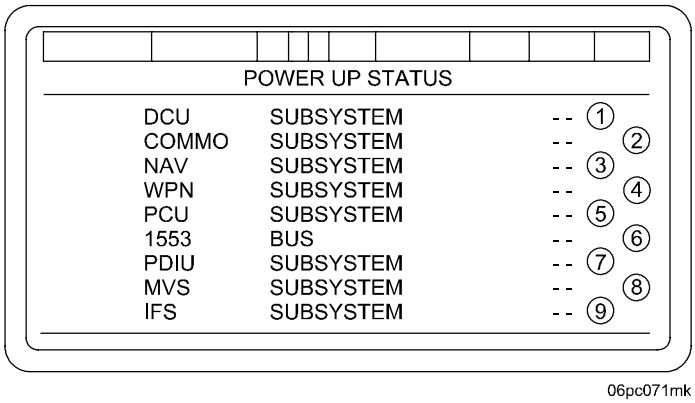


**Table N-11. Power Up Status Display**

| Field | Description | Conditions for display |
|---|---|---|
| 1 | DCU<br>Range/Values:<br>(1) - -<br>(2) DEGRADED<br>(3) OK | <br><br>(1) Status not yet determined.<br>(2) NAV interface BIT, ET interface BIT or 1553B bus controller BIT fails.<br>(3) Subsystem is fully operational. |
| 2 | COMMO<br>Range/Values:<br>(1) - -<br>(2) OUT<br>(3) DEGRADED<br>(4) OK | <br><br>(1) Status not yet determined.<br>(2) COMMO not operational.<br>(3) TCIM BIT or CP CPCI NVM BIT fails and COMMO operational.<br>(4) Subsystem is fully operational. |
| 3 | NAV<br>Range/Values:<br>(1) - -<br>(2) OUT<br>(3) DEGRADED<br>(4) OK | <br><br>(1) Status not yet determined.<br>(2) NAV interface BIT or DRU BIT fails.<br>(3) VMS BIT fails.<br>(4) Subsystem is fully operational. |

# N-6 AFCS INITIALIZATION - CONTINUED

## N-6.1 System Power-Up - Continued

**Table N-11. Power Up Status Display - Continued**

| Field | Description | Conditions for display |
|---|---|---|
| 4 | WPN<br>Range/Values:<br>(1) - -<br>(2) OUT<br>(3) DEGRADED<br>(4) OK | <br><br>(1) Status not yet determined.<br>(2) Servo fails or WPN subsystem not operational.<br>(3) BCWC CPCI operational and cannon setup not acknowledged or tube temperature sensor or BCWC CPCI NVM fails.<br>(4) Subsystem is fully operational. |
| 5 | PCU<br>Range/Values:<br>(1) - -<br>(2) DEGRADED<br>(3) OK | <br><br>(1) Status not yet determined.<br>(2) PCU BIT fails.<br>(3) Subsystem is fully operational. |
| 6 | 1553<br>Range/Values:<br>(1) OUT<br>(2) DEGRADED<br>(3) OK | <br><br>(1) 1553B bus controller BIT fails or no LRUs are connected on this bus.<br>(2) One or more operational LRUs (not MVS) are not communicating on this bus.<br>(3) Subsystem is fully operational. |
| 7 | PDIU<br>Range/Values:<br>(1) - -<br>(2) OUT<br>(3) OK | <br><br>(1) Status not yet determined.<br>(2) PDIU not operational.<br>(3) Subsystem is fully operational. |
| 8 | MVS<br>Range/Values:<br>(1) - -<br>(2) OUT<br>(3) OK | <br><br>(1) Status not yet determined.<br>(2) MVS not operational.<br>(3) Subsystem is fully operational. |
| 9 | IFS<br>Range/Values:<br>(1) - - | <br><br>(1) The IFS system is not operational. |

# N-6 AFCS INITIALIZATION - CONTINUED

## N-6.2 Initializing.

In the event of a failure during POWER UP STATUS, the message “DEGRADED - ACK TO CONTINUE” will be displayed on the bottom line of the EL Panel. To continue, depress softkey under ACK. After the self-test is complete, SELECT OPERATIONAL MODE menu is displayed.

**NOTE**

If all systems are OK, the screen below will not be shown.

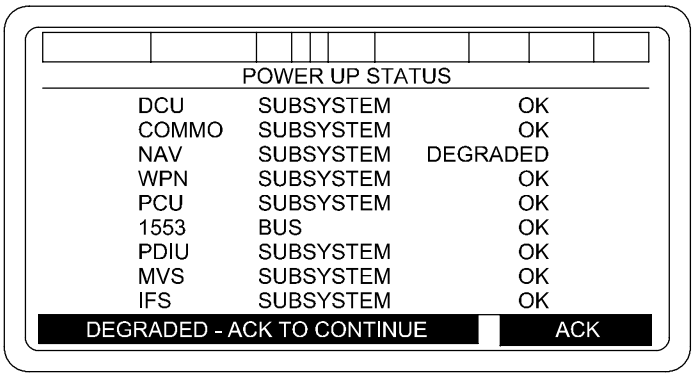


06pc072mf

**NOTE**

If DCU contains an incorrect configuration, the AFCS will not allow the operator to select normal operations until a correct DCU software configuration is downloaded.

When configuration verification checking indicates that the executed software configuration is not the same as the acquired software configuration, a short error message “INVALID SOFTWARE CONFIGURATION”, “ACK” will appear on the softkey label line of the DU.

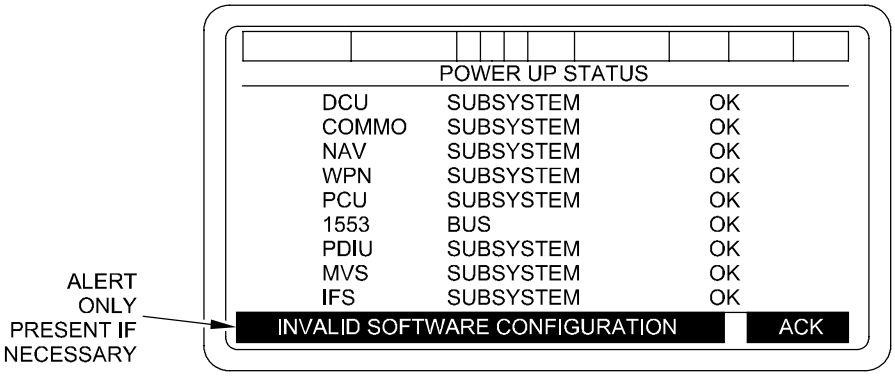


06pc245tb

# N-6 AFCS INITIALIZATION - CONTINUED

## N-6.2 Initializing - Continued

When a Fire Control Alignment is required by the AFCS, the alert “FIRE CONTROL ALIGN” “REQ” “ACK” will appear on the softkey label line of the DU. This alignment must be accomplished before INITIALIZATION of the AFCS can be completed. If a full Fire Control Alignment including SYSTEM RESTART or Power Cycle is not completed when it is requested, the DU FAULT lamps and ACU BIT lamp will illuminate and remain lit.

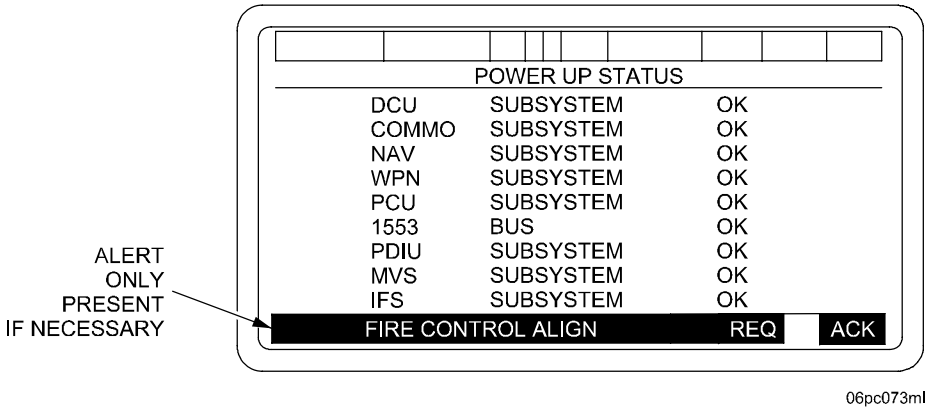


When the message is acknowledged, the AFCS will proceed to the SELECT OPERATIONAL MODE menu. To view detailed software configuration information for each LRU, MAINTENANCE should be selected IAW procedure in para N-9.1.

After an orderly shutdown, go to para N-6.3. However, if a catastrophic failure happens within the system, follow the procedures below.

When initializing the AFCS, communications parameters (NETWORK setup display) are entered to establish digital communications. Data to align the navigation system to a known location must also be entered at initialization. Other data to establish date/time, ammunition supply and propellant temperature, TOT response time, load elevation, and sector of fire must be entered before the initialization process is complete. All this data is input during NORMAL OPERATIONS Mode which is selected from the SELECT OPERATIONAL MODE menu.

### NOTE

- It is possible that an ALERT(S) may appear on the bottom line of the SELECT OPERATIONAL MODE screen. To continue, press the ACK softkey.
- NORMAL OPERATIONS and MAINTENANCE shall not be available when the training enable switch is up.

# N-6 AFCS INITIALIZATION - CONTINUED

## N-6.2 Initializing - Continued

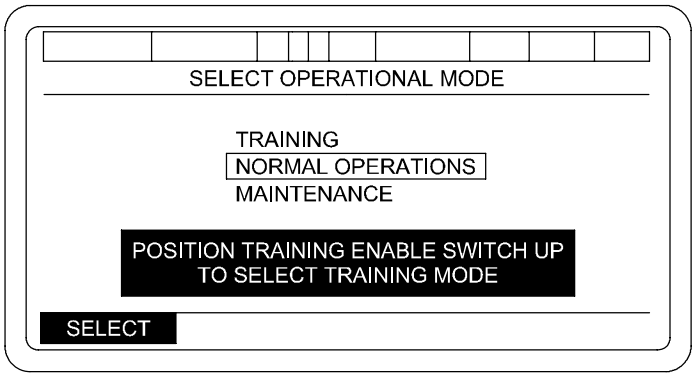


06pc094ma

a. Mode Selection. Set TRAINING ON/OFF switch to OFF when selection other than TRAINING is required. Box in NORMAL OPERATIONS mode, Press SELECT key, NETWORK menu will be displayed. The operator has the option of storing up to six NETWORK configurations.

b. NETWORK display. Upon initialization of a previously configured AFCS, the display lists all previously configured network configurations.

Initialization of a virgin PALADIN, all communications configurations, “CFG”, shall be set to “---” and all other columns will be blank.

Only one network configuration will be active at any one time. The active configuration is identified by the label “*ACTIVE*” in the STATUS column. Inactive configurations will not have anything displayed in the STATUS column. When initializing a virgin Paladin and once the first network is defined, the system shall automatically set to *ACTIVE*.

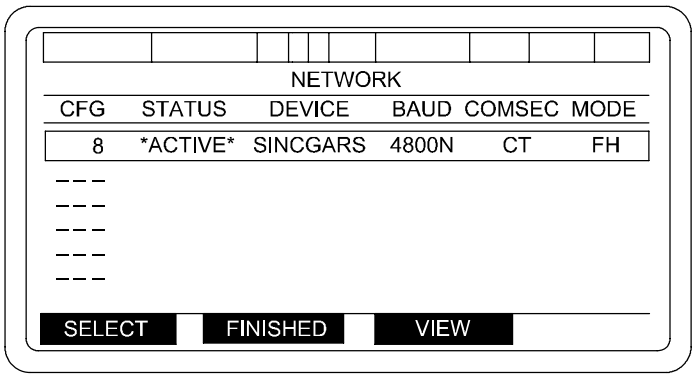


06pc321t

TACFIRE configurations will not display anything in the COMSEC and MODE columns of the NETWORK screen.

188-220 communications configurations identify the Device, Baud Rate, COMSEC and MODE. 188-220 configurations with any customized values identify the Device as “CUSTOM/R” for Radio and “CUSTOM/W” for Two-Wire.

The AFCS will not reorder network configurations as a result of deletions.

The FINISHED and VIEW softkeys are not visible unless at least one configuration is defined.

# N-6 AFCS INITIALIZATION - CONTINUED

## N-6.2 Initializing - Continued

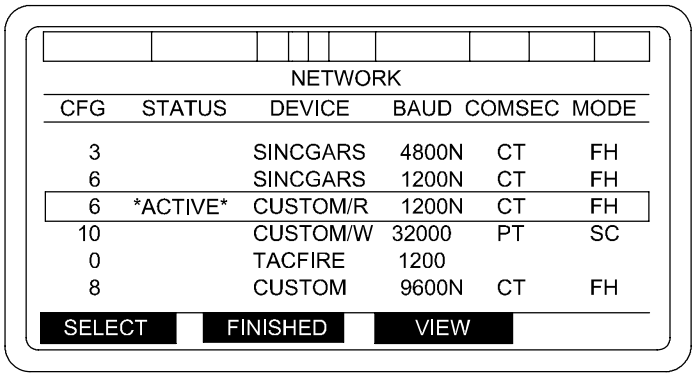


06pc322t

Softkey sequencing shall be as follows:

- SELECT - If the highlighted configuration was previously defined, control transitions to NETWORK SETTINGS-SELECT CONFIGURATION OPTION display. If the highlighted configuration has not been defined, control transitions to NETWORK SETTINGS-STANDARD COMMUNICATION CONFIGURATION display.
- FINISHED - When the operator presses the FINISHED softkey, the AFCS stores all defined network configurations and control transitions to NORMAL OPERATIONAL INITIALIZATION display.
- VIEW - When the VIEW softkey is pressed and the currently selected network configuration has been defined, control transitions to the NETWORK SETTINGS display. If the currently selected network configuration has not been defined, the VIEW softkey is inactive.
- CANCEL - When the CANCEL softkey is pressed, any defined configuration values are discarded.

# N-6 AFCS INITIALIZATION - CONTINUED

## N-6.2 Initializing - Continued

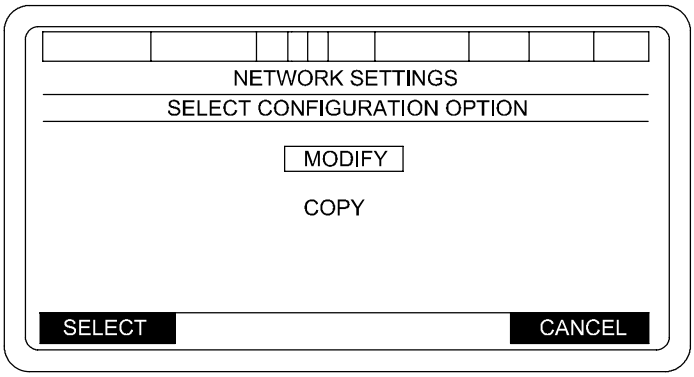


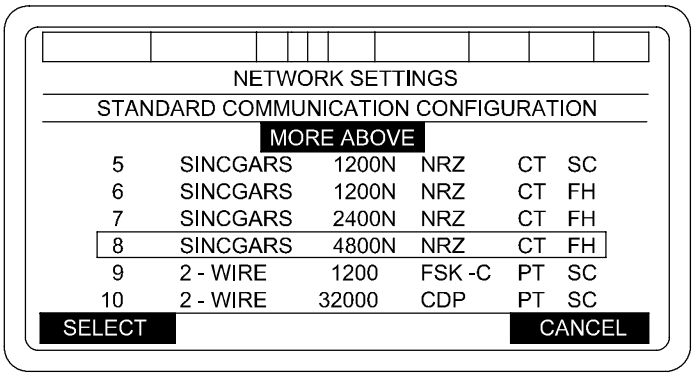


06pc320t

c. Standard Communications Configurations.

**NOTE**

- If the Communication Configuration is not defined in NETWORK display, then configuration #8 will be the default boxed selection.
- If the Communication Configuration is defined in NETWORK display, then that configuration number is the default boxed selection.

# N-6 AFCS INITIALIZATION - CONTINUED

## N-6.2 Initializing - Continued

(1) AFCS supports the following 11 predefined communications configurations:

**Table N-12. Network Configurations**

| CONFIGURATION MODE | DEVICE | BAUD RATE | COMSEC | MODE | MODULATION |
|---|---|---|---|---|---|
| 0 | TACFIRE | 4800 | ------ | ------ | NRZ |
| 1 | Sincgars | 4800 | PT | SC | NRZ |
| 2 | Sincgars | 4800 | CT | SC | NRZ |
| 3 | Sincgars | 4800 | CT | FH | NRZ |
| 4 | Sincgars SIP or ASIP | 1200N | PT | SC | NRZ |
| 5 | Sincgars SIP or ASIP | 1200N | CT | SC | NRZ |
| 6 | Sincgars SIP or ASIP | 1200N | CT | FH | NRZ |
| 7 | Sincgars SIP or ASIP | 2400N | CT | FH | NRZ |
| 8 | Sincgars SIP or ASIP | 4800N | CT | FH | NRZ |
| 9 | 2-Wire | 1200 | PT | SC | FSK-C |
| 10 | 2-Wire | 32000 | PT | SC | CDP |

(2) Softkey sequencing shall be as follows:

- SELECT - Selects the currently boxed selection. If the currently boxed selection is Communication Configuration 0, control transitions to TACFIRE NETWORK SETTINGS. If the currently boxed selection is Communication Configuration 1 to 10, control transitions to 188-220 NETWORK SETTINGS.
- CANCEL - If the operator presses CANCEL, the current display transitions to the previous display.

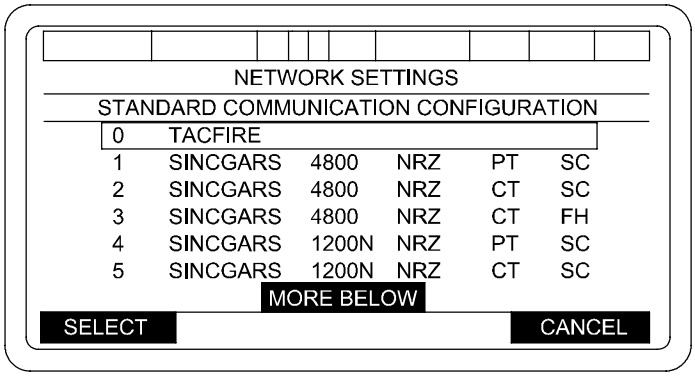


06pc319t

# N-6 AFCS INITIALIZATION - CONTINUED

## N-6.2 Initializing - Continued

d. Network Settings-Select Configuration Option.

(1) Softkey sequencing shall be as follows:

- SELECT - Selects the currently boxed selection. Transition of control depends upon the selected menu.
- CANCEL - When pressed, control transitions to NETWORK display.

(2) MODIFY selection - Allows the operator to modify the current network configuration. If the current protocol is 188-220, then control transitions to 188-220 NETWORK SETTINGS. If the current protocol is TACFIRE, then control transitions to TACFIRE NETWORK SETTINGS.

(3) SET ACTIVE selection

**NOTE**

SET ACTIVE selection will not be displayed if the current configuration is active.

This selection allows the operator to set the current network configuration as the ACTIVE configuration. The following operator prompts are displayed: “SET ACTIVE” “YES” “NO”
If NO is selected, no changes will be made.
If YES is selected, then the display will transition as follows:
If the current protocol is TACFIRE, then control shall transition to TACFIRE NETWORK SETTINGS.
If the current protocol is 188-220, then control shall transition to display 188-220 NETWORK SETTINGS.

(4) COPY selection

**NOTE**

COPY selection will not be displayed if all six network configurations have been defined.

Allows the operator to copy the current configuration into the first empty network configuration. The following operator prompt shall be displayed:
“USE ALL AND COPY?” “YES” “NO”
If NO is selected, no changes will be made.
If YES is selected, the current configuration copies into the first undefined network configuration. Control then transitions to the NETWORK display.

# N-6 AFCS INITIALIZATION - CONTINUED

## N-6.2 Initializing - Continued

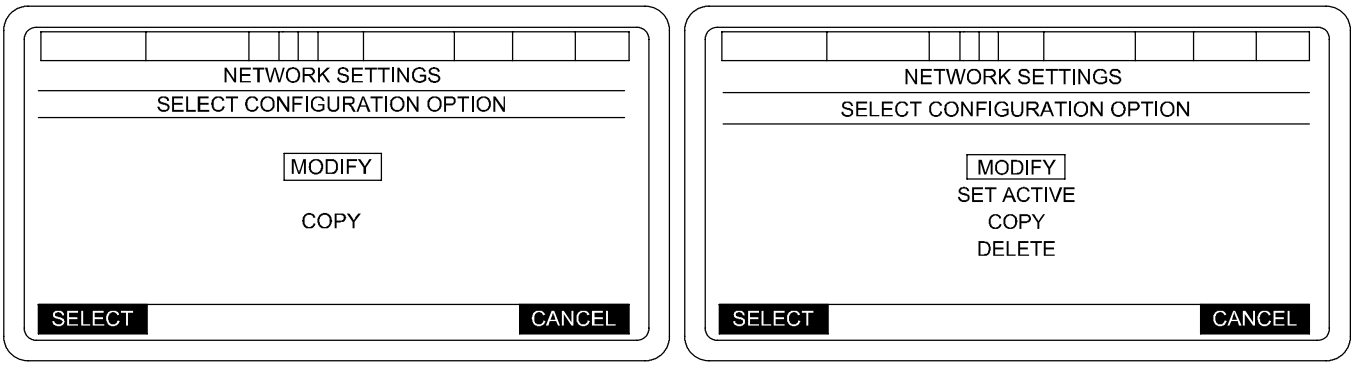


06pc318t

(5) DELETE selection

**NOTE**

DELETE selection will not be displayed if the current configuration is the active configuration.

Allows the operator to delete the current network configuration. The following message shall be displayed:
"DELETE NETWORK?" "YES" "NO"
If NO is selected, no changes will be made.
If YES is selected, the current configuration is deleted and control transitions to the NETWORK display.

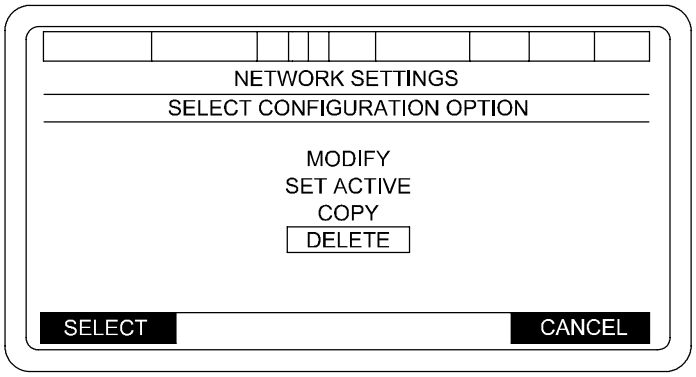


06pc317ta

# N-6 AFCS INITIALIZATION - CONTINUED

## N-6.2 Initializing - Continued

e. Network Settings-188-220C Protocol.

### NOTE

- Each selection that requires configuration is marked with an asterisk (*). The default boxed shall be the first asterisked selection. If there are no asterisked selections, the default boxed selection is Net Type when the display is entered.
- The following values are required: "Net Type" and "Edit Addresses". If the "Net Type" is not defined, the "Edit Addresses" selection shall not be visible to the operator. The address definition depends on the "Net Type" value.
- If the "Configuration Mode" is set to BASIC, the "Advanced Settings" selection will not be visible. If the "Configuration Mode" is set to ADVANCED and any "Advanced Settings" have been customized, the "Communication Configuration" value will be displayed as "CUSTOM-XX" where "XX" is the original Communication Configuration number.

SELECT softkey when the following selection is boxed:

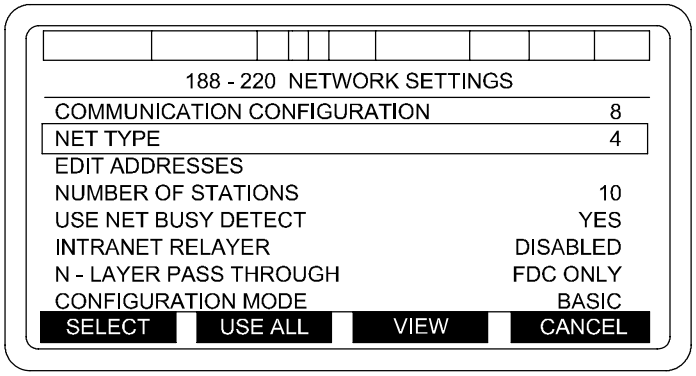


06pc316t

(1) Communication Configuration selection - Allows the operator to change the current Communication Configuration. The following message shall be displayed:
"CHANGE COMM CONFIG?" "YES" "NO".
If NO is selected, no changes will be made.
If YES is selected, the NETWORK SETTINGS-STANDARD COMMUNICATION CONFIGURATION screen will be displayed.

# N-6 AFCS INITIALIZATION - CONTINUED

## N-6.2 Initializing - Continued

(2) Net Type selection - Prompts the operator to enter a value for the NET TYPE. The valid range is 0 to 255.
If the “Net Type” is modified and the “Configuration Mode” is set to ADVANCED, then default subscriber addresses shall be updated.
If any address becomes a duplicate of another address as a result of changing the “Net Type”, the following message will be displayed:
“DUPLICATE IP ADDRESS” “ACK”
If a duplicate address is detected, the “Edit Addresses” selection is marked with an asterisk (*).

(3) Edit Addresses selection - Allows the operator to modify the network addresses. If the Configuration Mode is set to BASIC, then control transitions to 188-220 Network Addresses (Basic). If the “Configuration Mode” is set to ADVANCED, then control transitions to 188-220 Network Addresses (Advanced).

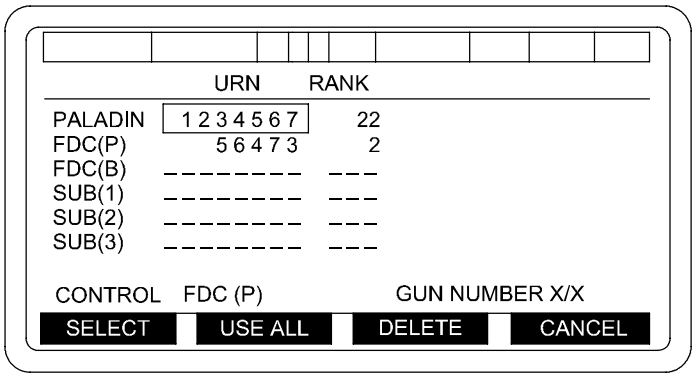


06pc315ta

(4) Number of Stations selection - Prompts the operator to enter a value for NUMBER OF STATIONS. The valid range is 2 to 31 for previously undefined configurations. If the configuration has been previously defined, the valid range shall be XX to 31 where XX is equal to the highest current Rank that was selected.

(5) Use Net Busy Detect selection - If the installed TCIM is not capable of performing Net Busy Detection function, the following message shall be displayed:
“NOT SUPPORTED BY THIS TCIM” “ACK”.
If the installed TCIM supports Net Busy Detect and allows the operator to select either “YES” or “NO” by pressing the SELECT softkey.
If Use Net Busy Detect is modified when the Configuration Mode is set to ADVANCED, then the value of Busy Detect Override will be set to default value for current settings of Device, COMSEC, Mode, Modulation, Baud Rate and EDC.

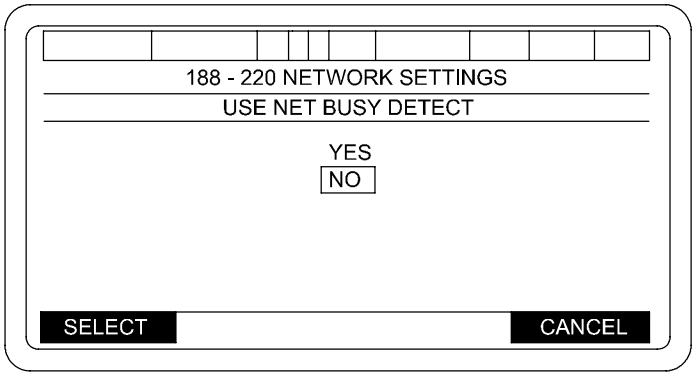


06pc314ta

# N-6 AFCS INITIALIZATION - CONTINUED

## N-6.2 Initializing - Continued

(6) Intranet Relayer selection - Control transitions to a screen titled 188-220 NETWORK SETTINGS - INTRANET RELAYER and allows the operator to select either “Enabled” or “DIsabled” by pressing the SELECT softkey.

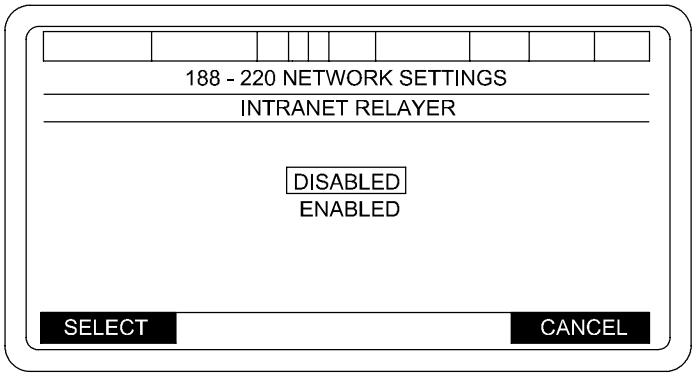


06pc313ta

(7) N-Layer Pass Through selection - Control transitions to 188-220 NETWORK SETTINGS - N-LAYER PASS THROUGH and allows the operator to select “FDC Only”, “Enabled”, or “Disabled” by pressing the SELECT softkey.

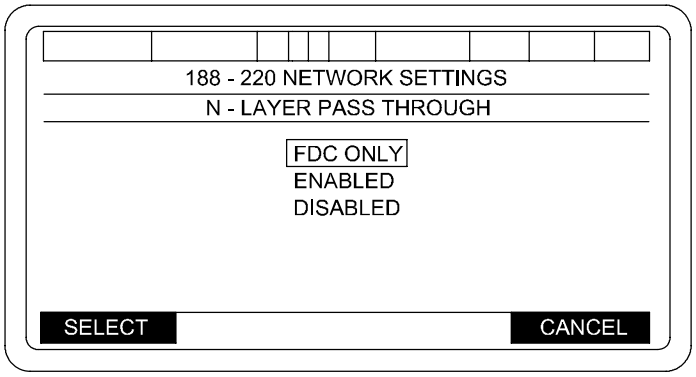


06pc312ta

(8) Configuration Mode selection

If the current Configuration Mode is set to BASIC, the following **WARNING** screen is displayed:

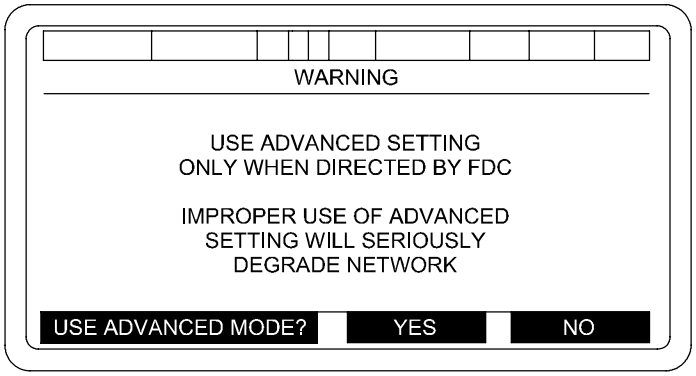


06pc311t

If the operator presses YES, Configuration Mode changes to ADVANCED.

If the operator presses NO, Configuration Mode remains set to BASIC.

# N-6 AFCS INITIALIZATION - CONTINUED

## N-6.2 Initializing - Continued

If the current Configuration Mode is set to ADVANCED, the following **WARNING** screen is displayed:

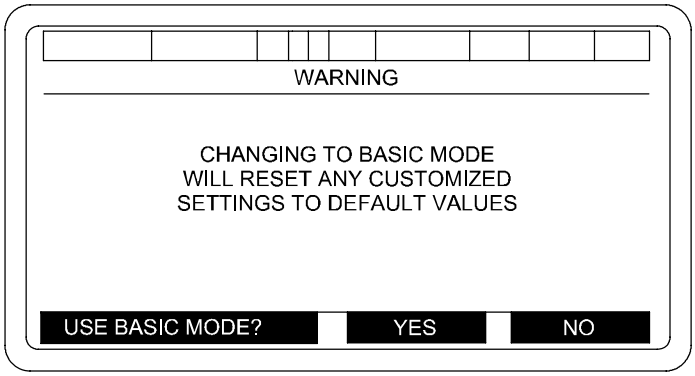


06pc310t

If the operator presses YES, Configuration Mode changes to BASIC.
If the operator presses NO, Configuration Mode remains set to ADVANCED.

(9) ADVANCED SETTINGS selection

**WARNING**

- Modification and use of ADVANCED SETTINGS should only be performed at the direction of FDC. Improper use of ADVANCED SETTINGS will seriously degrade network.
- ADVANCED SETTING changes are not authorized by the user unless directed by FDC. Failure to comply could result in system degradation.

When ADVANCED SETTING is selected, control transitions to ADVANCED 188-220 PROTOCOL SETTINGS.

f. Network Settings-TACFIRE Protocol.

**NOTE**

- Each selection that requires configuration shall be marked with an asterisk (*). The default boxed will be the first asterisked selection. If there are no asterisked selections, the default boxed selection shall be Edit Addresses when the display is entered.
- The following values are required: “Edit Addresses”, “Net Access Delay (Seconds)”, and “Gun Key Time (Seconds)”.

# N-6 AFCS INITIALIZATION - CONTINUED

## N-6.2 Initializing - Continued

If the “Device” value is modified and the current “Modulation” becomes invalid, the “Modulation” is set to the default values of SINCGARS/NRZ and 2 Wire/CDP.

If the “Modulation“ value is changed because “Device” was modified, then the “Baud Rate” shall be set to the default value of SINCGARS/NRZ/4800 baud and 2 Wire/CDP/32000 baud.

If the “Modulation” value is modified, and the “Baud Rate” value becomes invalid, then the “Baud Rate” shall be set to default value based on “Device” and “Modulation” setting as follows:

| Device | Modulation | Default Baud Rate |
|---|---|---|
| SINCGARS | NRZ | 4800 baud |
| SINCGARS | Fsk-188B | 1200 baud |
| SINCGARS | Fsk-188C | 1200 baud |
| 2 Wire | CDP | 32000 baud |
| 2 Wire | Fsk-188B | 1200 baud |
| 2 Wire | Fsk-188C | 1200 baud |

Pressing CANCEL softkey transitions to TACFIRE NETWORK SETTINGS display without changing the selection value. Invalid combinations will not be selectable.

SELECT softkey when the following selection is boxed:

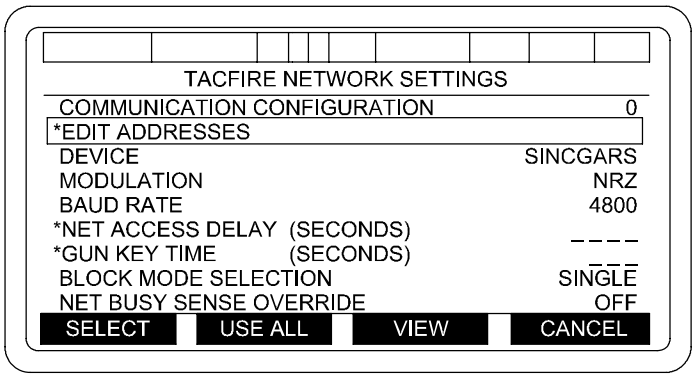


06pc307ta

(1) Communication Configuration selection - Allows the operator to change the current Communications Configuration. The following message will be displayed:
“CHANGE COMM CONFIG?” “YES” “NO”.
If NO is selected, no changes will be made.
If YES is selected, the NETWORK SETTINGS-STANDARD COMMUNICATION CONFIGURATION screen will be displayed.

# N-6 AFCS INITIALIZATION - CONTINUED

## N-6.2 Initializing - Continued

(2) Edit Addresses selection - Transitions to display TACFIRE NETWORK ADDRESSES.

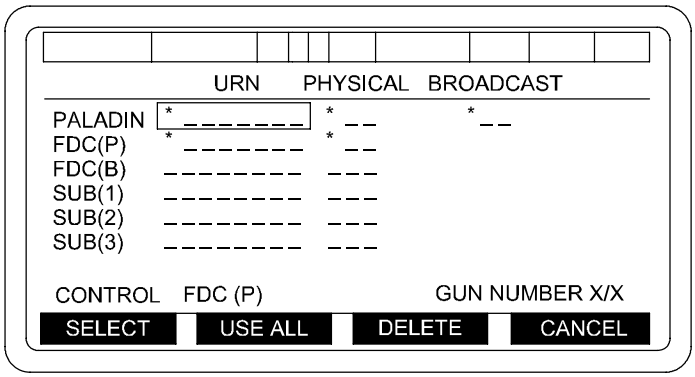


06pc308ta

(3) DEVICE MODULATION, and BAUD RATE selections—Transitions to TACFIRE NETWORK SETTINGS and subtitled with the selection values shown below:

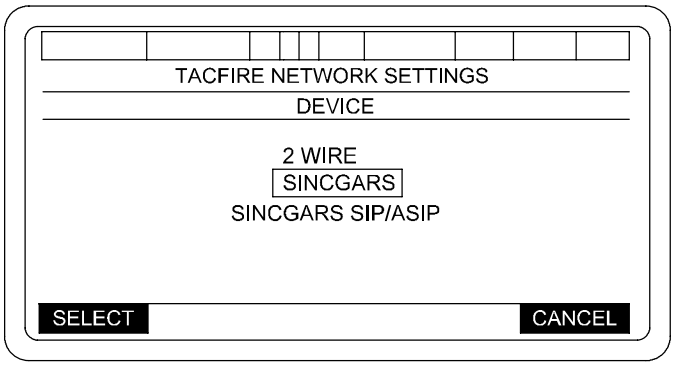


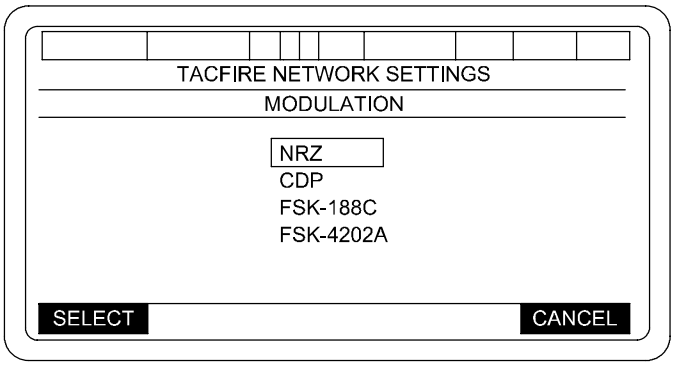


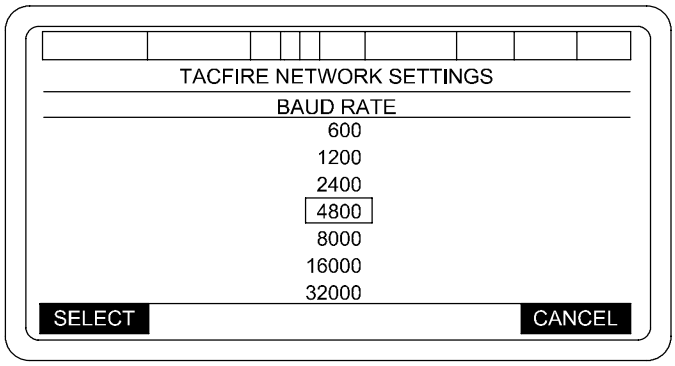


06pc309tc

(4) NET ACCESS DELAY (SECONDS) selection - Selects proper transmission delay time to maintain network access order assigned to various subscribers. To enter a new NET ACCESS DELAY time, box in new time. The operator is then prompted to enter a value for the "NET ACCESS DELAY" in seconds. The valid range is 0.5 seconds to 49.5 seconds in 0.5-second increments.

# N-6 AFCS INITIALIZATION - CONTINUED

## N-6.2 Initializing - Continued

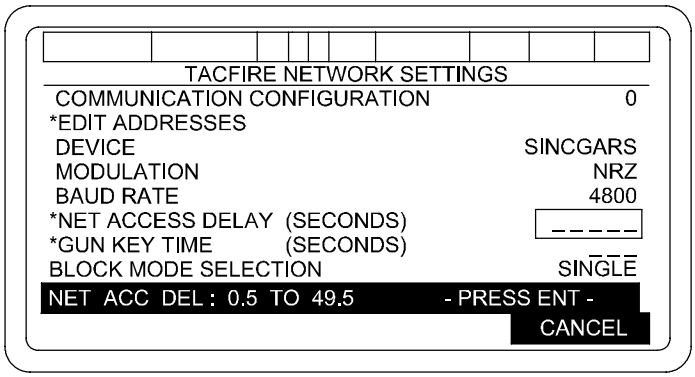


06pc305ta

(5) GUN KEY TIME (SECONDS) selections - Selects assigned transmit delay time. This stabilizes the communications link and allows radio to reach full transmit power before digital data message is sent. When GUN KEY TIME is selected from TACFIRE NETWORK SETTINGS menu, a GUN KEY TIME menu is displayed. box in proper time. Press SELECT softkey. This will enter data and return to TACFIRE NETWORK SETTINGS menu (new GUN KEY TIME will be shown).

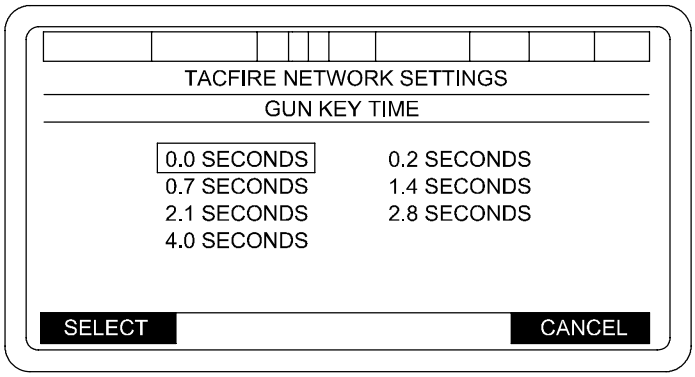


06pc306ta

(6) BLOCK MODE selection - Selects single-block or double-block mode transmission of each data block. Double-block transmission provides for each block to be transmitted twice. when the BLOCK MODE SELECTION is selected, TACFIRE NETWORK SETTINGS - BLOCK MODE will appear with present block mode boxed in. After selection is made, TACFIRE NETWORK SETTINGS display will be shown with the new data in proper field. (Other data will remain unchanged). Double-block mode will be used when requested by Platoon Operations Center (POC).

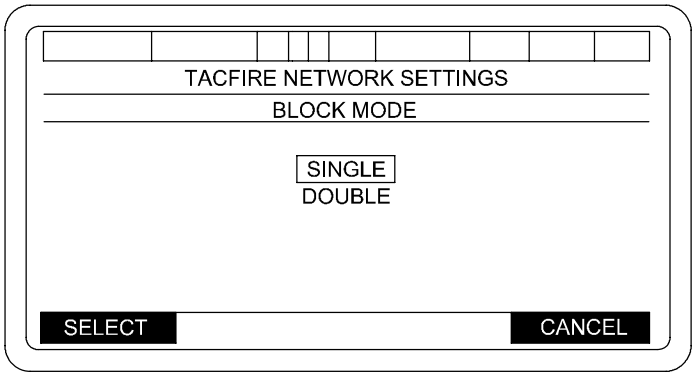


06pc303ta

# N-6 AFCS INITIALIZATION - CONTINUED

## N-6.2 Initializing - Continued

(7) NET BUSY SENSE OVERRIDE selection - Used to force a message through when communication net is degraded or jammed (message traffic or noise is sensed by communications processor). Selecting NET BUSY SENSE OVERRIDE (ON) when other subscribers are transmitting can cause message errors in radio traffic, and denies the other subscribers access. Consult unit SOP for proper use of NET BUSY SENSE OVERRIDE and press SELECT key. A TACFIRE NETWORK SETTINGS menu will be displayed showing present status boxed in. After proper selection, YES or NO is made, new data will be shown in the proper field. (Other data remains unchanged.)

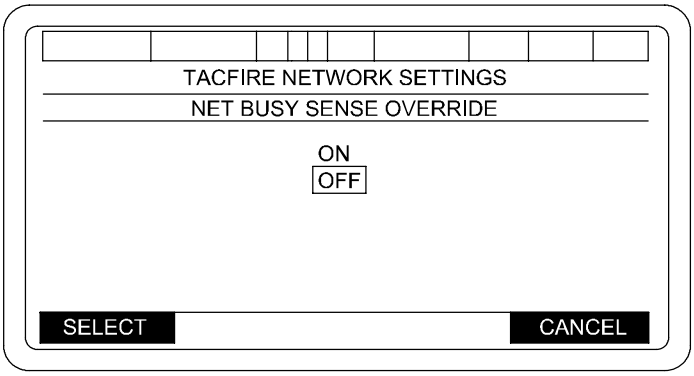


06pc304ta

Softkey sequencing shall be as follows:

- USE ALL - If any selection is marked with an asterisk (*), the following message is displayed:
  "CLEAR *ASTERISKS* TO CONTINUE" "ACK"
  If all asterisks have been cleared, control transitions to NETWORK display.
- VIEW - Control transitions to display all protocol and address information for review using the same format as actual selection displays except fields cannot be selected.
- CANCEL - Discard any changes and control transitions to NETWORK display.

g. 188-220 Network Addresses (Basic).

**NOTE**

Each selection that requires configuration will be marked with an asterisk (*). The following values are required: PALADIN URN, PALADIN RANK, PALADIN GUN, Controlling FDC URN, Controlling FDC RANK. Once the selection has been configured, the asterisk will be cleared.

SELECT softkey - Selects currently boxed selection. Transition of control depends on currently selected menu item as described below:

(1) CONTROL Row selection—If current controlling FDC is the primary FDC, the following message is displayed:
"CHANGE TO BACKUP?" "YES" "NO"
If the current control FDC is the backup FDC, the following message is displayed:
"CHANGE TO PRIMARY?" "YES" "NO"
If NO is selected, no changes will be made.
If YES is selected, the controlling FDC value shall be toggled with its current state.

# N-6 AFCS INITIALIZATION - CONTINUED

## N-6.2 Initializing - Continued

(2) URN Column selection—Prompts the operator to enter a URN value ranging from 0 to 16,777,214. When the ENT key is pressed, the values shall be checked for duplicate URN values.
If a duplicate value is found, the following message will be displayed:
"DUPLICATE VALUE-REENTER" "ACK"
Once the message is acknowledged, the operator is required to enter a new URN or press CANCEL softkey.

(3) RANK Column selection—Prompts the operator to enter AFCS station rank range 1 to 31. When the ENT key is pressed, values will be checked for duplicate Station Rank values. If a duplicate value is found within the current configuration, the following message will be displayed:
"DUPLICATE VALUE-REENTER" "ACK".
Once the message is acknowledged, the operator is required to enter a new Station Rank value or press CANCEL.

If the Rank entered exceeds the Number of Stations value, the Number of Stations shall be set to the Rank value entered and the following message shall be displayed:
"NUMBER OF STATIONS SET TO XX" "ACK"
Where XX is the Rank value entered. Once the message is acknowledged, control transitions back to 188-220 Networks Addresses (Basic).

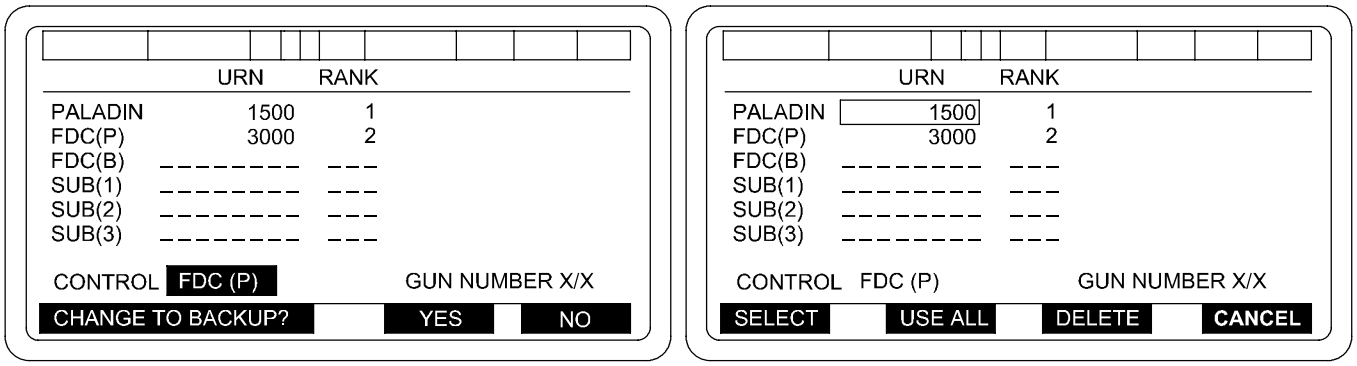


06pc302t

(4) GUN NUMBER Column selection - Control transitions to 188-220 NETWORK SETTINGS - GUN NUMBER display.

Softkey sequencing shall be as follows:

- USE ALL softkey - The following validity checks will be performed. If all are valid, control shall transition to 188-220 NETWORK SETTINGS. If any menu selections are marked with an asterisk (*), the following message will be displayed:
"CLEAR *ASTERISKS* TO CONTINUE" "ACK"
Address Completion Check - If a subscriber entry line has been incompletely defined (URN defined and Rank not defined, or Rank defined and URN not defined), then the following message will be displayed:
"INCOMPLETE ADDRESS XXXXXX", "ACK"
Where "XXXXXX" identifies the incomplete subscriber: FDC(P), FDC(B), SUB(1), SUB(2) or SUB(3).

# N-6 AFCS INITIALIZATION - CONTINUED

## N-6.2 Initializing - Continued

- DELETE softkey—Allows the operator to delete the currently boxed URN or Rank. The following message will be displayed:
  "DELETE ADDRESS", "YES" "NO"
  If NO is selected, no changes will be made.
  If YES is selected, the current selection is deleted and its value displayed as a dashed value.
  Pressing the DELETE softkey when Control FDC selection is boxed will have no effect.
- CANCEL softkey - Discards any changes made to the addresses, control transitions to 188-220 NETWORK SETTINGS.

h. 188-220 Network Settings—Gun Number Display.

Softkey sequencing shall be as follows:

- SELECT - Selects the gun number currently boxed, and assigns it as the gun number for the AFCS address. Control then transitions to 188-220 NETWORK ADDRESSES (Basic).
- CANCEL - Allows the operator to exit the screen without making any changes. Control then transitions to 188-220 NETWORK ADDRESSES (Basic).

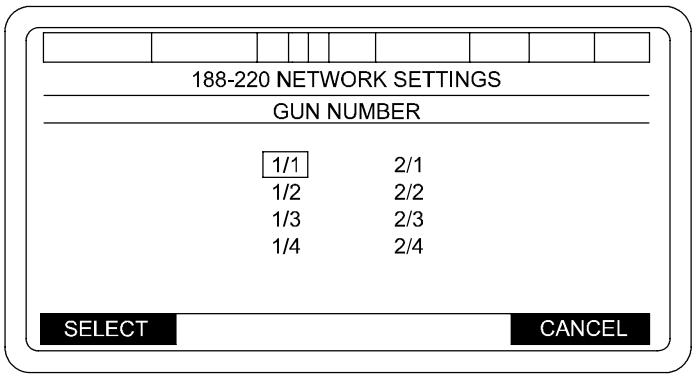


06pc300ta

i. TACFIRE Network Addresses.

Each selection that requires configuration is marked with an asterisk (*). The following values are required:

PALADIN URN
PALADIN Physical Address
PALADIN Broadcast Address
GUN
Controlling FDC URN
Controlling FDC Physical Address

SELECT softkey - Selects the currently boxed selection. Transition of control depends on currently selected menu item as described below:

(1) CONTROL Row selection - If current controlling FDC is the primary FDC, the following message is displayed:
"CHANGE TO BACKUP?" "YES" "NO"
If the current controlling FDC is the backup FDC, the following message is displayed:
"CHANGE TO PRIMARY?" "YES" "NO"
If NO is selected, no changes are made.
If YES is selected, the controlling FDC value shall be toggled with its current state.

# N-6 AFCS INITIALIZATION - CONTINUED

## N-6.2 Initializing - Continued

(2) URN Column selection - Prompts the operator to enter a URN value. The valid range is 0 to 16,777,214. When the ENT key is pressed, the values are checked for duplicate URN values.
If a duplicate value is found within the current configuration, the following message is displayed:
"DUPLICATE VALUE-REENTER" "ACK"
Once the message is acknowledged, the operator is required to enter a new URN or press CANCEL softkey.

(3) PHYSICAL Column selection - Control transitions to NETWORK SETTINGS - TACFIRE ADDRESSES with currently selected subscriber identified in the subtitle.

(4) BROADCAST Column selection - Control transitions to NETWORK SETTINGS - TACFIRE ADDRESSES with the AFCS Broadcast Address identified in the subtitle.

(5) GUN NUMBER selection - Control transitions to TACFIRE NETWORK SETTINGS - GUN NUMBER.

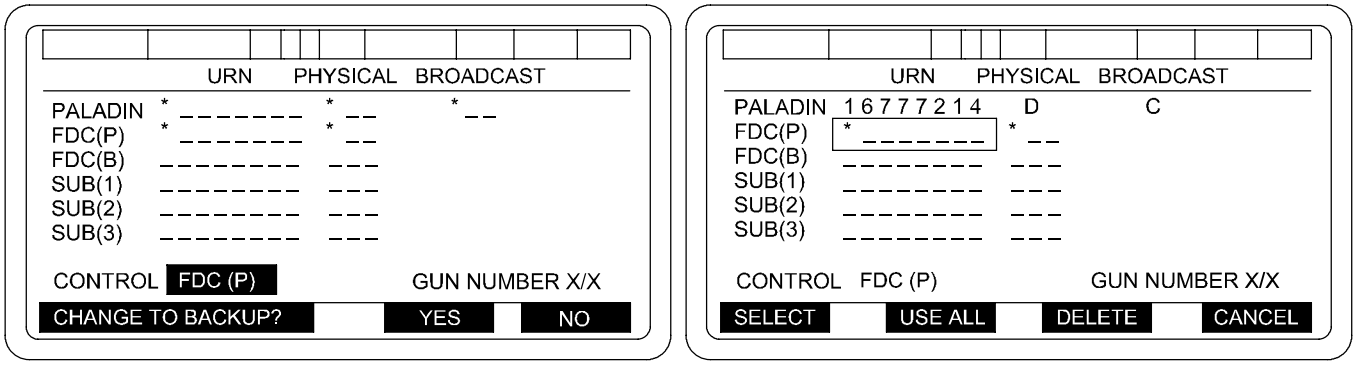


06pc301ta

Softkey sequencing shall be as follows:

- USE ALL - If any selection is marked with an asterisk (*), the following message is displayed:
"CLEAR *ASTERISKS* TO CONTINUE" "ACK"
If a subscriber entry line is incompletely defined (URN defined and Address not defined, or Address defined and URN not defined), then the following message is displayed:
"INCOMPLETE ADDRESS XXXXXX", "ACK"
Where "XXXXXX" identifies the incomplete subscriber: FDC(P), FDC(B), SUB(1), SUB(2) OR SUB(3).
If all asterisks are cleared, the address information shall be saved and control transitions to TACFIRE NETWORK SETTINGS.

- DELETE - Allows the operator to delete the currently boxed URN or address value. The following message will be displayed:
"DELETE ADDRESS" "YES" "NO"
If NO is selected, no changes are made.
If YES is selected, current selection is deleted, and its value displayed as a dashed value.
Pressing the DELETE softkey when Control FDC selection is boxed will have no effect.

- CANCEL - Disregards any changes made to the addresses and control transitions to TACFIRE NETWORK SETTINGS.

# N-6 AFCS INITIALIZATION - CONTINUED

## N-6.2 Initializing - Continued

j. Network Settings - TACFIRE Addresses Display.

**NOTE**

The screen subtitle will display which value is being entered as follows:

PALADIN PHYSICAL ADDRESS
PALADIN BROADCAST ADDRESS
PRIMARY FDC ADDRESS
BACKUP FDC ADDRESS
OTHER SUBSCRIBER (1) ADDRESS
OTHER SUBSCRIBER (2) ADDRESS
OTHER SUBSCRIBER (3) ADDRESS

Addresses currently assigned, with the exception of the address for the value displayed in the subtitle, is not selectable.

Softkey sequencing shall be as follows:

- SELECT - Selects the value currently boxed, and assigns it as the address for the device displayed in the subtitle. Control then transitions to TACFIRE NETWORK ADDRESS.
- CANCEL - Control transitions to TACFIRE NETWORK ADDRESSES without making any changes.

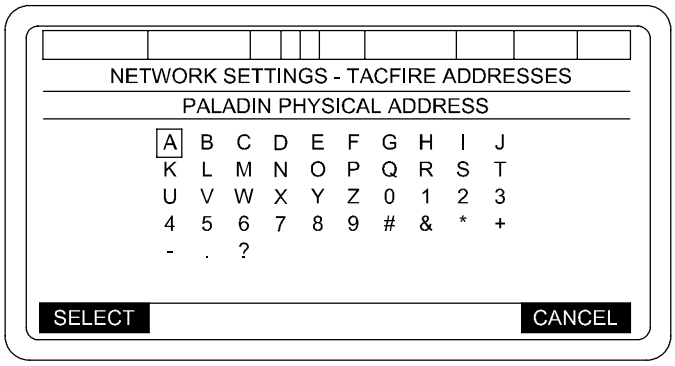


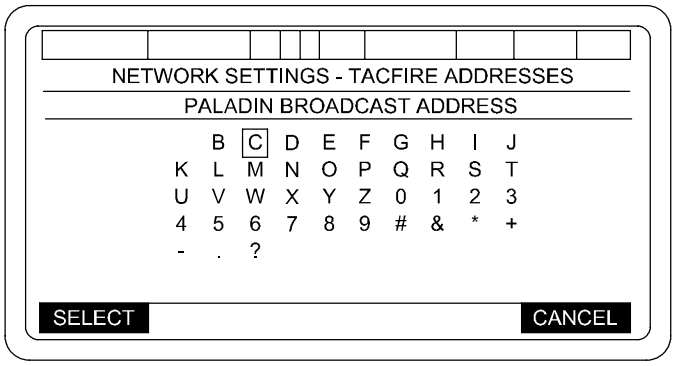


06pc299ta

# N-6 AFCS INITIALIZATION - CONTINUED

## N-6.2 Initializing - Continued

k. TACFIRE Network Settings - Gun Number Display.

Softkey sequencing shall be as follows:

- SELECT - Selects the gun number currently boxed, and assigns it as the gun number for the AFCS address. Control then transitions to TACFIRE NETWORK ADDRESSES.
- CANCEL - Allows the operator to exit the screen without making any changes. Control then transitions to TACFIRE NETWORK ADDRESSES.

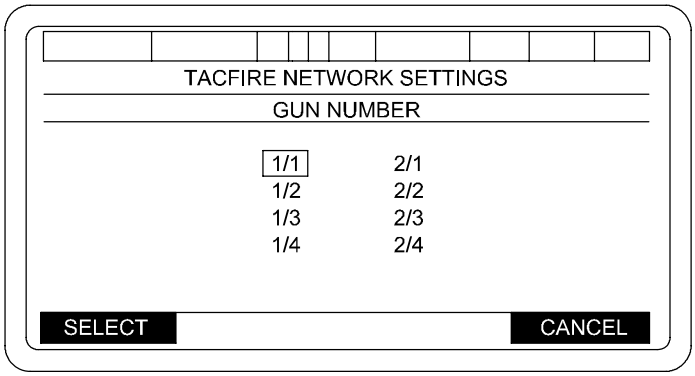


06pc300tf

l. Other Initialization Steps. When NETWORK has been initialized, a SETUP AND INFORMATION menu will be displayed. There are two pages to this menu. By pressing NEXT PAGE key, second page will be displayed.

### NOTE

- Items marked with an asterisk (*) must be entered to complete initialization process. Without these data entries, the system will not be completely initialized and the AFCS will not be able to receive a mission. The AFCS will automatically move the cursor box to the next item that as an asterisk (*) each time initialization of a particular item has been completed.
- The NAV UPDATE selection will be blank when a command has been sent to the navigation subsystem and has not yet been completed.
- During initialization, certain items will not appear. These items become available following completion of initialization.
- If the AFCS has a valid NVM, the FAST INIT softkey will be available during initialization. Pressing the FAST INIT softkey will clear the asterisk (*) from the FDC DATA XFER, AMMO INVENTORY, PROP TEMP, and TOTAL RESPONSE fields.

# N-6 AFCS INITIALIZATION - CONTINUED

## N-6.2 Initializing - Continued

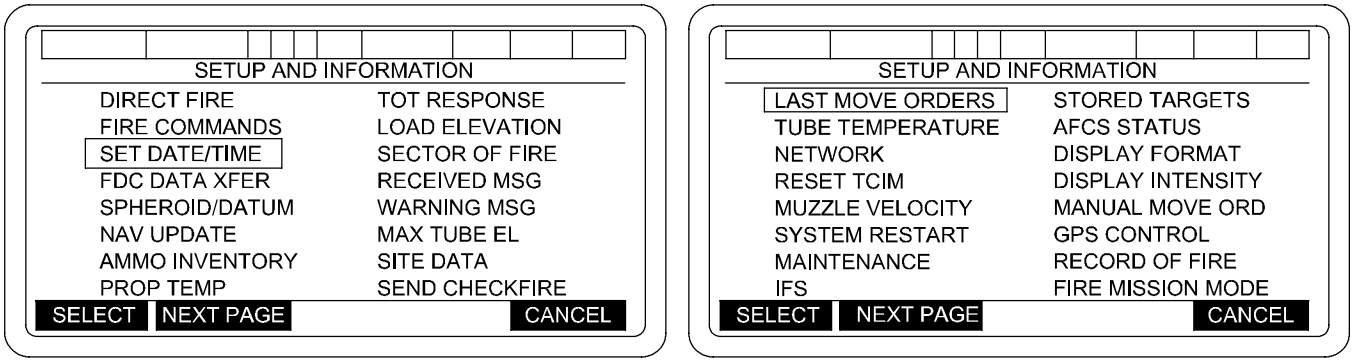


06pc248ta

Steps of other initialization data entry are done as follows:

(1) SET DATE/TIME Group - This data is required for proper communications and is used for TOT data and other time related tasks and missions. From SETUP AND INFORMATION menu, box in SET DATE/TIME. Press SELECT key. This will cause a SET DATE/TIME Group menu to be displayed. If GPS data is available select USE GPS. Note, GPS Time is ZULU (Greenwich Mean Time) when USE GPS selected, all times will be aligned to ZULU (Local ZULU and GPS). If GPS data is not available or if POC has instructed you not to use GPS proceed as follows:

(a) Enter two digits each for Year, Month, Date, Hour and Minute into boxed-in area.

(b) If a mistake is made prior to typing in all ten digits, press CLR key and try again. If all ten digits have been typed in, then menu will automatically show a SET DATE/TIME GROUP display with prompt.

(c) If incorrect data has been typed in after all 10 digits have been entered, press CANCEL key. This will return display to SET DATE/TIME menu. Then proceed with reentering correct data for Date/Time Group.

(d) To ensure proper time synchronization between the AFCS and POC/FDC, a countdown to MARK should be controlled by the POC. If data is correct when MARK is announced by POC, press MARK key to start the clock. This will return the display to the SETUP AND INFORMATION menu.

(e) Date/Time setting on system - Defaults to system clock if no other input is entered in. FDC and the AFCS messages will be rejected if more than 60 minutes difference between FDC time and AFCS time has elapsed. Unit SOP needs to be in real Date/Time.

# N-6 AFCS INITIALIZATION - CONTINUED

## N-6.2 Initializing - Continued

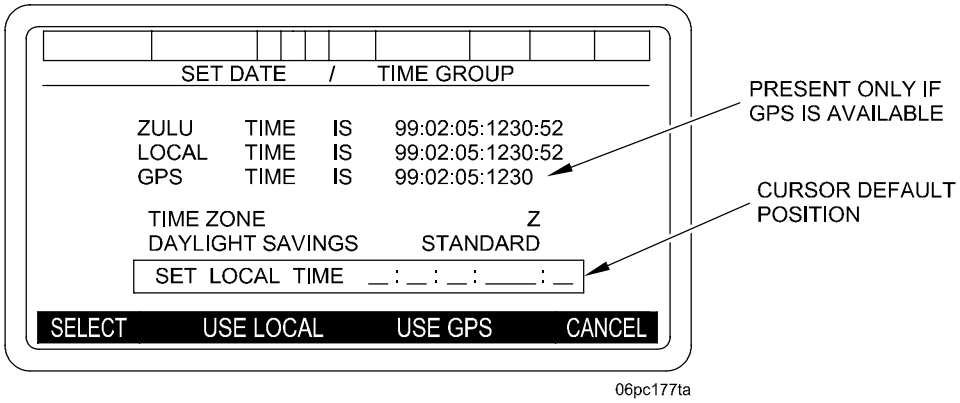


06pc177ta

### NOTE

Upon entering the Current DTG, Current Zulu, and Current GPS time, if available, shall be displayed to the operator. Operator must enter Time Zone, Daylight Savings and NEW DTG. The first time the AFCS-XXI program is executed the Zulu and Local time will be calculated from the hardware clock.

SELECT TIME ZONE - Enter SELECT TIME ZONE in accordance with unit SOP.

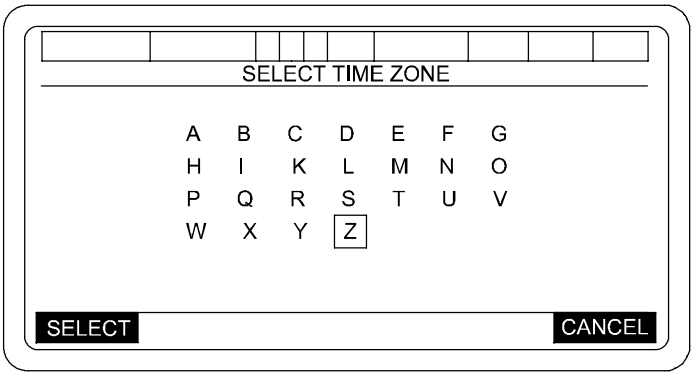


06pc178ta

SELECT DAYLIGHT SAVINGS - Enter SELECT DAYLIGHT SAVINGS TIME in accordance with unit SOP.

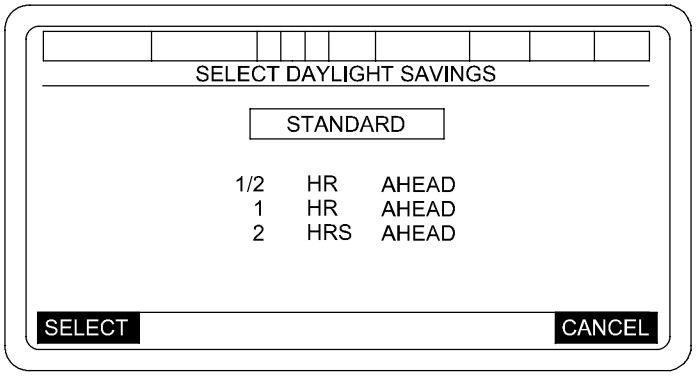


06pc179ta

# N-6 AFCS INITIALIZATION - CONTINUED

## N-6.2 Initializing - Continued

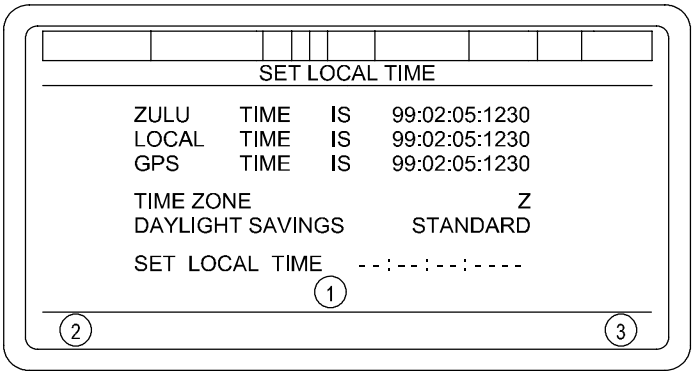


06pc180td

1

TYPE IN NEW DTG - YY:MM:DD:HHMM = Shall appear below the SET LOCAL TIME row upon entry to display above menu. Operator must enter date in format displayed (YY:MM:DD:HHMM). Operator may press CLEAR any time to reset entry. The year must be entered in two-digit format in the range of 0-99.

PRESS MARK TO SET LOCAL TIME = Shall appear below the SET LOCAL TIME row upon entry of the last digit of the minute.

2

MARK = The MARK key shall be displayed upon entry of the last digit of the minute. When the MARK key is pressed the Local Time shall be processed and returned to the SET UP AND INFORMATION menu.

INVALID DTG VALUE ACK = If an invalid DGT is entered, this error shall be displayed to the operator. Press "ACK" and re-enter the date and time.

3

CANCEL = When PRESS MARK TO SET LOCAL TIME is displayed and the CANCEL key is pressed the SET LOCAL TIME entries shall be cleared and the operator shall be able to enter a new LOCAL TIME.

= When the CANCEL key is pressed under all other conditions to display the SETUP AND INFORMATION menu will be displayed.

Date/Time setting on System - Defaults to system clock if no other Input is recorded in FDC and AFCS. Messages will reject if more than 60 minutes has elapsed. Unit SOP needs to be in real Date/Time.

# N-6 AFCS INITIALIZATION - CONTINUED

## N-6.2 Initializing - Continued

### NOTE

- The FDC data transfer must be done each time you initialize the AFCS, if the FDC is operational.
- AFCS will disable the capability of the operator to sent SITE DATA (Mask), AMMO STATUS, GEOMETRIES (SFA) or RECORD OF FIRE data when not available by suppressing their display on the FDC DATA TRANSFER display.
- Selection of FDC DATA XFER during initialization (first selection only) will cause the GET INITIALIZATION field to be boxed and “ARE YOU SURE?” prompt to appear.

(2) FDC DATA XFER - To get initialization data from the POC/FDC, box in FDC DATA XFER and then press SELECT key. This will cause a FDC DATA XFER menu to be displayed with INITIALIZATION already boxed and Operator Alert. Pressing YES key will send a request to POC/FDC for needed data. Data includes: Subscriber File Message, Map Modification Input Message, Computer Meteorological Message, and Registration Data Input Message. This ensures that operator can properly communicate with other subscribers and can compute fire mission accurately. If NO ACK REQ INIT is displayed, contact POC to ensure that proper initialization has taken place. Repeat procedure if required. When initialization is complete, press CANCEL key.

If FDC DATA XFER does not have an asterisk (*), then pressing the SELECT key will cause a FDC DATA XFER menu to be displayed without INITIALIZATION boxed. Box in INITIALIZATION and press SELECT key to provide the Operator Alert. Pressing YES sends the request to POC/FDC as described above.

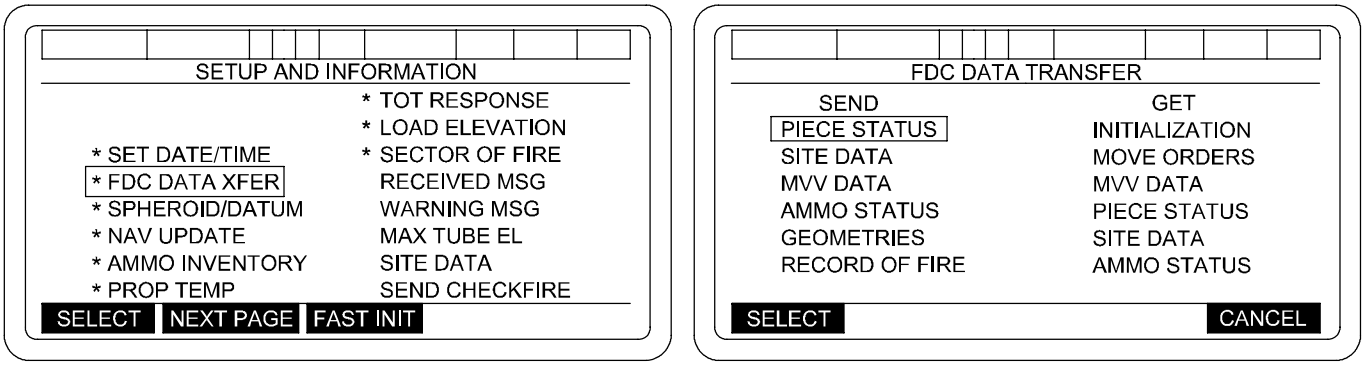


06pc323t

SELECT softkey - The following message will be displayed:
“ARE YOU SURE?” “YES” “NO”

CANCEL softkey - Selection of of this key will transition display back to the SETUP AND INFORMATION screen without cancelling any SEND or GET requests.

# N-6 AFCS INITIALIZATION - CONTINUED

## N-6.2 Initializing - Continued

(3) SELECT SPHEROID/DATUM -The FDC DATA XFER, INITIALIZATION data includes a SPHEROID/DATUM.

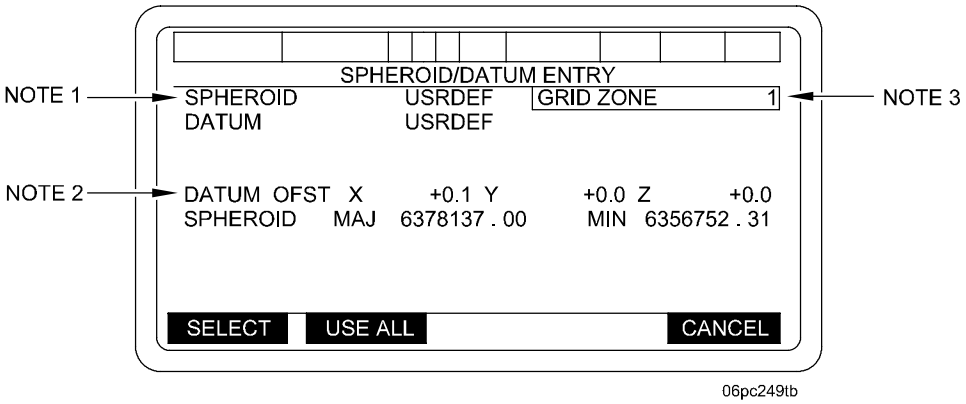


06pc249tb

Check to see if all the data is correct. If it is correct, press the USE ALL key, and proceed with the initialization. If an entry is not correct, select that field and make corrections.

NOTE 1 Selection of this field will display SELECT SPHEROID Menu.

NOTE 2 Field is only present if user defined (USRDEF) SPHEROID is used. modifiable.

NOTE 3 When GRID ZONE is selected the following will be displayed:

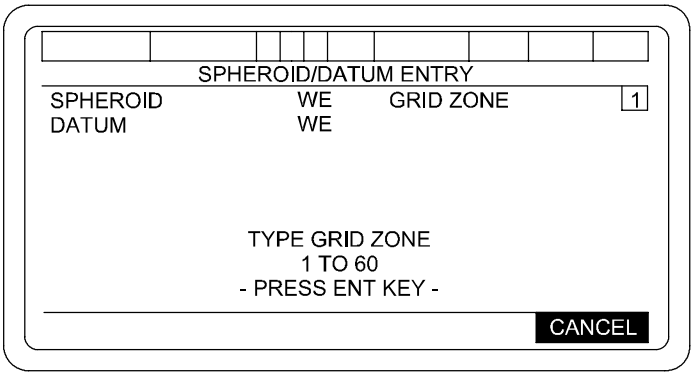


06pc250ta

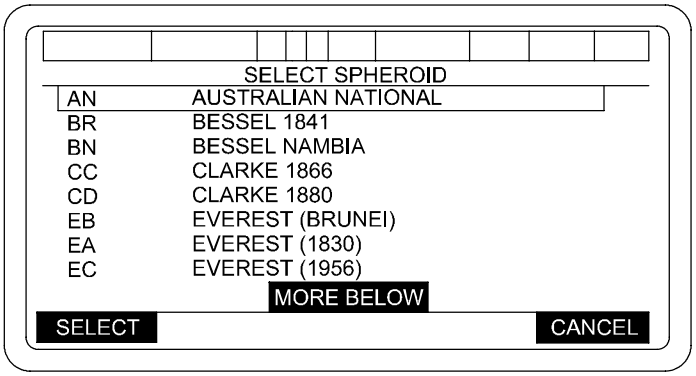


06pc251ta

When more than one page is required to display choices, scrolling shall be enabled and “MORE BELOW” or “MORE ABOVE” will be displayed.

# N-6 AFCS INITIALIZATION - CONTINUED

## N-6.2 Initializing - Continued

Enter the defined SPHEROID, PRESS the SELECT softkey and the SELECT DATUM menu will be displayed. Refer to Tables in Appendix J.1 for SPHEROID listings.

Softkey sequencing shall be as follows:

1. If USRDEF is boxed in and SELECTED then the ENTER USER DEFINED SPHEROID MAJOR AXIS menu will be displayed.
2. If any other SPHEROID is SELECTED then the SELECT DATUM menu will be displayed to force SELECTION of the DATUM.
3. If CANCEL, then the SPHEROID/DATUM menu will be displayed.

Maps are based upon a “reference datum”. This is really the model of the Earth that the cartographer uses when making a map. The reference datum consists of two parts, the spheroids and the datum offsets.

The Earth is really not a perfectly round globe but is a little “fatter” at the equator. Therefore, the mapmaker uses a spheroid rather than a globe to describe the Earth’s shape. Instead of just using one radius as one would do to describe a globe, two values are used. The first is the semi-major axis. It is the radius of the Earth at the equator. The second number is the semi-minor axis. It is the distance from the center of the Earth to the poles. It is slightly smaller than the semi-major axis. (The WGS 84 model of the Earth uses a semi-major axis of 6,378,137 meters and 6,356,752 meters for the semi-minor axis).

The cartographer may choose to base his model of the Earth’s surface using a center point that is different from the true center of the Earth. This offset of the center point is described by three “datum offset” values: delta X, delta Y, and delta Z. These values are typically a few hundred meters.

There are many standard spheroid and datums commonly used for maps. If the spheroid/datum is not supplied by a message from FDC, the AFCS operator will be told to select a certain spheroid and datum at the display unit. The starting point for entering this data is the SPHEROID/DATUM display.

The spheroid is selected using the SELECT SPHEROID sub-display. This display lists choices. It is possible to use spheroid values different from the ones in the display lists. The different values are entered as “user defined”. This is selected by the USRDEF option listed as a choice for a spheroid. If the operator selects USRDEF, other sub-displays prompt him to enter the semi-major and semi-minor axis. These values must be obtained from the POC and should only be used with guidance from Battery Commander.

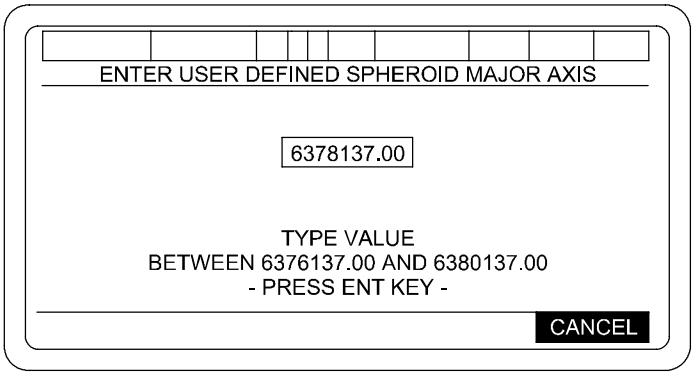


06pc252td

1. Any unedited DATA fields remain at their current values when ENT is pressed.
2. Enter the appropriate value and press ENT key. The USER DEFINED SPHEROID MINOR AXIS menu will be displayed.

# N-6 AFCS INITIALIZATION - CONTINUED

## N-6.2 Initializing - Continued

3. If the CANCEL key is selected, the SELECT SPHEROID menu will be displayed.

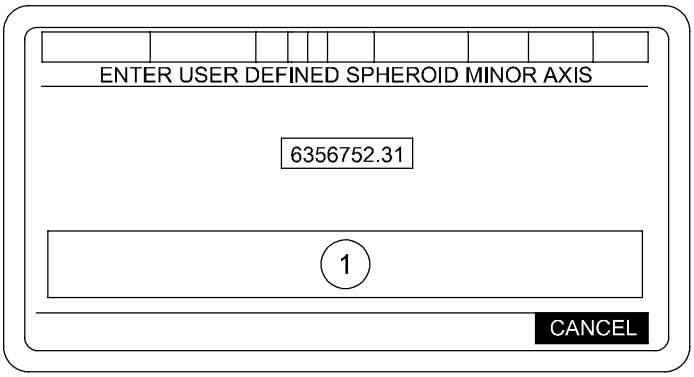


06pc252tf

(1) TYPE VALUE
BETWEEN XXXXXXX.XX AND YYYYYYY.YY
PRESS ENT KEY

Where XXXXXXX.XX and YYYYYYY.YY are the minimum and maximum allowable values for the semi-minor axis, which will appear after entry into this screen.

1. Any unedited DATA fields remain at their current values when ENT is pressed.
2. Enter the appropriate value and press ENT key. The CONFIRM USER DEFINED SPHEROID AXIS menu will be displayed.
3. If the CANCEL key is selected, the ENTER USER DEFINED SPHEROID MAJOR AXIS menu will be displayed.

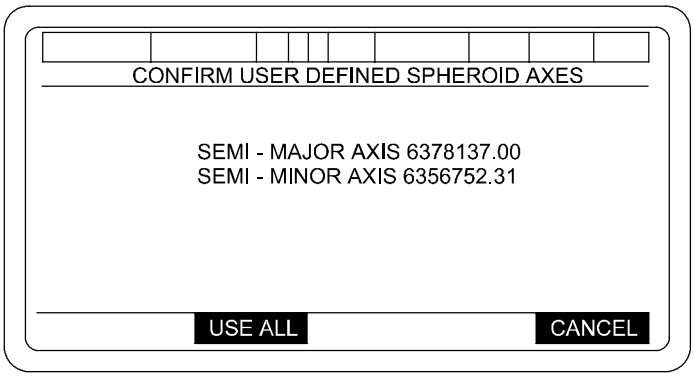


06pc252te

Softkey sequencing shall be as follows:

If **CANCEL**, then ENTER USER DEFINED SPHERIOD MINOR AXIS menu will be displayed.

If **USE ALL**, then the SELECT DATUM menu will be displayed.

The datum offset is selected using the SELECT DATUM sub-display. This display lists valid choices listed by an alphabetic code. It is possible to use datum offset values different from the ones in the display lists. The different values are entered as “user defined”. This is selected by the USRDEF option listed as a choice for a datum offset. The datum offset values are entered using the ENTER USER DATUM PARAMETERS sub-display. The offset values are listed as DATUM OFFSET X, Y, and Z.

# N-6 AFCS INITIALIZATION - CONTINUED

## N-6.2 Initializing - Continued

There is a restriction on the use of user defined spheroid and datum. The operator cannot use a new user defined spheroid if current spheroid selection is user defined. Likewise, the operator cannot select a new user defined datum selection if the current datum selection is user defined. If the operator wants to go from a user defined datum to a new user defined datum, the operator should simply select any standard datum and then enter the new user defined. Likewise, if the operator wants to go from a user defined spheroid to a new user defined spheroid, the operator should simply select any standard spheroid and then enter the new user defined.

When DATUM is selected, SELECT DATUM menu is displayed:

**NOTE**

The DATUMS displayed are dependant on the SPHEROID selected.

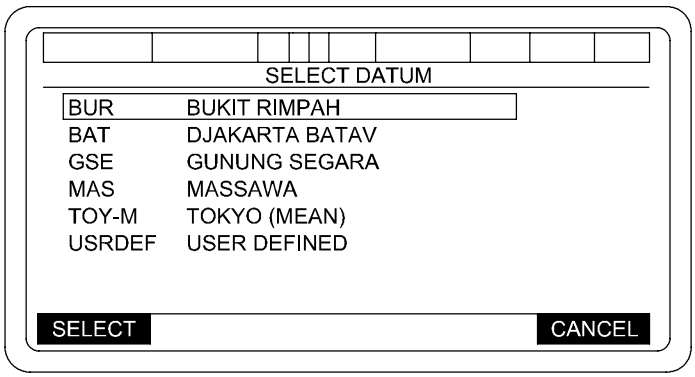


06pc253ta

If CANCEL then the SPHEROID/DATUM ENTRY will be displayed

When more than one page is required to display choices, scrolling shall be enabled and “MORE BELOW” or “MORE ABOVE” will be displayed.

Box in the correct DATUM and press the SELECT key. The DATUMs available are dependent on the SPHEROID selected. See AFCS/FDC Spheroid and Datum table (appendix J.1).

**NOTE**

- The reference frame for UTM position coordinates is a DATUM. Typically, a local DATUM is defined by an ellipsoidal Earth model (SPHEROID) and a starting point (origin) for the coordinate system. Coordinates on a map or in a Trig list (SCPs) often are on a Local DATUM. An example of a Local DATUM is the North American 1927 (NAD 27) DATUM used in the United States.
- There have been many different Local DATUMs developed. GPS computes position on the World Geodetic System 1984 (WGS 84), a worldwide coordinate system. To use GPS with coordinates on a Local DATUM, the coordinates must be mathematically shifted. The AFCS (DRUH and PLGR) can automatically perform DATUM shifting, but first the operator must select the Local DATUM to be used, or provide the appropriate shift parameters. For AFCS operation, Local DATUMs are represented by two sets of parameters: the Local Ellipsoid (SPHEROID) and shift parameters as defined for each Local DATUM (DATUM IDs).

# N-6 AFCS INITIALIZATION - CONTINUED

## N-6.2 Initializing - Continued

### NOTE - Continued

- The FDC can provide the SPHEROID. The SPHEROID selected will determine which DATUM IDs will be available for selection. The AFCS/FDC SPHEROID and DATUM TABLE provides the SPHEROID number for the AFCS and FDC, which DATUM IDs are available, in Appendix J.1, for that SPHEROID number and the normal coverage area. Note that there may be more than one DATUM ID associated with a Local DATUM because the shifts vary by locality. For other DATUMs or areas outside the indicated coverage area, User Defined (USRDEF) Datum shifts may be entered manually. The table is not intended as an absolute. A map sheet will identify the DATUM name, Ellipsoid (SPHEROID) name and the coordinate type, or the map sheet will identify the area. The data from a Trig list should identify the same information. These parameters must be correlated to the DATUM ID. If the applicable DATUM hasn't been programmed in the AFCS, shift parameters for many other DATUMs and regions have been published in DMA TR 8350.2 and may be entered thru the DATUM X, Y, and Z OFFSETs. Note that the AFCS cannot accept shift parameters for all DATUMs because its SPHEROID capability is limited to those listed in the AFCS/FDC Spheroid and Datum table in Appendix J.1.

If the DATUM USRDEF is selected, then the DATUM X, Y, and Z offsets must be entered. These values must be obtained from the POC and should only be used with guidance from Battery Commander.

The ENTER USER DATUM PARAMETERS page should look like:

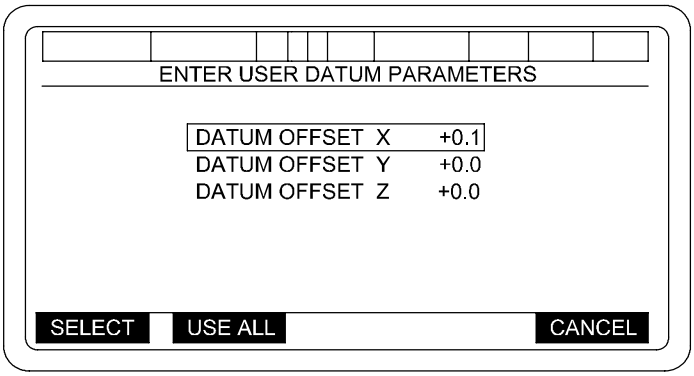


06pc254ta

- When field selected:
  TYPE OFFSET
  BETWEEN -2000.0 AND +2000.0
  -PRESS ENT KEY-
- When field selected: + / -
  Otherwise: USE ALL
- When no fields are selected: SELECT
  Otherwise: BLANK

### NOTE

Any un-edited DATA fields remain at their current values when USE ALL key is pressed.

Softkey sequencing shall be as follows:

If CANCEL, then the SELECT DATUM menu will be displayed.

If USE ALL, then the ENTER SPHEROID/DATUM ENTRY menu will be displayed.

If CANCEL is selected, all information up to this point will be deleted.

# N-6 AFCS INITIALIZATION - CONTINUED

## N-6.2 Initializing - Continued

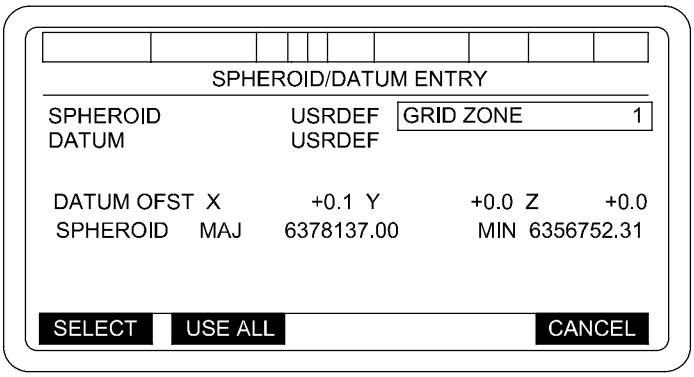


06pc270ta

If **USE ALL** is selected, all information will be locked in and the SETUP AND INFORMATION MENU will be displayed.

(4) NAV UPDATE - Navigation Subsystem Update is performed as follows:

(a) With the Gun Tube in Travel Lock, park the howitzer at a known Survey Control Point (SCP) with the left sprocket within one meter of SCP.

(b) Box in *NAV UPDATE and press the SELECT softkey. This will bring up the NAVIGATION SUBSYSTEM UPDATE menu.

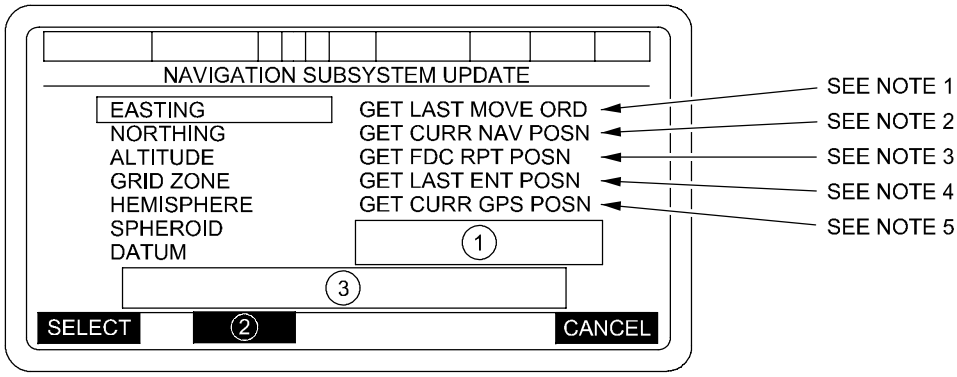


06pc188ta

# N-6 AFCS INITIALIZATION - CONTINUED

## N-6.2 Initializing - Continued

**NOTE**

The datum to be used is selected from the SETUP AND INFORMATION menu (Enter MAP/DATUM menu)

(1) This field contains OPERATOR PROMPTS and selections which depend on the current status of the NAVIGATION SUBSYSTEM

(2) When ALTITUDE SELECTED - **+/-**

otherwise - **USE ALL**

(3) This field contains OPERATOR PROMPTS for updating the values of: EASTING, NORTHING, ALTITUDE, and GRID ZONE:

When EASTING is selected:
Type EASTING 1 to 999999
Press ENT key

When NORTHING is selected:
Type NORTHING 0 to 9999999
Press ENT key

When ALTITUDE is selected:
Type ALTITUDE -400 to 9999
Press ENT key

When GRID ZONE is selected:
Type GRID ZONE XX, YY, or ZZ
Press ENT key
Where XX, YY, and ZZ are dependent on the Grid Zone (GZ) previously entered on the SPHERIOD/DATUM display. XX identifies the GZ to the west of the entered GZ, YY is equal to the entered GZ and ZZ identifies the GZ to the east of the entered GZ.

HEMISPHERE = NORTH or SOUTH
SPHEROID = 1 . . 9 and A . . I and USRDEF (not modifiable by operator)
DATUM = See AFCS/FDC Spheroid and Datum table in appendix J.1 (not modifiable by operator on this display).

NOTE 1: Blank if no Move Order occurred since the last power up of the AFCS.

NOTE 2: Blank when Navigation Subsystem is not available.

NOTE 3: Available if position data has been sent from the FDC. Selection disappears when AFCS operator performs Nav Update or Move Order.

NOTE 4: Last coordinates on which position update was performed. Blank if operator has pressed the ARRIVED key at a position area since the last position update.

NOTE 5: Field is blank when the following conditions exist:
a. Navigation subsystem functionality not currently available.
b. GPS position data not currently available from the Navigation subsystem.
c. The GPS position data currently available has an estimated probable error greater than the navigation devices' "poor GPS data limit".
If the available GPS data has an estimated probable error greater than the Navigation device "Good GPS data limit", but less than or equal to the navigation device "Poor GPS data limit" when this menu item is selected, then the following alert will be placed on the softkey line:
USE DGRD GPS DATA? YES NO
If the YES softkey is pressed, then the available GPS data shall be used to update the listing, Northing, and Altitude fields on the menu. If the NO softkey is pressed, then the Easting, Northing, and Altitude fields on the menu will not be updated with the available GPS data.

# N-6 AFCS INITIALIZATION - CONTINUED

## N-6.2 Initializing - Continued

(c) Operator warning/alerts - When USE ALL is selected and the coordinate data entered does not correlate with the other data the following messages will be displayed:

1. "POSITION COORDINATES INVALID" and "RE-ENTER VALUE ACK" when the local UTM coordinate does not transform to WGS 84.
2. "NORTHING VALUE NOT VALID" and "RE-ENTER VALUE ACK" when the entered Northing coordinate is invalid when correlated with other entered data.
3. "EXCEEDED 84N OR −80S LATITUDE" and "RE-ENTER VALUE ACK" when the latitude does not correlate with the local UTM to WGS 84 transformation.

If the operator attempts to enter a position that is more than one grid zone away, then the AFCS will revert to the default value of 500000 E and 0 N in the current gridzone with no warnings.

If operator selects GET LAST ENT POSN on the NAV UPDATE screen, AFCS will display the last data that was entered when operator selected USE ALL while conducting a position update. The AFCS will suppress the GET LAST ENT POSN entry once the Paladin moves and arrives at a new location (INIT, LOG, FIRE PT, or FIRE AREA).

**NOTE**

Perform the following steps in accordance with unit SOP.

(d) RESTART REQUIRED - This prompt will appear in field (1). With the gun tube in travel lock, the Howitzer must be positioned at a Survey Control Point (SCP) with the left front sprocket within one meter on the SCP. No selection of RESTART REQUIRED is required, it will happen automatically and a full alignment will be performed. Enter the SCP data of EASTING, NORTHING ALTITUDE and GRID ZONE. When all data is entered, double check the SCP coordinates and SPHEROID/DATUM and HEMISPHERE displayed on the screen. If it is not correct, make any correction. If it is correct, press the USE ALL softkey. The following prompt will be displayed:

"NAV POSITION UPDATE ABOUT TO START" "ARE YOU SURE" "YES" "NO"

Press the YES softkey, and the Navigation Position Update will be started. The SETUP AND INFORMATION menu will appear. The prompt CMD will appear in field (6), and then be replaced by the Align Time to Go countdown. Proceed with the rest of Initialization.

(e) NAV POSITION UPDATE - If this prompt is displayed in field (1), then only a Navigation Subsystem Position Update is required. With the gun tube in travel lock, the Howitzer must be positioned at a Survey Control Point (SCP), with the left front sprocket within one meter of the SCP. Enter the SCP data of EASTING, NORTHING and ALTITUDE. When all data is entered, double check the SCP coordinates and SPHEROID/DATUM, GRID ZONE and HEMISPHERE displayed on the screen. If it is not correct, make any correction. If it is correct, press the USE ALL softkey. The following prompt will be displayed:

"NAV POSITION UPDATE ABOUT TO START" "ARE YOU SURE" "YES" "NO"

Press the YES softkey, and the Navigation Position Update will be started. The SETUP AND INFORMATION menu will appear. The prompt CMD will appear in field (6), and then be replaced by the Align Time to Go countdown. Proceed with the rest of Initialization.

(f) NAV RESTART - If the prompt NAV POSITION UPDATE is highlighted and selected, a message prompt "CHANGE TO RESTART" "YES" "NO" will appear. Press the YES softkey. "FORCE NAV RESTART" will appear. Press USE ALL then press the YES softkey to "ARE YOU SURE" prompt, the SETUP AND INFORMATION menu will be displayed and CMD will be displayed in field (6). This will be replaced with the Align Time to Go count down timer. The Navigation Subsystem aligns itself automatically.

# N-6 AFCS INITIALIZATION - CONTINUED

## N-6.2 Initializing - Continued

### NOTE

The Navigation Subsystem has 3 modes of alignment; Stored Heading Alignment, Normal Alignment and Dynamic Alignment.

1. Stored Heading Alignment - Will occur only if the previous AFCS shutdown was orderly and the Howitzer or Turret has not moved since the last shutdown. This Alignment will take a maximum of 90 seconds, and will start as soon as the power is applied to the Navigation Subsystem. A NAV UPDATE is still required. But since the Howitzer has not moved since the last shutdown, all the NAV UPDATE data should be correct and only pressing the USE ALL softkey is required. If the Howitzer has been moved since the last shutdown, or the last shutdown was abnormal, or the Howitzer was moving during the last shutdown procedure, the Stored Heading Alignment will automatically be rejected and after a NAV UPDATE is performed the Navigation Subsystem will automatically perform a Normal Align.
2. Normal Alignment - Will occur when ever a Stored Heading Alignment cannot be performed. This alignment will take a maximum of 15 minutes (900 seconds). After the NAV UPDATE is performed and accepted, the Normal Alignment will automatically start, and the Align Time to Go counter will start counting down to 0. During the countdown, a message “OK TO MOVE OR SHOOT” “ACK” may appear before the countdown reaches 0. This means the Navigation Subsystem estimated Azimuth Error is within the bounds that are safe to move or shoot. At this point, a Move Order or Fire Missions may be performed. If the PLGR/DAGR data is valid (i.e. the “A” is gone) the Align Time to Go counter will continue to countdown while the Howitzer is moving. If the PLGR/DAGR is not valid (i.e. “A” is on), the timer will stop counting during movement and ZUPTs will be requested.
3. Dynamic Alignment - A Dynamic Alignment is nothing more than a moving Normal Alignment, but the following conditions must be met: The PLGR/DAGR must have data (i.e. the “A” is gone) and a NAV UPDATE must have been performed prior to movement. If these conditions are true, then the Howitzer may be moved before the “OK TO MOVE OR SHOOT” “ACK” is displayed. Move Orders and Fire Missions cannot be performed, but as long as the PLGR/DAGR is valid (i.e. the “A” is gone), the Align Time to Go timer will continue to countdown and the Navigation Subsystem will not require a RESTART. Moving prior to the “OK TO MOVE OR SHOOT” “ACK” must be done in accordance with Unit SOP.

### NOTE

AFCS supports two modes of Navigation Update; a Position Update and a Navigation Subsystem Restart. Normally, the Navigation Subsystem will align itself automatically, so only a Position Update is required.

(g) To perform a NAV Position Update, if entries are correct per unit SOP. If incorrect, this indicates that FDC DATA Transfer of the Map Mod was not successful in the previous step; press CANCEL, to return to the SETUP AND INFORMATION menu and repeat the FDC DATA XFER procedure to get initialized by FDC. If GRID ZONE, HEMISPHERE and SPHEROID entries are correct, then enter, in turn, EASTING, NORTHING, and ALTITUDE as follows: for each item, first box in the item, then press SELECT key. Use keypad to type in value. Press ENT key. Press USE ALL to complete the NAV UPDATE and return to the SETUP AND INFORMATION menu.

If invalid data is entered, the Navigational System will reject it and ask for data re-entry. Press ACK key to acknowledge Alert and re-enter data.

# N-6 AFCS INITIALIZATION - CONTINUED

## N-6.2 Initializing - Continued

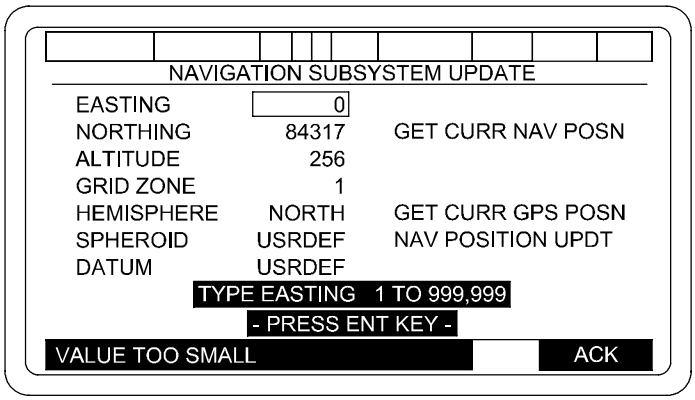


06pc324ta

(5) AMMO INVENTORY - Ammunition inventory must be done before the AFCS will accept a fire mission. Inventories must be complete and accurate before the system initialization is completed. The three parts of the inventory records, Shells, Propellants, and Fuzes, are updated as follows:

(a) Box in AMMO INVENTORY from the SETUP AND INFORMATION menu. Then press SELECT key. This will cause an INVENTORY MANAGEMENT menu to be displayed. Box in either EDIT CURRENT PALADIN or EDIT FDC PROVIDED data. Press SELECT key. This will cause an INVENTORY MANAGEMENT menu to be displayed.

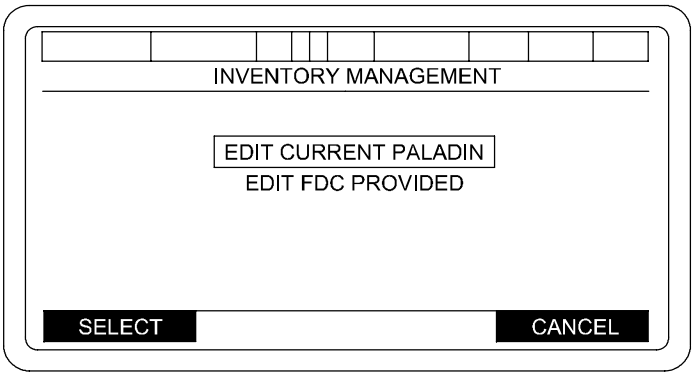


06pc654ma

**NOTE**

- This menu will not be displayed when FDC provided inventory data is not available at the AFCS.
- You can request the POC to provide your Ammo Inventory from the FDC if you know it is a correct count. Use FDC DATA XFER to GET AMMO STATUS (para N-6.2.l(2)).

# N-6 AFCS INITIALIZATION - CONTINUED

## N-6.2 Initializing - Continued

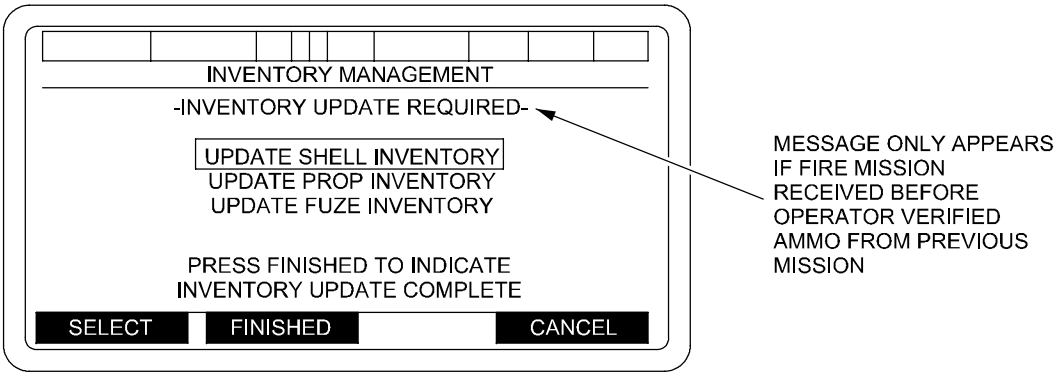


06pc118mb

### NOTE

If a Fire Mission is activated while in the UPDATE FUZE INVENTORY submenus, all valid complete entries with consistent fuze country code matches will be saved. The Paladin will save complete projectile/propellant entries when the FINISHED softkey is pressed.

FINISHED = When the FINISHED key is pressed the ammunition inventory shall be reviewed to insure each group of projectiles has at least one propellant and each group of propellants has at least one projectile. If a projectile is found without a propellant or a propellant without a projectile, the AFCS will display PROJECTILE/PROPELLANT MISMATCH menu.

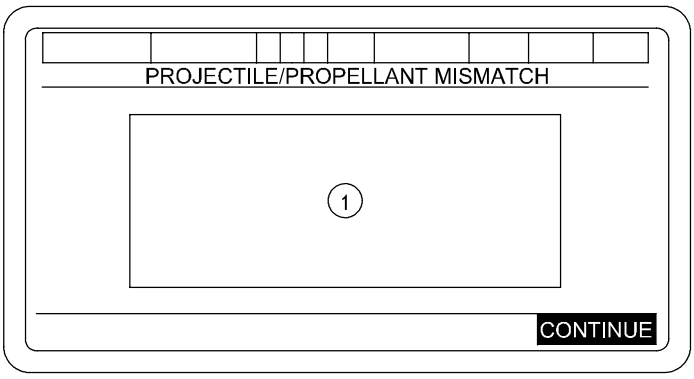


06pc189ta

CONTINUE = Will display INVENTORY MANANGEMENT menu.

(1) = NO ** PROJECTILE and or NO ** PROPELLANT MATCH for each country.
** = BE, CA, DA, FR, GE, IT, NL, NO, PO, SP, US or UK

### NOTE

Use Up and DOWN keys to scroll.

(b) Box in UPDATE SHELL INVENTORY. Press SELECT key. This will cause an UPDATE SHELL INVENTORY menu to be displayed.

# N-6 AFCS INITIALIZATION - CONTINUED

## N-6.2 Initializing - Continued

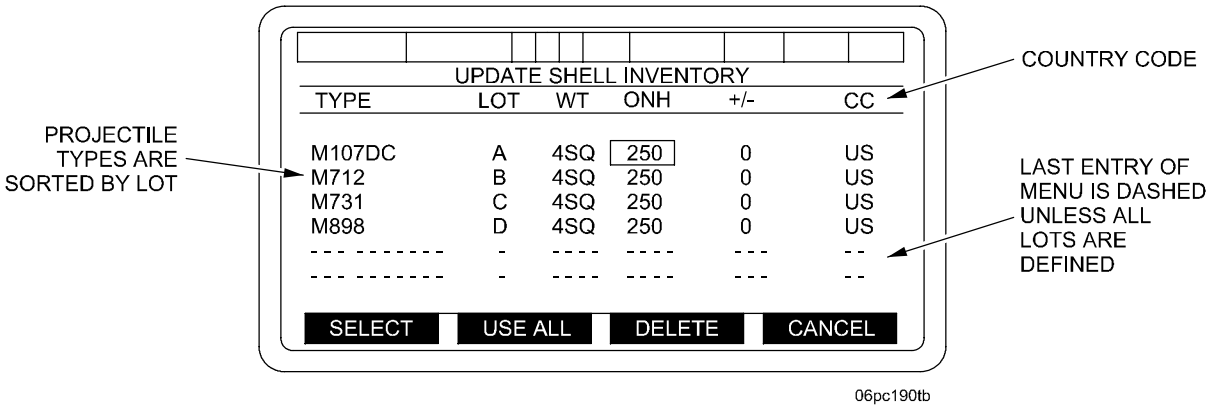


### NOTE

- When USE ALL key is selected to update inventory, it will automatically forward to the INVENTORY MANAGEMENT screen.
- Pressing the DELETE key will cause the selected shell to be deleted from inventory no matter where on the inventory line the selection box is positioned.
- If the operator presses the DELETE key or attempts to modify the lot for a shell that is currently being used for a fire mission, the AFCS operator warning “UNALLOWED - BEING USED BY FM” “ACK” will be displayed.

  (c) To add a new entry, box in the first blank line. Press SELECT key. This will cause an UPDATE SHELL INVENTORY-SELECT SHELL TYPE menu to be displayed.

### NOTE

When more than one page is required to display choices, MORE BELOW and/or MORE ABOVE may be used to navigate between screens.

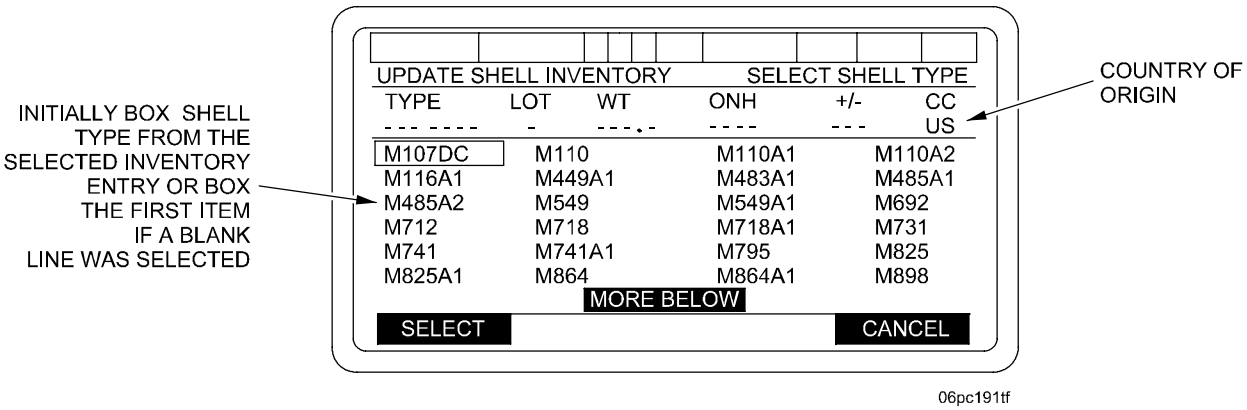

# N-6 AFCS INITIALIZATION - CONTINUED

## N-6.2 Initializing - Continued

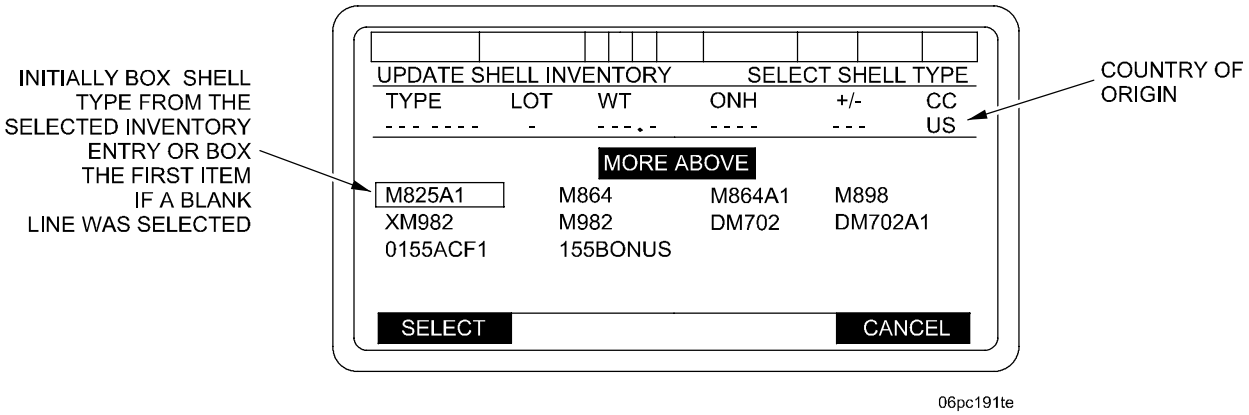


(d) Press SELECT key to display a SELECT LOT menu.

(e) Box in Lot choice and press SELECT key. This will cause a lot designator to be assigned to the selected shell. Once a lot selection is made, that designator (letter) will disappear. This prevents using same lot twice.

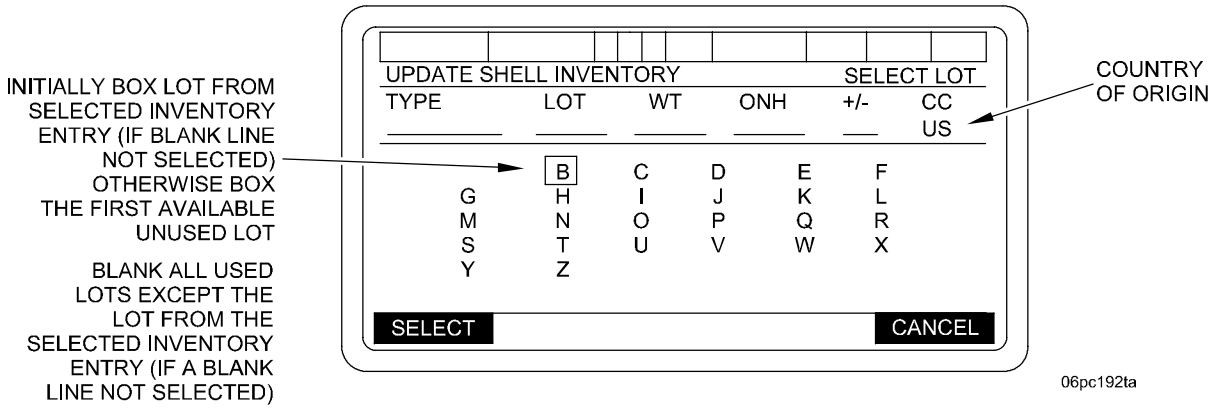


**NOTE**

Weight will be displayed in pounds or squares.

(f) Box in WT choice and press SELECT key; an ENTER SHELL WEIGHT menu will be displayed. If shell weight is not the same as default weight, type in new weight and press ENT key. This will cause the UPDATE SHELL INVENTORY-UPDATE QUANTITY menu to be displayed.

# N-6 AFCS INITIALIZATION - CONTINUED

## N-6.2 Initializing - Continued

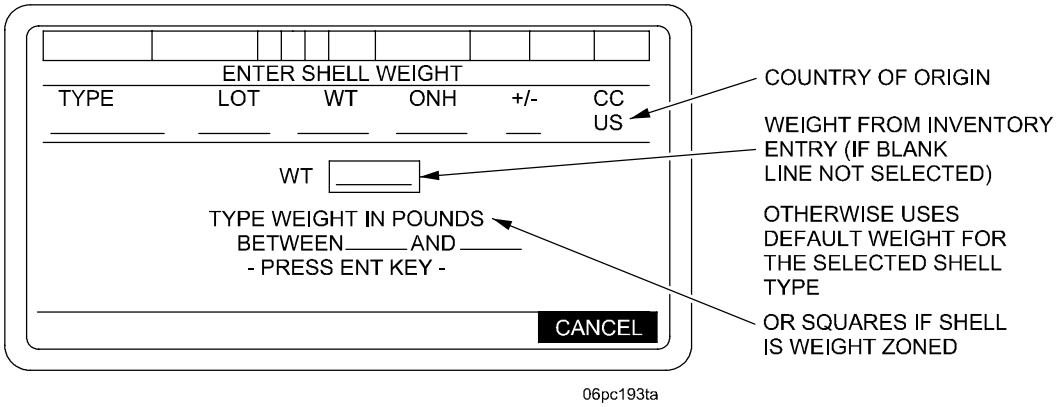


06pc193ta

(g) Move box to proper column (ONH, ADD or SUB) in desired line and press SELECT key. A prompt to TYPE SHELL QUANTITY will be displayed. Type in new quantity and press ENT key. New quantity will be displayed.

(h) When all shell data has been updated or edited, press USE ALL key to return to INVENTORY MANAGEMENT menu.

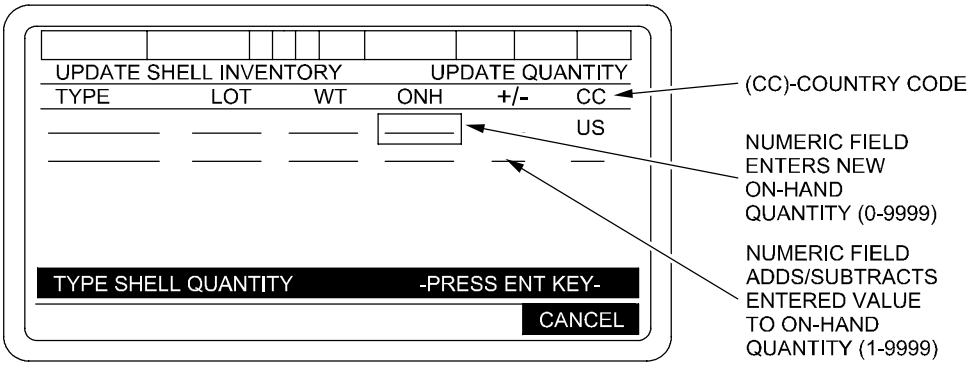


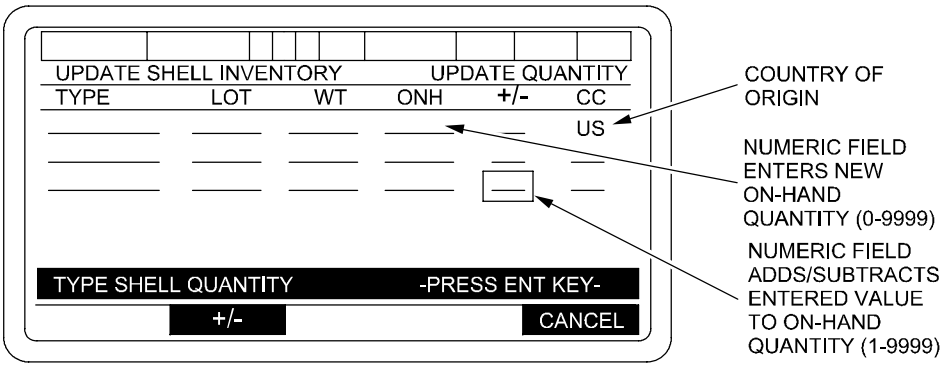


06pc194ta

# N-6 AFCS INITIALIZATION - CONTINUED

## N-6.2 Initializing - Continued

### NOTE

- The +/- softkey will appear when the +/- column is selected. If you select the ONH column, the +/- softkey will not appear.
- Minus values must not exceed the amount on-hand. Plus values must not cause the on-hand total to exceed 9999. Either of these conditions shall cause the error message: "VALUE TOO SMALL" "ACK" or "VALUE TOO BIG" "ACK".

(i) Box in UPDATE PROP INVENTORY on INVENTORY MANAGEMENT (UPDATE) menu. Press SELECT key to display UPDATE PROP INVENTORY menu.

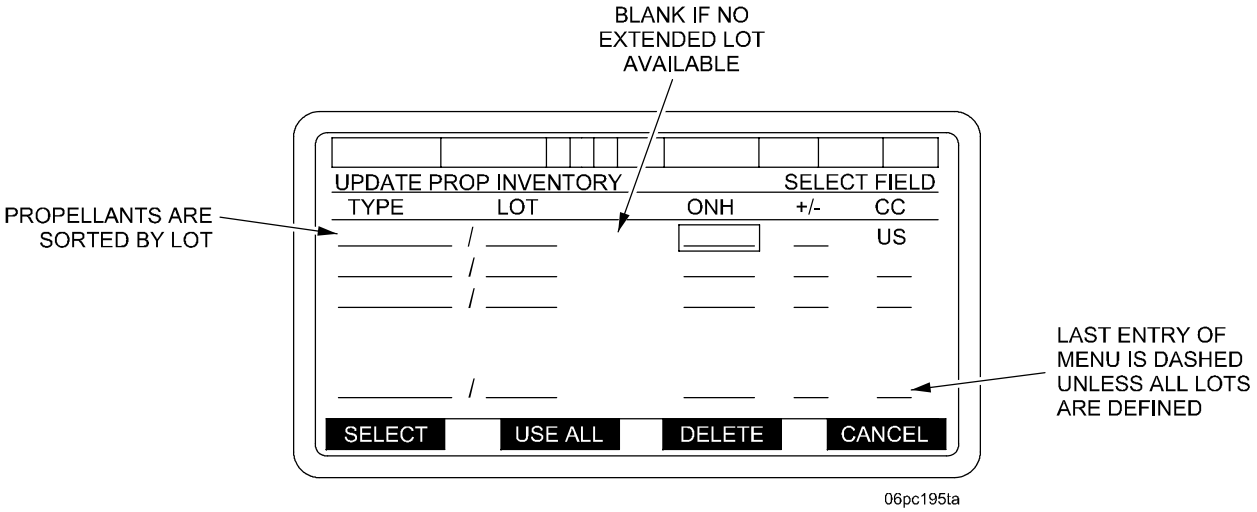


### NOTE

- The DELETE key shall cause the selected propellant to be deleted from inventory no matter where on the inventory line the selection box is positioned.
- If the operator presses the DELETE key or attempts to modify the lot for a propellant that is currently being used for a fire mission, the AFCS shall display the operator warning "UNALLOWED - BEING USED BY FM" "ACK".

# N-6 AFCS INITIALIZATION - CONTINUED

## N-6.2 Initializing - Continued

(j) To add a new entry, box in the first blank line on UPDATE PROP INVENTORY menu. Press SELECT key to display SELECT PROP TYPE menu. Box in propellant type and press SELECT key.

**NOTE**

The data displayed on the third line of this display is that given in the selected inventory entry (either a blank line or an existing entry) and is updated as entries are made.

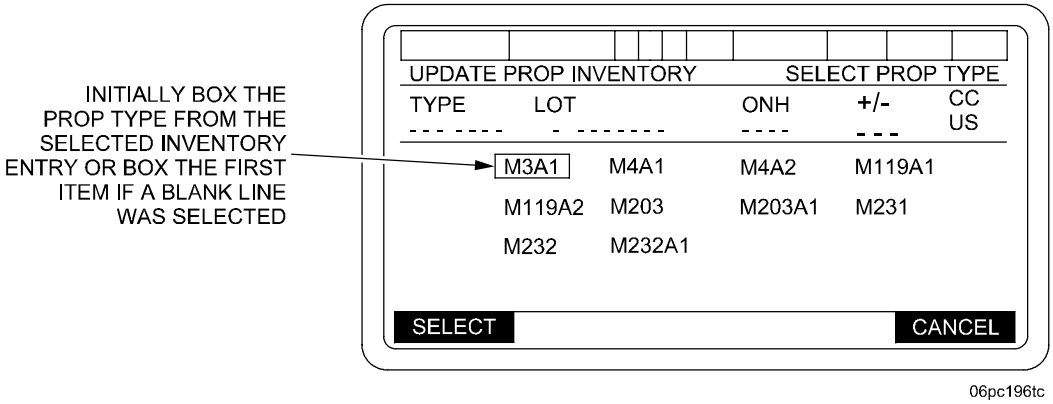

# N-6 AFCS INITIALIZATION - CONTINUED

## N-6.2 Initializing - Continued

(k) When the SELECT key on the SELECT PROP TYPE screen is pressed the UPDATE PROP INVENTORY-ENTER LOT menu will be displayed.

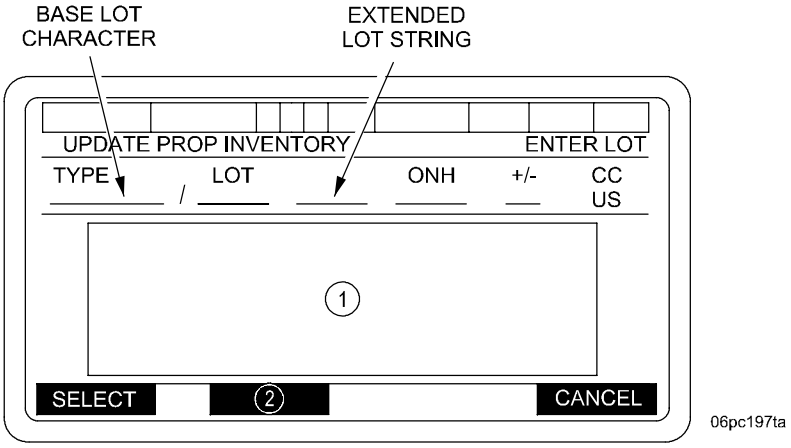


1 On initial entry to this display, the cursor box is on the base lot from the selected inventory entry (if a blank line was not selected). Otherwise, box the first available unused base lot letter. The base lot location in the upper display is highlighted in reverse video. All base lots currently in the propellant inventory are deleted from the selection area (except for the selected inventory entry base lot if not on a blank inventory line).

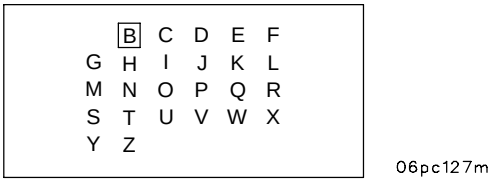


After the base lot is selected, the extended lot editing function is entered. All alphabetic characters as well as numeric, virgule, hyphen, and highlight movement characters are made available for operator selection. The operator will be allowed to enter blanks while editing the extended lot string, but they will be removed when the operator selects USE ALL. The reverse video highlight is initially moved to the first character position (left most character) in the extended lot string. Highlight movement will wrap at the ends of the extended lot string. Pressing the CANCEL key will erase the character under the reverse video highlight. If the CANCEL key is pressed while the USE ALL selection is not present, AFCS will clear the propellant type/model selected and display a blank UPDATE PROP INVENTORY-ENTER LOT screen.

2 Blank - until extended lot string editing begins.
USE ALL - while editing the extended lot string.

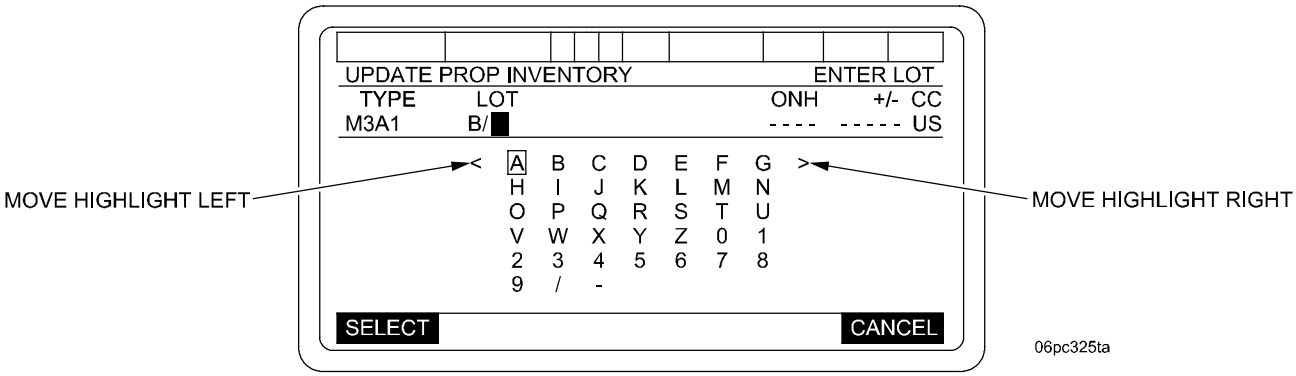

# N-6 AFCS INITIALIZATION - CONTINUED

## N-6.2 Initializing - Continued

When USE ALL key is pressed the following checks occur:

- The extended string is compared with other extended lot codes in inventory. If a duplicate extended lot string is found, a short error message will be displayed.

  DUPLICATE EXTENDED LOT FOUND | ACK

  When ACK is pressed, the extended lot editing function will be resumed and the highlight will be at the last character position prior to pressing USE ALL. Before pressing USE ALL, enter a different extended lot.

- The extended lot string is compared with other extended codes in the MVV Lot Database. If a duplicate extended lot string is found and there is a propellant model mismatch, the error message shall be generated.

  MVV EXTENDED LOT CONFLICT | ACK

  When ACK is pressed, the extended lot editing function shall be resumed and the highlight shall be at the last character position prior to pressing USE ALL.

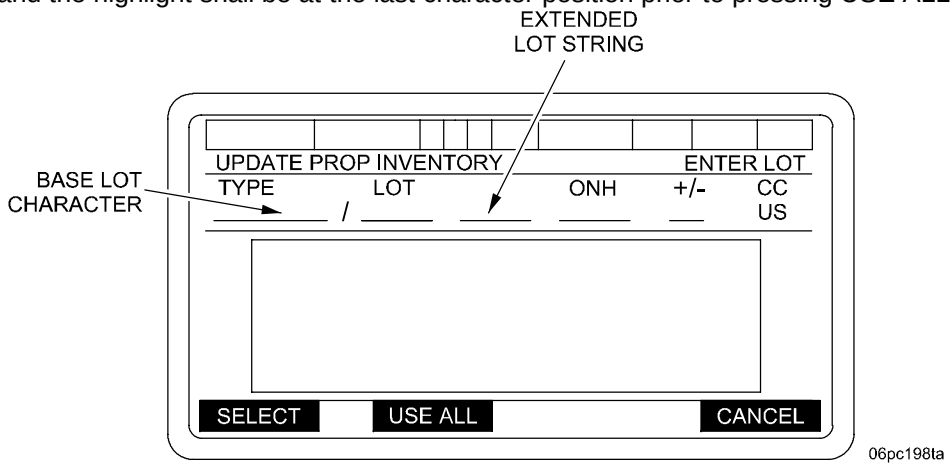


(l) When the USE ALL key is pressed, the UPDATE PROP INVENTORY-UPDATE QUANTITY menu is displayed. Box in either +/- column and press SELECT key. Type in new quantity and press ENTER key. New quantity will be displayed.

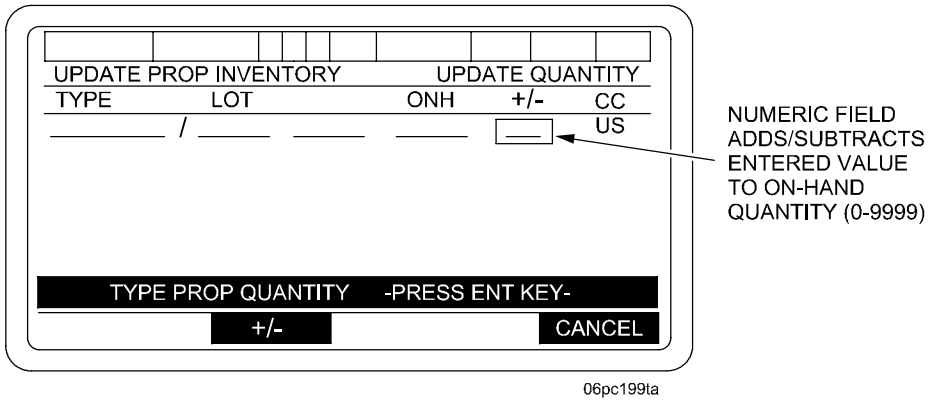

# N-6 AFCS INITIALIZATION - CONTINUED

## N-6.2 Initializing - Continued

### NOTE

- The +/- softkey will appear when the +/- column is selected. If you select the ONH column, the +/- softkey will not appear.
- Minus values must not exceed the amount on-hand. Plus values must not cause the on-hand total to exceed 9999. Either of these conditions shall cause the error message: "VALUE TOO SMALL" "ACK" or "VALUE TOO BIG" "ACK".

(m) When propellant types have been updated or edited, press USE ALL key. This will cause the INVENTORY MANAGEMENT menu to be displayed.

(n) Box in UPDATE FUZE INVENTORY on INVENTORY MANAGEMENT menu. Press SELECT key to display UPDATE FUZE INVENTORY - SELECT FIELD menu. To add a new entry, move box to the first blank line. Press SELECT key. A SELECT FUZE TYPE menu will be displayed.

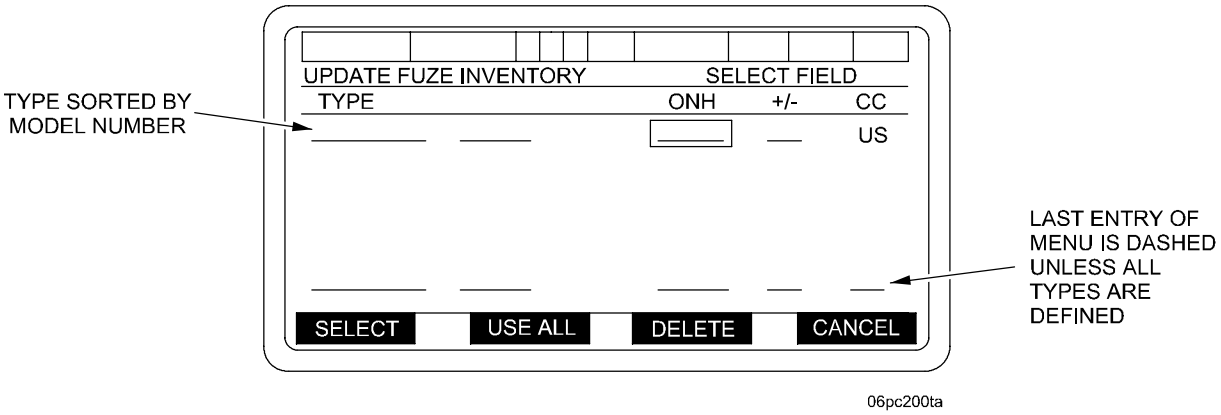


### NOTE

- The DELETE key will cause the selected fuze to be deleted from inventory no matter where on the inventory line the selection box is positioned.
- If the operator presses the DELETE softkey or attempts to modify the fuze model that is currently being used for a fire mission, the AFCS shall display the operator warning "UNALLOWED - BEING USED BY FM" "ACK".

(o) Box in FUZE TYPE and press SELECT key.

### NOTE

The data displayed on the third line of this display is that given in the selected inventory entry (either a blank line or an existing entry) and is updated as entries are made.

# N-6 AFCS INITIALIZATION - CONTINUED

## N-6.2 Initializing - Continued

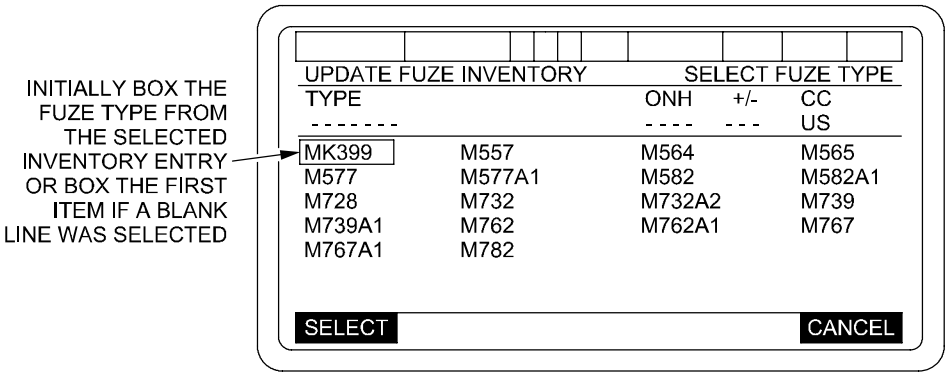


06pc326ta

(p) Box in COUNTRY OF ORIGIN code and press SELECT key. Display will transition to UPDATE FUZE INVENTORY-SELECT FUZE TYPE for the selected country. Pressing the CANCEL key will return display to the UPDATE FUZE INVENTORY-SELECT FUZE TYPE screen.

# N-6 AFCS INITIALIZATION - CONTINUED

## N-6.2 Initializing - Continued

### NOTE

- The +/- softkey will appear when the +/- column is selected. If you select the ONH column, the +/- softkey will not appear.
- Minus values must not exceed the amount on-hand. Plus values must not cause the on-hand total to exceed 9999. Either of these conditions shall cause the error message: "VALUE TOO SMALL" "ACK" or "VALUE TOO BIG" "ACK".

(q) Move box to proper column (ONH or +/-). Press SELECT key.

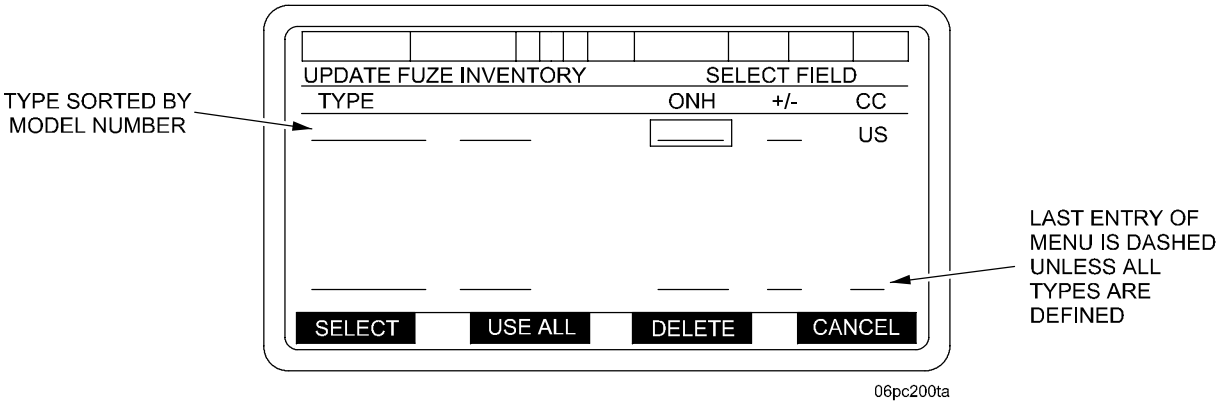


(r) Type in quantity and press ENT key.

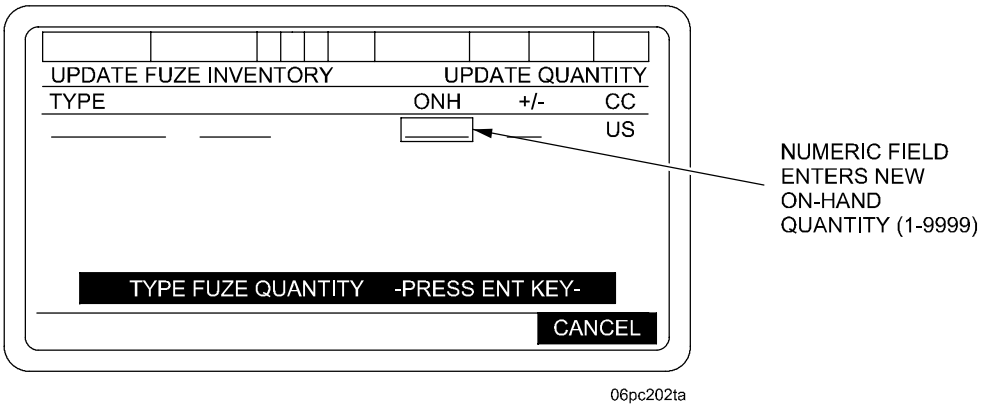


(s) When fuzes have been updated, press USE ALL key to return to INVENTORY MANAGEMENT menu.

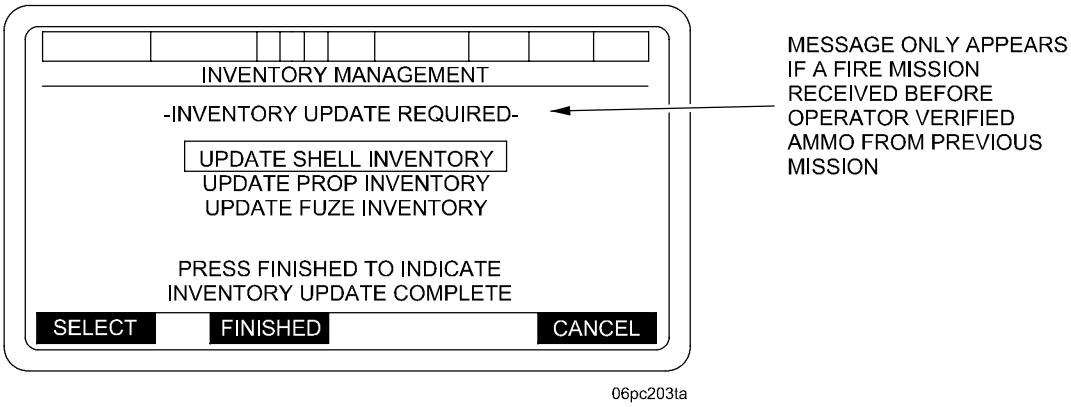

# N-6 AFCS INITIALIZATION - CONTINUED

## N-6.2 Initializing - Continued

**NOTE**

- If a fire mission is activated while in any of the ammunition inventory sub-menus, all valid complete entries with consistent projectile/ propellant, country code matches shall be saved.
- If the CANCEL softkey is selected all edits will be ignored.
- When the FINISHED softkey is pressed the ammunition inventory shall be reviewed to insure each group of projectiles has at least one propellant and each group of propellants has at least one projectile. If a projectile group is found without a propellant or a propellant without a projectile, the AFCS will display PROJECTILE/PROPELLANT MISMATCH menu. Pressing the CONTINUE softkey on this menu will return operator to the INVENTORY MANAGEMENT menu, at which time the operator has to update SHELL/PROP inventory.

(t) When all ammunition data has been entered or updated, press FINISHED key to display the SETUP AND INFORMATION menu.

(6) PROPELLANT TEMPERATURE - Must be entered in order to complete initialization. After ammunition has been received, a propellant temperature should be obtained by the crew using a calibrated propellant temperature gage. Propellant temperatures are entered as follows:

**NOTE**

- Accurate propellant temperatures must be entered in order for AFCS to accurately compute muzzle velocity variances (MVVs).
- Numerical value must be entered before sign. Default sign is (+).

(a) Box in PROP TEMP from SETUP AND INFORMATION menu. Press SELECT key. A PROPELLANT TEMPERATURE menu will be displayed. Type in correct temperature and press ENT key.

# N-6 AFCS INITIALIZATION - CONTINUED

## N-6.2 Initializing - Continued

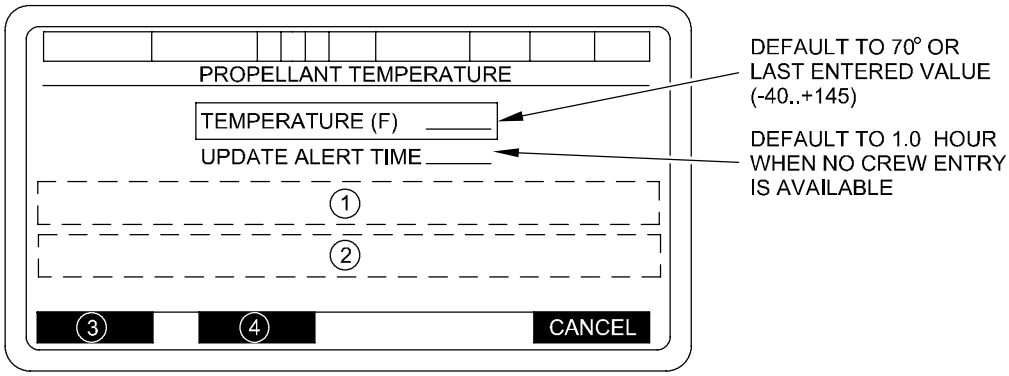


06pc204ta

(1) TIME TO GO XX:XX (HOURS:MINUTES) OR TIME EXCEEDED
TIME EXCEEDED will be displayed upon initial entry to this screen.

(2) WHEN TEMPERATURE SELECTED
TYPE TEMPERATURE IN FAHRENHEIT DEGREES: -40 TO +145
- PRESS ENT KEY -
WHEN UPDATE ALERT TIME SELECTED
TYPE UPDATE TIME IN 0.5 HOUR INCREMENTS: 0.5 TO 2.0
- PRESS ENT KEY -

(3) BLANK - When TEMPERATURE or UPDATE ALERT TIME selected
SELECT - When item is not selected

(4) USE ALL - When no item is selected
+/- When temperature is selected
BLANK - When UPDATE ALERT TIME is selected

(b) If a temperature outside allowable range is input, operator alert “VALUE TOO BIG” or “VALUE TOO SMALL” will appear when ENT key is pressed. The ACK key must be pressed to return to the PROPELLANT TEMPERATURE menu to enter correct temperature.

(c) A propellant temperature is input during initialization by selecting PROP TEMP from the SETUP AND INFORMATION menu to display the PROPELLANT TEMPERATURE menu. The operator is allowed to enter the propellant temperature. If no temperature is entered the AFCS will use the default value of 70 degrees F. To enter the propellant temperature, place cursor to TEMPERATURE (F), press the SELECT softkey. An operator prompt “TYPE TEMPERATURE IN FAHRENHEIT DEGREES -40 TO +145 --PRESS ENTER KEY” will appear. Type in propellant temperature and press ENT key. In addition, the AFCS incorporates a timed audible and visual alert to the operator to warn that a propellant temperature update is required. The time interval to use for the audible and visual alerts are selectable on the PROP TEMP menu, from 30 minutes (0.5 hours) to 120 minutes (2.0 hours) in 30 minute increments. The alert time is defaulted to 1.0 hour when no time is entered by the operator. To set alert time, place cursor on UPDATE ALERT TIME, and press SELECT softkey. An operator prompt, “TYPE UPDATE TIME IN 0.5 HOUR INCREMENTS 0.5 TO 2.0, PRESS ENTER KEY” will appear. When the operator has successfully entered the propellant temperature and alert time return to SETUP AND INFORMATION menu by pressing USE ALL softkey. When correct propellant temperature and alert time have been entered, pressing USE ALL will display the SETUP AND INFORMATION menu.

# N-6 AFCS INITIALIZATION - CONTINUED

## N-6.2 Initializing - Continued

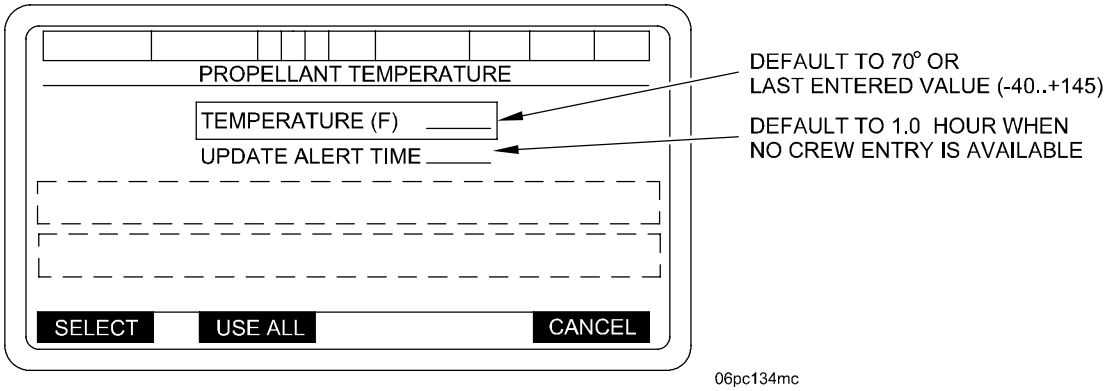


### NOTE

- "Changed" means the item was "Selected" and "Entered".
- "TEMPERATURE (F) update" updates the Powder Temperature and an internal DTG identifying when the TEMPERATURE (F) was last updated.
- "TIME TO GO" calculation = TEMPERATURE (F) update DTG − Current DTG. If the TIME TO GO is less than zero seconds, TIME TO GO equals TIME EXCEEDED.

(d) If only the UPDATE ALERT TIME is changed and the USE ALL key is pressed, the TEMPERATURE (F) will not be updated unless it had not been initialized during this particular power-up in which case it will be updated, UPDATE ALERT TIME will be updated, TIME TO GO will be recalculated and AFCS will return to the SETUP AND INFORMATION display.

(e) If only TEMPERATURE (F) is changed and USE ALL is pressed, TEMPERATURE (F) will be updated but UPDATE ALERT TIME will not. TIME TO GO will be recalculated and AFCS will return to the SETUP AND INFORMATION display.

(f) If neither UPDATE ALERT TIME or TEMPERATURE (F) is changed and USE ALL is pressed, TEMPERATURE (F) will be updated, UPDATE ALERT TIME will not be updated and TIME TO GO will be recalculated and AFCS will return to the SETUP AND INFORMATION display.

(g) If both UPDATE ALERT TIME and TEMPERATURE (F) are changed and USE ALL is pressed, both fields will be updated and TIME TO GO will be recalculated and AFCS will return to the SETUP AND INFORMATION display.

# N-6 AFCS INITIALIZATION - CONTINUED

## N-6.2 Initializing - Continued

**NOTE**

Do not enter a time value smaller than 0.5 minutes or larger than 10.0 minutes. Either of these conditions will cause the error message: "VALUE TOO SMALL" "ACK" or "VALUE TOO BIG" "ACK".

(7) TOT RESPONSE TIME - This is used to set crew time response for a specific fire mission. The data tells the AFCS how much advance warning a crew needs before a Time on Target (TOT) mission is to be fired. This data is entered as follows:

(a) Box in TOT RESPONSE from SETUP AND INFORMATION menu. Press SELECT key to display a TIME ON TARGET CREW RESPONSE TIME menu.

(b) Enter data for response time and press the ENT key. This will return the display to the SETUP AND INFORMATION menu.

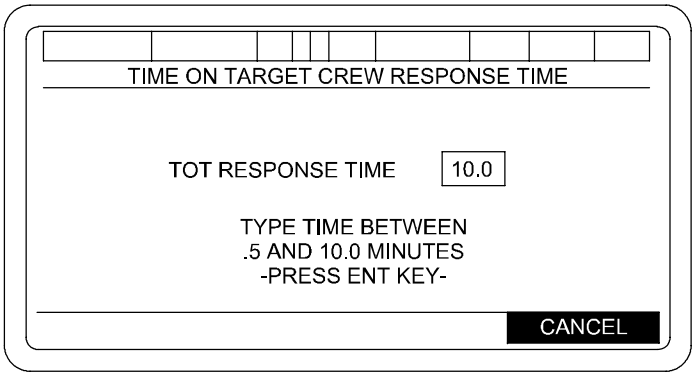


06pc136ma

# N-6 AFCS INITIALIZATION - CONTINUED

## N-6.2 Initializing - Continued

(8) LOAD ELEVATION - This data is entered in the AFCS to specify an elevation that the gun tube will automatically return to after firing when the LOAD key is pressed on the DU panel. Enter LOAD ELEVATION as follows:

(a) Box in LOAD ELEVATION from the SETUP AND INFORMATION menu. Press SELECT key to display a TUBE LOAD ELEVATION menu.

**CAUTION**

Do not enter an elevation greater than 300 mils. Settings above 300 mils may result in breech failing to close and could cause unnecessary wear on spring pack.

**NOTE**

Numerical value must be entered before sign. Default sign is (+).

(b) Type in desired elevation data and press ENT key. The SETUP AND INFORMATION menu will be displayed.

**NOTE**

- If a value larger than 1333 is entered, Paladin will display the operator alert “VALUE TOO BIG” “ACK”.
- If a value smaller than −200 is entered, Paladin will display the operator alert “VALUE TOO SMALL” “ACK”.

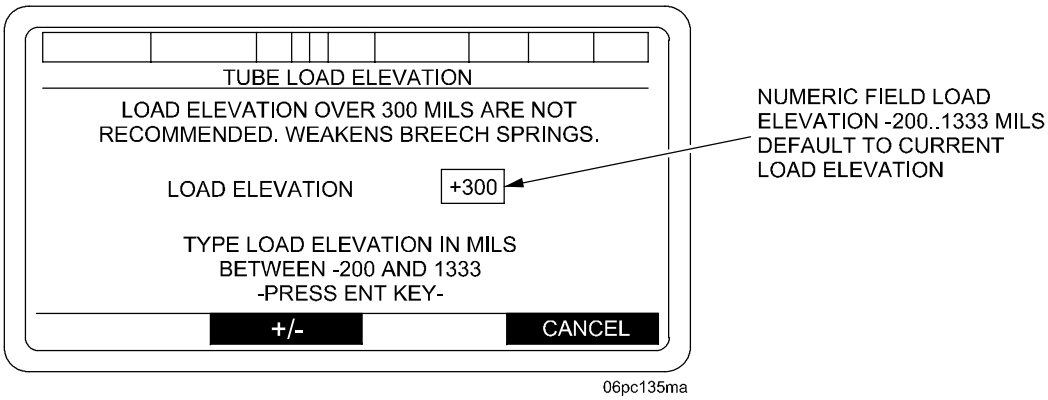

# N-6 AFCS INITIALIZATION - CONTINUED

## N-6.2 Initializing - Continued

(9) SECTOR OF FIRE - Used to define the howitzer's sector of fire. Data is entered as follows:

(a) Box in SECTOR OF FIRE from SETUP AND INFORMATION menu. Press SELECT key to display DEFINE SECTOR OF FIRE menu.

(b) Box in LEFT LIMIT OF SECTOR. Press SELECT key. Enter data. Press ENT key. Move box to AOF. Press SELECT key. Enter data. Press ENT key. Move box to RIGHT LIMIT OF SECTOR. Press SELECT key. Enter data. Press ENT key.

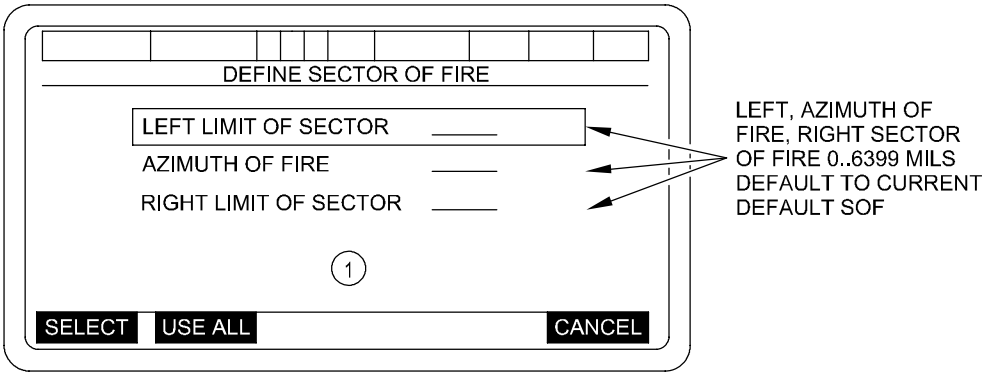


06pc205td

IF LEFT = RIGHT

ERROR - LEFT AND RIGHT EQUAL | ACK

If AZIMUTH OF FIRE is not to RIGHT OF LEFT LIMIT and LEFT OF RIGHT LIMIT.

AZIMUTH OF FIRE NOT IN SECTOR | ACK

(1) BLANK: No selection made

Selection made:

"TYPE AZIMUTH BETWEEN 0 AND 6399 MILS"
"PRESS ENT KEY"

# N-6 AFCS INITIALIZATION - CONTINUED

## N-6.2 Initializing - Continued

### NOTE

- Operator entered Sector of Fire data will be used by the AFCS during Move Orders to help orient the vehicle during emplacement at a Firing Point/Firing Area.
- During Emplacement after a Move Order, this AOF will be “Base Azimuth” for 3200 Deflection.
- SECTOR OF FIRE entered by the operator will be used to calculate ballistic. If FDC has not sent SECTOR OF FIRE for prescribed location (FIRING AREA/POINT).

(c) When all correct data has been entered, press USE ALL key to enter data. The following message will be displayed: “ARE YOU SURE” “YES” “NO”. If YES is selected, the sector of fire will be updated and the display will return to SETUP AND INFORMATION menu. If NO is selected, the message will be removed for re-entry of data. Operator entered Sector of Fire data will update the Site Data display.

(d) When all initialization data (Asterisk items from SETUP AND INFORMATION menu) has been entered, and the navigation subsystem alert “OK TO MOVE OR SHOOT” “ACK” has been displayed and the ACK key pressed, then press CANCEL key on SETUP AND INFORMATION menu to bring up a SECTION IN ORDER AT INITIALIZATION POINT display.

(10) SECTION IN ORDER Display - Displays the format and content for an initialization or logistics point.

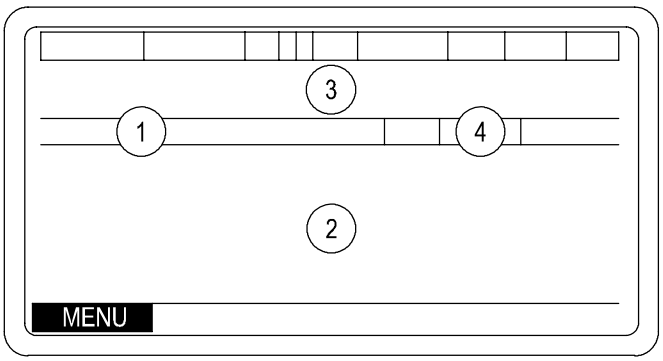


06pc138ma

1 “FPF/PRI EXISTS” - FPF/PRI target exists in stored target table
“NO FPF/PRI EXISTS” - No FPF/PRI or priority target exists in stored target table

2 “SECTION IN ORDER AT LOGISTICS POINT” - Arrival location is logistics point
“SECTION IN ORDER AT INITIALIZATION POINT” - Arrival location is initialization point

3 DO NOT MOVE - No FPF/PRI target exists
DO NOT MOVE / DO NOT LOAD - FPF/PRI target exists

4 Tube temperature status

## N-6 AFCS INITIALIZATION - CONTINUED

### N-6.3 Initialization After an Orderly Shutdown.

**WARNING**

**ALKALINE BATTERIES**

Caustic potassium hydroxide gas may be released from leaking or ruptured batteries. Avoid eye or skin contact and inhalation of vapors. Increase ventilation. Wear safety glasses and rubber gloves when handling leaking batteries. Dispose in accordance with local regulation. Refer to TB 43-0134, Batteries, Disposition and Disposal for additional information.

**NOTE**

M93 MVS must be installed and connected prior to turning the vehicle MASTER power switch ON.

During AFCS operation, it may become necessary to power down and then back up; (example, a system lockup occurs).

**NOTE**

After AFCS has been powered down, the AFCS will power up and be operational in approximately 3-4 minutes.

Power down in this form causes an orderly shutdown, and some of the AFCS data is saved. An orderly shutdown also occurs when the power is turned off after normal operations. Some of the data saved on orderly shutdown is Network Setup, Ammo Inventory, Navigation Data (location where system was powered down), TOT Response, Load Elevation, and the last operator-entered Sector of Fire. When the system is turned back on from an orderly shutdown, step-by-step initialization is not necessary, although action on all asterisk marked items on the SETUP AND INFORMATION menu must be accomplished. The process for initialization after an orderly shutdown is as follows:

a. System Power Up. Set MASTER switch and Power Conditioner Unit circuit breakers to ON.

With the PLGR/DAGR in the PLGR/DAGR mount and all external cables attached, press the ON/BRT key on the PLGR key pad or press the PWR/QUIT key on the DAGR keypad. The PLGR/DAGR should power up automatically and perform its self-test (BIT). Operate the PLGR in accordance with the PLGR TM 11-5825-291-13 or operate the DAGR in accordance with the DAGR TM 11-5820-1172-13.

If the PLGR does not have a current key (i.e. the PLGR/DAGR was previously zeroized, newly installed or the key has expired), then load a valid key in accordance with the PLGR TM 11-5825-291-13 or in accordance with the DAGR TM 11-5820-1172-13.

# N-6 AFCS INITIALIZATION - CONTINUED

## N-6.3 Initialization After an Orderly Shutdown - Continued

**NOTE**

To load a key, the DRUH must be off, or the P4 DRUH-PLGR/DAGR signal connector must be disconnected to cause a PLGR/DAGR COM FAIL. Re-attachment of P4 DRUH-PLGR/DAGR signal connector after PLGR/DAGR keying will automatically cause DRUH-PLGR/DAGR communications to resume if DRUH is on.

If the PLGR/DAGR antenna has a clear view of the sky, turn PLGR/DAGR on. If the antenna's view of the sky is blocked (e.g. the vehicle is in a building, under tree cover or parked next to a large structure), move vehicle until the PLGR/DAGR is clear.

If the vehicle cannot be moved, keep PLGR/DAGR turned off until the vehicle can be moved to a location with a clear view of the sky.

**NOTE**

- If the PLGR/DAGR is off, the Navigation Subsystem will still accept initialization data from the AFCS for inertial operation and the Navigation System will operate as before.
- Guidelines for conditions and times for the PLGR/DAGR to obtain position data acceptable by the AFCS.

(1) If the antenna has a clear view of the sky and PLGR/DAGR has a valid position, current GPS time, current GUV key, and has stored a current satellite almanac, PLGR/DAGR will be acceptable for use in about three minutes following the first turn-on of the day. It will take about 90 seconds for subsequent turn-ons. These are the normal operating conditions.

(2) If the antenna has a clear view of the sky and PLGR/DAGR has a current GUV key but the PLGR/DAGR doesn't have a valid position, current GPS time, or current satellite almanac, it may take up to 20 minutes after turn-on for the PLGR/DAGR to output data of acceptable accuracy.

(3) If the PLGR/DAGR has a valid position, current GPS time, current key, and current satellite almanac, but the antenna is masked from a clear view of the sky when PLGR/DAGR is turned on, it may take up to 20 minutes to get acceptable data after the vehicle is moved to a location with a clear view of the sky. This results from the PLGR/DAGR initiating a search for all possible satellites if it can't lock on to those expected, for its current position, time, and almanac, within a reasonable time interval.

(4) If the PLGR/DAGR doesn't have a current key, its data won't be acceptable for use by the AFCS. However, assuming a clear view of the sky, it can be turned on to initialize position, time, and satellite almanac in about 20 minutes. Then when a valid key is loaded, the PLGR/DAGR will be ready to go within three minutes.

**NOTE**

M93 MVS must be installed and connected prior to turning the vehicle MASTER power switch on.

Make sure TRAINING switch on DU is OFF. Set POWER switch on DU to ON. When power is first applied to the AFCS, the display will be blank and the AFCS will automatically perform its internal self-test (BIT). Next a screen will be displayed with this message "AFCS OPERATING SYSTEM BOOT UP...PLEASE WAIT...", followed by an "INITIALIZATION IN PROGRESS..". screen.

# N-6 AFCS INITIALIZATION - CONTINUED

## N-6.3 Initialization After an Orderly Shutdown - Continued

### NOTE

- The time lapse between first three screens can range from 3 to 5 minutes.
- If screen stays blank for more than 7 minutes, power down system.

A “SYSTEM VERIFICATION FAILURE” message will be displayed only if a failure is detected.

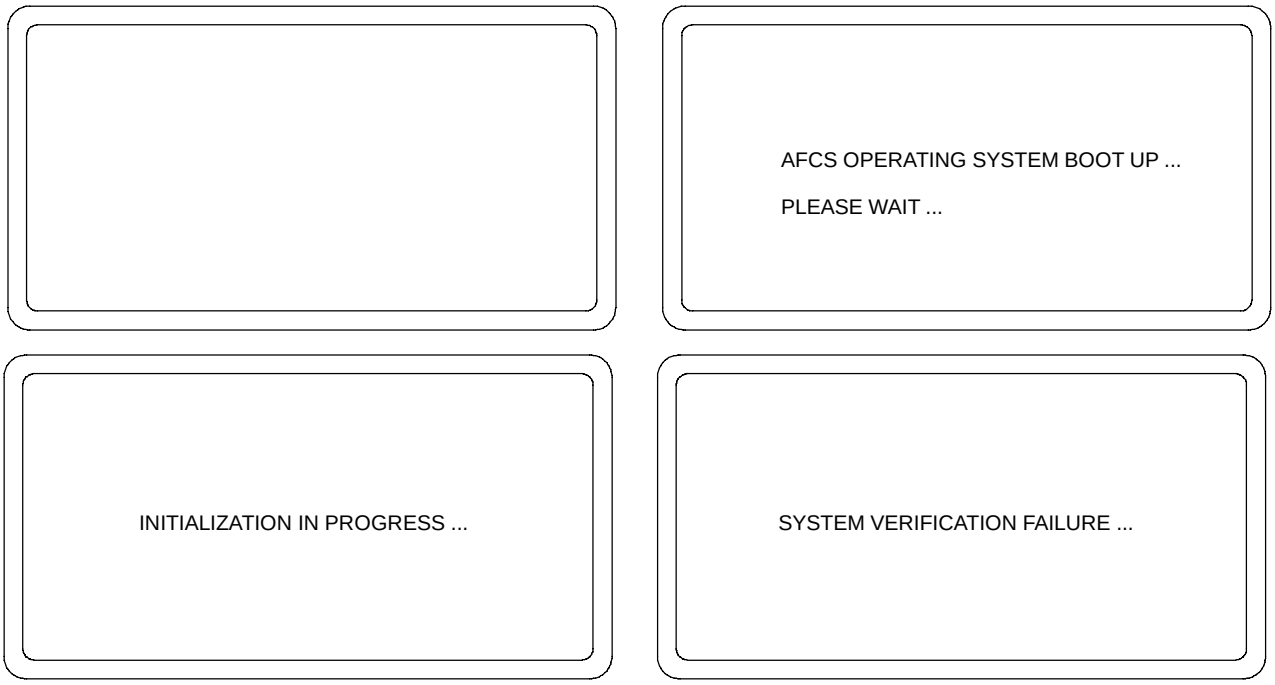


06pc414ma

After the AFCS powers up, the PLGR/DAGR screen should read:

REMOTE CONTROL
Only ZEROIZE key
activated

At this point the PLGR/DAGR key pad will become inactive. The only PLGR/DAGR operation allowed using the key pad is EMERGENCY ZEROIZE.

If this message is not displayed on the PLGR/DAGR screen, and the Low Priority Message “GPS OUT - GPS DISCONNECTED” is not displayed on the DU, ensure that the DRUH-PLGR Signal Connector (P4) plug on the W17A cable is connected and secure. Once this PLGR/DAGR screen is displayed, proceed with system initialization.

### NOTE

- NAV SUBSYSTEM includes: VMS, DRUH, VMS modems
- PCU SUBSYSTEM includes: PCU and both back-up batteries
- The switches on the PCU are circuit breakers. They should be left ON at all times, so they will not wear out from being turned off and on constantly.

# N-6 AFCS INITIALIZATION - CONTINUED

## N-6.3 Initialization After an Orderly Shutdown - Continued

(5) This screen displays the subsystems that are checked by BIT. As the subsystems are checked, the dashed lines will change to a subsystem status (OK, DEGRADED, OUT, - -). The - - appears on the MVS status line when the AFCS could not be connected to the MVS. This screen also identifies the system software version.

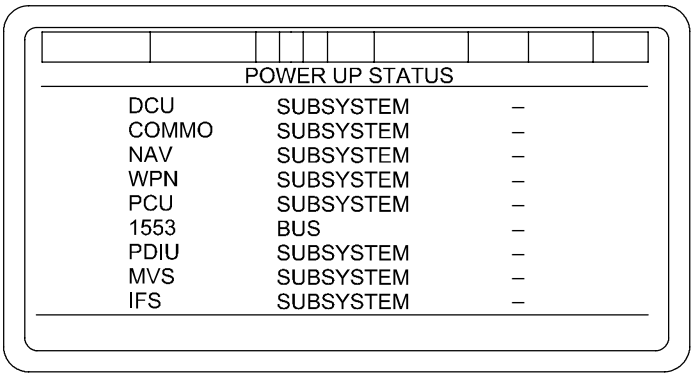


06pc271tb

In the event of a failure during POWER UP STATUS, the message, "DEGRADED-ACK TO CONTINUE", will be displayed on the bottom line of the EL Panel. To continue, depress softkey under ACK. After the self-test is complete, SELECT OPERATIONAL MODE menu is displayed.

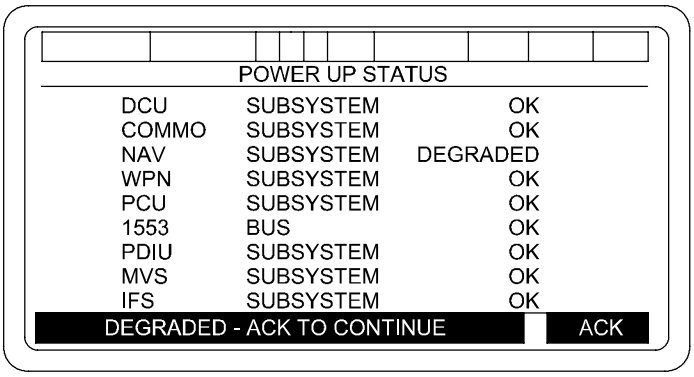


06pc244td

### NOTE

If DCU contains an incorrect configuration, the AFCS will not allow the operator to select normal operations until a correct DCU software configuration is downloaded.

# N-6 AFCS INITIALIZATION - CONTINUED

## N-6.3 Initialization After an Orderly Shutdown - Continued

When configuration verification checking indicates that an invalid howitzer software configuration is present, a short error message “INVALID SOFTWARE CONFIGURATION” “ACK” will appear on the softkey label line of the DU.

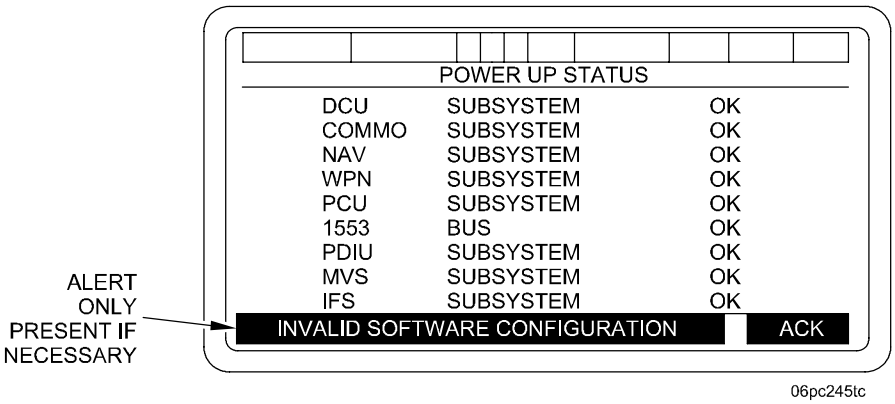


06pc245tc

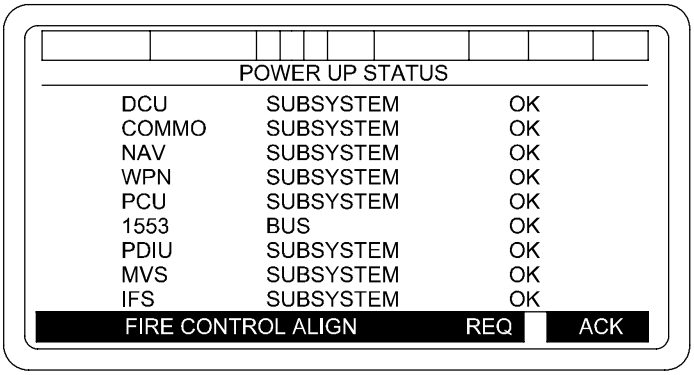


06pc246tb

When the message is acknowledged, the AFCS will proceed to the SELECT OPERATIONAL MODE menu. To view detailed software configuration information for each LRU, MAINTENANCE should be selected, IAW procedure in para N-9.1.

(6) Operational Mode Selection Menu.

This menu allows selection of the primary operating mode for the AFCS.

The selection structure shows the prompting for Embedded Training selection. Note that the TRAINING selection and the associated prompting will not be available if the Embedded Training Controller fails power-up BIT.

# N-6 AFCS INITIALIZATION - CONTINUED

## N-6.3 Initialization After an Orderly Shutdown - Continued

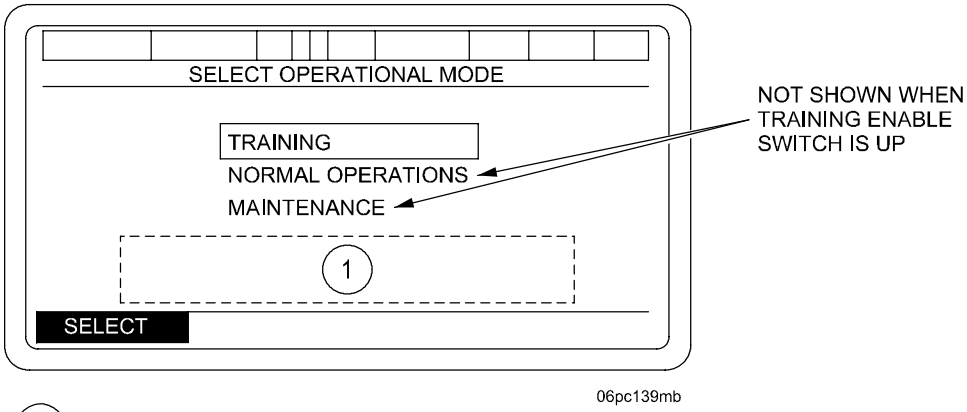


1

- WHEN TRAINING SWITCH IS UP:

POSITION TRAINING ENABLE SWITCH DOWN TO SELECT OTHER MODES

- WHEN TRAINING SWITCH IS DOWN:

POSITION TRAINING ENABLE SWITCH UP TO SELECT TRAINING MODE

b. Initialization.

**NOTE**

After an orderly shutdown, follow the procedures below. However, if a catastrophic failure happens within the system, go to para N-6.4.

Select NORMAL OPERATIONS on the SELECT OPERATIONAL MODE menu and press SELECT softkey. A NETWORK menu will be displayed.

(1) NETWORK - Check data on the NETWORK menu for correctness against current data from POC/FDC and press FINISHED.

Using the NET ACCESS menu, check that data in the displayed menu shows same data that the unit SOP specifies.

**NOTE**

To ensure efficient set up of the digital net, it is very important that NETWORK data be assigned and controlled by POC/FDC. Verify data per local SOP.

(a) Only one network configuration will be active at any one time. The active configuration is identified by the label “*ACTIVE*” in the STATUS column.

(b) Inactive configurations do not have anything displayed in the STATUS column.

(c) TACFIRE configurations will not display anything in the COMSEC and MODE columns of the NETWORK screen.

(d) 188-220 communications configurations identify the Device, Baud, COMSEC and MODE. 188-220 configurations with any customized values identify the Device as “CUSTOM/R” for Radio and “CUSTOM/W” for Two-Wire.

# N-6 AFCS INITIALIZATION - CONTINUED

## N-6.3 Initialization After an Orderly Shutdown - Continued

(e) The AFCS will not reorder network configurations as a result of deletions.

(f) The FINISHED and VIEW softkeys are not visible unless at least one configuration is defined.

(g) Softkey sequencing shall be as follows:

SELECT softkey - If the highlighted configuration was previously defined, control transitions to NETWORK SETTINGS-SELECT CONFIGURATION OPTION display. If the highlighted configuration has not been defined, control transitions to NETWORK SETTINGS-STANDARD COMMUNICATION CONFIGURATION display (see para N-6.2c).

FINISHED softkey - When the operator presses the FINISHED softkey, the AFCS stores all defined network configurations and control transitions to Normal Operational Initialization display.

VIEW softkey - When the VIEW softkey is pressed and the currently selected network configuration has been defined, control transitions to the NETWORK SETTINGS display (see para N-6.2e). When the VIEW softkey is pressed and the currently selected network configuration has not been defined, control does not transition.

(h) AFCS supports 11 predefined communications configurations (see Table N-12).

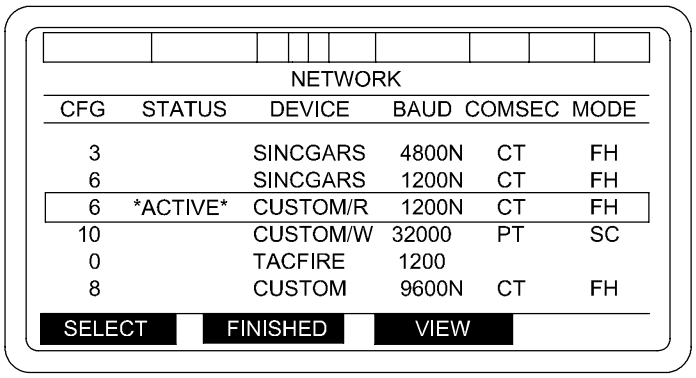


06pc322t

(2) SET DATE/TIME - Select SET DATE/TIME on SETUP AND INFORMATION menu and press SELECT to display a SET DATE/TIME GROUP menu.

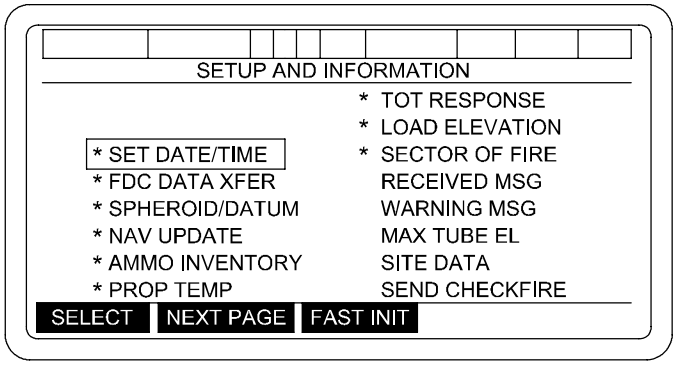


06pc327ta

# N-6 AFCS INITIALIZATION - CONTINUED

## N-6.3 Initialization After an Orderly Shutdown - Continued

**NOTE**

Use according to unit SOP.

If GPS data is available select USE GPS.

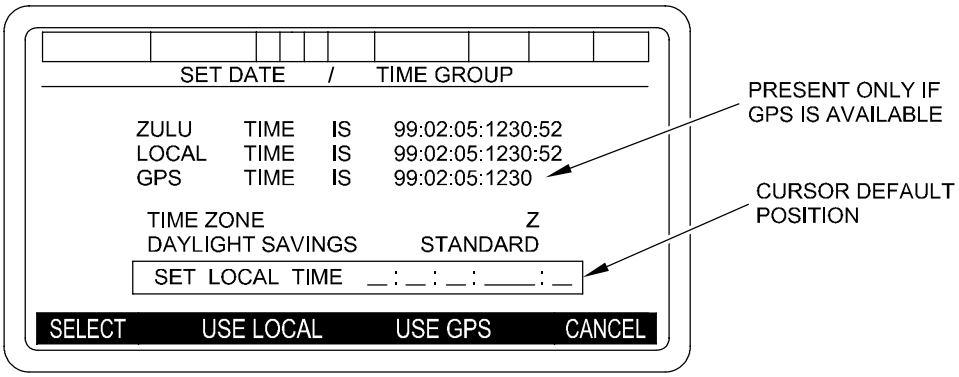


06pc177ta

If GPS is not available or if POC has instructed you not to use GPS time, type in new DTG.

SELECT TIME ZONE - Enter SELECT TIME ZONE in accordance with unit SOP.

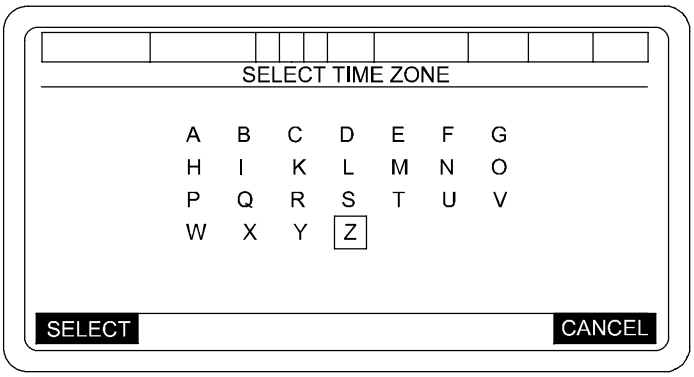


06pc178ta

SELECT DAYLIGHT SAVINGS - Enter DAYLIGHT SAVINGS TIME in accordance with unit SOP.

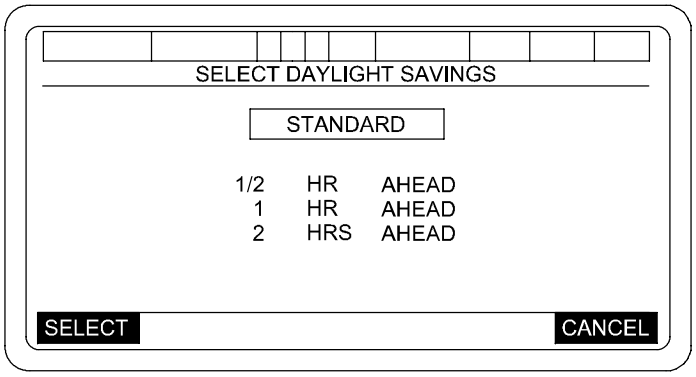


06pc179ta

# N-6 AFCS INITIALIZATION - CONTINUED

## N-6.3 Initialization After an Orderly Shutdown - Continued

Contact the POC by voice radio to obtain the correct date/time data and a MARK. Type in date/time data (year, month, day, hour, minute) as given by the POC. If the data is entered incorrectly a message will be displayed stating “Invalid DTG Value”, and you will have to re-enter the data. When this is done, another SET DATE/TIME GROUP menu will be displayed.

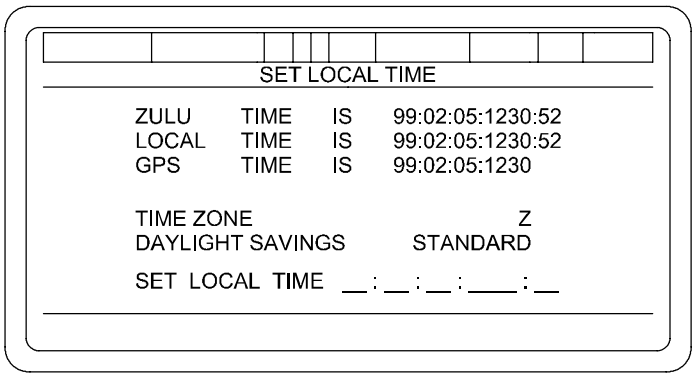


06pc180tb

When the FDC operator gives a countdown and announces MARK, press MARK. The AFCS and FDC time should now be synchronized. A SETUP AND INFORMATION menu is then displayed on the DU.

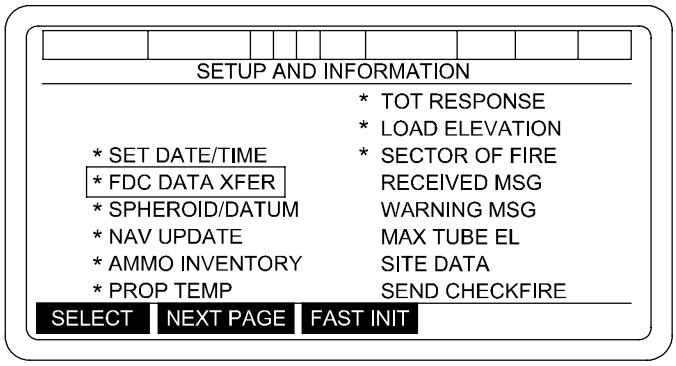


06pc327t

### NOTE

The FDC DATA TRANSFER must be done each time you initialize the AFCS, if the POC/FDC is operational.

(3) FDC DATA TRANSFER - To obtain current initialization data (current MET, registration data, etc.), select FDC DATA XFER on SETUP AND INFORMATION menu. Press SELECT softkey to display a FDC DATA TRANSFER menu.

# N-6 AFCS INITIALIZATION - CONTINUED

## N-6.3 Initialization After an Orderly Shutdown - Continued

The INITIALIZATION menu item will be automatically boxed and the operator will be prompted to press “YES” or “NO”. Pressing YES will cause a message to be sent to FDC requesting initialization data. If you know that FDC is not operational, pressing NO will clear the * from FDC DATA XFER on the SETUP AND INFORMATION menu.

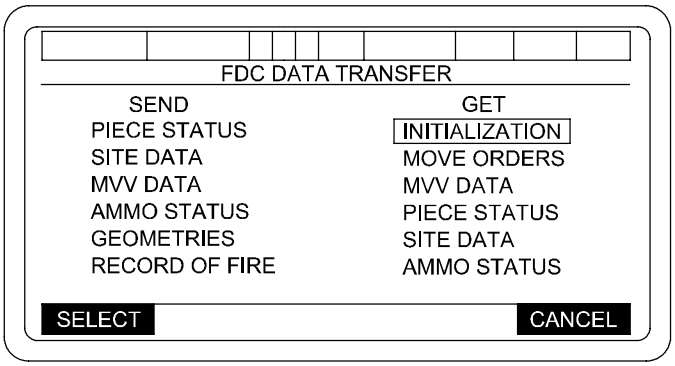


06pc328ta

(4) ENTER SPHEROID/DATUM - The FDC DATA XFER, INITIALIZATION data includes a SPHEROID/DATUM, but does not transfer the necessary map DATUM. To input the correct DATUM, box in the “ENTER SPHEROID/DATUM” and press the SELECT key. This brings up the SPHEROID/DATUM entry menu.

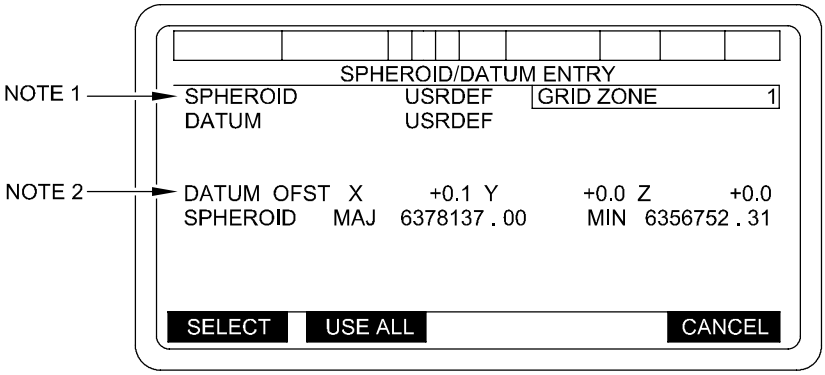


06pc249tc

Check to see that all the data is correct. If it is correct, press the USE ALL key, and proceed with the initialization. If an entry is not correct, select that field and make corrections.

NOTE 1 Selection of this field will display select spheroid menu.

NOTE 2 Field is only present if user defined (USRDEF) spheroid is used.

# N-6 AFCS INITIALIZATION - CONTINUED

## N-6.3 Initialization After an Orderly Shutdown - Continued

When grid zone is selected, the following will be displayed:

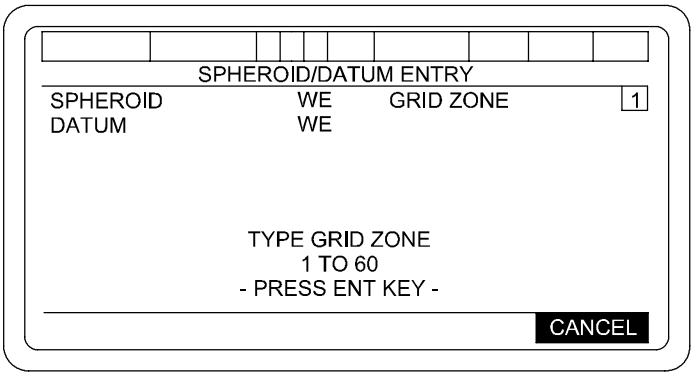


06pc250ta

When DATUM is selected, SELECT DATUM menu is displayed:

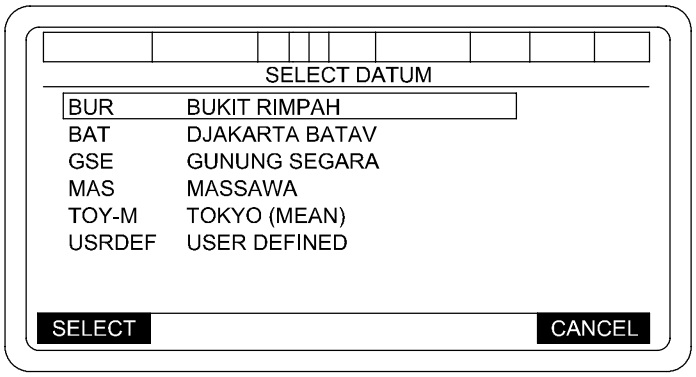


06pc253ta

Box in the correct DATUM and press the SELECT key. The DATUMs available are dependent on the SPHEROID selected. See AFCS/FDC Spheroid and Datum table in appendix J.1 for Spheroid/Datum combinations.

# N-6 AFCS INITIALIZATION - CONTINUED

## N-6.3 Initialization After an Orderly Shutdown - Continued

### NOTE

The reference frame for UTM position coordinates is a DATUM. Typically, a Local DATUM is defined by an ellipsoidal earth model (SPHEROID) and a starting point (origin) for the coordinate system. Coordinates on a map or in a Trig list (SCPs) often are on a Local DATUM. An example of a Local DATUM is the North American 1927 (NAD 27) DATUM used in the United States. There have been many different Local DATUMs developed. GPS computes position on the World Geodetic System 1984 (WGS 84), a worldwide coordinate system. To use GPS with coordinates on a Local DATUM, the coordinates must be mathematically shifted. The AFCS (DRUH and PLGR/DAGR) can automatically perform DATUM shifting, but first the operator must select the Local DATUM to be used, or provide the appropriate shift parameters. For AFCS operation, Local DATUMs are represented by two sets of parameters: The Local Ellipsoid (SPHEROID) and shift parameters as defined for each Local DATUM (DATUM IDs). The FDC can provide the SPHEROID. But the FDC cannot provide the Local DATUM. Therefore the operator must enter it. The SPHEROID selected will determine which DATUM IDs will be available for selection. The AFCS/FDC SPHEROID and DATUM TABLE, in appendix J.1, provides the SPHEROID number for the AFCS and FDC, which DATUM IDs are available for that SPHEROID number and the normal coverage area. Note that there may be more than one DATUM ID associated with a Local DATUM because the shifts vary by locality. For other DATUMs or areas outside the indicated coverage area, User Defined (USRDEF) Datum shifts may be entered manually. The table is not intended as an absolute. A map sheet will identify the DATUM name, Ellipsoid (SPHEROID) name and the coordinate type, or the map sheet will identify the area. The data from a Trig list should identify the same information. These parameters must be correlated to the DATUM ID. If the applicable DATUM ID hasn't been programmed in the AFCS, shift parameters for many other DATUMs and regions have been published in DMA TR 8350.2 and may be entered thru the DATUM X, Y and Z offsets. Note that the AFCS cannot accept shift parameters for all datums because the Spheroid capability is limited to those listed in the AFCS/FDC Spheroid and Datum table in appendix J.1.

# N-6 AFCS INITIALIZATION - CONTINUED

## N-6.3 Initialization After an Orderly Shutdown - Continued

If the DATUM USR DEF is selected, then the DATUM X, Y, and Z offsets must be entered. These values must be obtained from the POC and should only be used with guidance from Battery Commander. The ENTER USER DATUM PARAMETERS page should look like:

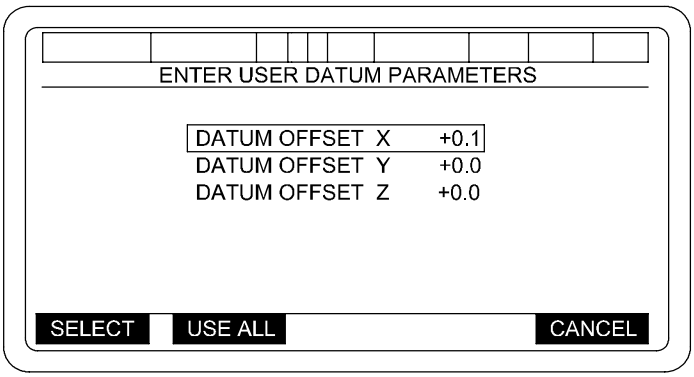


06pc254ta

When DATUM OFFSET X is selected:

Type -2000.0 TO +2000.0:
Press ENT key.

When DATUM OFFSET Y is selected:

Type -2000.0 TO +2000.0:
Press ENT key.

When DATUM OFFSET Z is selected:

Type -2000.0 TO +2000.0:
Press ENT key.

After all the correct data has been entered, press the USE ALL key to clear and return to the main menu.

(5) NAVIGATION UPDATE - Select NAV UPDATE and press SELECT soft key to display a NAVIGATION SUBSYSTEM UPDATE menu.

### NOTE

- If vehicle has not been moved since orderly shutdown, the Navigation Subsystem will initiate a Stored Heading Align, which will be completed in about 90 seconds.
- If vehicle has been moved since orderly shutdown, move vehicle to a survey point and enter survey data.

# N-6 AFCS INITIALIZATION - CONTINUED

## N-6.3 Initialization After an Orderly Shutdown - Continued

Check data for correctness. If correct, press USE ALL softkey. The prompt, NAV POSITION UPDATE TO START, ARE YOU SURE (YES OR NO), will be displayed. Make proper selection. Press the YES key to RESTART the Navigation Subsystem and display the SETUP AND INFORMATION menu.

Press the NO key to redisplay NAVIGATION SUBSYSTEM UPDATE menu. Make corrections or press CANCEL to display SET UP AND INFORMATION menu.

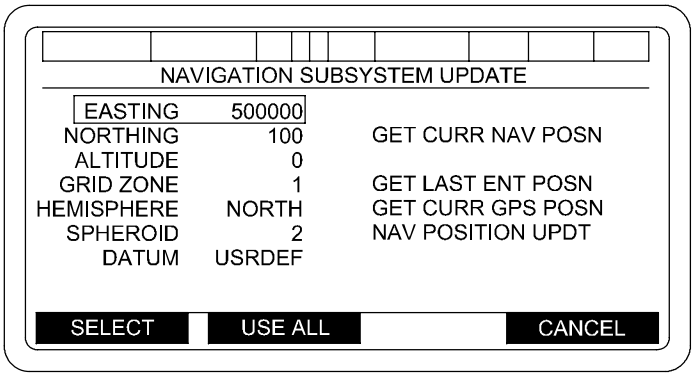


06pc144ma

(6) AMMO INVENTORY - Select AMMO INVENTORY on the SETUP AND INFORMATION menu. Press SELECT softkey to display INVENTORY MANAGEMENT menu.

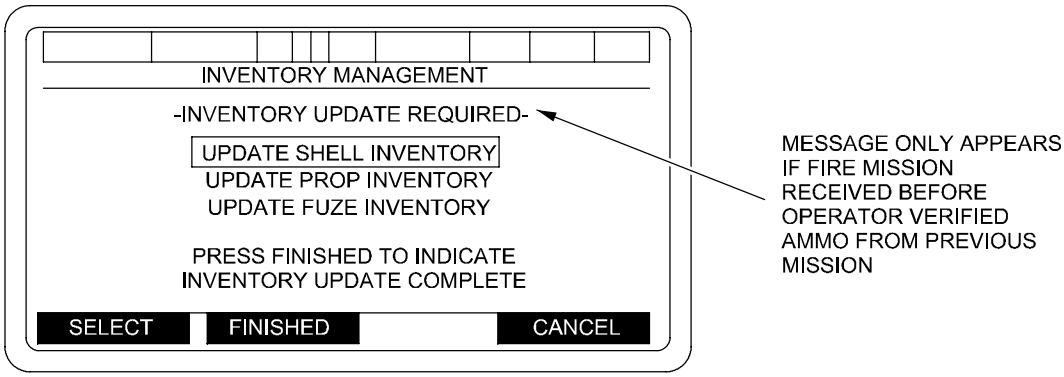


06pc145ma

**NOTE**

If a fire mission is activated while in any of the ammunition inventory sub-menus, all valid complete entries shall be saved.

If the ammunition inventory is current, press FINISHED softkey to display the SETUP AND INFORMATION menu. If ammunition inventory is not current, to enter ammunition data, refer to para N-6.2.

# N-6 AFCS INITIALIZATION - CONTINUED

## N-6.3 Initialization After an Orderly Shutdown - Continued

(7) PROPELLANT TEMPERATURE - Select PROP TEMP on SETUP AND INFORMATION menu. Press SELECT key to display a PROPELLANT TEMPERATURE menu.

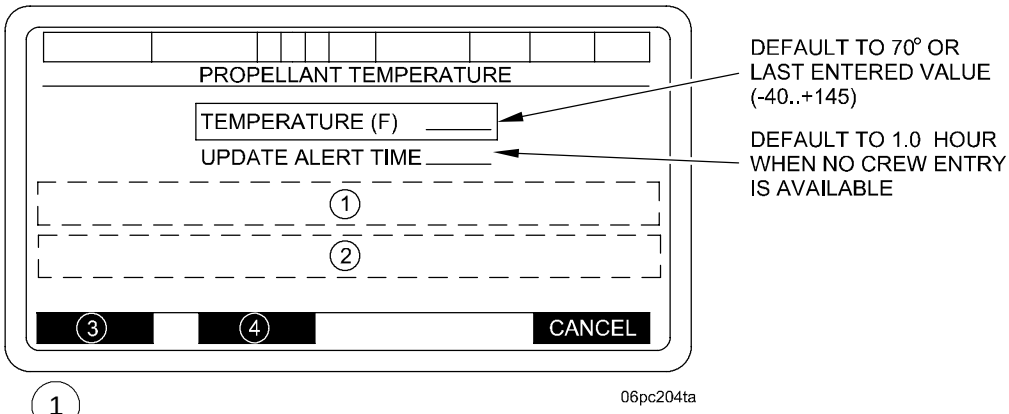


06pc204ta

(1) TIME TO GO XX:XX (HOURS:MINUTES) OR TIME EXCEEDED

(2) WHEN TEMPERATURE (F) SELECTED
TYPE TEMPERATURE IN FAHRENHEIT
DEGREES -40 TO +145
- PRESS ENT KEY -

WHEN UPDATE ALERT TIME SELECTED
TYPE UPDATE TIME IN 0.5 HOUR
INCREMENTS 0.5 TO 2.0
- PRESS ENT KEY -

(3) BLANK - WHEN TEMPERATURE (F) OR UPDATE ALERT TIME SELECTED
SELECT - WHEN ITEM IS NOT SELECTED

(4) USE ALL - WHEN NO ITEM IS SELECTED
+/- WHEN TEMPERATURE (F) IS SELECTED
BLANK - WHEN UPDATE ALERT TIME IS SELECTED

# N-6 AFCS INITIALIZATION - CONTINUED

## N-6.3 Initialization After an Orderly Shutdown - Continued

If displayed temperature and update alert time are correct, press USE ALL key. If another temperature or alert time entry is necessary, box the desired item and press SELECT key. Type in new temperature or alert time and press ENT key. When entries are correct, press USE ALL key. The SETUP AND INFORMATION menu will be displayed.

(8) TOT RESPONSE - To access the TOT RESPONSE menu, press NEXT PAGE key to display next page of SETUP AND INFORMATION menu.

Select TOT RESPONSE and press SELECT to display a TOT RESPONSE menu.

Type in desired time to be used and press ENT key. The SETUP AND INFORMATION menu will be displayed.

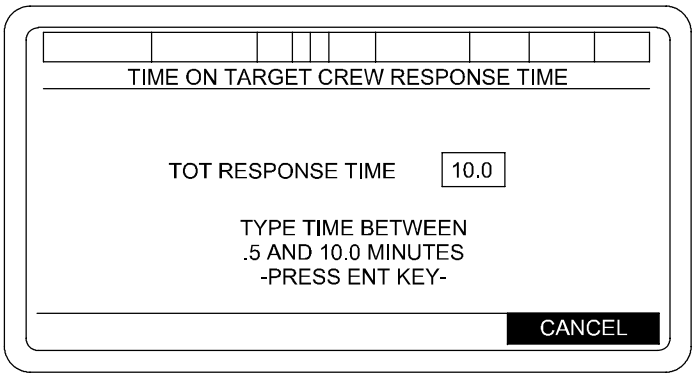


06pc136ma

(9) Select LOAD ELEVATION on the SETUP AND INFORMATION menu. Press SELECT key to display a TUBE LOAD ELEVATION menu.

**CAUTION**

Do not enter an elevation greater than 300 mils. Settings above 300 mils may result in breech failing to close and could cause unnecessary wear on spring pack.

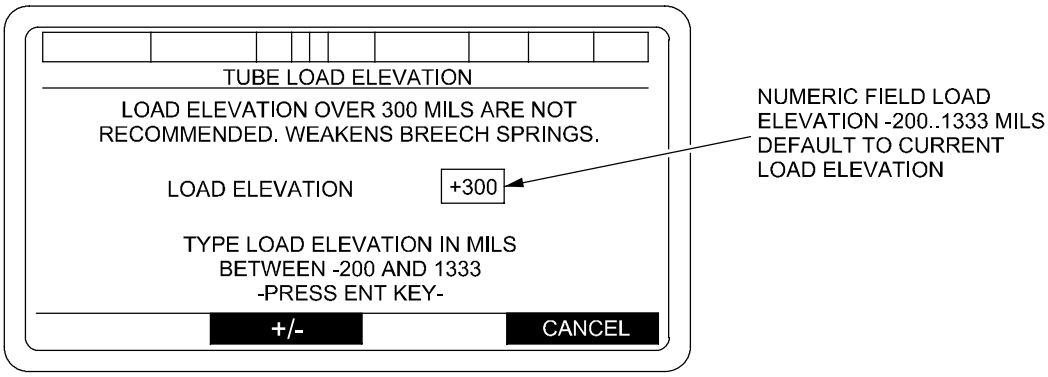


06pc135ma

If load elevation shown is the desired elevation, press ENT key. If a new elevation is desired, type in desired elevation and then press ENT key. The SETUP AND INFORMATION menu will be displayed.

# N-6 AFCS INITIALIZATION - CONTINUED

## N-6.3 Initialization After an Orderly Shutdown - Continued

(10) Select SECTOR OF FIRE on SETUP AND INFORMATION menu. Press SELECT softkey to display a DEFINE SECTOR OF FIRE menu.

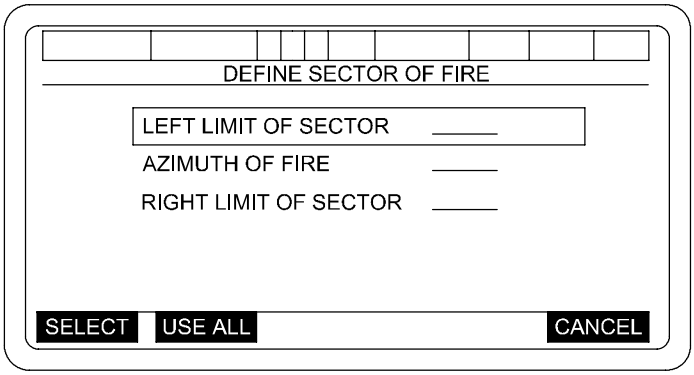


06pc205tc

If data displayed on menu is desired sector of fire, press USE ALL softkey. If a change is needed, select area to be changed, type in change and press ENT key. Repeat for additional changes, when complete press USE ALL softkey. The following message will be displayed: “ARE YOU SURE” “YES” “NO”. If YES is selected, data will be updated and the display will return to SETUP and INFORMATION menu. If NO is selected, the message will be removed for re-entry of data. A POS UPDATE or NAV RESTART must be performed if the changes are to be used by the AFCS.

(11) SECTION IN ORDER - When navigation alignment time has been completed, or message “OK TO MOVE OR SHOOT” “ACK” has been acknowledged, a CANCEL prompt will appear on the SETUP AND INFORMATION menu. Press CANCEL to display the SECTION IN ORDER AT INITIALIZATION POINT screen.

The AFCS system is now initialized and can perform missions as directed.

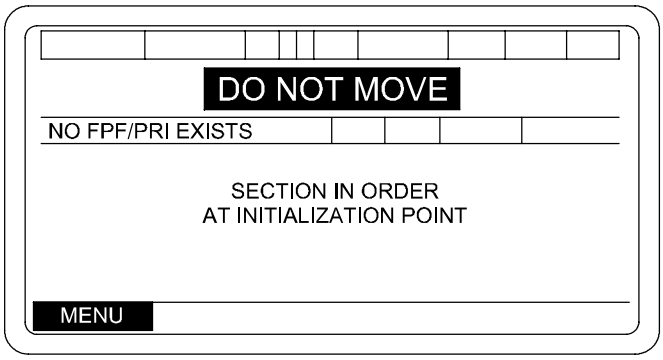


06pc148ma

# N-6 AFCS INITIALIZATION - CONTINUED

## N-6.4 Initialization After a Catastrophic Failure.

a. If a catastrophic failure (e.g., sudden loss of power of PCU) occurs, it is possible that no data at all will be saved by the AFCS. In this case, a step-by-step-system initialization must be done.

**NOTE**

- Position data must be recorded prior to pressing ARRIVED key during emplacement. If time permits the crew should also set out collimator or select a DAP and set 3200 Deflection on the PANTEL on Center of Sector (Base Azimuth).
- To be able to react quickly to re-initialize a failed AFCS, a Platoon SOP voice request procedure from crew to POC to send all required data messages from FDC may be helpful. Data that would be useful from FDC are: INITIALIZATION (Subscriber File, Map Mode, MET, Registration), MUZZLE VELOCITY, Current Position (to include Sector of Fire) and Propellant Temp (PIECE STATUS), SITE STATUS, and AMMO STATUS.

b. Getting Data. To return to Section in Order as fast as possible after a catastrophic failure of the AFCS, return the tube to travel lock before shutting AFCS power off. Wait about 5 seconds, then turn AFCS power on. Begin the Initialization process as normal, working off the * menu items on the SETUP AND INFORMATION menus. If FDC has current data, get as much data as you can from FDC. This data can be obtained as follows:

(1) Box FDC DATA XFER on the SETUP AND INFORMATION menu and press SELECT key. The INITIALIZATION item under the GET column will be boxed as usual. Press YES to transmit the request for INITIALIZATION data (Subscriber File, Map Mode, MET and Registration).

(2) Next, box MUZZLE VELOCITY under the GET column and press SELECT key. Press YES key to transmit the request to FDC.

**NOTE**

The AFCS automatically uses the Muzzle Velocity data sent by FDC. No further action is necessary by the crew.

(3) Repeat the last step for PIECE STATUS, SITE STATUS, and AMMO STATUS.

(4) Once all requests have been sent, press CANCEL key to move to the next initialization step on the SETUP AND INFORMATION menu.

c. Nav Update.

(1) Use your current position data that you recorded upon emplacement.

(2) If POC has a current location where the failure occurred, use that data for navigation initialization. To use position data obtained from FDC in the step above, box NAV UPDATE on the SETUP AND INFORMATION menu, press SELECT key and a NAV SUBSYSTEM UPDATE menu will be displayed. Box GET FDC PRPT POSN and press SELECT key. Press USE ALL key, and AFCS will use the FDC reported position data and return to the SETUP AND INFORMATION menu.

# N-6 AFCS INITIALIZATION - CONTINUED

## N-6.4 Initialization After a Catastrophic Failure - Continued

(3) Another howitzer with an operational DRUH and AFCS can pull into failed howitzer's position (left hub to left hub) and provide navigation data to be entered on the keyboard.

**NOTE**

If no FDC-provided Move Order is expected after AFCS initialization, then the Sectors of Fire must be changed to those provided by the FDC prior to the failure. Sector of Fire entries must be completed prior to inputting a manual Move Order.

(4) The failed howitzer can be taken to a surveyed point and navigation initialized from survey data.

d. Ammo Inventory. To use ammunition inventory data obtained from FDC in the step above, box AMMO INVENTORY on the SETUP AND INFORMATION menu, press SELECT key and INVENTORY MANAGEMENT menu will be displayed. Box EDIT FDC PROVIDED and press SELECT key. When the FINISHED key is pressed the ammunition inventory shall be reviewed to insure each group of projectiles has at least one propellant and each group of propellants has at least one projectile. If a projectile is found without a propellant or a propellant without a projectile, AFCS will display PROJECTILE/PROPELLANT MISMATCH menu. Pressing the CONTINUE softkey on this menu will return operator to the INVENTORY MANAGEMENT menu, at which time the operator has to update SHELL/PROP inventory. On the next INVENTORY MANAGEMENT menu, press FINISHED to accept the FDC PROVIDED data. If you want to check the ammo inventory for accuracy, then box and select UPDATE SHELL, UPDATE PROP, and UPDATE FUZE one at a time (para N-6.2l(5)).

e. Site Definition. To use Site data obtained from FDC in the step above, box SITE DATA on the SETUP AND INFORMATION menu, press SELECT key and SITE DEFINITION menu will be displayed. Box GET FDC SITE and press SELECT key (This option will only be available if the POC has sent an AFU mask to the AFCS). Press USE ALL, and the FDC provided Site Data will be used by the AFCS.

## N-7 AFCS TRAVEL MODE.

During the travel mode the navigation system provides a continuous position data display to the operator. The data displayed on the EL Panel will show UTM coordinates for both position and destination. Also included is a graphic display showing where the vehicle is traveling in relation to destination. After alignment, the AFCS will automatically go into travel mode when the howitzer starts to move.

### N-7.1 Movement.

Once the howitzer has been initialized and the navigation system has had time to align, a CANCEL softkey will appear on the main menu. To view a SECTION IN ORDER AT INITIALIZATION POINT screen, press the CANCEL softkey.

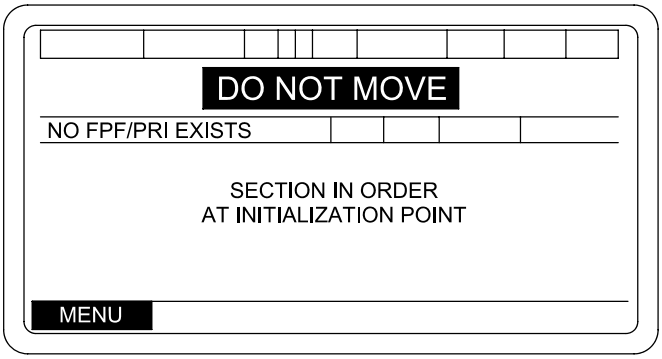


06pc148ma

**NOTE**

- DO NOT MOVE the howitzer until you see OK TO MOVE OR SHOOT, ACK message.
- You may then move the howitzer or accept fire missions, but you can expect ZUPT requests during moves if the ALN_ _ _S is still counting down.

N-7.1.1 Move Order. Upon receipt of a Move Order, an audio alert will sound and an OPERATOR ALERT and a STEERTO/EMPLACEMENT screen will automatically appear if the system display was at a SECTION IN ORDER screen. If the SET UP AND INFORMATION screen is displayed a MOVE ORDER alert will appear in field 3 of the screen, and an OPERATOR ALERT, “MOVE MISSION” “ACK”, will be displayed and the CANCEL softkey must be pressed to display the STEERTO/EMPLACEMENT screen. Once the vehicle has moved about 25 meters an audible and softkey alert “PRESS ACK WHEN TUBE STOWED” “ACK” will be displayed. Acknowledge the tube is stowed and press ACK softkey.

# N-7 AFCS TRAVEL MODE - CONTINUED

## N-7.1 Movement - Continued

N-7.1.1 Move Order - Continued

STEERTO display screens:

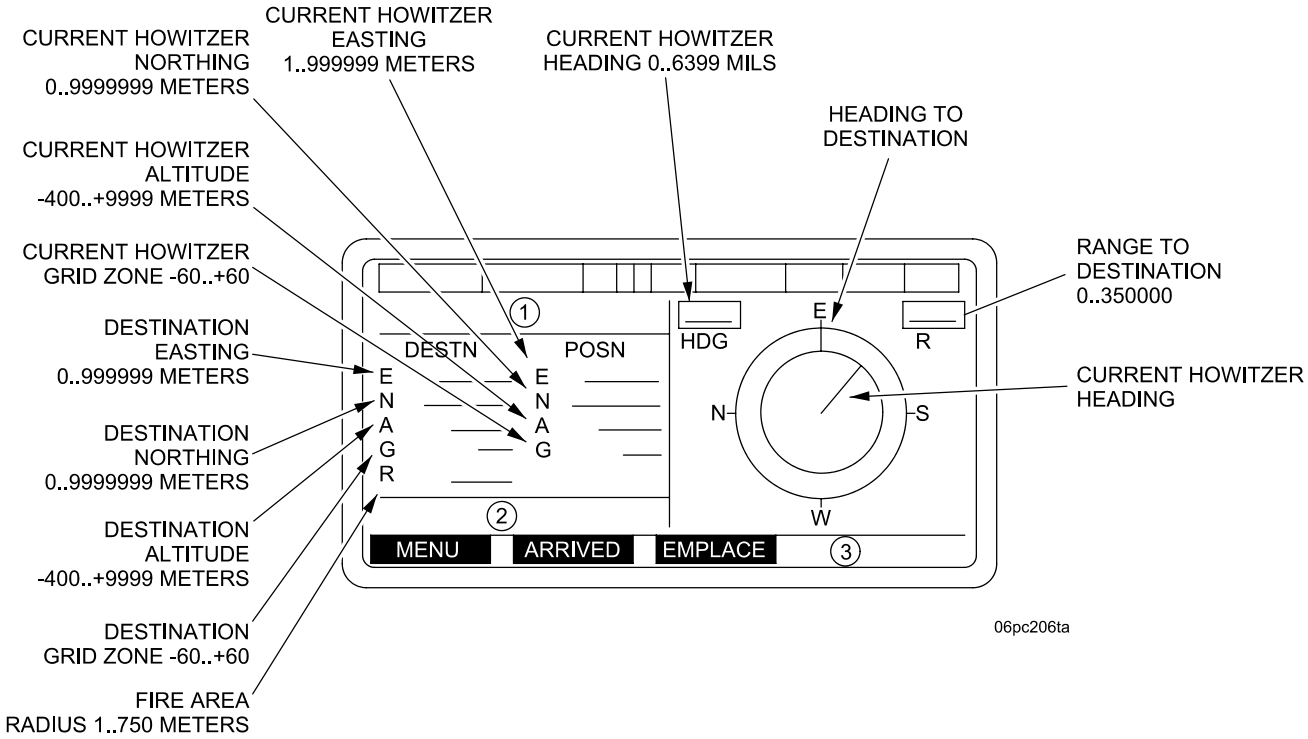


(1) "STEERTO FIRE AREA" - Destination is Fire Area
"STEERTO INIT POINT" - Destination is Initialization point
"STEERTO LOG POINT" - Destination is Logistics Point
"STEERTO FIRE POINT" - Destination is Fire Point

(2) "ORDERED MOVE IN PROGRESS"
"STOP MOVING AND WAIT"
"MOVE IN PROGRESS"
"NO AUTHORITY OR ORDERS TO MOVE"
"AWAITING START OF ORDERED MOVE"
"DO NOT START ORDERED MOVE"

(3) "ZUPT REQUIRED"
"NAV POS UPDATE REQUIRED"

# N-7 AFCS TRAVEL MODE - CONTINUED

## N-7.1 Movement - Continued

N-7.1.1 Move Order - Continued

The STEER TO FIRE AREA screen contains the following:

a. MO - Describes Move Order status.

b. DESTN - Indicates destination coordinates: (E) Easting, (N) Northing, (A) Altitude, (G) Grid Zone, (R) Radius of operating area,

c. POSN - Indicates present howitzer position: (E) Easting, (N) Northing, (A) Altitude, (G) Grid Zone.

d. HDG - Howitzer's numerical heading in Mils (Azimuth).

e. RNG - Range to destination in radial distance.

f. Graphic Display - N, E, S, W on outer circle, indicates North, East, South and West and rotates like a compass. The line running from the center of display to edge of the inner circle indicates present vehicle heading. The line between the inner and outer circle indicates the desired heading. When these two lines are aligned, the vehicle is traveling toward destination.

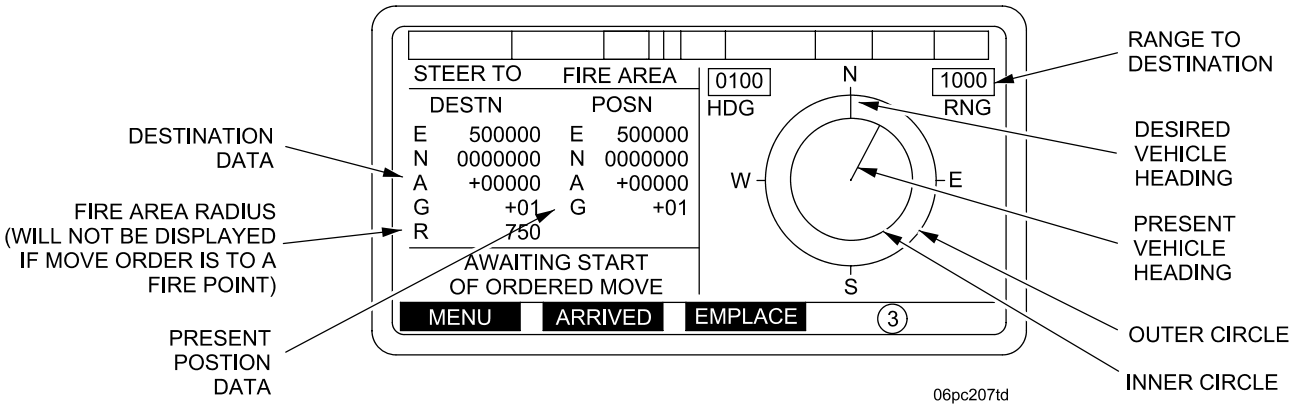

# N-7 AFCS TRAVEL MODE - CONTINUED

## N-7.1 Movement - Continued

N-7.1.2 Moving. During movement of the howitzer, the STEER TO FIRE AREA screen will assist the operator in locating his destination. While the howitzer is on the move, the following will occur:

a. The graphic portion of the display will indicate the howitzer's movement by the outer circle of the display moving according to the vehicle heading. The line from center of the display to the inner circle will move as the howitzer changes directions.

b. The alphanumeric portion of the display under POSN will provide the operator with his current position constantly. The display above HDG will change as the howitzer changes headings and the display above RNG will change to indicate whether the movement is away from destination (increase) or toward destination (decrease).

c. Navigation system update may occur (zero velocity update) to maintain location accuracy.

N-7.1.3 Zero Velocity Updates. "Periodic Zero Velocity Updates (ZUPT) may be required if the VMS fails or is out, and the GPS is not valid. ZUPTs are required to increase the accuracy of the Navigation Subsystem. To insure proper Navigation Subsystem Operation and to maintain system performance accuracies, ALL Requested ZUPTs must be honored". When an update is required, the AFCS will notify the operator with an audible alert and "ZPT" will appear in Field 6 and a softkey alert "ZUPT REQUIRED", "ACK". To accomplish a ZUPT, perform the following steps:

a. Stop the vehicle as soon as possible after the alert (the less time traveled between each ZUPT, the better the system accuracy).

b. Press ACK key to acknowledge operator alert.

c. Remain stopped until ZUPT is complete. ZUPT is done automatically during this period.

When the ZUPT is complete, another operator alert will be displayed, "ZUPT NO LONGER REQUIRED", "ACK". "ZPT" is no longer displayed in status line. Press ACK key, then vehicle movement can be continued.

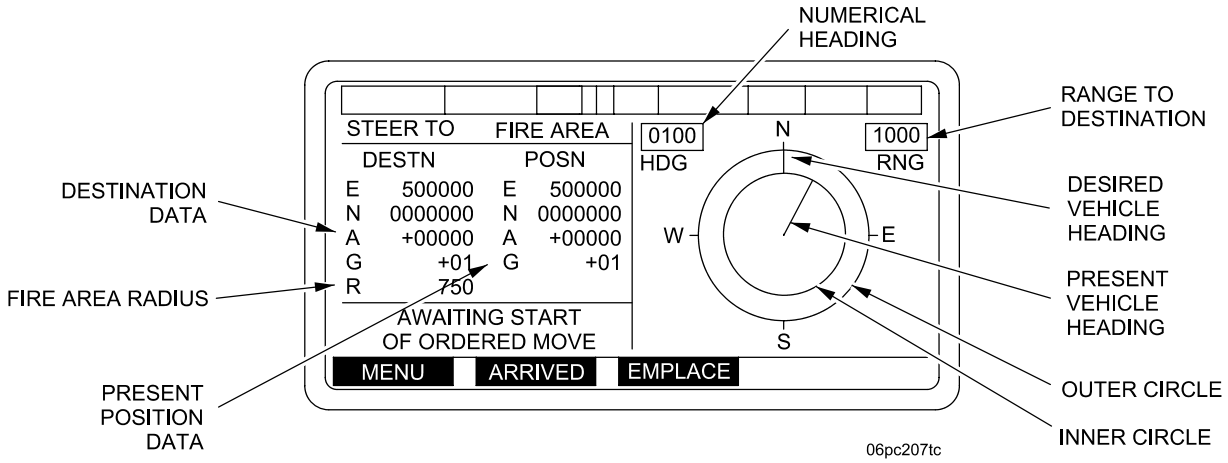

# N-7 AFCS TRAVEL MODE - CONTINUED

## N-7.1 Movement - Continued

N-7.1.4 Moving with Navigation System Degraded. If a navigation system failure occurs while the howitzer is moving, the operator will be alerted visually with a NAVIGATE ON YOUR OWN TO DESTINATION display. The chief of section must use established navigation procedures to reach the destination shown. If only the PLGR/DAGR is operational there will be no HDG information on the display.

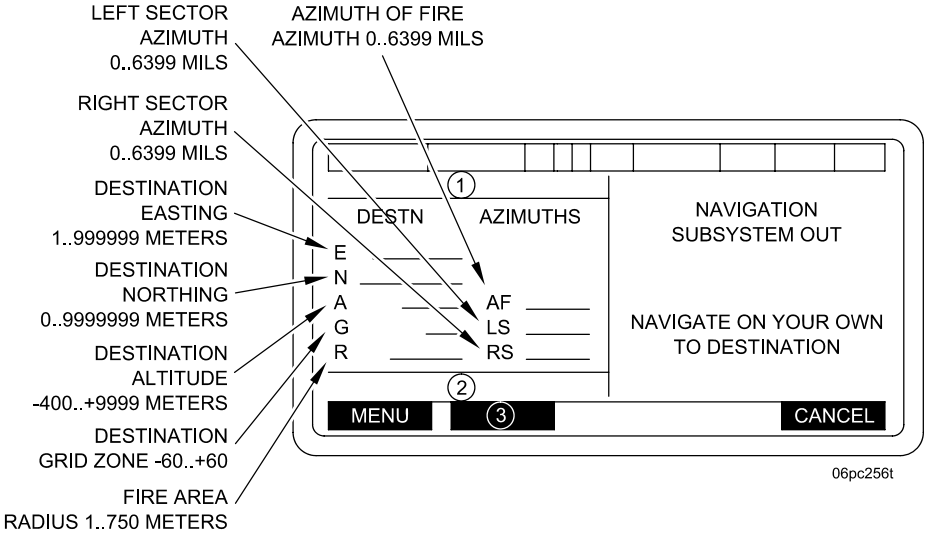


(1) "DEGRADED FIRE AREA" - Destination Is Fire Area

"DEGRADED INIT POINT" - Destination Is Initialization Point

"DEGRADED LOG POINT" - Destination Is Logistics Point

"DEGRADED FIRE POINT" - Destination Is Fire Point

(2) "ORDERED MOVE IN PROGRESS"

"STOP MOVING AND WAIT"

"MOVE IN PROGRESS"

"NO AUTHORITY OR ORDERS TO MOVE"

"AWAITING START OF ORDERED MOVE"

"DO NOT START ORDERED MOVE"

(3) MOVING softkey only appears when the Navigation System is DEGRADED or OUT. Press MOVING softkey after vehicle starts moving to inform the navigation system that the vehicle is on the move. Press ARRIVED key when vehicle has arrived at destination.

# N-7 AFCS TRAVEL MODE - CONTINUED

## N-7.2 Emplacement Fire Point/Fire Area.

When the howitzer enters the radius the AFCS will display the Emplacement at a FIRING AREA/POINT screen depending on type of MOVE ORDER received.

The EMPLACE FIRE POINT screen is also used for DESTINATION TYPES, INITIALIZATION POINT and LOGISTICS POINT emplacement.

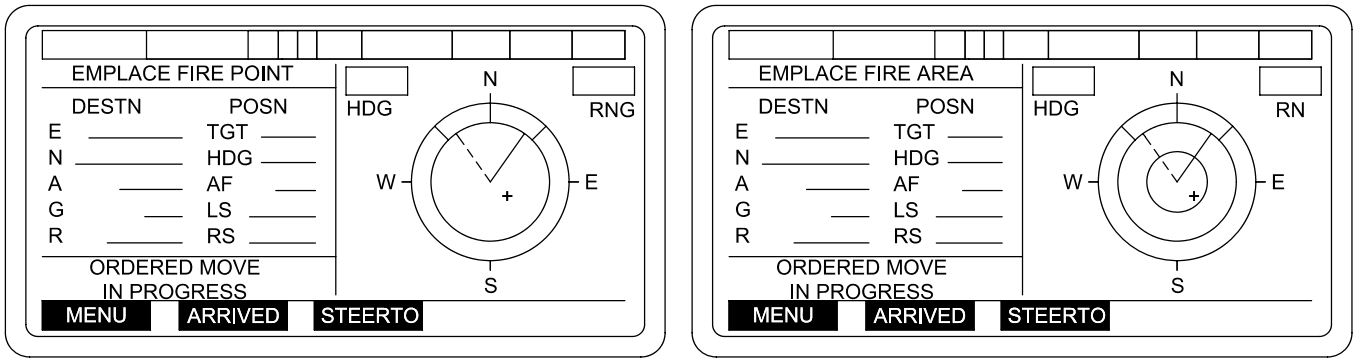


06pc257tb

# N-7 AFCS TRAVEL MODE - CONTINUED

## N-7.2 Emplacement Fire Point/Fire Area - Continued

EMPLACE FIRE AREA Screen - The data on the EMPLACE FIRE AREA screen is the same as the STEER TO FIRE AREA screen with the following exceptions:

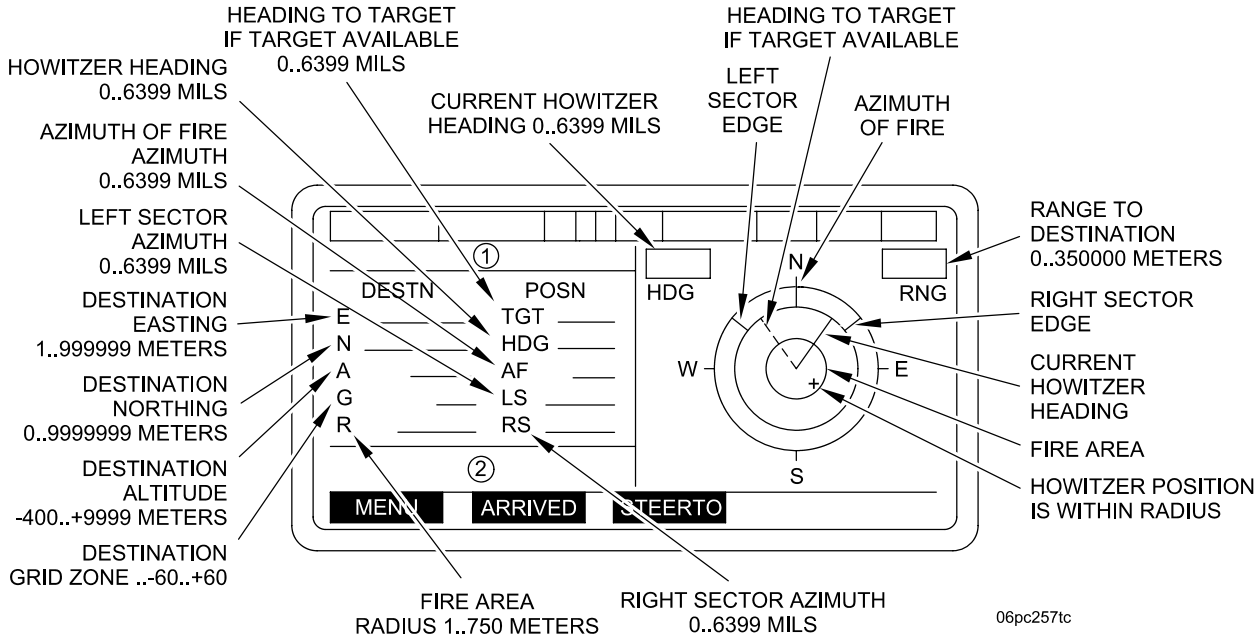


(1) "EMPLACE FIRE AREA" - Destination Is Fire Area

"EMPLACE INIT POINT" - Destination Is Initialization Point

"EMPLACE LOG POINT" - Destination Is Logistics Point

"EMPLACE FIRE POINT" - Destination Is Fire Point

(2) "ORDERED MOVE IN PROGRESS"

"STOP MOVING AND WAIT"

"MOVE IN PROGRESS"

"NO AUTHORITY OR ORDERS TO MOVE"

"AWAITING START OF ORDERED MOVE"

"DO NOT START ORDERED MOVE"

# N-7 AFCS TRAVEL MODE - CONTINUED

## N-7.2 Emplacement Fire Point/Fire Area - Continued

a. Plus Sign - Represents the vehicle. When the vehicle is within the allowable move area assigned by the Platoon Operation Center (POC), the "+" will appear on the display. As the vehicle moves, the plus sign will also move, indicating direction of travel.

b. Inner Circle - Represents the Allowable Movement Area and will vary in size. This is determined by the radius of the Fire Area and is assigned by POC with a Move Order. This circle is an Emplacement Aid.

**NOTE**

- If EMPLACEMENT screen was accessed prior to arriving at next firing area the EMPLACEMENT screen may not display automatically.
- Once the vehicle is within the inner circle (shown by the + sign) the CHIEF OF SECTION may choose his emplacement position to take advantage of terrain features.

c. The line running from middle circle to outer circle between N and E represents Right Sector of Fire and the line between N and W represents Left Sector of Fire. The line under N represents Azimuth of Fire. The sector of fire is assigned by POC with the Move Order.

d. Solid Line - Represents the current heading. It extends from the center of the smallest circle to the edge of the middle circle. When this line is aligned with the line under the "N", the vehicle is travelling toward the ordered destination.

e. Dotted Line - Represents the gun-target line to a Final Protective Fire (FPF) target (if stored on AFCS) and is designated by the POC.

f. Destination - Represented by the intersection of the solid line and the dotted line at the center of the smallest circle.

g. Azimuths - Display of azimuths in Mils to TGT (FPF target if one exists), HDG (present howitzer heading), AF (Azimuth of Fire), LS (Left Sector of Fire), RS (Right Sector of Fire).

N-7.2.1 Emplacing. Once the plus sign is within the designated firing area the howitzer has reached it's destination. The howitzer is then maneuvered until vehicle heading (solid line from the center of the smallest circle to the edge of the middle circle) is aligned as closely as possible with the Azimuth of Fire Line (center solid line between the middle and outer circle). When these lines are aligned, the howitzer is roughly laid on the Azimuth of LAY.

**NOTE**

- DRUH position data improves approximately 30 seconds after the howitzer is stopped. The chief of section has the option of awaiting this time and then pressing the ARRIVED softkey to achieve optimum positioning data. However, this option should not be considered during an emergency fire mission. (EMERGENCY MISSION)
- Before pressing ARRIVED key you must record your position data and Azimuth of Fire (Base Azimuth) in case the AFCS fails.

# N-7 AFCS TRAVEL MODE - CONTINUED

## N-7.2 Emplacement Fire Point/Fire Area - Continued

N-7.2.1 Emplacing - Continued

### NOTE - Continued

- If cab-side VMS modem is disconnected and position data is not available from the PLGR/DAGR, the DRUH position data will degrade even though the howitzer is not moving. This data may degrade to the point where the navigation subsystem will be declared out.
- The softkey under ARRIVED on the MOVE ORDER screen must be pressed before the gun tube is unstowed from travel lock. This action establishes the TUBE STOW (travel lock) position. Pressing the STOW key will move the tube back to this azimuth.
- If EMPLACEMENT screen was accessed prior to arriving at next firing area the EMPLACEMENT screen may not display automatically.
- Once the vehicle is within the inner circle (shown by the + sign) the CHIEF OF SECTION may choose his emplacement position to take advantage of terrain features.
- When emplacing the howitzer, the Azimuth of Fire (Azimuth of LAY) from the Move Order is the azimuth the AFCS holds as the “Base Azimuth” (the 3200 deflection reference position). This is the azimuth used by the AFCS to compute ballistic data, and is also sent to the FDC in the PIECE STATUS (HOW: UPDATE) message for ballistic computations at the FDC.
- When emplacing at a FIRING POINT the howitzer range must be 50 meters or less. (Optimum 10 meters or less)

Press the ARRIVED softkey on the EMPLACE FIRE AREA or Fire Point Site Definition screen to display a SITE DEFINITION screen. Take the tube out of travel lock.

# N-7 AFCS TRAVEL MODE - CONTINUED

## N-7.2 Emplacement Fire Point/Fire Area - Continued

N-7.2.1 Emplacing - Continued

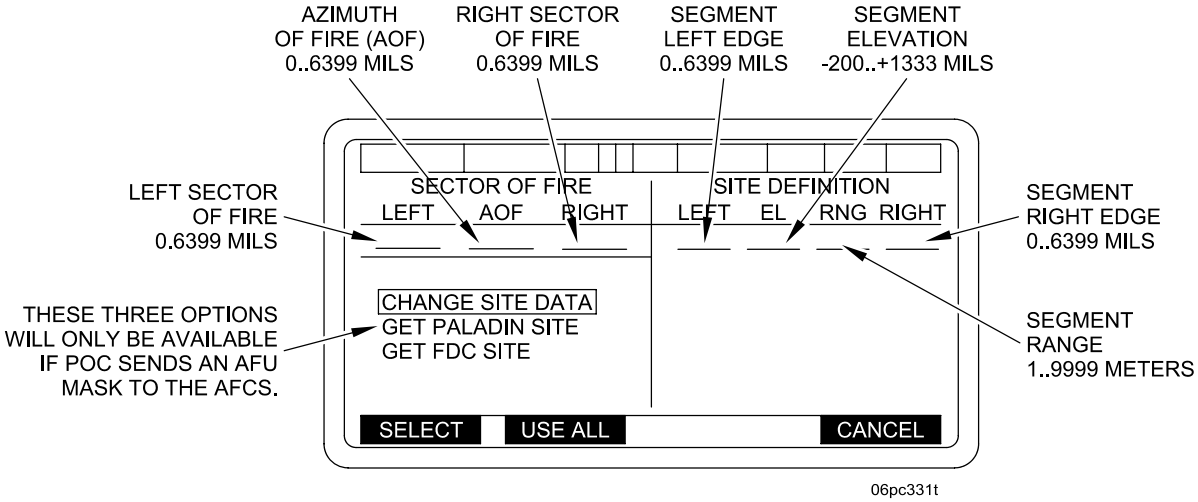


Automatic selection boxing will occur starting from field LEFT and then continuing from LEFT to RIGHT, to field EL RNG and RIGHT, after each previous entry has been ENTERED.

N-7.2.2 Site Data. Identifies left and right limits, range and elevation in mils, and is used to ensure that all rounds clear crests within the howitzer's SECTOR OF FIRE. Up to eight sets of site definition data can be entered. Site definition data is determined using the same procedures as SITE TO CREST (sighting through the cannon tube). This data is entered using the SITE DEFINITION screen as follows:

a. Obtain SECTOR OF FIRE data from POC. Normally Azimuth of Fire, Left and Right Sector limits will be provided by the POC in the Move Order and will be displayed automatically on the SITE DEFINITION menu on the left side of the screen under LEFT AOF RIGHT headings.

b. Press the DELETE key to remove SITE DATA from previous occupation. Box in limit under column to be changed and press the SELECT key.

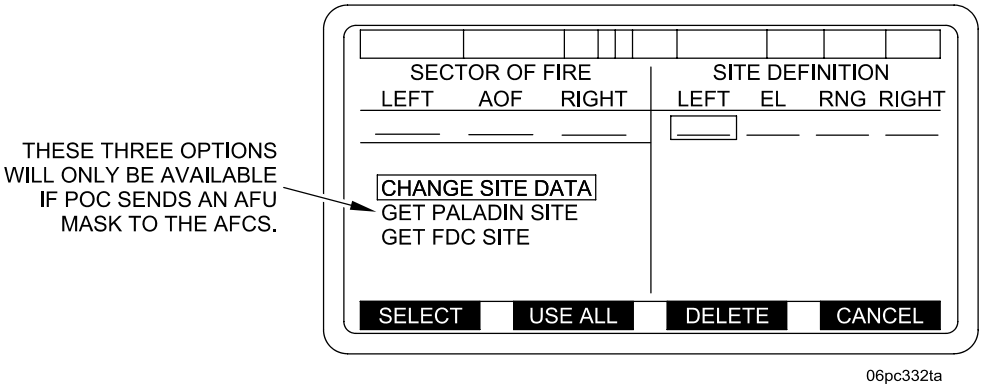

# N-7 AFCS TRAVEL MODE - CONTINUED

## N-7.2 Emplacement Fire Point/Fire Area - Continued

N-7.2.2 Site Data - Continued

c. One Line SITE DATA (For Initial Occupation). Pressing the ARRIVED key the COS must obtain One Line SITE DATA. AFTER removing the gun tube from the travel lock the COS brings the cursor box to the left limit and presses SELECT, then traverses the gun tube to the left while monitoring the Azimuth readout until he reaches at least one mil beyond the Left limit then press ENTER. While the GUNNER sights through the gun tube the COS elevates or depresses the gun tube to obtain immediate crest. COS brings the cursor box to the Right limit and presses SELECT then COS traverses the gun tube to the Right limit while the GUNNER sights through the gun tube. COS elevates gun tube upon the COMMAND "Elevate" from the GUNNER when the GUNNER needs to clear an obstruction until the COS reaches the Right limit while monitoring the Azimuth readout, then presses ENTER. Before moving the gun tube, COS then cursors to the entry under EL, presses SELECT and ENT to obtain elevation to immediate Crest. COS then cursors to entry under Range, presses SELECT and ENT and inputs RANGE TO CREST from the numeric keypad and presses ENT. Upon completion of One Line SITE DATA the COS then presses USE ALL to input MIN QE.

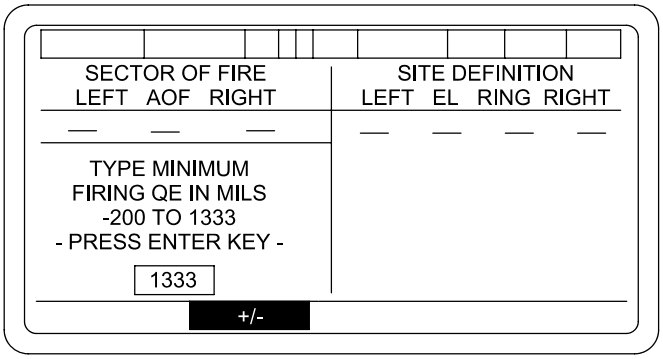


06pc215ta

Pressing the ENTER key will display SECTION IN ORDER menu. During NORMAL OPERATIONS the last value entered shall be displayed.

d. MINIMUM QUADRANT ENTRY. Upon completion of One Line SITE DATA, press USE ALL and a display will appear in the left side of the SITE DEFINITION screen. Enter the MIN QE obtained from the POC for the current position. Upon voice verification of the MIN QE with the POC, press the ENT key. This will display the SECTION IN ORDER at FIRING AREA/POINT screen.

e. Send piece status to POC.

**NOTE**

COS will obtain MAX QE and send updated piece status to POC (see para N-8.7.3).

N-7.2.2.1 SITE DEFINITION screen display. With the GUNNER sighting through the tube the COS elevates or depresses the gun tube to obtain immediate Crest. COS traverses right while the GUNNER looks through the gun tube. When an obstruction appears, data for the Left limit SITE DEFINITION can be entered by pressing the ENT key. The SITE DEFINITION screen with Left Azimuth will be displayed. Perform steps d and e to establish 6400 mils SITE DEFINITION.

**NOTE**

This procedure is conducted as part of Position Improvement.

# N-7 AFCS TRAVEL MODE - CONTINUED

## N-7.2 Emplacement Fire Point/Fire Area - Continued

N-7.2.2 Site Data - Continued

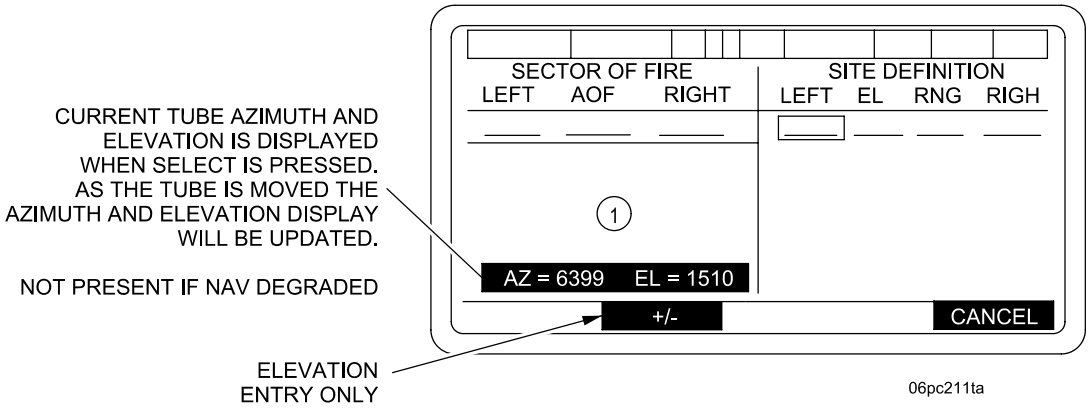


(1) THE FOLLOWING PROMPTS ARE DISPLAYED DEPENDING ON WHICH FIELD IS SELECTED:

| | |
|---|---|
| **WHEN "LEFT" IS SELECTED**<br>MOVE TUBE OR TYPE<br>LEFT EDGE OF SITE<br>IN MILS:<br>0 TO 6399<br>-PRESS ENT KEY- | **WHEN "EL" IS SELECTED**<br>MOVE TUBE OR TYPE<br>ELEVATION OF SITE<br>IN MILS:<br>-200 TO 1333<br>-PRESS ENT KEY- |
| **WHEN "RNG" IS SELECTED**<br>TYPE RANGE TO SITE<br>IN METERS:<br>1 TO 9999<br>-PRESS ENT KEY- | **WHEN "RIGHT" IS SELECTED**<br>MOVE TUBE OR TYPE<br>RIGHT EDGE OF SITE<br>IN MILS:<br>0 TO 6399<br>-PRESS ENT KEY- |

**NOTE: MASK HEIGHT CANNOT EXCEED 10,000 METERS, THEREFORE:**

(A) UPPER LIMIT ON RANGE WILL CHANGE DEPENDING ON CURRENT MASK ELEVATION

(B) UPPER LIMIT ON ELEVATION WILL CHANGE DEPENDING ON CURRENT MASK RANGE

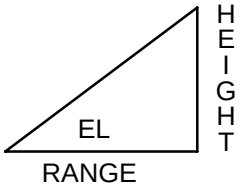


**NOTE: WHEN CURRENT TUBE POSITION IS USED TO SET MASK ELEVATION:**
IF THE RANGE FIELD CONTAINS AN ENTRY WHICH RESULTS IN A MASK EXCEEDING 10,000 METERS, THE RANGE FIELD WILL BE RESET TO THE MAXIMUM ALLOWED VALUE AND THE FOLLOWING MESSAGE WILL BE DISPLAYED: **"WARNING - RANGE SET TO MAXIMUM", "ACK"**

Automatic selection boxing will occur starting from field LEFT and then continuing from LEFT to RIGHT, to field EL, RNG, and RIGHT, after each previous entry has been ENTERED.

# N-7 AFCS TRAVEL MODE - CONTINUED

## N-7.2 Emplacement Fire Point/Fire Area - Continued

N-7.2.2 Site Data - Continued

a. Select column (LEFT) to display left limit SITE DEFINITION screen. Data for this limit can be typed in, or use tube position. Enter data by pressing ENT key.

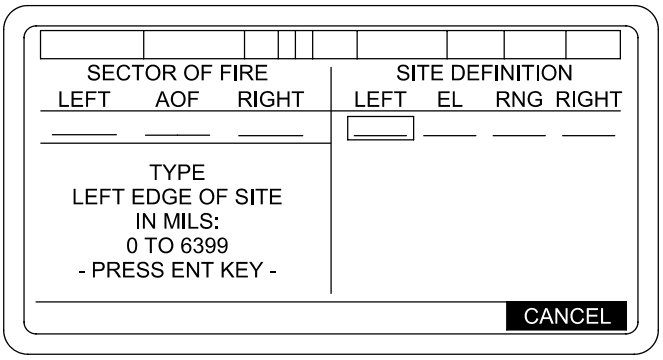


06pc329t

**NOTE**

- Numerical value must be entered before sign. Default sign is (+).
- Upper limit on elevation will change depending on current mask range. If range is blank, default shall be 1333.

b. Select next limit column (EL) to display Elevation SITE DEFINITION screen. Enter elevation data in the same manner as left limit (type in data or use gun tube position). If elevation is below zero, press +/- key to place minus sign in front of numbers to be entered (used only when typing in data). Press ENT key.

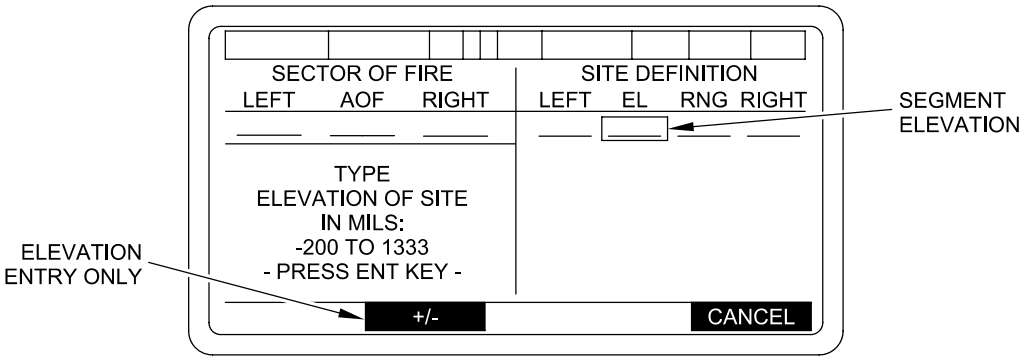


06pc330ta

**NOTE**

Upper limit on elevation will change depending on current mask elevation. If elevation is blank, default shall be 9999.

# N-7 AFCS TRAVEL MODE - CONTINUED

## N-7.2 Emplacement Fire Point/Fire Area - Continued

N-7.2.2 Site Data - Continued

c. Select next limit column (RNG) to display the Range SITE DEFINITION screen. Enter range to crest and press ENT key. (Data for this must be typed in; gun tube position cannot be used.)

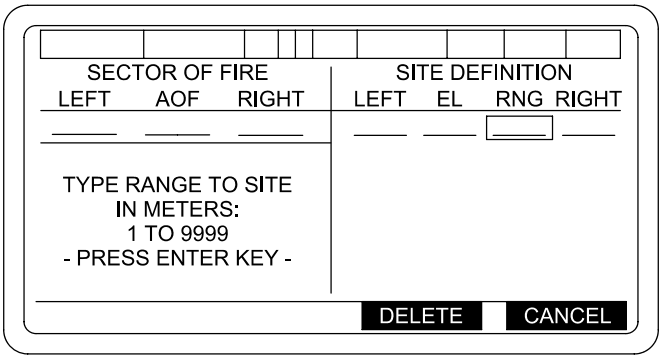


06pc334t

d. Select next limit column (RIGHT) to display the right limit SITE DEFINITION screen. Data for this limit can be typed in, or use tube position. Enter data by pressing ENT key.

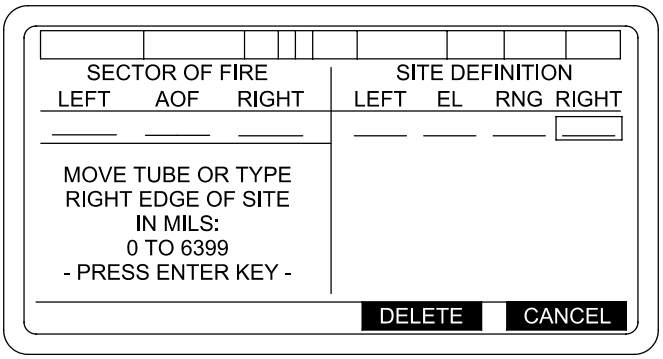


06pc335t

e. Using arrow key, move cursor box to next available line and to the left and identify next obstruction.

f. Sequence can be repeated as many as seven times if needed.

N-7.2.3 Section In Order. When all data is correct, press ENTER key. This will bring up a SECTION IN ORDER WITHIN FIRE AREA or SECTION IN ORDER AT FIRE POINT screen depending on whether the Move Order was a move to a FIRE AREA or FIRE POINT. An ordered move of any other type would be indicated as such in field 11 of the menu.

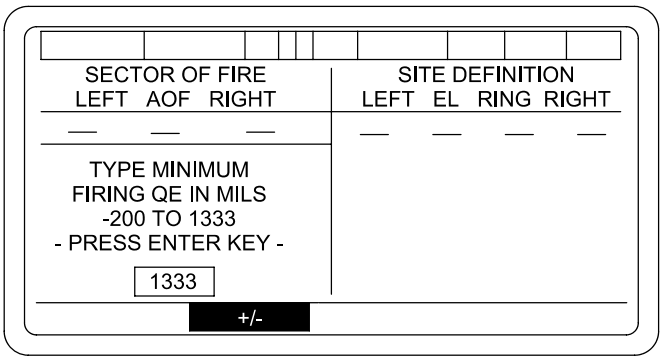


06pc215ta

# N-7 AFCS TRAVEL MODE - CONTINUED

## N-7.2 Emplacement Fire Point/Fire Area - Continued

N-7.2.3 Section In Order - Continued

### NOTE

- See Table N-4 in Section N-4 (AFCS Operating Controls and Indicators) for instructions and warnings which could appear on the SECTION IN ORDER display.
- When SECTION IN ORDER screen is displayed, the commanded deflection (CMD DEFL) may be either: 1) the Azimuth of Fire (Azimuth of LAY) from the Move Order, expressed at 3200 deflection. Since this is also the “Base Azimuth” position (the difference between the 3200 reference and the ordered Azimuth of LAY); or 2) if a Final Protective Fire (FPF) or Priority (PRI) target has been designated by the POC, the CMD DEFL will be the deflection from “Base Azimuth” to the FPF; or 3) when a Manual Move Order has been done, the CMD DEFL is the default Azimuth of Fire (Base Azimuth) entered upon initialization.
- LOAD/LAY and STOW will not be displayed unless the gun switch is in the ON position.

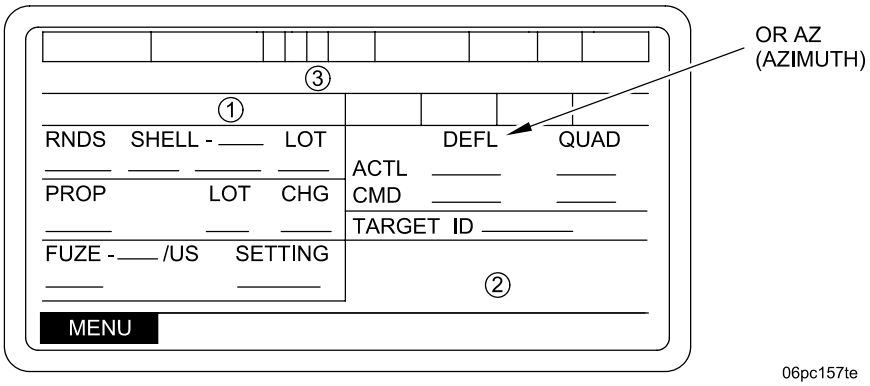


Listed below are the legal values for each field of the SECTION IN ORDER display:

RNDS = Number of rounds remaining to fire 0..999 or blank
SHELL = Shell model only (see Table N-6) or blank
SHELL LOT = A..Z or blank
PROP = Propellant model (see Table N-6) or blank
PROP LOT = A..Z or blank
PROP CHG = Propellant charge designator (see Table N-6) or blank
FUZE = Fuze model only (see Table N-6) or blank
FUZE SETTING = Computed fuze setting, “PD” or “DELAY”
DEFL (or AZ) = 0.0..6399.9 mils
QUAD = -200.0..+1600.0 mils
TARGET ID = FPF/PRI target identification if a target exists; otherwise blank

# N-7 AFCS TRAVEL MODE - CONTINUED

## N-7.2 Emplacement Fire Point/Fire Area - Continued

N-7.2.3 Section In Order - Continued

See Table N-4 in Section N-4 (AFCS Operating Controls and Indicators) for instructions and warnings which could appear on the SECTION IN ORDER display.

N-7.2.4 Establish Distant Aiming Point or Set Collimator Per Unit SOP.

**NOTE**

If time permits, the crew should set out collimator or select a DAP and set the PANTEL with the tube "Base Azimuth". If this is not possible immediately, traverse back to "Base Azimuth" using one of the following procedures based on the conditions indicated on the SECTION IN ORDER screen.

a. Use this procedure when the CMD DEFL reads 3200 deflection and there is no FPF nor PRIORITY (PRI) target displayed on the SECTION IN ORDER screen. Under these conditions, CMD DEFL is using the Azimuth of Fire (Base Azimuth). To move the tube to Base Azimuth, 1) Turn on hydraulic power, 2) Set GUN SERVO switch to ON, and 3) Press/hold the LOAD key until the LOAD indicator is highlighted in the upper right corner of the screen. Tube is now laid on Azimuth of Fire (Base Azimuth) and both the ACTL DEFL and CMD DEFL should read 3200. 4) Sight onto the Collimator or the DAP and set 3200 Deflection on the PANTEL.

b. Use this procedure when the CMD DEFL shows a deflection other than 3200 and there is either an FPF or PRIORITY (PRI) target displayed on the SECTION IN ORDER screen. The CMD DEFL is the Firing Azimuth for the FPF/PRI target, so the LOAD key cannot be used to move the tube to 3200 deflection. Under these conditions, 1) use the Hydraulic Power Handle Controls to traverse the tube until the ACTL DEFL reads 3200 deflection. Tube is now laid on Center of Sector (Base Azimuth). 2) Sight onto the Collimator or the DAP and set 3200 Deflection on the PANTEL.

**NOTE**

If the AFCS fails, use the Azimuth of Fire recorded during emplacement as Azimuth of Lay (Base Azimuth) and use reciprocal lay procedures with the aid of an operational howitzer.

N-7.2.5 Final Laying of Gun Tube at FIRING AREA. It is necessary to lay the gun tube on the Azimuth of Fire (from MOVE ORDER) or the FPF/PRI azimuth/deflection. The SECTION IN ORDER screen will show a difference between the ACTL DEFL and the CMD DEFL. The ACTL and CMD values must be the same for the gun tube to be layed. To accomplish this: 1) set GUN SERVO switch to ON, and 2) depress and hold LOAD key (para N-4). The gun will traverse to the CMD DEFL (match ACTL and CMD) and to the LOAD ELEVATION stored at initialization. When the LOAD indicator is highlighted, release the LOAD key.

## N-8 AFCS FIRE MISSION.

Fire missions are usually generated as a result of a message from the FDC to the AFCS. Included in the message are target location, method of control, and ammunition to fire (if ammunition is not specified the AFCS will default to its own selection). When the message is received by the AFCS, a FIRE MISSION display is displayed on the DU and an audible alert is sounded through the intercom system. The Ballistics Computer will then compute the ballistics (azimuth and quadrant), based on ammunition data (projectile, propellant, and fuze), target location and the location of the howitzer (provided by the navigation system). The ballistic solution is then displayed on the FIRE MISSION display.

A typical FIRE MISSION display contains the following:

**WARNING**

**The crew compartment must be adequately ventilated during all firing using the LEAD PARTICULATE FILTER or ventilation system in accordance with para 2-22.2.**

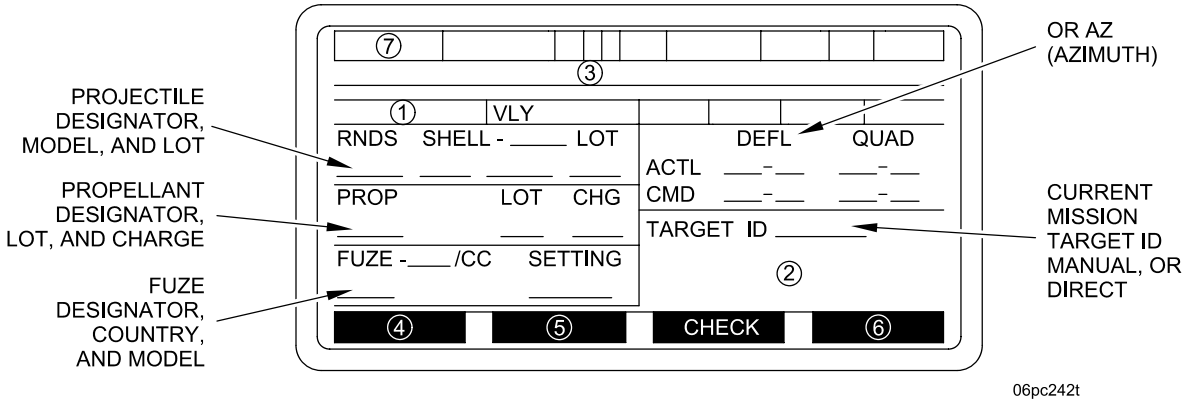


Listed below are the legal values for each field of FIRE MISSION display.

**NOTE**

The 1/1, 1/2, and 2/2 data shall not be displayed for direct or FDC Fire Command fire missions.

VLY / = current volley being displayed: 1/1, 1/2 or 2/2
RNDS = Number of rounds remaining to fire 1..99 or blank
SHELL = Shell model only (see Table N-6) or blank
SHELL LOT = A..Z or blank
PROP = Propellant model (see Table N-6) or blank
PROP LOT = A..Z or blank
CHG = Propellant charge designator (see Table N-5) or blank
FUZE = Fuze model only (see Table N-6) or blank
FUZE SETTING = Computed fuze setting, “PD” or “DELAY”
DEFL or AZ = 0.0..6399.9 mils or blank
QUAD = −200.0..+1600.0 mils or blank
TARGET ID = Current mission target identification

## N-8 AFCS FIRE MISSION - CONTINUED

Instructions and warnings which could appear on the FIRE MISSION display:

See Table N-2 in Section N-4 (AFCS Operating Controls and Indicators) for instructions and warnings which could appear on the FIRE MISSION display.

The following alerts shall appear if the operator presses the LOAD or LAY keys and the tube transitions across the minimum quadrant elevation:

MINIMUM QE VIOLATED ACK

The Gun Tube has violated the minimum QE as entered by the AFCS operator in the Enter Minimum Firing QE Display. A type 2 audio alert will sound until the ACK key is pressed.

MINIMUM QE NO LONGER VIOLATED ACK

The Gun Tube no longer violates the minimum QE as entered by the AFCS operator in the Enter Minimum Firing QE Display. A type 2 audio alert will sound until the ACK key is pressed.

Fire Mission Received. When displayed, press ACK to confirm receipt of fire mission.

# N-8 AFCS FIRE MISSION - CONTINUED

## N-8.1 Platoon Operation Center.

Although the howitzer has the ability to compute its own firing data, the actual firing of a mission is controlled by the POC. The control method is included within the fire mission message and displayed on the FIRE MISSION screen. Control methods are as follows:

a. AT MY COMMAND. In this method, the POC controls when the howitzer is fired. (An example is a normal Copperhead mission.) The Method of Control field of the FIRE MISSION screen will tell the COS to LOAD, LAY, then press READY key. When these are accomplished, a message that the howitzer is ready to fire is sent to the POC. When the FIRE COMMAND is issued by the POC, an audible alert and an alternating tone is sounded and a FIRE prompt is displayed. If more than one volley is to be fired, the other volleys will be FIRE WHEN READY.

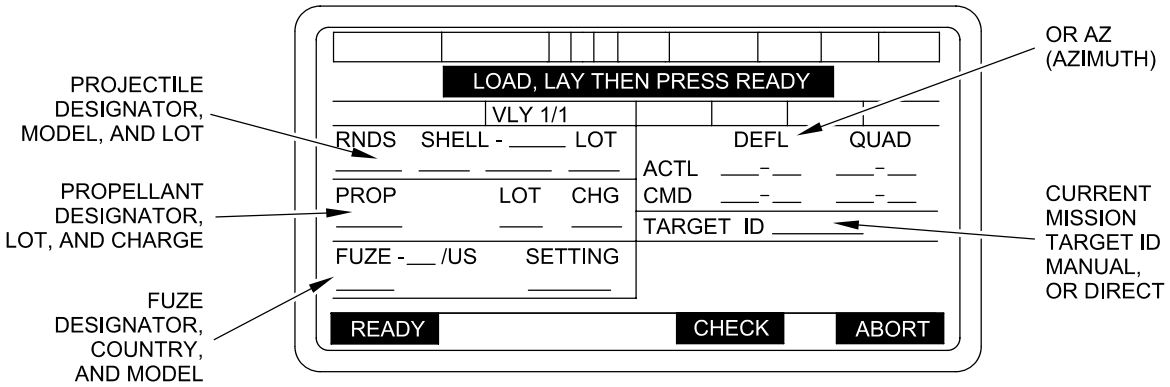


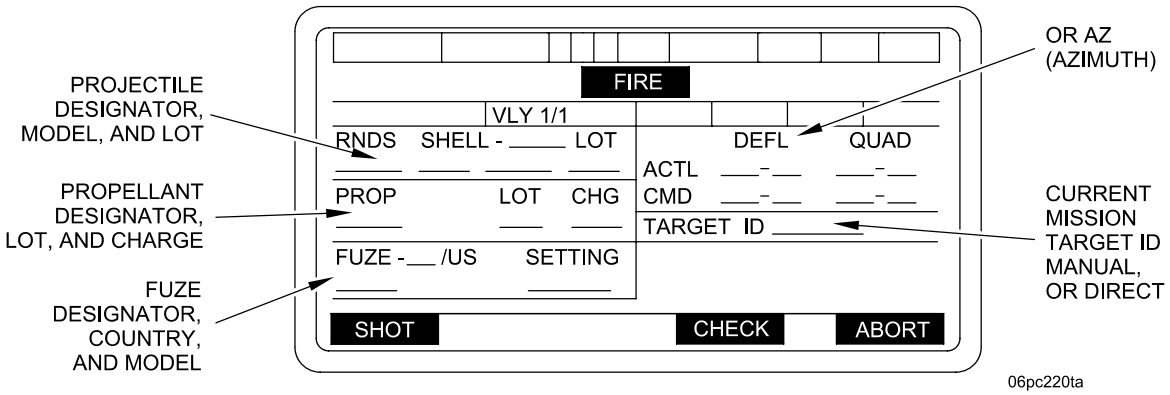

# N-8 AFCS FIRE MISSION - CONTINUED

## N-8.1 Platoon Operation Center - Continued

b. DO NOT LOAD. This is a restrictive command that prohibits loading and firing. This is used when it is anticipated that significant time will elapse between loading and firing. When the DO NOT LOAD command is canceled, then the FIRE command is issued, and the same audible and visual alerts will be received as in AT MY COMMAND.

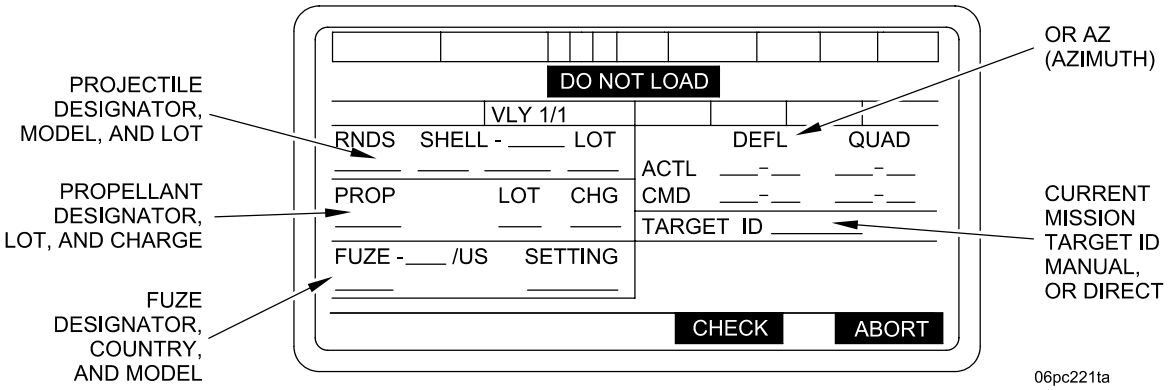


c. TIME TO FIRE (TTF) SEQUENCE. This sequence consists of the following:

(1) Ballistic sequencing is performed. (COMPUTING DO NOT LOAD)

(2) If no ABORT is performed during the ballistic sequencing the AFCS operator is given the data.

(3) The AFCS operator is told to “WAIT FOR XXXX SECONDS” where xxx is the number of seconds remaining until time to fire.

(4) The “WAIT FOR XXX SECONDS” prompt is updated each second.

(5) When the countdown has expired, the AFCS operator is told to “FIRE”.

(6) If this is not a FPF mission, then when the first shot out is detected and there is a Continuous Fire Interval specified processing continues using the Continuous Fire Interval sequence. If there are more rounds to fire, and a Continuous Fire Interval is not specified, the AFCS operator is told to “FIRE WHEN READY” (similar to when ready sequencing subsequent rounds). Otherwise, if shot out is not detected within 20 seconds then the mission is automatically ended.

If this is a FPF mission, then when shot out is detected the AFCS operator is told to “FIRE WHEN READY” again. This is repeated until the mission is ended and no rounds complete is generated.

(7) When rounds complete is detected the mission is automatically ended.

# N-8 AFCS FIRE MISSION - CONTINUED

## N-8.1 Platoon Operation Center - Continued

d. CONTINUOUS FIRE INTERVAL SEQUENCE. The Continuous Fire Interval sequence shall be as follows for the second and subsequent rounds in a mission where a continuous fire interval is specified.

(1) Following the first round fired using the sequences described above, the operator shall be told to "WAIT FOR XXX SECONDS" where xxx is the number of seconds remaining until time to fire.

(2) The "WAIT FOR XXX SECONDS" prompt shall be updated each second.

(3) When the countdown has expired, the operator is told to "FIRE".

(4) If all rounds in the mission have not been shot, processing will sequence through steps 1, 2, and 3 above.

(5) When rounds complete is detected, the mission is automatically ended.

## N-8.2 Firing Mission.

**WARNING**

**The crew compartment must be adequately ventilated during all firing using the LEAD PARTICULATE FILTER or ventilation system in accordance with para 2-22.2.**

**WARNING**

**LEAD PARTICULATE AND FUMES HAZARD**

- The adverse effects associated with exposure of lead range from acute to relatively mild. The symptoms of severe lead intoxication include loss of appetite, metallic taste, constipation, nausea, pallor, excessive tiredness, weakness, insomnia, headache, nervous irritability, muscle and joint pains, fine tremors, numbness, dizziness, hyperactivity, and colic.
- The following precautions must be observed to ensure safety of personnel during routine and combat conditions.
- **BE ALERT** during all firing missions for exposure symptoms. If symptoms of lead intoxication are suspected, **IMMEDIATELY** ventilate vehicle. If symptoms persist, remove affected personnel from vehicle and treat as follows: Expose to fresh air, keep warm, do not permit physical exercise. (Consult FM 4-25.11, "First Aid for Soldiers", for additional instruction.) A physician should be consulted within 24 hours.

# N-8 AFCS FIRE MISSION - CONTINUED

## N-8.2 Firing Mission - Continued

**WARNING**

Individual exposure shall be limited to a maximum firing dosage of 13 M119 charges or six M203 charges per 24 hour period. If firing dosage will exceed these limits, MCS operation with the M25A1 face mask is required.

When a fire mission is received, visual as well as an audible alert is given. The visual alerts are FIREMSN in Field 2 and OPERATOR ALERT AND ACK display. The audible alert can be heard by all crewmembers. When a fire mission is in process, each crewmember will perform his portion of the following:

a. GUNNER and CANNONEER stow seats (if not previously stowed).

b. Driver starts engine and/or raises idle speed to 1000-1200 rpm.

c. COS issues the fire order (for example, 1 round HE; charge 4 green bag; Fuze Time, Time 25.0) and activates the HYDRAULIC POWER switch on the hydraulic control box and the GUN SERVO switch on the DU.

d. Cannoneer turns LEAD FILTER switch on the Accessory Control Box to ON and moves Vent Duct Control Handle into UP position.

e. GUNNER opens breech (first round only).

f. CANNONEER positions rammer to RAM position.

g. GUNNER prepares propellant (charge/zone taken from bustle stowage).

h. CANNONEER prepares projectile and fuze (sets time on fuze if necessary).

i. COS verifies projectile, fuze, fuze time and propellant and depresses LOAD key on DU (if necessary).

j. When the tube is in the LOAD position, the CANNONEER places the projectile on the ram tray and activates rammer.

k. When the ramming cycle is complete, the CANNONEER places the rammer in the stowed position.

l. GUNNER places propellant in powder chamber and closes breech.

**NOTE**

When the AFCS has laid the gun and the LAY key is highlighted the gun must stay within +/- 0.9 mils of the commanded deflection.

m. The COS presses and holds the LAY key on the DU until the cannon is laid on the COMMAND FIRING Data.

n. COS ensures that the gun is in the LAY position by verifying and announcing LAY light is highlighted (ACTUAL and COMMANDED DEFLECTION) and QUADRANT are within tolerance (+/- 0.9) and the prompt “WARNING TUBE IS NOT IN LAY POSITION” is no longer displayed).

o. GUNNER verifies LAY data. If data is correct GUNNER will announce “Verified”. (If data is incorrect GUNNER will announce “Check firing”).

p. COS gives the command to PRIME.

# N-8 AFCS FIRE MISSION - CONTINUED

## N-8.2 Firing Mission - Continued

**NOTE**

During high angle missions or illumination missions, it is recommended prime be done at load elevation.

q. COS commands “Hookup”, CANNONEER attaches lanyard to firing block and announces “Hookup”,

r. COS announces, “FIRE”.

**NOTE**

If the Navigation Subsystem or MVS are out, the AFCS will not detect the shot, and COS must press the SHOT softkey after each round.

s. CANNONEER pulls the lanyard to fire the round.

t. The AFCS is capable of automatically detecting Shot. In most cases pressing the SHOT softkey is not required. When a round is fired, the Navigation Subsystem and MVS will detect the round. After the round is fired and detected by the AFCS, the SHOT softkey will automatically disappear for 5 seconds, the Fire Mission will automatically decrement by one round (i.e. rounds to complete mission will decrease by one), and the Ammo Inventory will automatically be adjusted. In the very rare case that the AFCS does not detect shot, the COS must press the SHOT softkey as before.

u. Cannoneer turns on Personnel Fan (Exhaust) switch on the Accessory Control Box and moves the Vent Duct Control Handle into DOWN position. Operate Personnel Fan for 1-2 minutes until all fumes are exhausted.

N-8.2.1 Subsequent Rounds. The first procedure is also used for all subsequent rounds in a fire mission. When all rounds have been fired for the mission, a VERIFY EXPENDED AMMO screen will be displayed. Ammunition accountability is covered in para N-8.3.

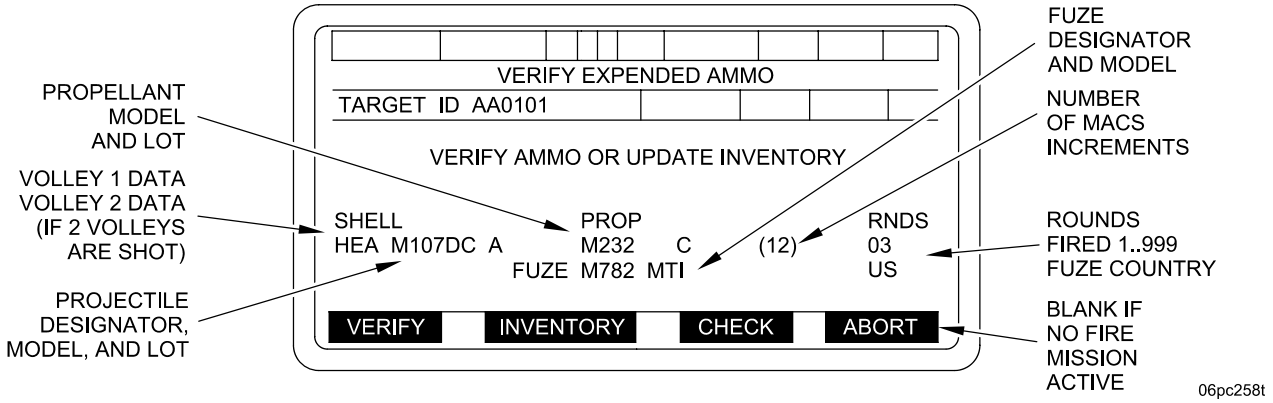

# N-8 AFCS FIRE MISSION - CONTINUED

## N-8.3 Ammunition Accountability.

### NOTE

- If a shell, fuze or propellant is entered in the AFCS inventory, but the quantity is insufficient for the mission, or zero, the AFCS will prompt the Chief of Section to accept or reject the mission (in case a new load of ammunition just arrived and has not been entered into inventory yet).
- If a fire mission is activated while you are in any of the inventory management menus, all completed entries will be saved automatically.

It is essential that accurate ammunition updates to the AFCS be done in order to be able to fire all missions received. This should be done after a mission is fired. When all rounds in a mission have been fired, a VERIFY EXPENDED AMMO screen is displayed. This screen asks the operator either to verify ammunition fired or to update the ammo inventory. This is accomplished as follows:

a. If the ammunition shown in the lower part of the VERIFY EXPENDED AMMO screen is an accurate account of the ammunition fired, press VERIFY key, to update the ammunition count. This updates the AFCS ammunition count automatically.

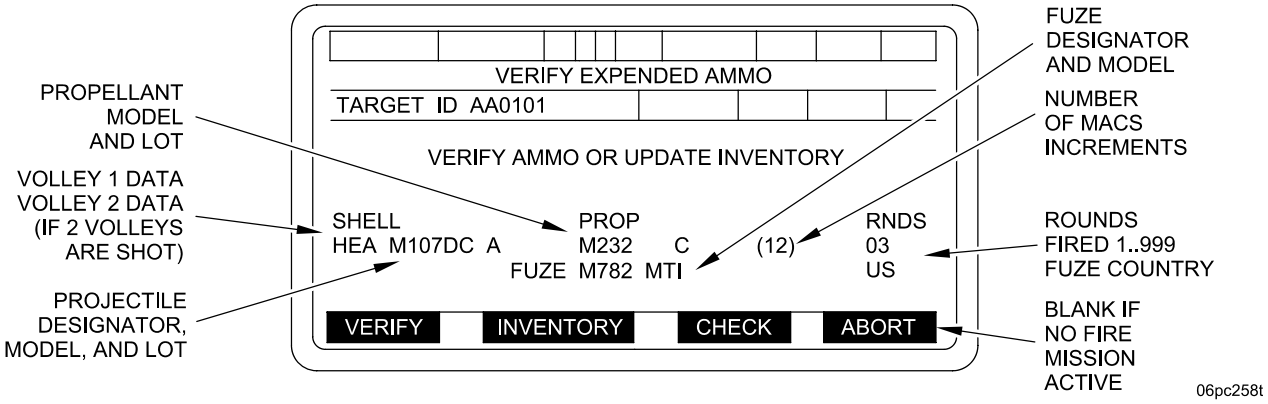

# N-8 AFCS FIRE MISSION - CONTINUED

## N-8.3 Ammunition Accountability - Continued

b. If the ammunition shown on the VERIFY EXPENDED AMMO screen is not an accurate account of ammunition fired (for example, a compatible fuze was used as a substitute for the fuze specified in the mission), press the INVENTORY key. This causes an INVENTORY MANAGEMENT screen to be displayed.

**NOTE**

- When INVENTORY key is pressed, SHELL, PROP and FUZE must be updated.
- The message "INVENTORY UPDATE REQUIRED" only appears if the screen is entered after a fire mission and the operator has not verified the ammo from the previous fire mission, or if a direct or manual mission was performed.

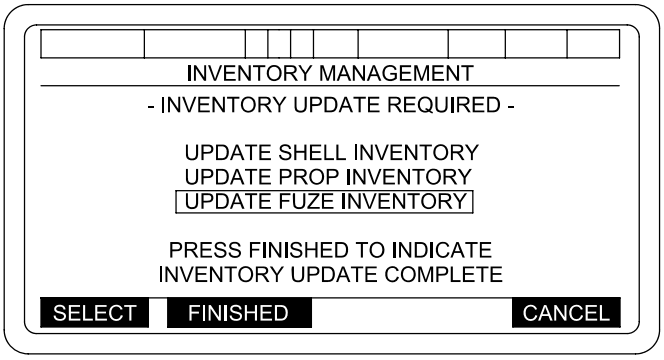


06pc172ma

c. This will allow the operator to manually input the type of round actually fired and correct the ammo inventory.

d. If FINISHED is pressed at this point, the operator will be returned to a ROUND COMPLETE screen and none of the ammo from that fire mission will be subtracted from the inventory.

# N-8 AFCS FIRE MISSION - CONTINUED

## N-8.4 End of Mission.

Notification that a Fire Mission has ended is sent by an END OF MISSION (EOM) message from the POC. Normally, this is done when all rounds requested in a Fire Mission have been fired. When all the rounds for a mission have been fired, a ROUNDS COMPLETE OR MISSION PAUSED, AWAITING EOM OR CONTINUATION OF MISSION screen will be displayed until an EOM message is sent from the POC. When the EOM message is received by the AFCS, an END OF MISSION screen is displayed.

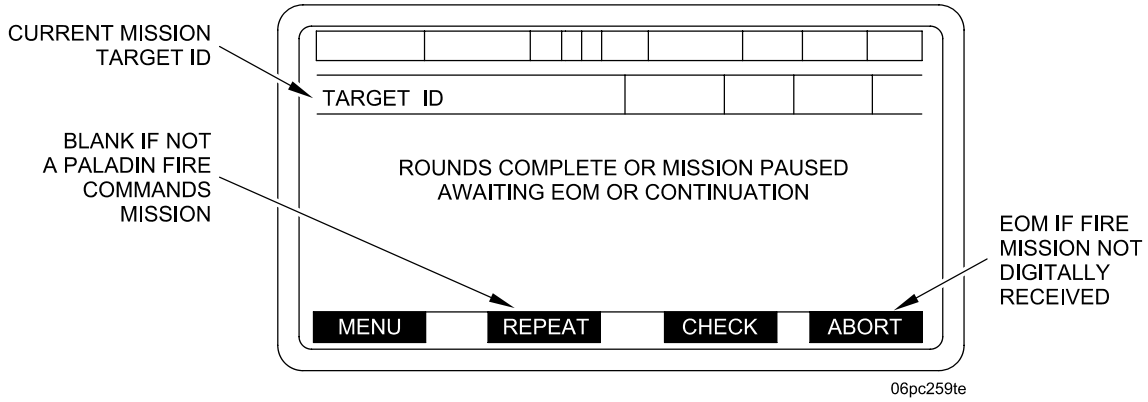


**CAUTION**

Operate Personnel Fan (Exhaust) switch on the Accessory Control Box with the Vent Duct Control Handle in DOWN position for 2 minutes when crew members observe fumes, smoke or indication of carbon monoxide build up in the crew compartment.

**NOTE**

- While awaiting EOM or continuation of a mission, you can access the SETUP AND INFORMATION menus by pressing the MENU key (e.g. to update inventory to add new ammo received). The AFCS will automatically interrupt whatever you are doing if the fire mission is continued.
- See Table N-4 in Section N-4 (PDFCS Operating Controls and Indicators) for instructions and warnings which could appear on the SECTION IN ORDER display.

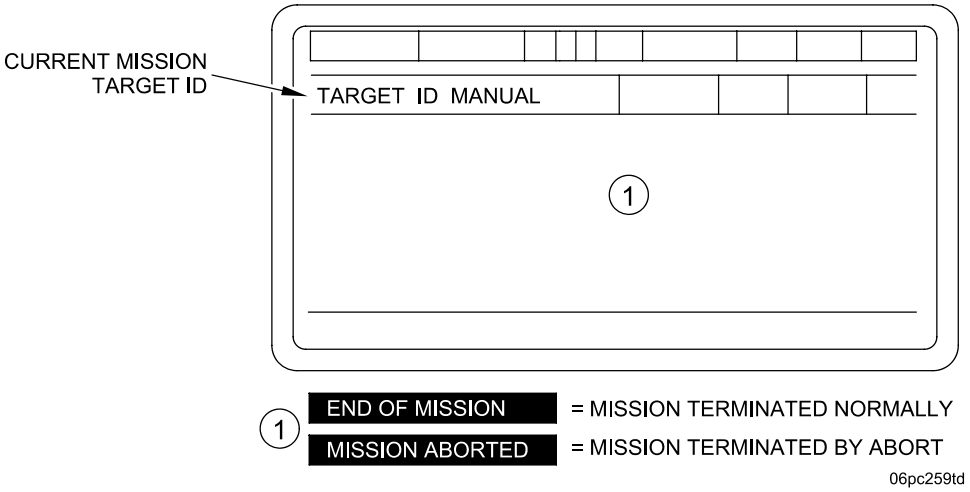

# N-8 AFCS FIRE MISSION - CONTINUED

## N-8.5 AFCS Emergency Mission.

Because the M109A6 makes frequent tactical and survivability moves, receiving a Fire Mission while moving will become a routine event. During a move, a Fire Mission order may be sent requiring the individual howitzer to stop, emplace, and fire on a target at any time. When this type of order is sent, an audible alert and a visible alert in the form “FIREMSN RECEIVED” “ACK” in field 16 is displayed to the operator.

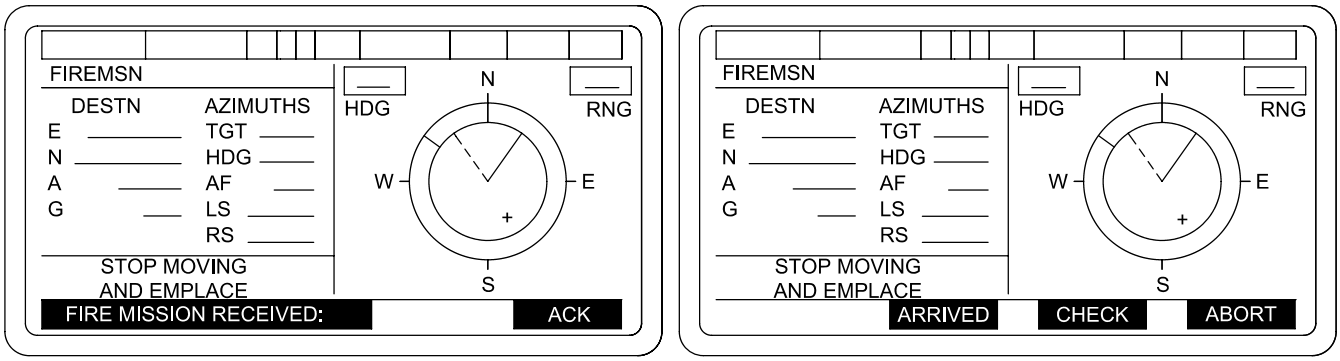


06pc274ta

N-8.5.1 Emplace.

The chief of section must ACK the mission and select a suitable firing position as quickly as possible. Depress ARRIVED softkey to receive the Fire Mission. Fire Mission data will be computed and displayed.

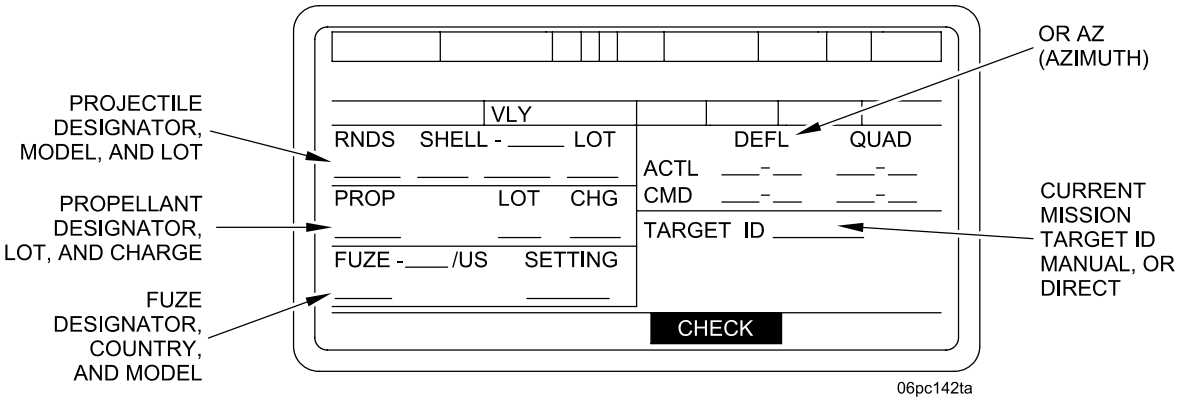


06pc142ta

# N-8 AFCS FIRE MISSION - CONTINUED

## N-8.5 AFCS Emergency Mission - Continued

N-8.5.2 Ready Gun.

a. Set HYDRAULIC POWER switch on hydraulic control box and GUN SERVO switch on DU to ON.

b. Release gun tube from travel lock.

c. Release cab traverse lock.

N-8.5.3 LAY, LOAD, LAY, AND FIRE.

**NOTE**

Ballistic computations must have been completed before LAY key is depressed.

a. Depress and hold LAY key to bring gun to target Azimuth and LAY elevation. Look thru tube and verify immediate Crest is clear.

b. Depress LOAD key to LAY weapon on COMMANDED deflection and LOAD quadrant.

c. Depress LAY key to LAY weapon on COMMANDED deflection and quadrant. Ensure LAY key is held until LAY indicator is highlighted.

d. On command, fire the gun.

N-8.5.4 End of Mission.

a. When END OF MISSION message is received, wait for instructions to proceed with displacement.

b. After the END OF MISSION message, the MOVE ORDER screen with previous move mission data will be displayed.

c. Turn on Personnel Fan (Exhaust) switch on the Accessory Control Box and move the Vent Duct Control Handle into DOWN position. Operate Personnel Fan for 1-2 minutes until all fumes are exhausted.

d. Proceed to ordered destination.

**CAUTION**

Operate Personnel Fan (Exhaust) switch on the Accessory Control Box with the Vent Duct Control Handle in DOWN position for 2 minutes when crew members observe fumes, smoke or indication of carbon monoxide build up in the crew compartment.

# N-8 AFCS FIRE MISSION - CONTINUED

## N-8.6 Direct Fire Procedures Using AFCS.

**NOTE**

While the AFCS can be used, manual (one man-one sight) procedures have been found to be faster and just as accurate.

For direct fire against close range targets, AFCS can be used to aid in laying the cannon. COS identifies target, states type charge, projectile and fuze to be used, estimates speed (if target is moving) and announces lead to GUNNER. COS continues direct firing procedures until target is destroyed.

a. COS first identifies direct fire target. If target consists of several weapons, he selects target that is the greatest threat to his position.

b. COS gives fire command in the following order:

| ELEMENT | EXAMPLE |
|---|---|
| Target designation | Target, lead tank |
| Target direction | Left/right front |
| Projectile, charge, fuze | Shell HE, charge 7, fuze quick |
| Lead | Lead left/right 10 |
| Method of fire | Fire at will |

**NOTE**

- Fire at will means to keep firing until target is destroyed or another command is given.
- COS will estimate range if he has no accurate range.
- COS will use lead chart mounted in commander's cupola (shown below) for initial lead.

**DIRECT FIRE MOVING TARGET LEAD**

| TARGET SPEED (MPH) | TARGET DIRECTION OF TRAVEL LEAD IN MILS (m) | | |
|---|---|---|---|
| | ↔ | ⤫ | ↕ |
| 5 | 5m | 5m | 0m |
| 10 | 10m | 5m | 0m |
| 15 | 15m | 10m | 0m |
| 20 | 20m | 15m | 0m |
| 25 | 20m | 15m | 0m |
| 30 | 30m | 20m | 0m |

c. On Display Unit COS sets GUN SERVO switch to OFF.

# N-8 AFCS FIRE MISSION - CONTINUED

## N-8.6 Direct Fire Procedures Using AFCS - Continued

d. On hydraulic control box (1), turn HYDRAULIC POWER switch (2) to ON, TRAVERSE MODE switch (3) to POWER, TRAVERSE CONTROL switch (4) to GUNNER, and ELEVATE CONTROL switch (5) to COS.

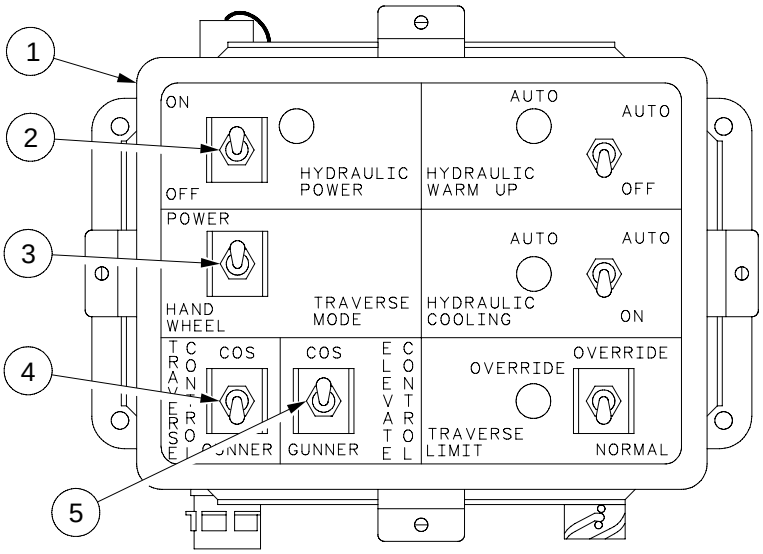


hipc173a

e. Bring up SETUP AND INFORMATION menu on Display Unit.

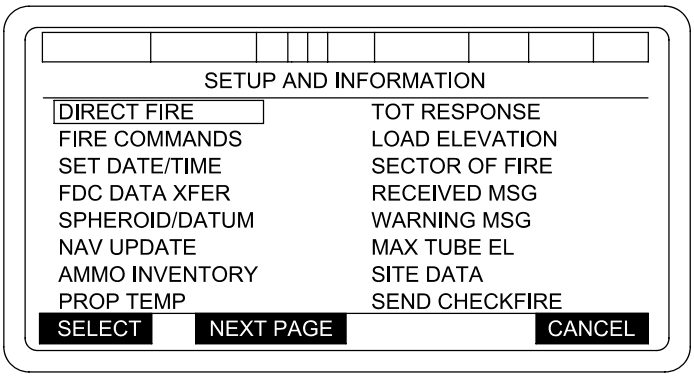


06pc260tb

### NOTE

The NAV update selection shall be available to the AFCS operator at all times except when a fire mission is active or the navigation subsystem is unavailable.

# N-8 AFCS FIRE MISSION - CONTINUED

## N-8.6 Direct Fire Procedures Using AFCS - Continued

f. With cursor (box) at DIRECT FIRE, press softkey located directly beneath SELECT prompt to display a DIRECT FIRE MODE ENTRY menu on DU.

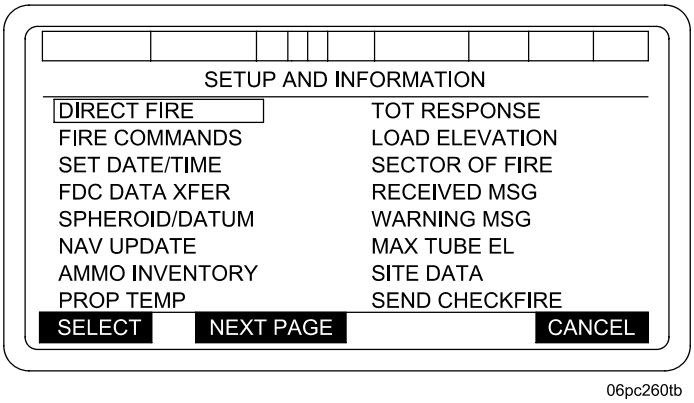


06pc260tb

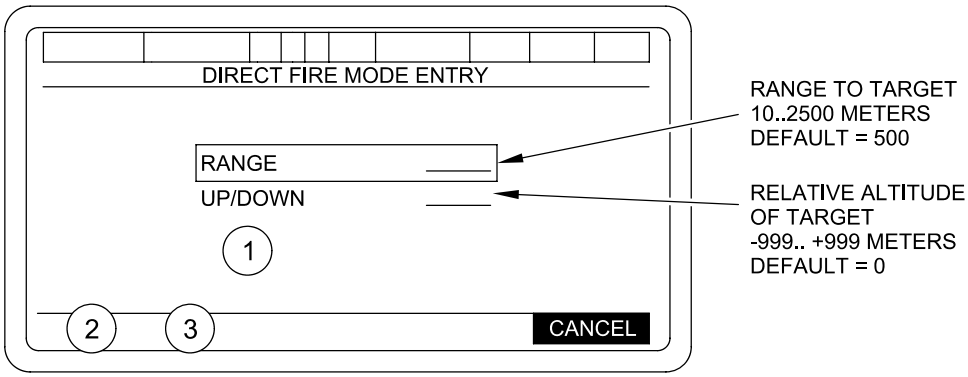


06pc183ma

(1) blank - No selection made
"TYPE VALUE 10 TO 2500 METERS" - RANGE Selected.
"-PRESS ENT KEY-"
"TYPE VALUE -999 TO +999" - UP/DOWN Selected.
"-PRESS ENT KEY-"

(2) blank - If RANGE or UP/DOWN Selected

SELECT -Awaiting Selection or USE ALL. Selects current menu item.

(3) blank - If RANGE Selected

+/- - UP/DOWN Selected. Change sign of value

USE ALL - Awaiting Selection or USE ALL. Initiate direct fire mission.

# N-8 AFCS FIRE MISSION - CONTINUED

## N-8.6 Direct Fire Procedures Using AFCS - Continued

g. Press softkey located directly beneath the USE ALL prompt of the DIRECT FIRE MODE ENTRY menu to display a FIRE MISSION menu.

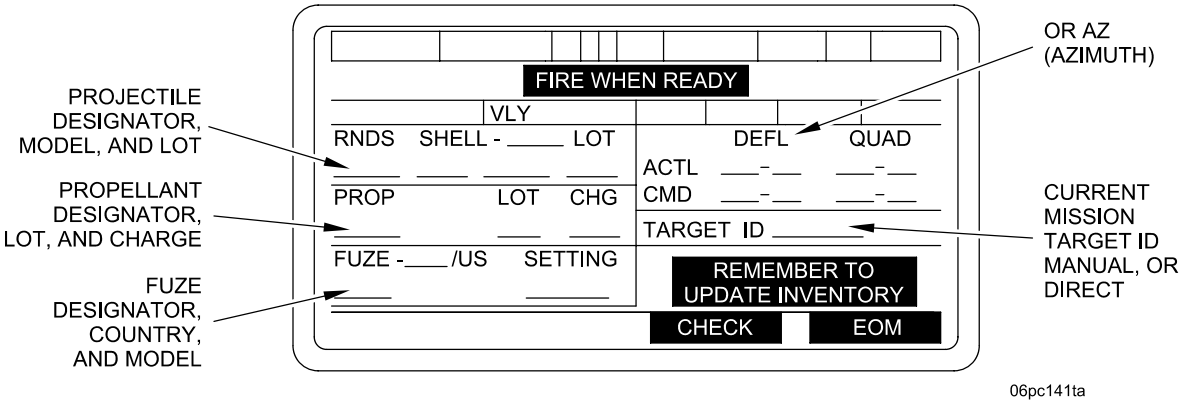


### NOTE

You will only use the ACTL QUAD field of this screen to set tube elevation.

h. Using the DIRECT FIRE RANGE PLATE, the COS determines elevation based on estimated range. Using COS control handle, COS elevates/depresses gun to proper elevation in the ACTL QUAD field of the FIRE MISSION menu, then announces "SET" continually until howitzer is fired.

**DIRECT FIRE RANGE PLATE**
**155MM HOWITZER**

| M549A1 RAP | | M107 HE PROJECTILE | |
|---|---|---|---|
| ROCKET OFF | | M19A1 PC WB | |
| M203 SERIES PC RB | | M119A2 PC RB | |
| RANGE METERS | ELEV MILS | RANGE METERS | ELEV MILS |
| 400 | 3 | 400 | 4 |
| 600 | 5 | 600 | 7 |
| 800 | 6 | 800 | 9 |
| 1000 | 8 | 1000 | 11 |
| 1200 | 9 | 1200 | 14 |
| 1400 | 11 | 1400 | 16 |
| L15 HE PROJECTILE | | M107 HE PROJECTILE | |
| M203 SERIES PC RB | | M4A2 PC WB | |
| RANGE METERS | ELEV MILS | RANGE METERS | ELEV MILS |
| 400 | | 400 | 6 |
| 600 | | 600 | 10 |
| 800 | | 800 | 13 |
| 1000 | | 1000 | 16 |
| 1200 | | 1200 | 20 |
| 1400 | | 1400 | 23 |
| PLATE DIRECT FIRE | | P/N 12910859 | |

# N-8 AFCS FIRE MISSION - CONTINUED

## N-8.6 Direct Fire Procedures Using AFCS - Continued

i. On subsequent rounds, the COS will estimate a new range based on observed effects and repeat step h until target is destroyed or other commands become necessary.

j. GUNNER sets azimuth counter (6) to 3200, and turns direct/indirect fire bar knob (7) to DIRECT position to engage 5.0 mils per click sight mechanism.

**NOTE**

The head of the PANTEL must remain oriented with the gun tube. The PANTEL will be oriented with the gun tube if the azimuth counter reads 3200 and the PANTEL is properly boresighted.

k. If central laying is used, GUNNER applies announced lead to azimuth counter (6). If lead is left, add the lead angle to 3200; if lead is right, subtract the lead angle from 3200. The GUNNER then sights through the eyepiece (8) and traverses tube until vertical hairline (9) of PANTEL centers on the target. If reticle method is used, GUNNER places vertical hairline (10) left or right of target the number of mils lead announced by COS.

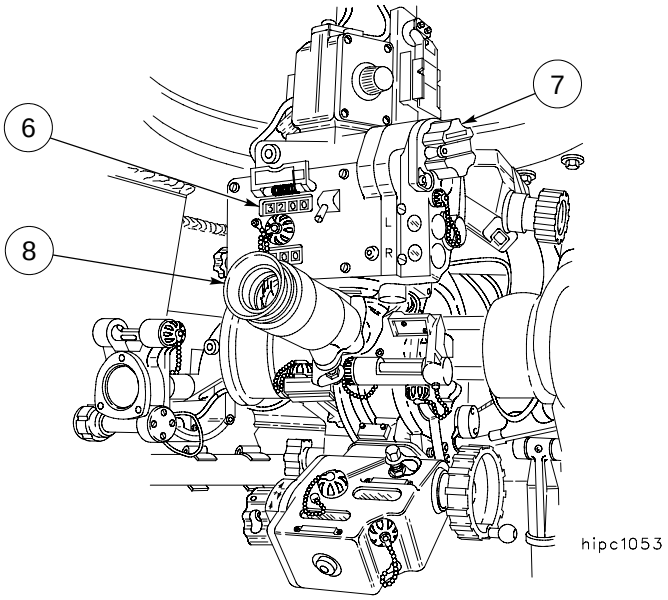


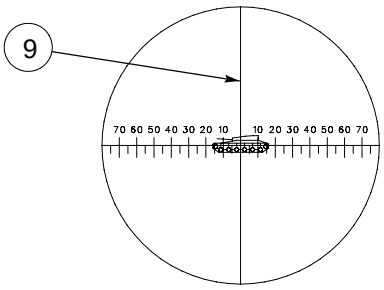


CENTRAL LAYING

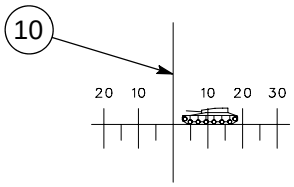


RETICLE METHOD

hipc1057

# N-8 AFCS FIRE MISSION - CONTINUED

## N-8.6 Direct Fire Procedures Using AFCS - Continued

l. When GUNNER establishes correct sight picture, and COS has announced “SET”, GUNNER commands “FIRE”.

m. CANNONEER fires gun.

n. After firing, GUNNER continues to lay on target until it is destroyed or a subsequent fire command is issued.

o. COS gives subsequent fire commands based on observed effects and changes lead as necessary.

| ELEMENT | EXAMPLE |
|---|---|
| Change in Lead | Right/left 5 |

p. GUNNER turns azimuth deflection knob in 5-mil (1-click) increments to set lead change.

## N-8.7 System Menus.

The SETUP AND INFORMATION menu is used to access the various screens to initialize the AFCS and align the Navigation System. It also provides access to menus allowing the operator to enter fire commands and muzzle velocities, access messages, and to monitor AFCS STATUS and tube temperature. The operator can change the display format and intensity, input Manual Move Orders, perform a system update, and access stored targets. The operator can enter a SPHEROID/DATUM; can access the MAINTENANCE MODE MENU; and can update his ammunition inventory. This will complete the capabilities of the system menus.

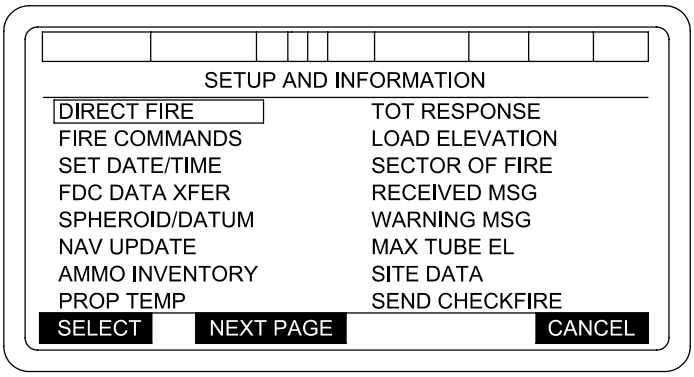


06pc260tb

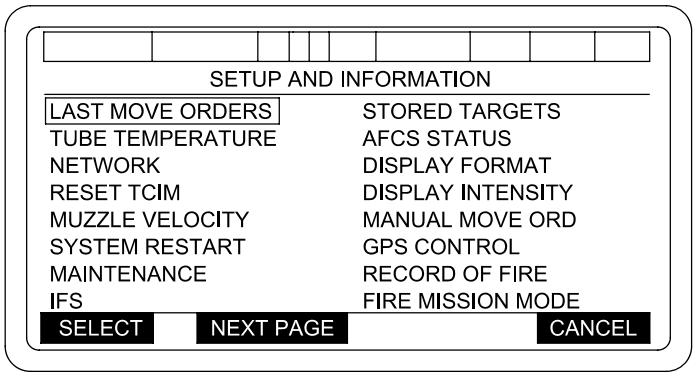


06pc261te

# N-8 AFCS FIRE MISSION - CONTINUED

## N-8.7 System Menus - Continued

N-8.7.1 Fire Commands. Selection of FIRE COMMANDS from the SETUP AND INFORMATION menu will result in display of the FIRE COMMANDS screen. Two options will be shown, FDC FIRE COMMANDS and PALADIN FIRE COMMANDS.

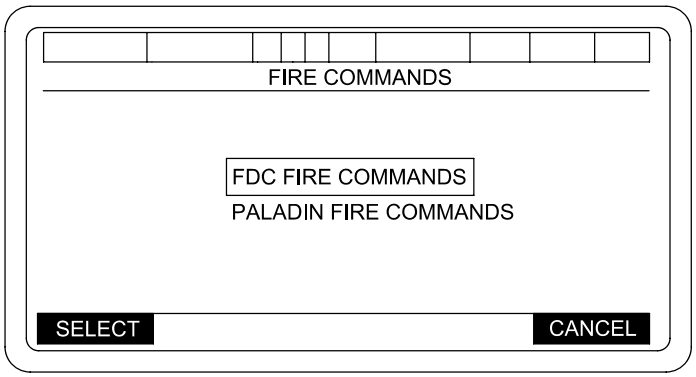


06pc204tc

N-8.7.1.1 FDC FIRE COMMANDS ENTRY screen.

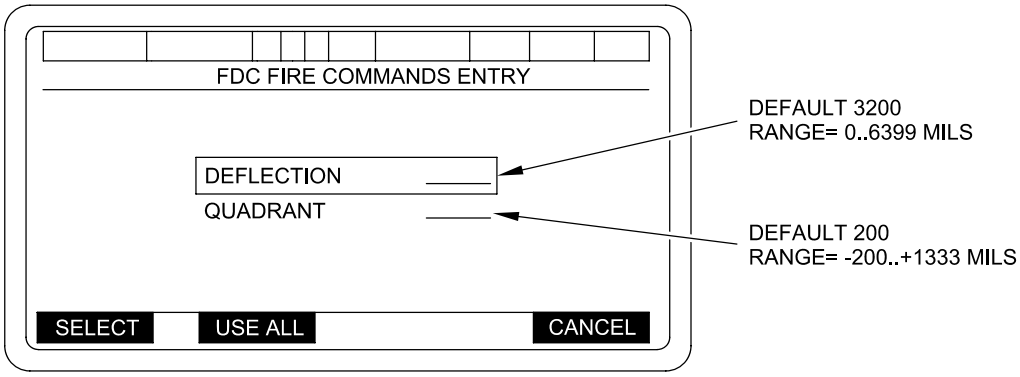


06pc204tb

a. With the FDC FIRE COMMANDS ENTRY screen displayed, box in DEFLECTION; press SELECT key; type in deflection; and press ENT key.

b. Box in QUADRANT and press SELECT key. Type in quadrant and press ENT key.

c. When correct fire command has been entered, press USE ALL key to display a FIRE MISSION screen with firing data in the COMMANDED (CMD) field.

# N-8 AFCS FIRE MISSION - CONTINUED

## N-8.7 System Menus - Continued

N-8.7.1 Fire Commands - Continued

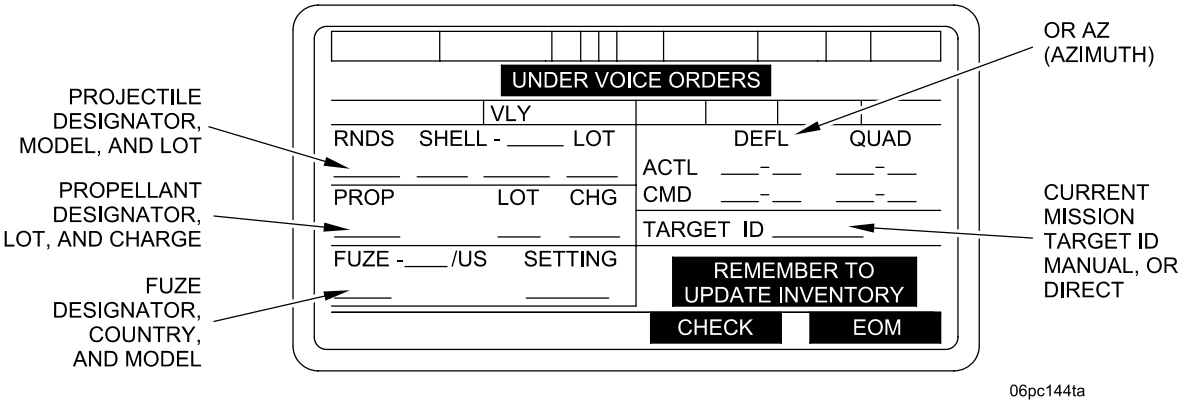


d. The fire mission is fired using normal procedures.

e. When the voice order to end the mission is received, press the EOM key.

f. Ammo accountability is then manually processed (para N-8.3).

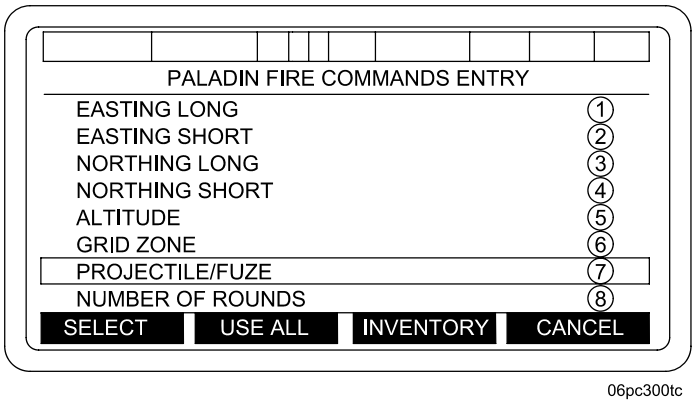


N-8.7.1.2 PALADIN FIRE COMMANDS ENTRY display. If selected, the Paladin will check the current ammunition inventory. If at least one Projectile/Fuze combination is present, the Paladin will display the PALADIN FIRE COMMANDS ENTRY screen.

### NOTE

If no Projectile/Fuze combinations are found, Paladin will display “NO AMMO PRESENT” “ACK”. Pressing ACK will return display to the SETUP AND INFORMATION menu.

# N-8 AFCS FIRE MISSION - CONTINUED

## N-8.7 System Menus - Continued

N-8.7.1 Fire Commands - Continued

**Table N-13. Paladin Fire Commands Entry Display**

| Field | Description | Conditions for display |
|---|---|---|
| 1 | EASTING LONG<br>Range/Values:<br>(1) 0-9<br>Default/Initial value: Paladin's entered location<br>Units: Meters | (1) Defaults to the Paladin's current location.<br>(2) Shall be editable. |
| 2 | EASTING SHORT<br>Range/Values:<br>(1) 0-99999<br>(2) - - - - -<br>Default/Initial value: -----<br>Units: Meters | Note: Easting short fields shall be left justified. If the operator enters at least 1 digit and presses enter, the Paladin shall default remaining digits to the right with zeros.<br>(1) Operator entered.<br>(2) - - - - - |
| 3 | NORTHING LONG<br>Range/Values:<br>(1) 001-100<br>Default/Initial value: Paladin's entered location<br>Units: Meters | (1) Defaults to the Paladin's current location.<br>(2) Shall be editable. |
| 4 | NORTHING SHORT<br>Range/Values:<br>(1) 0-99999<br>(2) - - - - -<br>Default/Initial value: Blank<br>Units: Meters | Note: Northing short fields shall be left justified. If the operator enters at least 1 digit and presses enter, the Paladin shall default remaining digits to the right with zeros.<br>(1) Operator entered.<br>(2) - - - - - |

# N-8 AFCS FIRE MISSION - CONTINUED

## N-8.7 System Menus - Continued

N-8.7.1 Fire Commands - Continued

**Table N-13. Paladin Fire Commands Entry Display - Continued**

| Field | Description | Conditions for display |
|---|---|---|
| 5 | ALTITUDE<br>Range/Values:<br>(1) -400 to +9999<br>(2) - - - - -<br>Default/Initial value: Blank<br>Units: Meters | (1) Operator entered.<br>(2) - - - - - |
| 6 | GRID ZONE<br>Range/Values:<br>(1) +/- 1-60<br>Default/Initial value: Paladin's entered grid zone | (1) Defaults to the Paladin's current location.<br>(2) Shall be editable. |
| 7 | PROJECTILE/ FUZE<br>Range/Values:<br>(1) HE / Q<br>(2) HE / TI<br>(3) HE / VT<br>(4) HE / D<br>(5) HE / CP<br>(6) HE / CPD<br>(7) ICM /TI<br>(8) WP / Q<br>(9) WP / TI<br>(10) SMK / TI<br>(11) ILL / TI<br>(12) - - - - -<br>Default/Initial value: ------ | Note: The PROJECTILE / FUZE shall not be available until the target location (EASTING LONG, EASTING SHORT, NORTHING LONG and NORTHING SHORT) is entered and is calculated to be within 50,000 meters.<br>(1) Operator selected.<br>(2) Operator selected.<br>(3) Operator selected.<br>(4) Operator selected.<br>(5) Operator selected.<br>(6) Operator selected.<br>(7) Operator selected.<br>(8) Operator selected.<br>(9) Operator selected.<br>(10) Operator selected.<br>(11) Operator selected.<br>(12) Operator has not selected a PROJECTILE / FUZE. |

# N-8 AFCS FIRE MISSION - CONTINUED

## N-8.7 System Menus - Continued

N-8.7.1 Fire Commands - Continued

**Table N-13. Paladin Fire Commands Entry Display - Continued**

| Field | Description | Conditions for display |
|---|---|---|
| 8 | NUMBER OF ROUNDS<br>Range/Values:<br>(1) 1-99<br>(2) - -<br>Default/Initial value: ----- | Note: The NUMBER OF ROUNDS fields shall not be available until the target location (EASTING LONG, EASTING SHORT, NORTHING LONG and NORTHING SHORT) is entered and is calculated to be within 50,000 meters.<br>(1) Operator entered.<br>(2) Operator has not entered NUMBER OF ROUNDS. |

# N-8 AFCS FIRE MISSION - CONTINUED

## N-8.7 System Menus - Continued

N-8.7.1 Fire Commands - Continued

a. After target location (fields 1-6) has been entered, Paladin will calculate the range to target. If the calculated range to target exceeds 50,000 meters, Paladin will display “RANGE TOO FAR” “ACK”.

b. Pressing ACK will allow operator to re-enter values into fields 1-6 of the PALADIN FIRE COMMANDS ENTRY display. Once the Paladin calculates the range to be within 50,000 meters, fields 7-8 will be available.

c. Selection of field 7 (Projectile/Fuze) will display the PALADIN FIRE COMMANDS ENTRY - PROJECTILE/FUZE SELECTIONS screen.

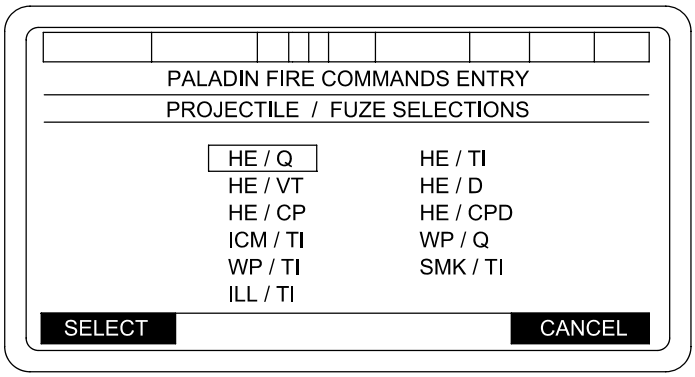


06pc300tg

d. The PALADIN FIRE COMMANDS ENTRY - PROJECTILE/FUZE SELECTIONS display will be populated with Projectile/Fuze combinations values that are available. Selection of a Projectile/Fuze will transition display back to PALADIN FIRE COMMANDS ENTRY screen.

**NOTE**

A target number block will be assigned by the Paladin. These target numbers will from PF9974 to PF9999. The target numbers will recycle when PF9999 is reached or there is a system restart.

Softkey sequencing shall be as follows:

- USE ALL - Paladin will transition to FIRE MISSION display. If dashed (----) fields remain in the display, the following message will display “INCOMPLETE ENTRY” “ACK”. Pressing ACK will end the mission and allow the operator to edit the mission data.

  If an error is detected (an error is a condition that causes to fire mission to be rejected), the Paladin shall abort the mission and return to the PALADIN FIRE COMMANDS ENTRY screen after 5 seconds. Upon return to the PALADIN FIRE COMMANDS ENTRY screen, the Paladin will display an appropriate operator message to indicate what caused the fire mission to abort.

- INVENTORY - Transitions to the AMMO INVENTORY display.

- + / – - Changes sign for current value.

- CANCEL - Transitions to SETUP AND INFORMATION menu.

# N-8 AFCS FIRE MISSION - CONTINUED

## N-8.7 System Menus - Continued

N-8.7.2 Messages. The two types of AFCS messages accessed from the SETUP AND INFORMATION menu are RECEIVED MSG and WARNING MSG. The received messages are ones received from the POC and the warning messages are generated by the AFCS for system status. When there is a new message to read, a RCVD MSG (R) highlighted field 5 or WARN MSG (W) highlighted field 4 indicator will be displayed at the top of the screen. Access messages using the following procedures:

a. Box in desired message on SETUP AND INFORMATION menu and press SELECT key to display a RECEIVED MESSAGE/SYSTEM WARNING MESSAGE.

b. If more than one message is in the message queue, display next message by pressing the NEXT MSG key. If a message contains more than one page, display next page by pressing NEXT PAGE key.

c. To return to the SETUP AND INFORMATION menu, press CANCEL key.

**NOTE**

- The AFCS will keep eight (8) messages in a buffer. If there are more than eight unviewed messages, the AFCS will discard the oldest and display the error message “MESSAGES HAVE BEEN LOST” “ACK” to the operator upon entry into the screen.
- The RECEIVED MESSAGE counter has a range from 0001 to 9999 and will rest on each power-up.

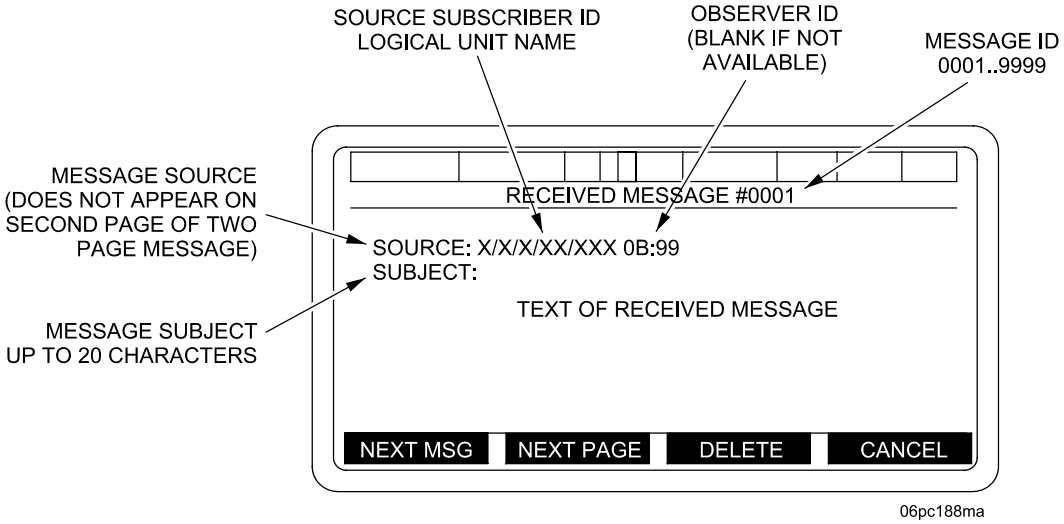


NEXT MSG = DISPLAY NEXT MESSAGE (WHEN ON THE LAST MESSAGE AND NEXT MSG IS PRESSED, THE DISPLAY SCROLLS TO THE FIRST MESSAGE IN THE BUFFER)

NEXT PAGE = DISPLAY NEXT PAGE (BLANKED IF NO NEXT PAGE)

DELETE = DELETE CURRENT MESSAGE (IF THERE ARE NO MORE MESSAGES, THEN “NO MORE MESSAGES” SHALL BE DISPLAYED

# N-8 AFCS FIRE MISSION - CONTINUED

## N-8.7 System Menus - Continued

N-8.7.2 Messages - Continued

**NOTE**

The SYSTEM WARNING MESSAGE counter has a range from 0001 to 9999 and will reset on each power-up. If the counter reaches 9999, then the next WARNING MESSAGE number will be reset to 0001.

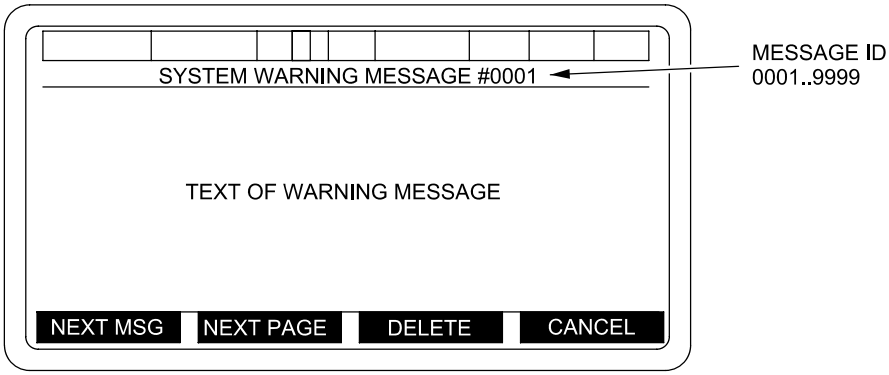


06pc189ma

NEXT MSG = DISPLAY NEXT MESSAGE (WHEN ON THE LAST MESSAGE AND NEXT MSG IS PRESSED, THE DISPLAY SCROLLS TO THE FIRST MESSAGE IN THE BUFFER)

NEXT PAGE = DISPLAY NEXT PAGE (BLANKED IF NO NEXT PAGE)

DELETE = DELETE CURRENT MESSAGE (IF THERE ARE NO MORE MESSAGES, THEN "NO MORE MESSAGES" SHALL BE DISPLAYED

N-8.7.3 Maximum Tube Elevation. From the SET UP AND INFORMATION menu select MAX TUBE EL to input the maximum tube elevation.

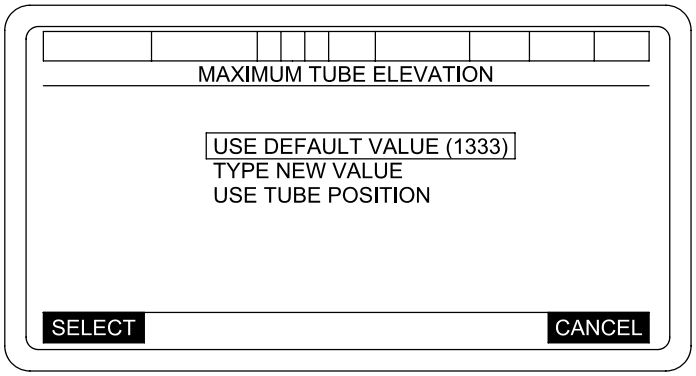


06pc154ma

a. Entering MAXIMUM TUBE ELEVATION. If a maximum tube elevation is not entered, the default value as shown on the display will be entered automatically. If an elevation other than the default value is desired, the entry can be made by either of two methods:

# N-8 AFCS FIRE MISSION - CONTINUED

## N-8.7 System Menus - Continued

N-8.7.3 Maximum Tube Elevation - Continued

### NOTE

- Numerical value must be entered before sign. Default sign is (+).
- The AFCS will default to maximum tube elevation of 1333 mils unless a value or the USE TUBE POSITION was selected since last power up or restart.

(1) Box in TYPE NEW VALUE and depress SELECT to bring up a new MAXIMUM TUBE ELEVATION display. Enter required value for MAX TUBE EL and press ENT key.

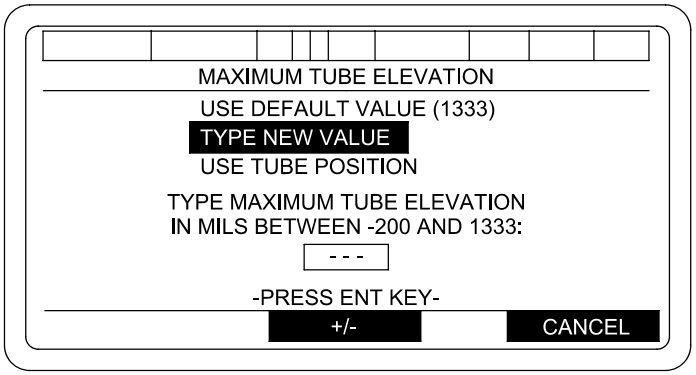


06pc655m

(2) Box in USE TUBE POSITION and press SELECT key to bring up a new MAXIMUM TUBE ELEVATION display. Using the COS or gunner's control handle, move tube to desired elevation and press ENT key.

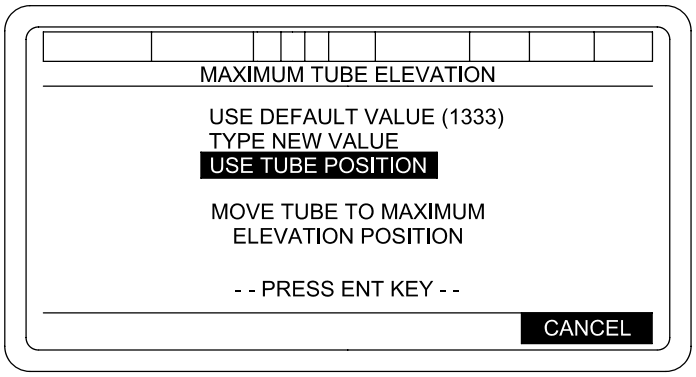


06pc156ma

# N-8 AFCS FIRE MISSION - CONTINUED

## N-8.7 System Menus - Continued

N-8.7.4 Send Checkfire. Selecting SEND CHECKFIRE will result in questions asked, “ARE YOU SURE” “YES” “NO”. YES selection will cause all howitzer systems to be placed on CHECKFIRE. Only the POC/FDC can cancel the CHECKFIRE. NO selection = No action.

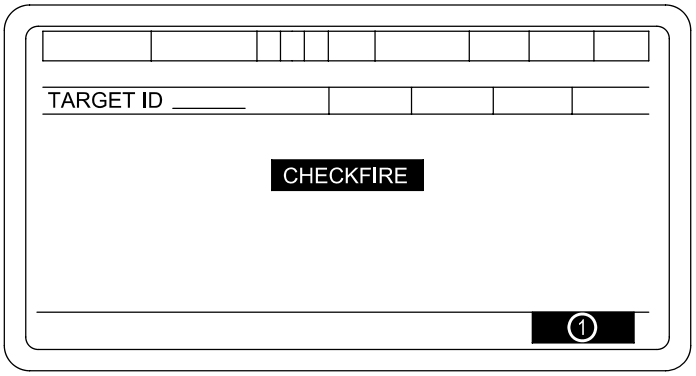


06pc145tb

1 EOM - MISSION is direct or manual

ABORT - MISSION is not direct or manual

N-8.7.5 Stored Targets. The AFCS can store up to ten targets. These targets can be reviewed for information concerning target number, rounds to be fired, shell, propellant, fuze, and method of control. To access the target summary, perform the following steps:

a. Box in STORED TARGETS on SETUP AND INFORMATION menu and press SELECT key to display a STORED TARGET SUMMARY screen.

b. If there is more than one page, press NEXT PAGE key to display next page.

c. To return to SETUP AND INFORMATION menu, press CANCEL key.

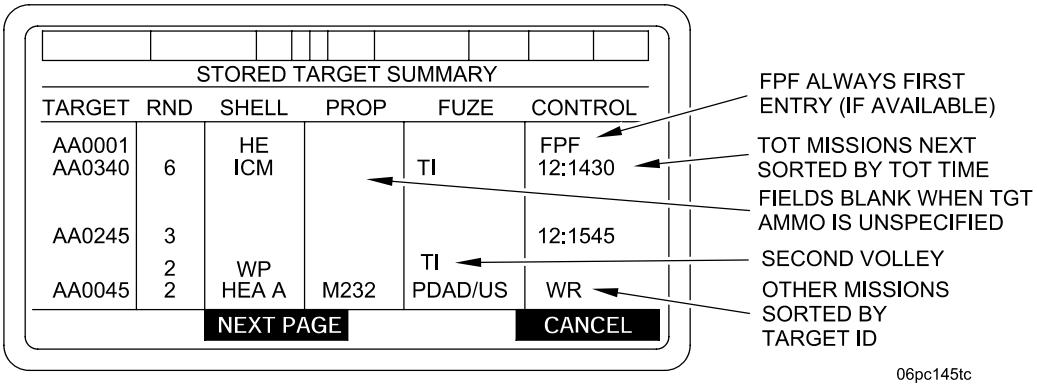


06pc145tc

NEXT PAGE = Shows next page. If last page, then shows first page. (Blanked if only one page or no targets).

d. Paladin will store the shell and/or fuze model as received and display that data based on its associated generic type. SHELL values are HE, ICM, WP, SMK, ILL, CPH and SAD. FUZE values are PD, TI, VT, D, CP or CPD. Shell model numbers are shown in Table N-14. Fuze model numbers are shown in Table N-15.

# N-8 AFCS FIRE MISSION - CONTINUED

## N-8.7 System Menus - Continued

N-8.7.5 Stored Targets - Continued

**Table N-14. Shell Model Numbers**

| HE SHELLS | ICM SHELLS | WP SHELLS | SMK SHELLS | ILL SHELLS | CPH SHELL | SAD SHELL |
|---|---|---|---|---|---|---|
| M795 | M483A1 | M110 | M116A1/HC | M485A1 | M712 | M898 |
| M107DC | M864 | M110A1 | M116C1 | M485A2 | | DM702 |
| M107DCBG | M864A1 | M110A2 | M116C2 | NR109 | | DM702A1 |
| M107DCB2 | M449A1 | M110E2 | DM45A1 | | | O155ACF1 |
| M107DCC1 | M718 | M110C1 | | | | 155BONUS |
| NM28DC | M718A1 | M825 | | | | |
| OE56DC | M741 | M825A1 | | | | |
| OE69DC | M741A1 | | | | | |
| DM21DC | M692 | | | | | |
| M107NC | M731 | | | | | |
| M107NCBG | | | | | | |
| M107NCB2 | | | | | | |
| M107NCC1 | | | | | | |
| NM28NC | | | | | | |
| OE56NC | | | | | | |
| OE69NC | | | | | | |
| DM21NC | | | | | | |
| M549 | | | | | | |
| M549A1 | | | | | | |

# N-8 AFCS FIRE MISSION - CONTINUED

## N-8.7 System Menus - Continued

N-8.7.5 Stored Targets - Continued

**Table N-15. Fuze Model Numbers**

| PD FUZES | TI FUZE | VT FUZE | D FUZE | CP/CPD FUZE |
|---|---|---|---|---|
| M51A4 | M767 | M732A2 | M51A4 | M78 |
| M51A5 | M767A1 | M732 | M51A5 | M78A1 |
| M557 | M762 | M728 | M557 | DM371 |
| PDM557 | M762A1 | M782 | PDM557 | MK399 |
| M557C1 | M564 | M514 | M557C1 | |
| M572 | M577 | | M739 | |
| M739 | M577A1 | | M739A1 | |
| M739A1 | M565 | | M782 | |
| M782 | M582 | | DM211 | |
| DM211 | M582A1 | | DM241 | |
| DM241 | M782 | | M572 | |
| L32A2 | M548 | | L85A2 | |
| L32A3 | | | L106A2 | |
| L32A4 | | | L106A3 | |
| L85A2 | | | L112A1 | |
| L106A1 | | | | |
| L106A2 | | | | |
| L106A3 | | | | |
| L112A1 | | | | |

**NOTE**

- If no targets are stored in the Stored Target buffer, then the AFCS shall display “NO STORED TARGETS”.
- Shell and fuze entries will be blank if the stored mission arrives from the FDC with unspecified ammunition and is not an FPF mission (as shown above in target ID AA0245).
- Targets with RND (rounds) over 99 are displayed with **.

N-8.7.6 AFCS Status. To display the AFCS SUBSYSTEM STATUS, proceed as follows:

a. Box in AFCS STATUS on SETUP AND INFORMATION menu and press SELECT to display the AFCS STATUS screen.

b. Cursor and select an AFCS subsystem to view the subsystems. The status of each subsystem will be displayed either “OK” or “FAIL”.

c. To return to the SETUP AND INFORMATION menu, press CANCEL key.

# N-8 AFCS FIRE MISSION - CONTINUED

## N-8.7 System Menus - Continued

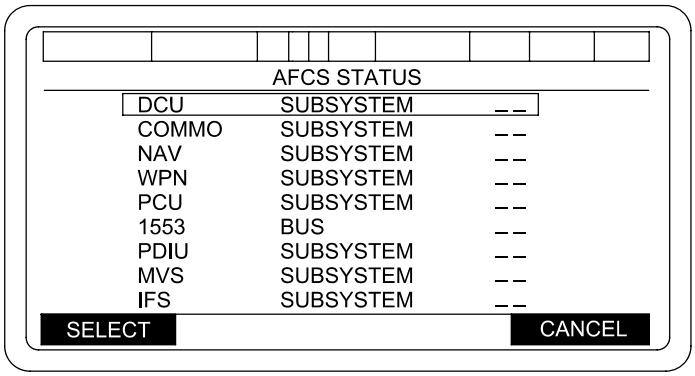


06pc075me

N-8.7.7 Last Move Orders. To display the last move orders received by the AFCS, proceed as follows:

a. Box in LAST MOVE ORDERS on SETUP AND INFORMATION menu and press SELECT key. A STEERTO FIRE AREA screen will be displayed showing LAST MOVE ORDERS.

b. Press the EMPLACE key to display an EMPLACE FIRE AREA screen showing LAST MOVE ORDERS.

c. From STEERTO FIRE AREA or EMPLACE FIRE AREA screen, the SETUP AND INFORMATION menu can be reached by pressing the CANCEL key.

**NOTE**

This will not be available after the first Survivability Move.

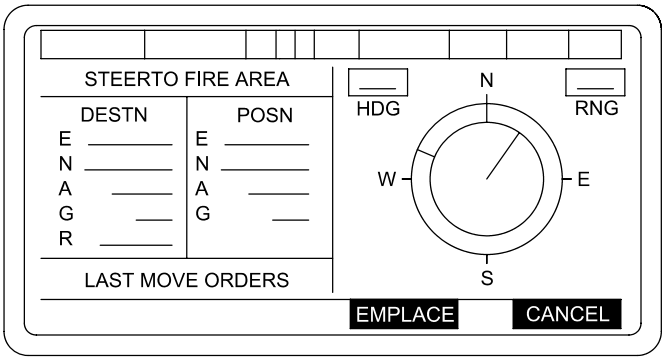


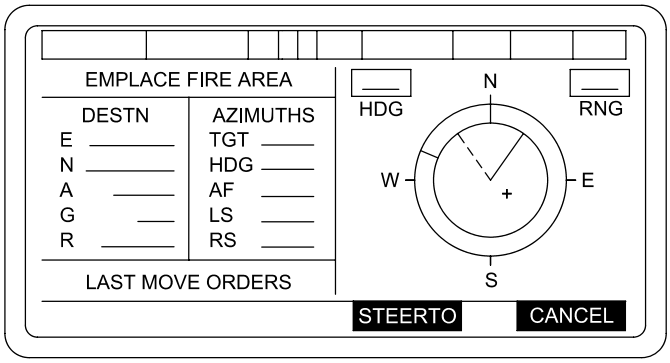


06pc192mb

# N-8 AFCS FIRE MISSION - CONTINUED

## N-8.7 System Menus - Continued

N-8.7.8 Tube Temperature. The TUBE TEMPERATURE STATUS is shown on the FIRE MISSION screen as COLD, WARM, or HOT; and a time is displayed which indicates how long a complete round may remain in the tube. TUBE TEMPERATURE STATUS can also be displayed as follows:

a. Box in TUBE TEMPERATURE on SETUP AND INFORMATION menu and press SELECT key.

b. A TUBE TEMPERATURE screen will be displayed showing TEMPERATURE STATUS (COLD, WARM, HOT), and SAFE TIME IN TUBE.

c. To return to SETUP AND INFORMATION menu, press CANCEL key.

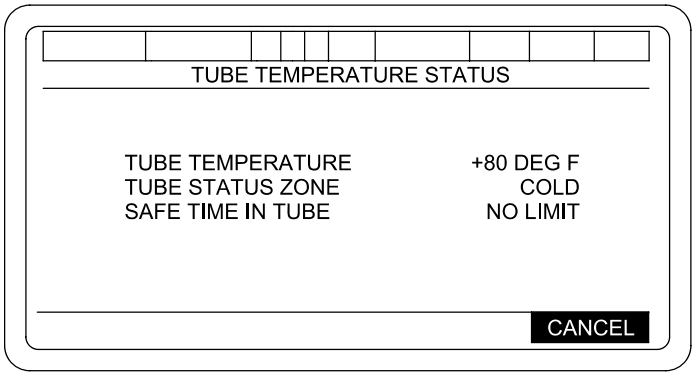


06pc193ma

N-8.7.9 System Restart. To do a SYSTEM RESTART without shutting the system off and powering back up, proceed as follows:

a. Box in SYSTEM RESTART on SETUP AND INFORMATION menu and press SELECT key. A prompt will be displayed, “ARE YOU SURE” “YES” “NO”.

b. The system will restart at a POWER UP STATUS.

c. INITIALIZATION must be performed.

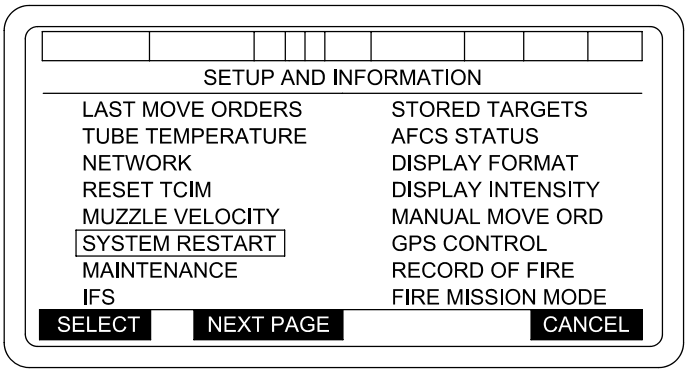


06pc261tk

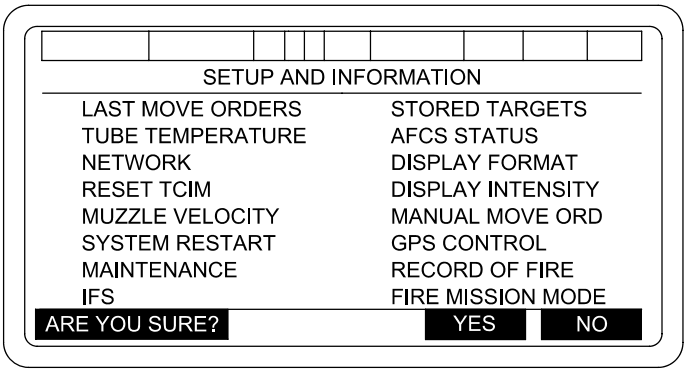


06pc261tm

# N-8 AFCS FIRE MISSION - CONTINUED

## N-8.7 System Menus - Continued

N-8.7.10 Display Format. This function is used to change the display of the tube position from AZIMUTH to DEFLECTION, and vice versa; or the TEMPERATURE STATUS display from Fahrenheit to Celsius, and vice versa. This display format is changed as follows:

a. Box in DISPLAY FORMAT on SETUP AND INFORMATION menu and press SELECT key to display a DISPLAY FORMAT screen.

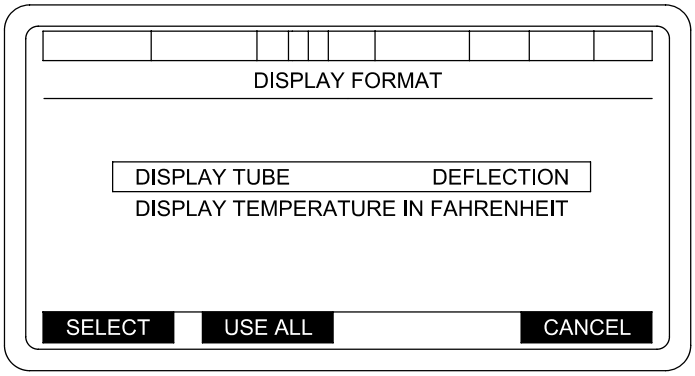


06pc196ma

b. To change deflection, box in DISPLAY TUBE DEFLECTION and press SELECT to display another DISPLAY FORMAT screen.

c. This screen asks the question: “CHANGE TO AZIMUTH/DEFLECTION?” Press the appropriate softkey, YES or NO. This will return the display to the original DISPLAY FORMAT screen.

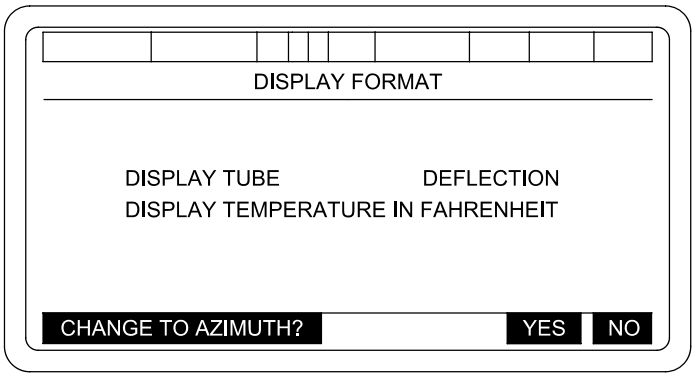


06pc197ma

# N-8 AFCS FIRE MISSION - CONTINUED

## N-8.7 System Menus - Continued

N-8.7.10 Display Format - Continued

d. To change the temperature display, box in DISPLAY TEMPERATURE IN FAHRENHEIT and press SELECT key to display another DISPLAY FORMAT screen.

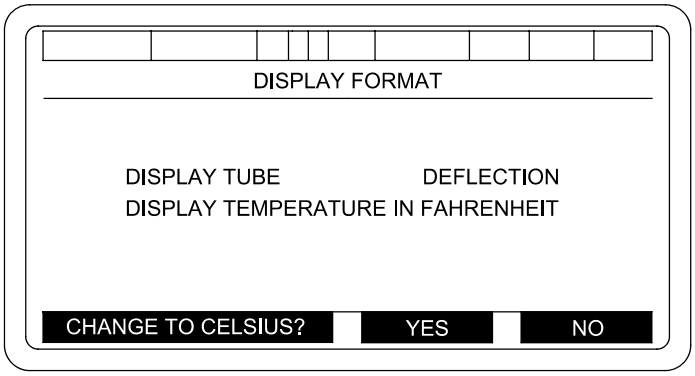


06pc198m

e. Answer screen question CHANGE TO CELSIUS/FAHRENHEIT? by pressing appropriate softkey.

f. When original DISPLAY FORMAT screen is displayed, press USE ALL key to return to SETUP AND INFORMATION menu.

N-8.7.11 Display Intensity. The display intensity of the EL Panel can be changed to four different intensity levels as follows:

a. Box in DISPLAY INTENSITY on SETUP AND INFORMATION menu and press SELECT key to display a SELECT DISPLAY INTENSITY screen.

b. On the SELECT DISPLAY INTENSITY screen, box in desired intensity and press SELECT key. Display will change to the selection made.

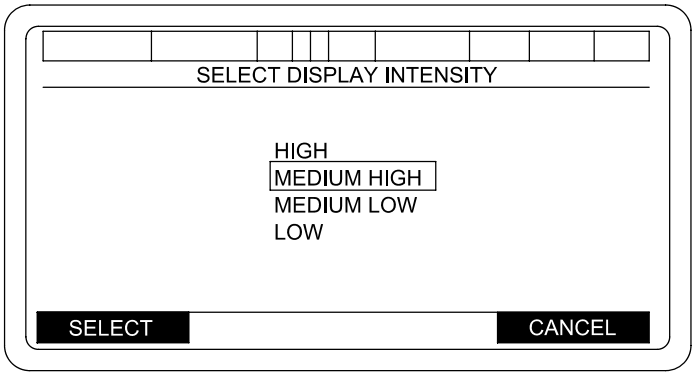


06pc199ma

# N-8 AFCS FIRE MISSION - CONTINUED

## N-8.7 System Menus - Continued

N-8.7.12 Manual Move Order. When it is necessary to move the howitzer without a move order from the POC enter the movement data as follows:

a. Box in MANUAL MOVE ORDER on SETUP AND INFORMATION menu and depress SELECT key to display a MANUAL MOVE ORDER ENTRY screen.

b. Enter data by boxing in each data field and then typing in desired data. As each field is filled, press ENT key to enter data.

c. When all data has been entered, press USE ALL key. This will cause the SETUP AND INFORMATION screen to be displayed with MOVE ORD at the top. Press CANCEL key to display the MOVE ORDER screen (STEERTO or EMPLACE).

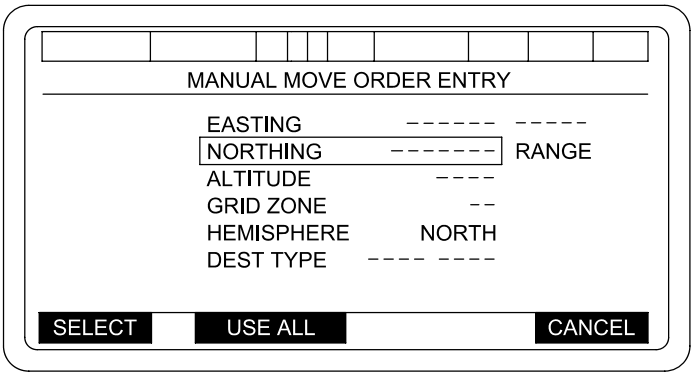


06pc262t

### NOTE

- If the Move Order coordinates are outside the MapMod, no AFCS warning message will be issued. All Move Order coordinates should be checked with a map spot, or through some other secondary means to insure they are within the current MapMod.
- If the Move Order coordinates are in an adjacent Grid Zone, the AFCS will automatically convert these coordinates to the MapMod Grid Zone. Once the STEER TO screen is displayed, the entered coordinates will be converted to the MapMod Grid Zone. If a map spot is performed, the MapMod Grid Zone will need to be extended into the adjacent Grid Zone.
- If Destination Type is to a FIRING POINT, Operator must input SECTOR OF FIRE prior to inputting a Manual Move Order.

# N-8 AFCS FIRE MISSION - CONTINUED

## N-8.7 System Menus - Continued

N-8.7.12 Manual Move Order - Continued

### NOTE - Continued

- Destination Types are: LOG POINT (for resupply), INIT POINT (for survey control point) and FIRE POINT.
- If DO NOT MOVE was on the screen before you start this move, the AFCS will notify FDC that the howitzer is moving.
- RANGE shows the distance to the entered point from the current location based on easting and northing. It is not operator selectable. Move order distance will only be displayed up to 99,999 meters. If the value is 100,000 to 350,000 meters, "*****" will be displayed. If the value is more than 350,000 meters, you will receive an error message, "DISTANCE EXCEEDS 350 KM" "ACK".
- If the position entered is above 84 degrees north or below 80 degrees south, the entry will be rejected and you will receive an error message, "POSITION IS NOT VALID" "ACK".

N-8.7.13 GPS Control. Used to enhance positioning. The POC will instruct you when to use GPS Control.

### NOTE

Use according to unit SOP.

a. Select either USE GPS AIDING or USE ONLY CODED GPS DATA.

b. You will receive the following operator prompts.

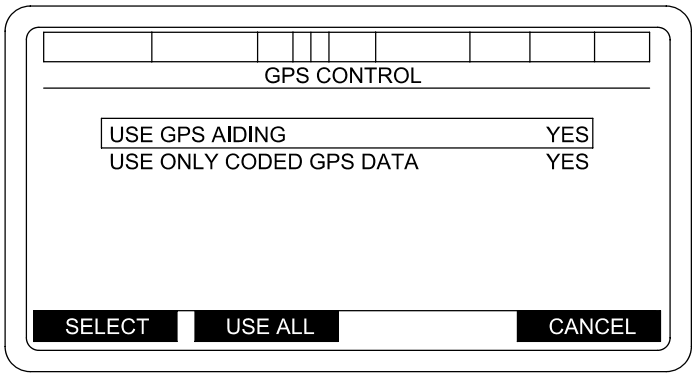


OPERATOR PROMPTS (ON SOFTKEY LINE): 06pc201ma

1. WHEN GPS AIDING SELECTED:

USE GPS AIDING ? | YES | NO

2. WHEN USE ONLY CODED GPS DATA SELECTED:

USE ONLY CODED GPS? | YES | NO

NOTE: VALUES SHOWN ARE SYSTEM SUPPLIED DEFAULTS.

# N-8 AFCS FIRE MISSION - CONTINUED

## N-8.7 System Menus - Continued

N-8.7.14 Record of Fire.

### NOTE

- See Table N-16 for fields (1) through (5) criteria.
- When more than one page is required to display choices, MORE BELOW and/or MORE ABOVE may be used to navigate between screens.

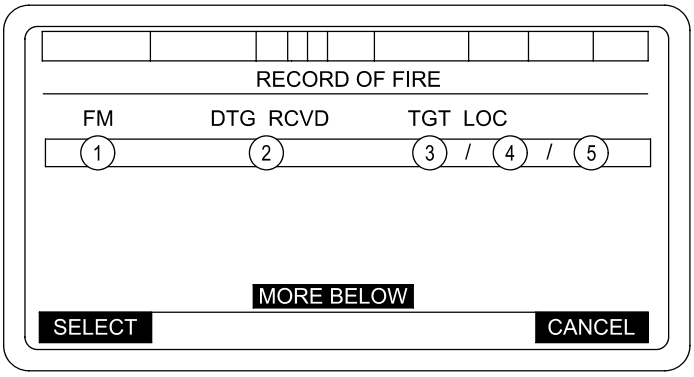


06pc191tg

### NOTE

If there are no targets in the Record of Fire, the SELECT softkey will not be available.

SELECT : View firing data from a particular mission.

CANCEL : Returns to SETUP AND INFORMATION menu.

Mission data displayed in order from latest received to earliest.

The following default criteria for FDC computed fire missions shall appear in the RECORD OF FIRE displays:

MET (CURRENT NVM)
POWDER TEMPERATURE (CURRENT NVM)
MVV (-99.9)
REGISTRATION DATA (NO DATA IS DISPLAYED)
TARGET LOCATION AND ELEVATION (ZEROS)

# N-8 AFCS FIRE MISSION - CONTINUED

## N-8.7 System Menus - Continued

N-8.7.14 Record of Fire - Continued

**Table N-16. Record of Fire Select Target Display**

| Field | Description | Conditions for display |
|---|---|---|
| 1 | FM<br>Range/Values:<br>(1) MANUAL<br>(2) DIRECT<br>(3) AA0000-ZZ9999<br>(4) Blank | <br><br>(1) Indicates that an FDC Fire Commands mission was fired from the Paladin.<br>(2) Indicates that the Paladin has fired a mission in Direct Fire mode.<br>(3) Range values for target number received from the system initiating the Fire Mission, or Fire Commands initiated by the operator.<br>(4) Indicates that there are no fire missions in the Record of Fire. |
| 2 | DTG<br>Range/Values:<br>(1) YYMMDDHHMM<br>(2) Blank | <br><br>(1) The DTG Fire Mission was received.<br>(2) There are no fire missions in the record of fire. |
| 3 | Target Location Easting<br>Range/Values:<br>(1) 000000-999999<br>(2) Blank | <br><br>(1) Easting of the target location.<br>(2) Indicates that the Paladin has fired an FDC FIRE COMMANDS Fire Mission or there are no fire missions in the Record of Fire. |
| 4 | Target Location Northing<br>Range/Values:<br>(1) 0-9999999<br>(2) Blank | <br><br>(1) Northing of the target location.<br>(2) Indicates that the Paladin has fired an FDC FIRE COMMANDS Fire Mission or there are no fire missions in the Record of Fire. |
| 5 | Target Location Altitude<br>Range/Values:<br>(1) -400 to +9999<br>(2) Blank | <br><br>(1) Altitude of the target location.<br>(2) Indicates that the Paladin has fired an FDC FIRE COMMANDS Fire Mission or there are no fire missions in the Record of Fire. |

# N-8 AFCS FIRE MISSION - CONTINUED

## N-8.7 System Menus - Continued

N-8.7.14 Record of Fire - Continued

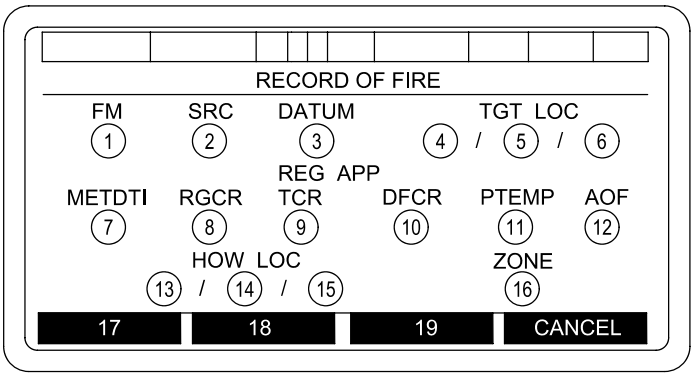


06pc191th

**Table N-17. Record of Fire Display**

| Field | Description | Conditions for display |
|---|---|---|
| 1 | FM<br>Range/Values:<br>(1) MANUAL<br>(2) DIRECT<br>(3) AA0000-ZZ9999<br><br>Resolution: NA<br>Default/Initial: NA<br>Units: NA | <br><br>(1) FDC FIRE COMMANDS computed mission was fired from the Paladin.<br>(2) Paladin has fired a mission in Direct Fire mode.<br>(3) Range values for target number received from FDC/Additional subscriber initiating the Fire Mission, or Paladin Fire Commands initiated by the operator. |
| 2 | SRC (source of mission)<br>Range/Values:<br>(1) FDC<br>(2) OPR<br>(3) OTH<br><br>Resolution: NA<br>Default/Initial: NA<br>Units: NA | <br><br>(1) Fire Mission was sent digitally from the FDC.<br>(2) Fire Mission is a FDC FIRE COMMANDS, DIRECT, or PALADIN FIRE COMMANDS Fire Mission.<br>(3) Fire Mission is received from an additional subscriber to the Paladin (i.e. not the FDC or backup FDC). |

# N-8 AFCS FIRE MISSION - CONTINUED

## N-8.7 System Menus - Continued

N-8.7.14 Record of Fire - Continued

**Table N-17. Record of Fire Display - Continued**

| Field | Description | Conditions for display |
|---|---|---|
| 3 | DATUM<br>Range/Values:<br>(1) See appendix J.1-1 Spheroid and Datum table (not selectable by the operator on this display).<br>Resolution: NA<br>Default/Initial: NA<br>Units: NA | (1) Paladin will display the DATUM. |
| 4 | Target Location Easting<br>Range/Values:<br>(1) 000000-999999<br>(2) Blank<br>Resolution: NA<br>Default/Initial: Blank<br>Units: NA | (1) Easting of the target location.<br>(2) Indicates that the Paladin has fired an FDC FIRE COMMANDS Fire mission. |
| 5 | Target Location Northing<br>Range/Values:<br>(1) 0-9999999<br>(2) Blank<br>Resolution: NA<br>Default/Initial: Blank<br>Units: NA | (1) Northing of the target location.<br>(2) Indicates that the Paladin has fired an FDC FIRE COMMANDS Fire Mission. |

# N-8 AFCS FIRE MISSION - CONTINUED

## N-8.7 System Menus - Continued

N-8.7.14 Record of Fire - Continued

**Table N-17. Record of Fire Display - Continued**

| Field | Description | Conditions for display |
|---|---|---|
| 6 | Target Location Altitude<br>Range/Values:<br>(1) -400 through +9,999<br>(2) Blank<br>Resolution: NA<br>Default/Initial: Blank<br>Units: NA | (1) Altitude of the target location.<br>(2) Indicates that the Paladin has fired an FDC FIRE COMMANDS Fire Mission. |
| 7 | METDTI (Metrological Correction)<br>Range/Values<br>(1) DDHH.M (where DD represents Day where HH represents Hour and M represents tenths of minutes).<br>(2) 1 0.0<br>Resolution: NA<br>Default/Initial: NA<br>Units: NA | (1) Date Time Group of the MET message that was applied to the Fire Mission.<br>(2) No MET message was received. |
| 8 | RGCR (Range Correction)<br>Range/Values:<br>(1) -4095 to 4095<br>(2) 0<br>Resolution: NA<br>Default/Initial: 0<br>Units: Meters | (1) A registration range correction was applied by the Paladin to the Fire Mission.<br>(2) There was no range correction applied by the Paladin or the mission is an FDC computed Fire Mission or FDC FIRE COMMANDS Fire Mission. |

# N-8 AFCS FIRE MISSION - CONTINUED

## N-8.7 System Menus - Continued

N-8.7.14 Record of Fire - Continued

**Table N-17. Record of Fire Display - Continued**

| Field | Description | Conditions for display |
|---|---|---|
| 9 | TCR (Time Correction)<br>Range/Values<br>(1) -9.9 to 9.9<br>(2) 0.00<br>Resolution: NA<br>Default/Initial: 0.00<br>Units: Seconds | (1) A registration time correction was applied by the Paladin to the Fire Mission.<br>(2) There was no time correction applied by the Paladin or the mission is an FDC computed Fire Mission or an FDC FIRE COMMANDS Fire Mission. |
| 10 | DFCR (Deflection Correction)<br>Range/Values<br>(1) L 999 to R 999<br>(2) 0.00<br>Resolution: NA<br>Default/Initial: 0.00<br>Units: Mils | (1) A registration deflection correction was applied by the Paladin to the Fire Mission.<br>(2) There was no time correction applied by the Paladin or the mission is an FDC computed Fire Mission or an FDC FIRE COMMANDS Fire Mission. |
| 11 | PTEMP<br>Range/Values<br>(1) -40 to 145 F<br>Resolution: NA<br>Default/Initial: 70<br>Units: Degrees | (1) Propellant Temperature at the time the Fire Mission was processed. |
| 12 | AOF<br>Range/Values<br>(1) 0-6399<br>Resolution: NA<br>Default/Initial: NA<br>Units: Mils | (1) Azimuth of Fire at the time the mission was fired. |
| 13 | Howitzer Location Easting<br>Range/Values:<br>(1) 1 to 999999<br>Resolution: NA<br>Default/Initial: Blank<br>Units: NA | (1) Easting location of the Paladin during the Fire Mission. |

# N-8 AFCS FIRE MISSION - CONTINUED

## N-8.7 System Menus - Continued

N-8.7.14 Record of Fire - Continued

**Table N-17. Record of Fire Display - Continued**

| Field | Description | Conditions for display |
|---|---|---|
| 14 | Howitzer Location Northing<br>Range/Values:<br>(1) 0 to 9999999<br>Resolution: NA<br>Default/Initial: Blank<br>Units: NA | (1) Northing location of the Paladin during the Fire Mission. |
| 15 | Howitzer Location Altitude<br>Range/Values:<br>(1) -400 to +9,999<br>Resolution: NA<br>Default/Initial: Blank<br>Units: NA | (1) Altitude of the Paladin during the Fire Mission. |
| 16 | Zone<br>Range/Values<br>(1) 1 to 60<br>(2) -1 to -60<br>Resolution: NA<br>Default/Initial: Blank<br>Units: NA | (1) Grid zone that the Paladin was located in during the Fire Mission (Northern Hemisphere).<br>(2) Grid zone that the Paladin was located in during the Fire Mission (Southern Hemisphere). |
| 17 | ADJ<br>Range/Values<br>(1) ADJ<br>(2) Blank<br>Resolution: NA<br>Default/Initial: Blank<br>Units: NA | (1) There is an adjust phase for the mission or when the mission ended before the Fire For Effect phase began.<br>(2) No adjust phase for the mission. |

# N-8 AFCS FIRE MISSION - CONTINUED

## N-8.7 System Menus - Continued

N-8.7.14 Record of Fire - Continued

**Table N-17. Record of Fire Display - Continued**

| Field | Description | Conditions for display |
|---|---|---|
| 18 | FFE1<br>Range/Values:<br>(1) FFE1<br>(2) Blank<br>Resolution: NA<br>Default/Initial: Blank<br>Units: NA | (1) FFE1 phase during a mission.<br>(2) Fire Mission is an FDC FIRE COMMANDS or DIRECT or there was no FFE1 phase. |
| 19 | FFE2<br>Range/Values:<br>(1) FFE2<br>(2) Blank<br>Resolution: NA<br>Default/Initial: Blank<br>Units: NA | (1) There was a second Fire for Effect phase for the mission.<br>(2) There was no FFE2 phase for the mission. |

# N-8 AFCS FIRE MISSION - CONTINUED

## N-8.7 System Menus - Continued

N-8.7.14 Record of Fire - Continued

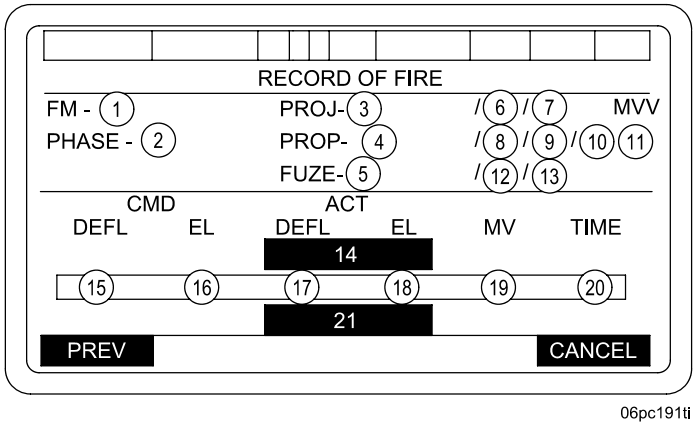


PREV : Returns to previous screen for viewing pre-shot data of different phase

CANCEL : Return to RECORD OF FIRE menu

**Table N-18. Record of Fire Data Display**

| Field | Description | Conditions for display |
|---|---|---|
| 1 | FM<br>Range/Values:<br>(1) MANUAL<br>(2) DIRECT<br>(3) AA0000-ZZ9999<br>Resolution: NA<br>Default/Initial: Blank<br>Units: NA | (1) An operator initiated FDC FIRE COMMANDS computed mission was fired from the Paladin.<br>(2) A mission was fired in Direct Fire mode.<br>(3) Range values for target number received from FDC or additional subscribers initiating the Fire Mission, or Paladin Fire Commands initiated by the operator. |
| 2 | PHASE<br>Range/Values:<br>(1) ADJ<br>(2) FFE1<br>(3) FFE2<br>Resolution: NA<br>Default/Initial: Blank<br>Units: NA | (1) Adjust Fire phase.<br>(2) Fire for Effect 1 phase.<br>(3) Fire for Effect 2 phase. |

# N-8 AFCS FIRE MISSION - CONTINUED

## N-8.7 System Menus - Continued

N-8.7.14 Record of Fire - Continued

**Table N-18. Record of Fire Data Display - Continued**

| Field | Description | Conditions for display |
|---|---|---|
| 3 | PROJ<br>Range/Values:<br>(1) PROJ (shell) model only (see table N-6 for US munitions)<br>Resolutions: NA<br>Default/Initial: Blank<br>Units: NA | (1) Initial projectile fired during the selected phase (ADJ, FFE1, or FFE2) of the Fire Mission. |
| 4 | PROP<br>Range/Values<br>(1) PROP model only (see table N-6 for US munitions)<br>Resolution: NA<br>Default/Initial: Blank<br>Units: NA | (1) Initial propellant fired during the selected phase (ADJ, FFE1, or FFE2) of the Fire Mission. |
| 5 | FUZE<br>Range/Values:<br>(1) FUZE model only (see table N-6 for US munitions)<br>(2) Blank<br>Resolution: NA<br>Default/Initial: Blank<br>Units: NA | (1) Initial fuze fired during the selected phase (ADJ, FFE1, or FFE2) of the Fire Mission.<br>(2) Projectile XM982, M982, or M712 (Copperhead) was fired. |

# N-8 AFCS FIRE MISSION - CONTINUED

## N-8.7 System Menus - Continued

N-8.7.14 Record of Fire - Continued

**Table N-18. Record of Fire Data Display - Continued**

| Field | Description | Conditions for display |
|---|---|---|
| 6 | Projectile Lot<br>Range/Values:<br>(1) A-Z<br><br>Resolution: NA<br>Default/Initial: Blank<br>Units: NA | (1) Projectile lot designator of the projectile fired during the selected phase (ADJ, FFE1, or FFE2) of the Fire Mission. |
| 7 | Projectile CC (Country Code)<br>Range/Values:<br>(1) Projectile CC only (see table N-6 for US munitions)<br>Resolution: NA<br>Default/Initial: Blank<br>Units: NA | (1) CC of the projectile fired during the selected phase (ADJ, FFE1, or FFE2) of the Fire Mission. |
| 8 | Propellant Lot<br>Range/Values:<br>(1) A-Z<br><br>Resolution: NA<br>Default/Initial: Blank<br>Units: NA | (1) Propellant lot designator of the propellant fired during the selected phase (ADJ, FFE1, or FFE2) of the Fire Mission. |
| 9 | Propellant Charge<br>Range/Values:<br>(1) Prop charge only (see table N-6 for US munitions)<br>Resolution: NA<br>Default/Initial: Blank<br>Units: NA | (1) Propellant charge of the propellant fired during the selected phase (ADJ, FFE1, or FFE2) of the Fire Mission. |

# N-8 AFCS FIRE MISSION - CONTINUED

## N-8.7 System Menus - Continued

N-8.7.14 Record of Fire - Continued

**Table N-18. Record of Fire Data Display - Continued**

| Field | Description | Conditions for display |
|---|---|---|
| 10 | Propellant CC (Country Code)<br>Range/Values:<br>(1) Projectile CC only (see table N-6 for US munitions)<br>Resolution: NA<br>Default/Initial: NA<br>Units: NA | (1) Propellant country code for the propellant fired during the selected phase (ADJ, FFE1, or FFE2) of the Fire Mission. |
| 11 | MVV<br>Range/Values:<br>(1) -99.9 to 99.9<br>Resolution: NA<br>Default/Initial: 0.0<br>Units: NA | (1) Total MVV applied to the selected phase (ADJ, FFE1, or FFE2) of the Fire Mission. |
| 12 | Fuze Setting<br>Range/Values:<br>(1) PD<br>(2) DLY<br>(3) VT<br>(4) 00.0 to 500.0<br>(5) NN PPP<br>Resolution: NA<br>Default/Initial: 0.0 | (1) Fuze is fired with a PD setting during the selected phase (ADJ, FFE1, or FFE2) of the Fire MIssion.<br>(2) Fuze is fired with a DLY setting during the selected phase (ADJ, FFE1, or FFE2) of the Fire Mission.<br>(3) XM982 or M982 is fired with a VT setting during the selected phase (ADJ, FFE1, or FFE2) of the Fire Mission.<br>(4) Fuze time setting for the initial round of the selected phase (ADJ, FFE1, or FFE2) of the Fire Mission.<br>(5) NN PPP (where NN is the fuze setting and PPP is the Pulse Repetion Frequency Code). |
| 13 | FUZE CC (Country Code)<br>Range/Values<br>(1) FUZE CC (see table N-6 for US munitions)<br>Resolution: NA<br>Default/Initial: NA<br>Units: NA | (1) Fuze country code of the fuze fired during the selected phase (ADJ, FFE1, or FFE2) of the Fire Mission. |

# N-8 AFCS FIRE MISSION - CONTINUED

## N-8.7 System Menus - Continued

N-8.7.14 Record of Fire - Continued

**Table N-18. Record of Fire Data Display - Continued**

| Field | Description | Conditions for display |
|---|---|---|
| 14 | MOVE ABOVE<br>Range/Values:<br>(1) MORE ABOVE<br>(2) DATA (for rounds shot)<br>Resolution: NA<br>Default/Initial: Blank<br>Units: NA | (1) Used to navigate between screens when there is more DATA that can be viewed on this display by scrolling.<br>(2) Most recent DATA (up to the tenth shot) when there are no more than 4 recorded rounds fired for the selected phase or when scrolling is enabled. |
| 15 | CMD DEFL<br>Range/Values:<br>(1) 0.0 through 6399.9<br>Resolution: NA<br>Default/Initial: Blank<br>Units: Mils | (1) Command deflection for each round. |
| 16 | CMD EL<br>Range/Values:<br>(1) -200.0 through +1333.0<br>Resolution: NA<br>Default/Initial: Blank<br>Units: Mils | (1) Command elevation for each round. |
| 17 | ACT DEFL<br>Range/Values:<br>(1) 0.0 through 6399.9<br>Resolution: NA<br>Default/Initial: Blank<br>Units: Mils | (1) Actual deflection for each round at the time shot was detected. |

# N-8 AFCS FIRE MISSION - CONTINUED

## N-8.7 System Menus - Continued

N-8.7.14 Record of Fire - Continued

**Table N-18. Record of Fire Data Display - Continued**

| Field | Description | Conditions for display |
|---|---|---|
| 18 | ACT EL<br>Range/Values:<br>(1) -200.0 through +1333.0<br>Resolution: NA<br>Default/Initial: Blank<br>Units: Mils | (1) Actual elevation for each round at the time shot was detected. |
| 19 | MV (Muzzle Velocity)<br>Range/Values:<br>(1) 0 to 999.9<br>Resolution: NA<br>Default/Initial: 0.0<br>Units: Meters Per Second | (1) Muzzle velocity for each round of the Fire Mission. |
| 20 | TIME<br>Range/Values:<br>(1) 0000-5959<br>Resolution: NA<br>Default/Initial: NA<br>Units: Minutes/ Seconds | (1) Time the round was fired. |
| 21 | MORE BELOW<br>Range/Values:<br>(1) MORE BELOW<br>(2) DATA (for rounds shot)<br>Resolution: NA<br>Default/Initial: Blank<br>Units: NA | (1) Used to navigate between screens when there is more DATA that can be viewed on this display by scrolling.<br>(2) Displayed when there are no more than 4 recorded rounds fired for the selected phase or the first shot DATA appears. |

# N-8 AFCS FIRE MISSION - CONTINUED

## N-8.7 System Menus - Continued

N-8.7.14.1 Fire Mission Mode.

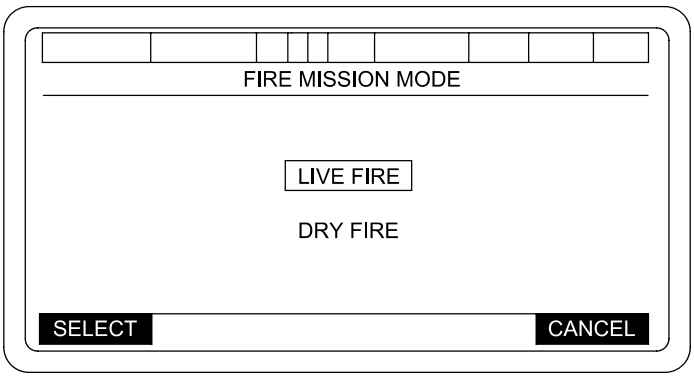


06pc269t

- When LIVE FIRE is selected, EFC updates shall be performed upon EOM/Abort Fire Mission Processing.
- When DRY FIRE is selected, Muzzle Velocity processing and EFC processing shall not be performed. All other functions are performed as they would be in a normal Live Fire Mode. An operator warning “D” shall be shown in position 4 of the Function Status Field. This warning shall remain in all screens until LIVE FIRE is selected.
- Pressing SELECT will transition display to the SETUP AND INFORMATION menu with the appropriate value shown in the Function Status field.

N-8.7.15 Muzzle Velocity. For more accurate firing data when computing ballistics, measured muzzle velocities are entered into the AFCS. Also, muzzle velocities can be entered as they are measured. This is performed as followed:

**WARNING**

Ensure that correct propellant temperature and shell weights are entered in AFCS. Failure to comply will result in incorrect ballistic computations. This could result in injury or death to friendly troops.

# N-8 AFCS FIRE MISSION - CONTINUED

## N-8.7 System Menus - Continued

N-8.7.15 Muzzle Velocity - Continued

a. Box in MUZZLE VELOCITY on SETUP AND INFORMATION menu and press SELECT key to display a MUZZLE VELOCITY VARIATION screen.

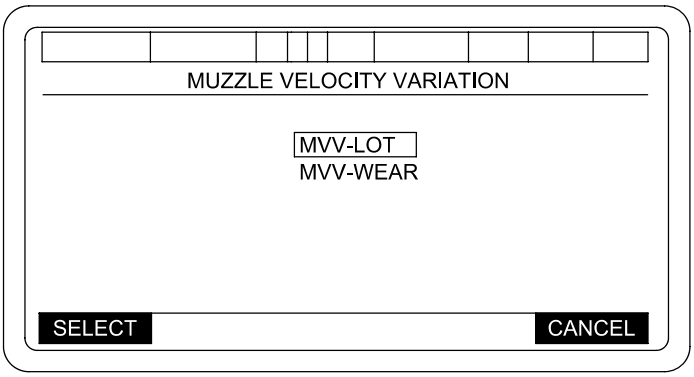


06pc266t

b. To delete muzzle velocity, box in MVV-LOT from the MUZZLE VELOCITY VARIATION screen and press SELECT.

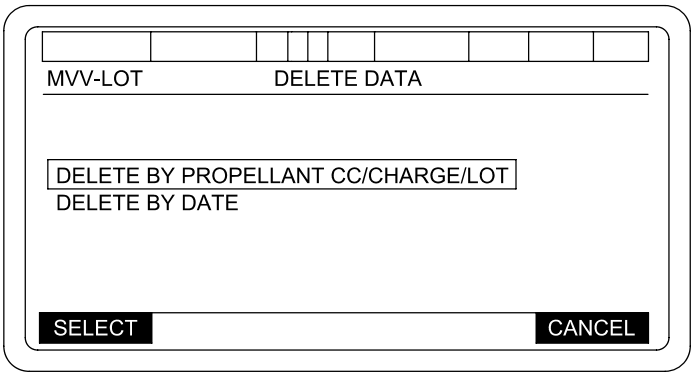


06pc266ta

# N-8 AFCS FIRE MISSION - CONTINUED

## N-8.7 System Menus - Continued

N-8.7.15 Muzzle Velocity - Continued

c. To delete muzzle velocity by propellant cc/charge/lot, box in DELETE BY PROPELLANT CC/CHARGE/LOT and press SELECT.

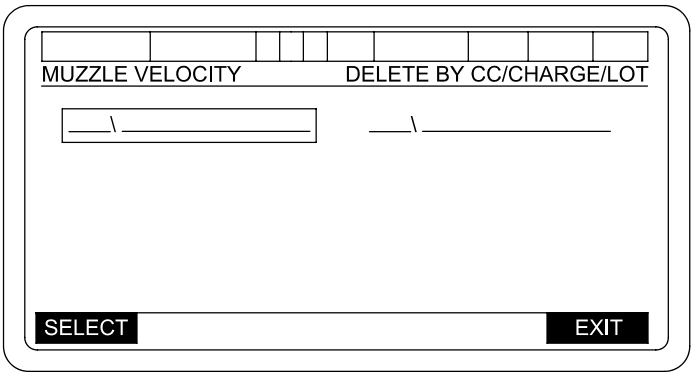


06pc273ta

Lots are displayed in ascending ASCII sort sequence by country, manufacturer's propellant lot, and then propellant charge. When SELECT softkey is pressed the short message "DELETE VELOCITY DATA" "YES" "NO" will be displayed. YES causes the MVV Lot data for the selected propellant lot to be deleted from the display. NO allows the re-selection of a propellant lot. While extended lot codes are being retrieved and sorted for display, the following message shall be displayed:

"RETRIEVING LIST PLEASE WAIT"

If no lots are available for deletion, the SELECT key will be blanked, you will have a CANCEL at softkey 4 and the message "NO LOTS TO DELETE" will be displayed.

If there is more than one page of entries in the MVV-Lot database, you will have a NEXT PAGE at softkey 2 and PREVIPAGE at softkey 3. If the first page of entries is displayed, the PREV PAGE softkey will be blanked. If the last page of entries is displayed, the NEXT PAGE softkey will be blanked.

EXIT replaces the CANCEL softkey once a lot has been deleted. When the EXIT softkey is pressed, the message "PERM DELETE LOTS" "YES" "NO" shall be displayed. If YES is selected, the propellant lots will be deleted from the MVV-Lot Database. If NO is selected, propellant lots shall not be deleted from the MVV-Lot Database.

If the entry has an asterisk (*) in front of the country code, then that entry has a 5% radial impact error. This error must be considered to ensure accurate fire.

# N-8 AFCS FIRE MISSION - CONTINUED

## N-8.7 System Menus - Continued

N-8.7.15 Muzzle Velocity - Continued

d. To delete muzzle velocity by the date box in DELETE BY DATE and press SELECT.

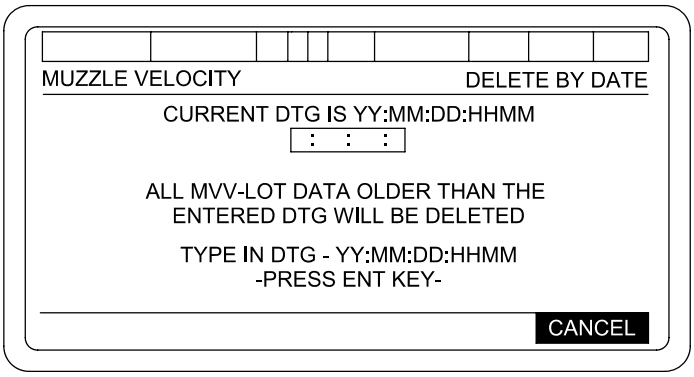


06pc267t

When ENT key is pressed, a validity check is performed on the entered date/time. If the date/time is invalid, you will receive a short error message: “INVALID DTG VALUE” “ACK”. You will be required to enter a new Date/Time value. If the date/time data is valid, a short message “DELETE MVV’ “YES” “NO”. YES causes all MVV Lot data older than the entered DTG to be deleted. NO allows re-entry of the DTG.

e. To update muzzle velocity variation tube wear information, box in MVV-WEAR from the MUZZLE VELOCITY VARIATION screen and press SELECT.

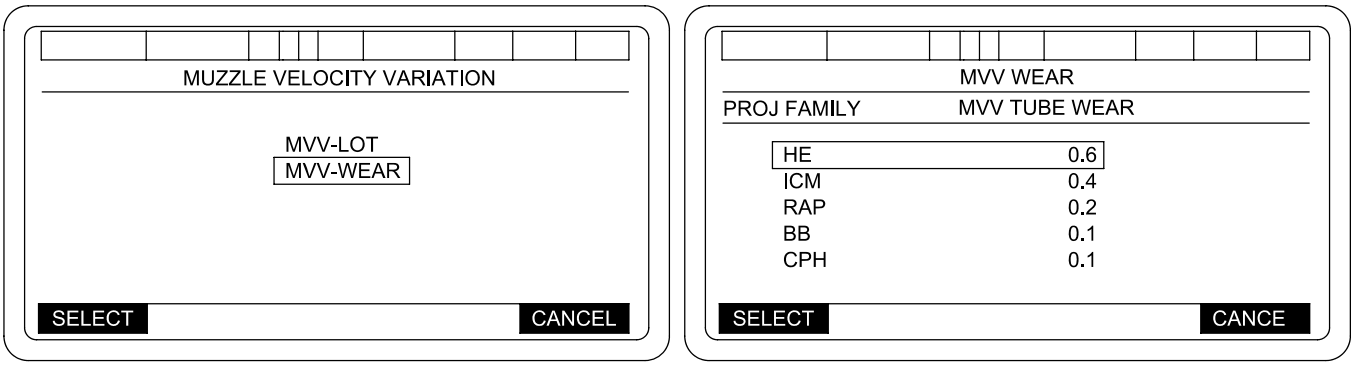


06pc267tb

When an entry has been selected the “+/-” will be displayed at softkey 2. The phrase “ENTER A VALUE BETWEEN -49.9 AND +49.9” and “PRESS ENT KEY” will be displayed. If the value is greater than +/- 49.9, you will receive a short error message: “VALUE TOO BIG” “ACK” or “VALUE TOO SMALL” “ACK”. The value will be returned to the previous value displayed and allow re-entry. when you have updated an entry with a different value, “UPDATE” will be displayed at softkey 2. Press UPDATE. This will update the MVV-Wear database and return to the MUZZLE VELOCITY VARIATION screen.

# N-8 AFCS FIRE MISSION - CONTINUED

## N-8.7 System Menus - Continued

N-8.7.16 Operational Maintenance Transition.

The AFCS will provide the capability for the AFCS operator to transition from NORMAL OPERATIONAL MODE functions to MAINTENANCE MODE functions and back to NORMAL OPERATIONAL MODE without having to POWER DOWN, perform SYSTEM RESTART, or perform NORMAL OPERATIONAL MODE initialization procedures. This capability will only be available when the AFCS has successfully completed an NORMAL OPERATIONAL MODE initialization. Selection of the MAINTENANCE MODE from the AFCS MODE SELECTION display will not allow the AFCS operator to transition to NORMAL OPERATIONAL MODE without first having to POWER DOWN, perform SYSTEM RESTART, or do a NORMAL OPERATIONAL MODE “INITIALIZATION” procedure.

When MAINTENANCE MODE functions are selected from the AFCS NORMAL OPERATIONAL MODE, the PDIU will be directed to limit instructive testing to only respond to Fire Mission requests. When MAINTENANCE MODE is entered from the AFCS SELECT OPERATIONAL MODE display, the PDIU will be allowed to perform its full range of intrusive tests.

If a Fire Mission is received while the AFCS is in a MAINTENANCE MODE function which was activated from the NORMAL OPERATIONAL MODE, the operator will be prompted to either accept or reject the mission. NORMAL OPERATIONAL acceptance of the mission will automatically terminate all MAINTENANCE MODE function activity and transition to NORMAL OPERATIONAL MODE Fire Mission processing. Operator rejection of the mission will cause an operator ABORT of the Fire Mission and will cause the AFCS to remain in the currently active MAINTENANCE MODE function.

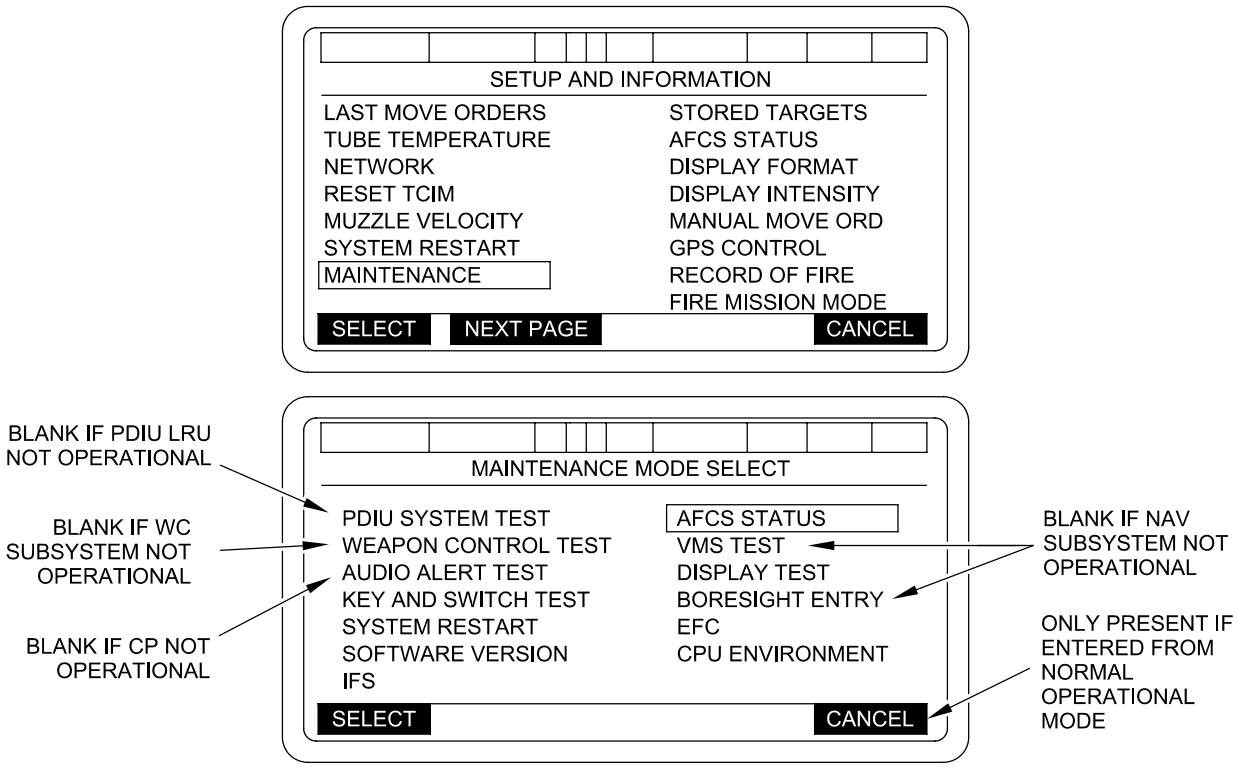

# N-9 AFCS AND PDIU FAULT DETECTION.

## N-9.1 Power Up Built-In-Test (BIT).

The BIT is a self-test of the AFCS. This test occurs when the vehicle MASTER power is ON and the AFCS POWER switch (located on the DU), is placed to ON. By placing the AFCS POWER switch and PCU circuit breakers to ON, the DU will display the screen shown.

As each of the nine subsystems is tested, the "--" will change and provide a subsystem condition. An OK condition (see illustration below), indicates a subsystem is 100% functional.

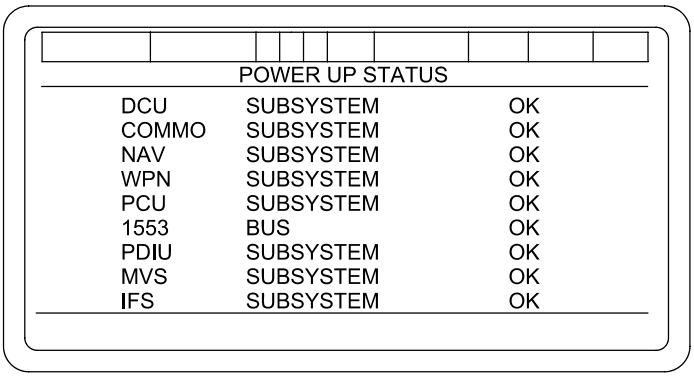


06pc244tb

**NOTE**

If DCU contains an incorrect configuration, the AFCS will not allow the operator to select normal operations until a correct DCU software configuration is downloaded.

When configuration verification checking indicates that the executed software configuration is not the same as the acquired software configuration, a short error message "INVALID SOFTWARE CONFIGURATION" "ACK" will appear on the softkey label line of the DU.

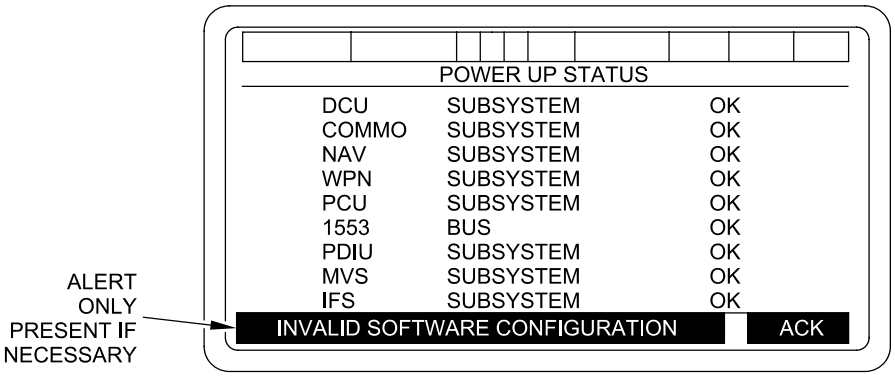


06pc245tc

When the message is acknowledged, the AFCS will proceed to the SELECT OPERATIONAL MODE menu. To view detailed software configuration information for each LRU, MAINTENANCE should be selected, IAW procedure in para N-9.2.

# N-9 AFCS AND PDIU FAULT DETECTION - CONTINUED

## N-9.1 Power Up Built-In-Test (BIT) - Continued

The display shown in the example below illustrates two conditions, DEGRADED and OUT.

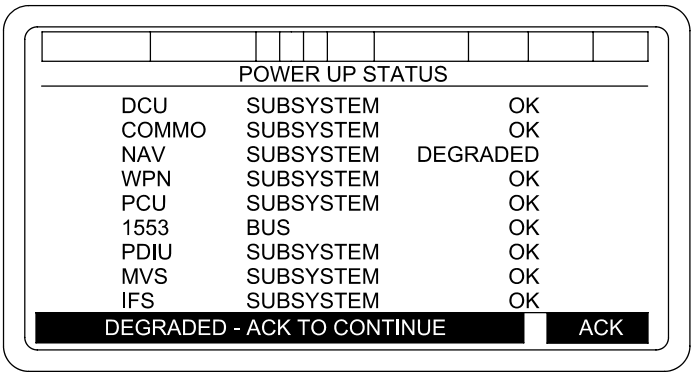


06pc244td

The DEGRADED condition indicates a subsystem is not 100% functional. When a degraded condition exists, it will be indicated in field 7 by one or a combination of these letters with the following meaning:

N - Navigation
A - GPS Aiding
C - Communication Processing
W - Weapon Controller

These two conditions, OUT and DGRD, will be tested to determine where the fault exists and the extent of the fault. After a fault has been detected (OUT or DGRD condition during self-test) press the illuminated softkey beneath the word ACK. After pressing the ACK key, the screen shown below will be displayed.

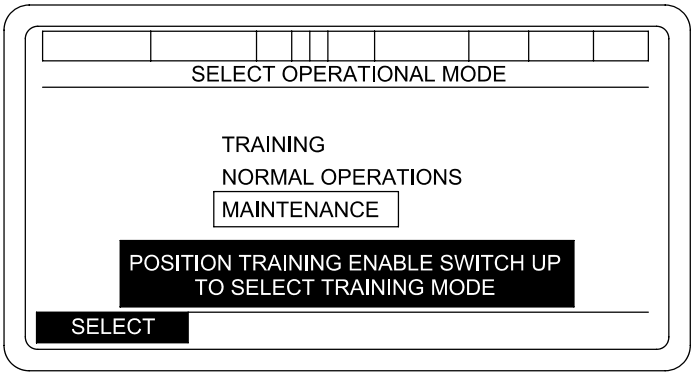


06pc567ma

The display above depicts three modes: TRAINING, NORMAL OPERATION and MAINTENANCE. To select MAINTENANCE MODE, box in MAINTENANCE as shown in the illustration above. Press illuminated softkey beneath the word SELECT to enter maintenance mode master menu.

# N-9 AFCS AND PDIU FAULT DETECTION - CONTINUED

## N-9.1 Power Up Built-In-Test (BIT) - Continued

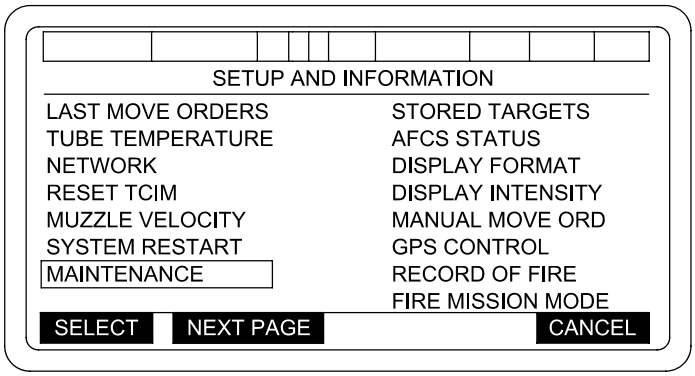


06pc278t

The AFCS also provides the capability for the AFCS operator to transition from Normal Operational Mode functions to Maintenance Mode functions and back to Normal Operational Mode without having to perform a power down sequence, system restart, or Normal Operational Mode initialization procedures. This capability shall only be available when the AFCS has successfully completed an Normal Operational Mode initialization. Selection of the Maintenance Mode from the AFCS Mode Selection display shall not allow the AFCS operator to transition to Normal Operational Mode without first performing either a power down sequence or a system restart.

When Maintenance Mode functions are selected from the AFCS Operational Mode, the PDIU shall be directed to limit intrusive testing to only those tests which will not impact the ability of the AFCS to quickly respond to fire mission requests. When Maintenance Mode is entered from the AFCS Mode Selection display, the PDIU shall be allowed to perform its full range of intrusive tests.

If a fire mission is received while the AFCS is in a Maintenance Mode function which was activated from the Operational Mode, the operator shall be prompted to either accept or reject the mission. Operator acceptance of the mission shall automatically terminate all Maintenance Mode function activity and transition to Normal Operational Mode fire mission processing. Operator rejection of the mission shall cause an operator abort of the fire mission and shall cause the AFCS to remain in the currently active Maintenance Mode function.

# N-9 AFCS AND PDIU FAULT DETECTION - CONTINUED

## N-9.2 AFCS Status.

To display the AFCS STATUS menu:

a. Select MAINTENANCE from the SETUP AND INFORMATION menu. Press SELECT key. This will cause the MAINTENANCE MODE SELECT menu to be displayed.

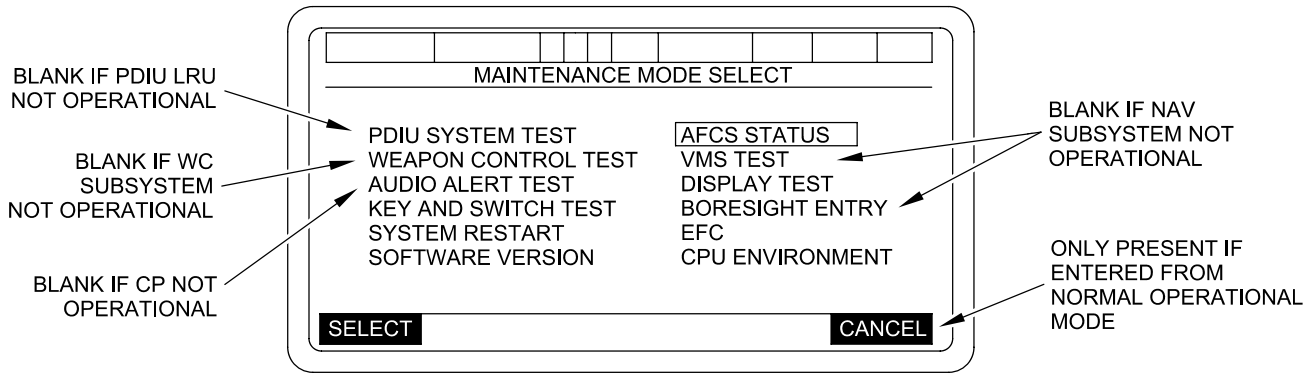


06pc122tb

If MAINTENANCE is selected from NORMAL OPERATIONAL MODE, the MAINTENANCE screen will display SELECT and CANCEL options above softkeys 1 and 4 in field 16.

b. Select AFCS STATUS from the MAINTENANCE MODE SELECT menu. Press SELECT key. This will cause the AFCS STATUS menu to be displayed.

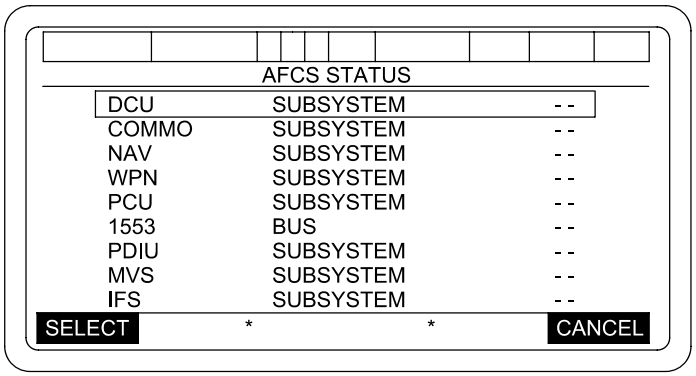


06pc120ta

The AFCS STATUS menu will display the various subsystem faults. Using this fault list (showing Degraded Mode of each subsystem), you will be able to determine if Degraded Mode is acceptable depending on mission requirements.

# N-9 AFCS AND PDIU FAULT DETECTION - CONTINUED

## N-9.2 AFCS Status - Continued

Certain degraded subsystems will not interfere with AFCS operation or mission capability. It is important to know, however, which subsystem is degraded (and which BIT item has failed). Knowing which failure to compensate for/correct will allow you to carry on with your mission. The various LRUs communicate/send messages periodically within AFCS. Whenever an LRU has not sent a message within a certain amount of time, the LRU timer sends an LRU FAILED message. In the event you get an LRU FAILED message, go into MAINTENANCE menu, check AFCS STATUS. If LRU failed, notify unit maintenance.

The AFCS STATUS menu is used by unit maintenance personnel, as well as by the operator. The operator must notify unit maintenance of any subsystem listed with a status of DEGRADED or OUT, then no faults within that subsystem are indicated. Look at each subsystem carefully.

Select the subsystem in question. Additional information will be displayed to identify where the fault lies.

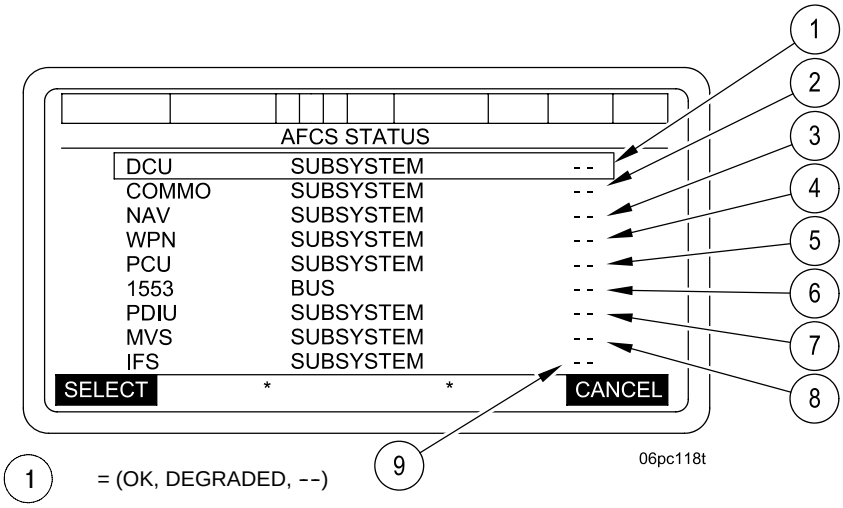


(1) = (OK, DEGRADED, --)

(2) = (OK, DEGRADED, --)

(3) = (OK, DEGRADED, --)

(4) = (OK, DEGRADED, --)

(5) = (OK, DEGRADED)

(6) = (OK, DEGRADED, --)

(7) = (OK, --)

(8) = (OK, --)

(9) = (--)

SELECT = SELECT A SUBSYSTEM

CANCEL = CANCEL and return to SETUP AND INFORMATION menu or INTERNAL MAINTENANCE menu

* = No test appears for these softkeys. Pressing FUNCTION KEY 2 or 3 will clear ET SIMULATED FAILURES

06pc118t

# N-9 AFCS AND PDIU FAULT DETECTION - CONTINUED

## N-9.2 AFCS Status - Continued

N-9.2.1 DCU SUBSYSTEM STATUS Display.

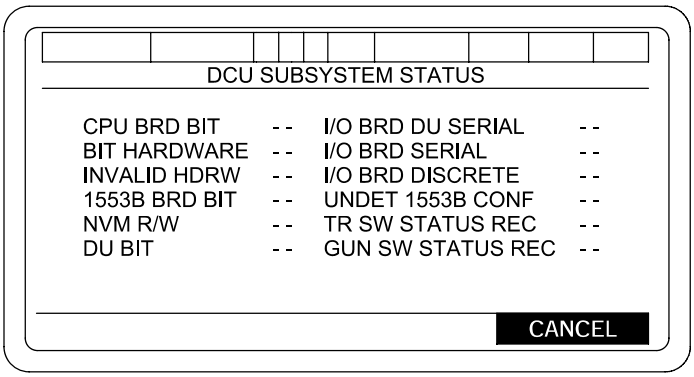


06pc119ta

- - = (OK, FAIL)

CANCEL = Return to the AFCS STATUS display

N-9.2.2 COMMO SUBSYSTEM STATUS Display.

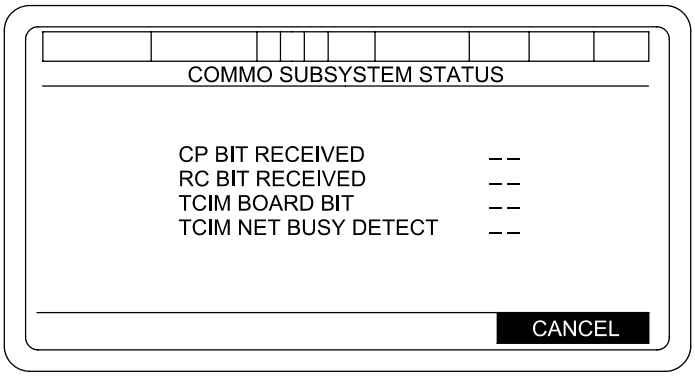


_ _ = (OK, FAIL)

CANCEL = Return to the AFCS STATUS display

06pc121ta

# N-9 AFCS AND PDIU FAULT DETECTION - CONTINUED

## N-9.2 AFCS Status - Continued

N-9.2.3 NAV SUBSYSTEM STATUS Display.

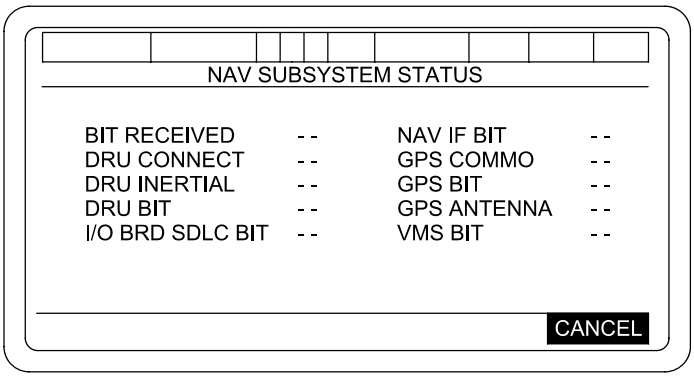


06pc124ta

- - = (OK, FAIL)

CANCEL = Return to the AFCS STATUS display

N-9.2.4 WPN SUBSYSTEM STATUS Display.

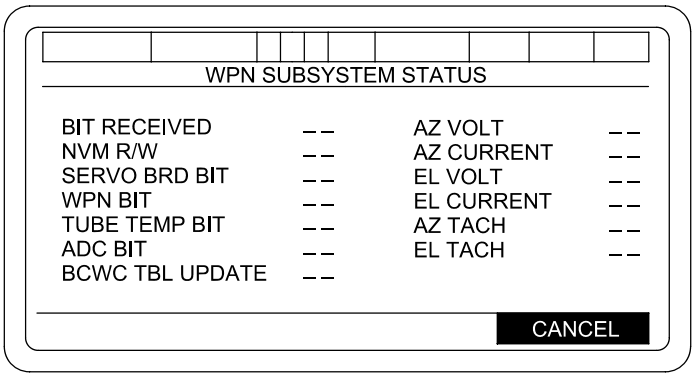


_ _ = (OK, FAIL)

CANCEL = Return to the AFCS STATUS display

06pc125tb

# N-9 AFCS AND PDIU FAULT DETECTION - CONTINUED

## N-9.2 AFCS Status - Continued

N-9.2.5 PCU SUBSYSTEM STATUS Display.

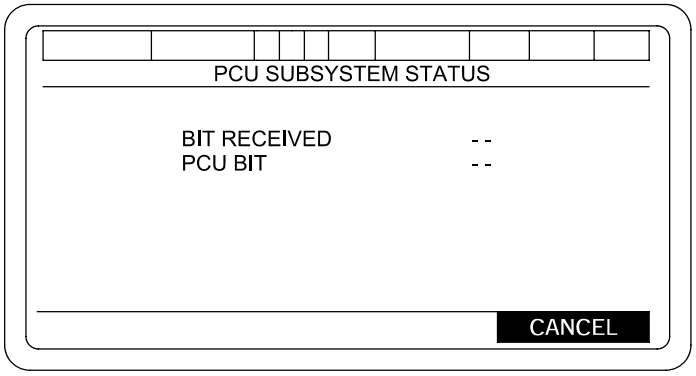


06pc126ta

- - = (OK, FAIL)

CANCEL = Return to the AFCS STATUS display

N-9.2.6 1553 BUS STATUS Display.

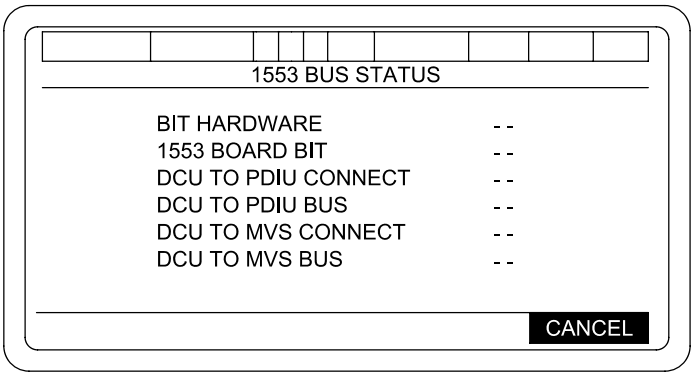


- - = (OK, FAIL)

CANCEL = Return to the AFCS STATUS display

06pc127ta

# N-9 AFCS AND PDIU FAULT DETECTION - CONTINUED

## N-9.2 AFCS Status - Continued

N-9.2.7 PDIU SUBSYSTEM STATUS Display.

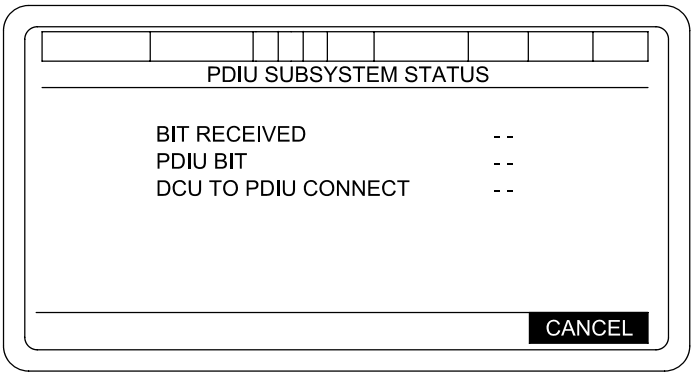


06pc128tc

- - = (OK, FAIL)

CANCEL = Return to the AFCS STATUS display

N-9.2.8 MVS SUBSYSTEM STATUS Display.

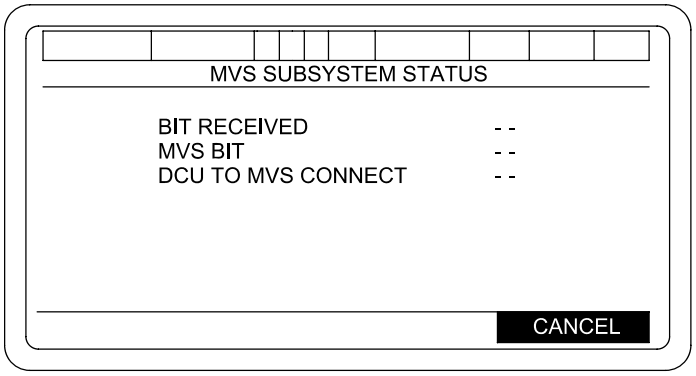


06pc129ta

- - = (OK, FAIL)

CANCEL = Return to the AFCS STATUS display

# N-9 AFCS AND PDIU FAULT DETECTION - CONTINUED

## N-9.3 PDIU System Test.

To start the PDIU SYSTEM TEST, move the cursor with the arrow keys until the PDIU SYSTEM TEST is boxed, as shown below.

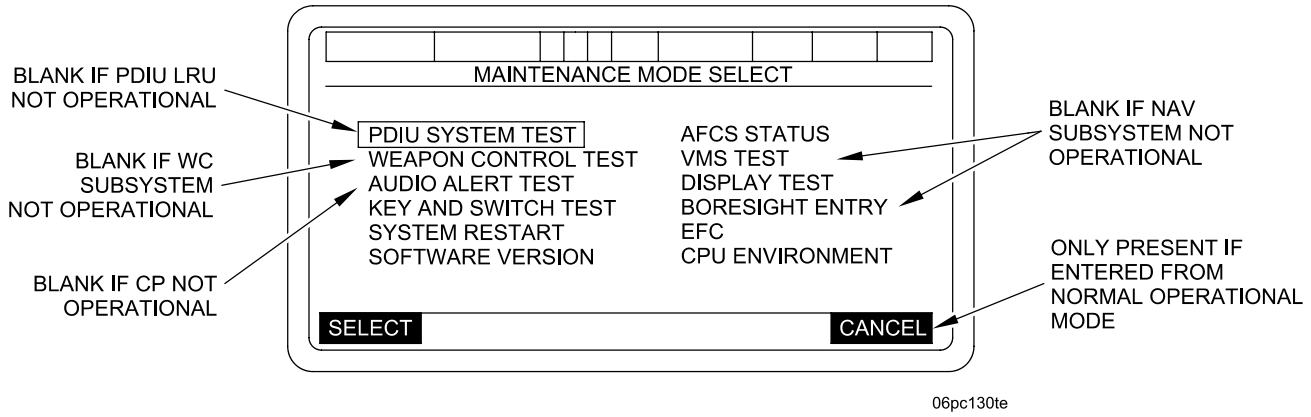


Press SELECT. The screen will display the prompt “ARE YOU SURE”, YES OR NO. Press “YES”. The screen will display the following message:

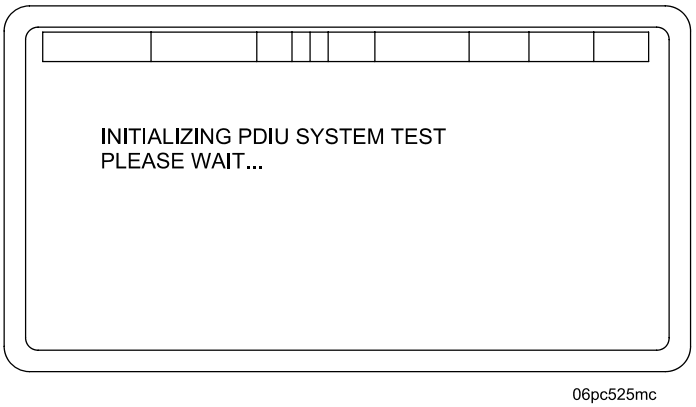


This message requires no action on your part. In 3 to 5 seconds, when the system is ready, it will be replaced with a menu display like the following:

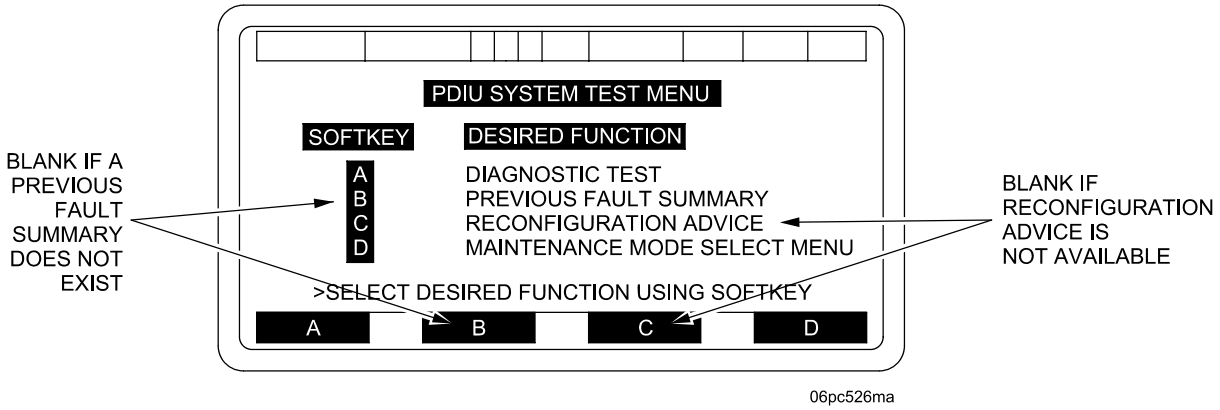


This menu allows you to select whichever function you wish to perform.

# N-9 AFCS AND PDIU FAULT DETECTION - CONTINUED

## N-9.3 PDIU System Test - Continued

### NOTE

The previous Fault Summary and Reconfiguration Advice functions are not always available. These options will not be displayed if their functions cannot be performed. (The different menu screens that can be seen because of this are shown at the end of the description.)

Each of the four functions will now be described separately.

a. DIAGNOSTIC TEST

To perform DIAGNOSTIC TEST, press the A softkey.

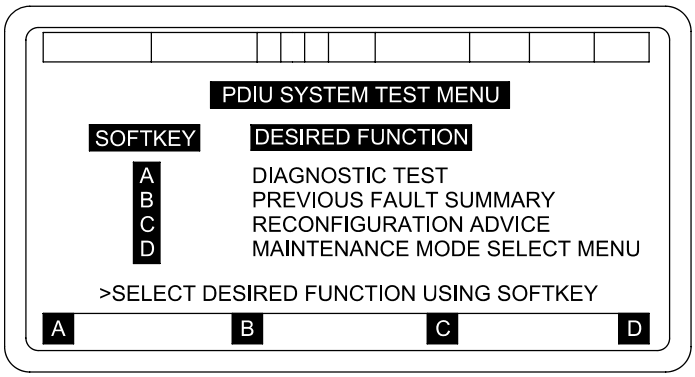


06pc527ma

The next screen allows you to select which part of the system you would like to test based upon the problem you are troubleshooting. The Gun Positioning System will not be available until the hydraulics segment has been successfully tested (the PDIU should not be reset). To test the entire system, all four segments should be tested in the order they appear on the screen. As each segment passes its test, the next segment should be selected from this screen without resetting the system. If any of the segmented tests fail, the fault should be corrected, the AFCS should be reset and the testing should begin again with the first test. Continuing testing without resetting the system can result in false failures.

To perform any of the segment tests select YES when that segment appears behind CHOOSE OPTION.

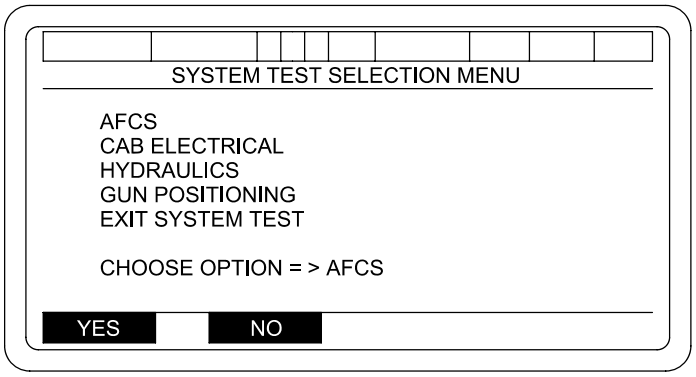


06pc377mb

# N-9 AFCS AND PDIU FAULT DETECTION - CONTINUED

## N-9.3 PDIU System Test - Continued

The following screen will be displayed.

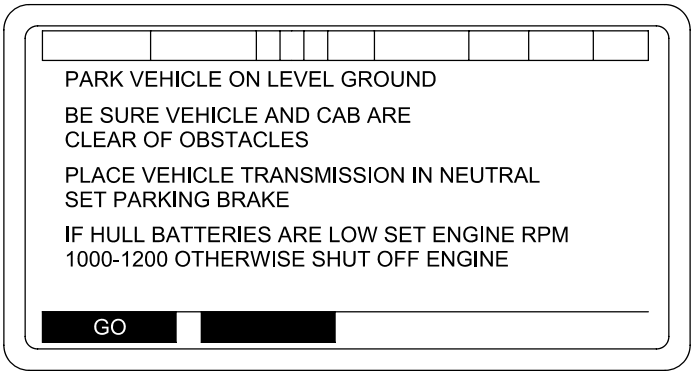


06pc378ma

When you have completed the required actions, press GO softkey and testing will continue.

During the next few screens, you will be given the CANCEL softkey option. CANCEL is there in case you selected the DIAGNOSTIC TEST function (from the menu) by mistake or in case you changed your mind. When you press CANCEL, the system will display the PDIU SYSTEM TEST MENU again.

Throughout diagnostic testing, you will be given instructions. When you press GO, you are telling the system that you have done the task it asked for. It is important that you complete the task before pressing GO because many of the decisions that the system makes are based on the actions that you made. A typical instruction is shown below:

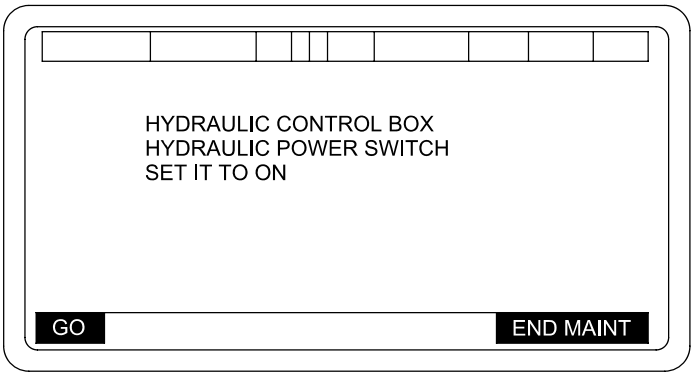


06pc411ma

When you are instructed to perform an action such as the screen below, the PDIU measures the voltage of the switch.

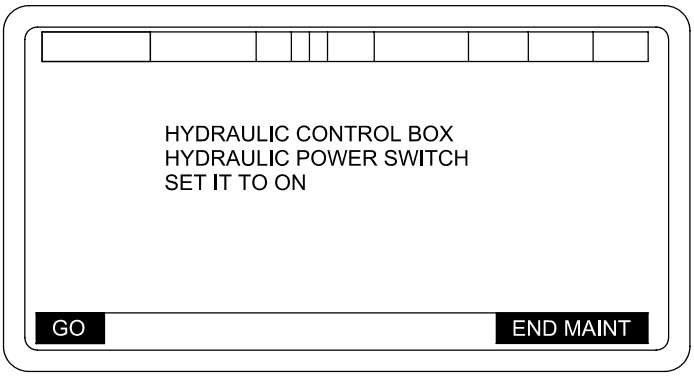


06pc408ma

# N-9 AFCS AND PDIU FAULT DETECTION - CONTINUED

## N-9.3 PDIU System Test - Continued

If the result is not correct, then you are asked if you performed the action correctly, as shown in the screen below.

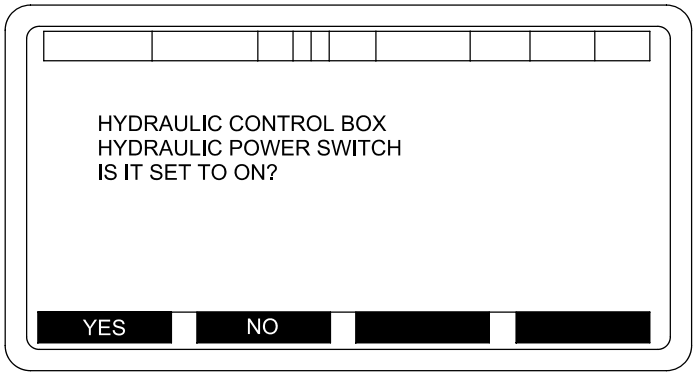


06pc409ma

If you answer YES, a fault will be detected by the PDIU. If you answer NO, you will be given another chance to perform the action correctly. Then, if the action is not performed correctly, a fault will be detected by the PDIU.

Most of the displays in the main section of the DIAGNOSTIC TEST will include an END MAINT softkey at the bottom of the display. When this is present, you have the option of stopping the test at that point. If you press END MAINT, testing will immediately stop and you will see the Fault Summary display with all of the test results up to where you stopped. This feature is provided to allow you to return to normal operations with a minimum of delay if necessary. REMEMBER - When you press END MAINT, the system can only report the results of the test up to where you stopped. There may be further faults not detected.

During diagnostic testing, you will also be asked to answer questions. A typical question is shown below:

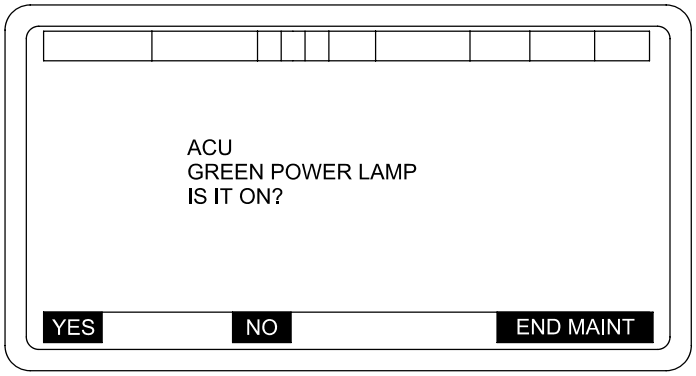


06pc407mh

Questions will always be asked so that a YES or NO answer is possible by pressing the YES or NO softkeys. The system is using your ability to see, feel and hear to get the information it needs. It uses your answers to make decisions about functions that cannot be measured directly by the PDIU.

# N-9 AFCS AND PDIU FAULT DETECTION - CONTINUED

## N-9.3 PDIU System Test - Continued

Several times during diagnostic testing, you will see messages that start with the words “TEST IN PROGRESS” like the following screen:

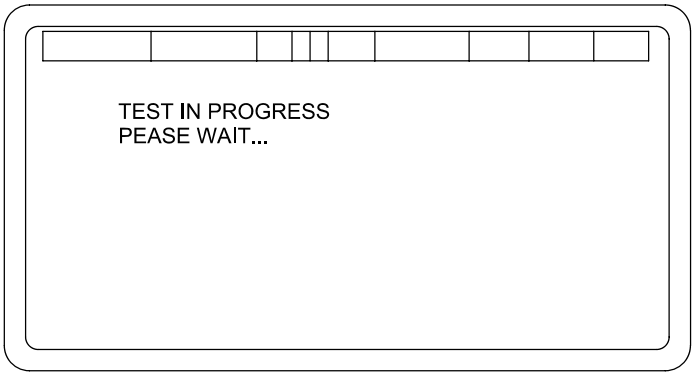


06pc259ma

These screens have no labels for the softkeys at the bottom of the screen and require no response. They are intended to let you know that the system has recognized your last response and is busy with a long test operation. When it is ready to continue, the display will automatically change to a question or instruction message

Most faults will be isolated as far as possible by the PDIU during the normal sequence of DIAGNOSTIC TEST. Usually, the test sequence will run to completion and display the Fault Summary screen. However, some faults can be isolated further. This requires extra testing which can involve disconnecting cables and opening the hydraulic compartment. When one of these faults is detected, the system will remember it until it has finished all of the fault detection tests. It will then display a special menu screen like the following:

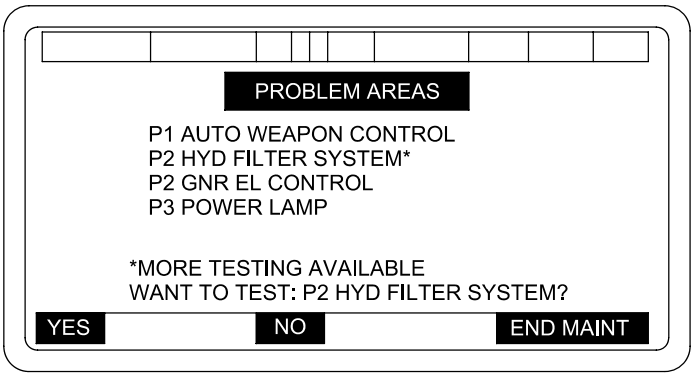


06pc531ma

Each of the problem areas that requires extra testing will be displayed with an asterisk (*). The question line at the bottom will have the same name of the first extra test problem area. You can choose to continue testing this problem area by pressing YES. If you press NO, the name of the next extra test problem area will appear. As long as you continue to press NO, the names of the * problem areas will appear in the question, one at a time. If you decide not to do any of the extra testing, press END MAINT and the system will immediately display the Fault Summary.

# N-9 AFCS AND PDIU FAULT DETECTION - CONTINUED

## N-9.3 PDIU System Test - Continued

If you press the YES softkey for one of the problem areas, testing will continue with instructions and questions until the fault has been isolated as far as possible by the PDIU. When the extra testing is complete, you will see a screen like the following:

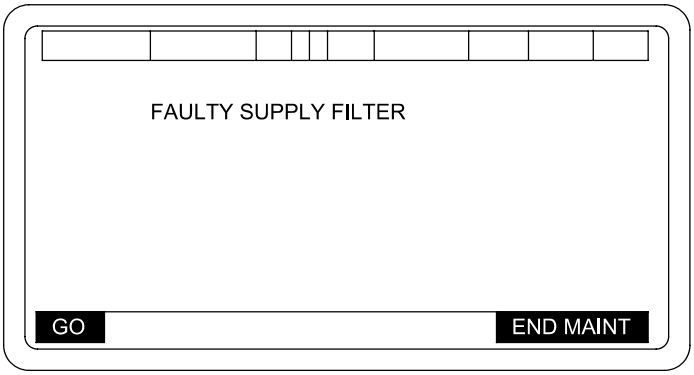


06pc532ma

This screen may show one faulty LRU or a short list of possible faulty LRUs that must be isolated further by manual troubleshooting procedures. It tells you that the PDIU has done all of the testing it can. When you press GO, the Fault Summary screens will begin.

The first screen of the Fault Summary sequence will be definition of the Fault Priority Codes assigned to each fault message.

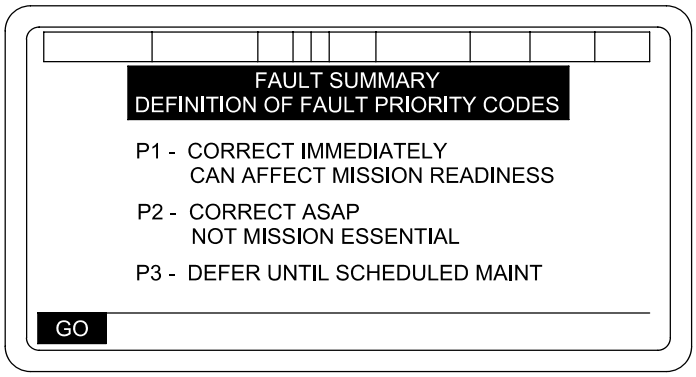


06pc533ma

P1 - These faults require immediate attention. You have lost or may soon lose a major system function that may affect your mission capabilities.

P2 - These faults do not immediately affect your mission readiness but should be corrected as soon as possible.

P3 - These faults can be deferred until a scheduled maintenance period.

# N-9 AFCS AND PDIU FAULT DETECTION - CONTINUED

## N-9.3 PDIU System Test - Continued

The fault definition screen is followed by a Fault Summary list like the one shown on the next screen.

**NOTE**

All of the information in the Fault Summary screens should be reported to Unit Maintenance. It is a good idea to copy the list of problems and possible faults before pressing GO. If you forget or don't have time to copy all the information now, it can be redisplayed by selecting the Previous Fault Summary option in the PDIU SYSTEM TEST MENU screen the next time it is displayed, even if power has been removed.

Press the GO softkey to continue.

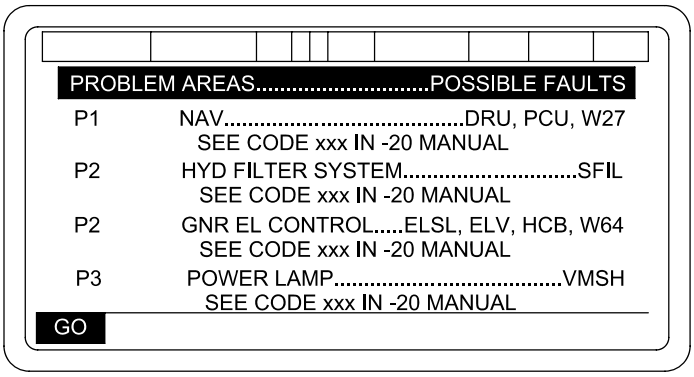


06pc534ma

The Fault Summary screens are a list of all of the problems found during screen DIAGNOSTIC TEST. When no problems have been detected, this will simply say "NO FAULTS FOUND" and the Definition of Fault Priority Codes screen will not be shown. However, when problems have been detected, a list like the one above will appear.

When the Fault Summary displays problem areas, it also displays a list of possible faulty LRUs for each problem area and a -20 manual code number. When only one LRU is listed for a problem area, DIAGNOSTIC TEST has determined that the LRU is definitely faulty and must be replaced. When more than one LRU (separated by commas) is listed as a possible fault for a problem area, further isolation by Unit Maintenance is required to determine which one of the LRUs listed is faulty.

The code number (xxx) listed in the "SEE CODE XXX IN -20 MANUAL" message is a reference to an index in the -20 manual which lists the page where the correct manual troubleshooting procedure can be found.

# N-9 AFCS AND PDIU FAULT DETECTION - CONTINUED

## N-9.3 PDIU System Test - Continued

The Fault Summary list can take up to three screens. When you have finished viewing or copying the information on each Fault Summary screen, press GO to continue. If more faults were detected, the next Fault Summary screen will be displayed. Some faults may not appear due to limited space on the screens. After corrective actions have been accomplished, the test should be re-run to ensure no additional faults are detected. If Reconfiguration Advice is available for the detected faults, you will be asked the following question:

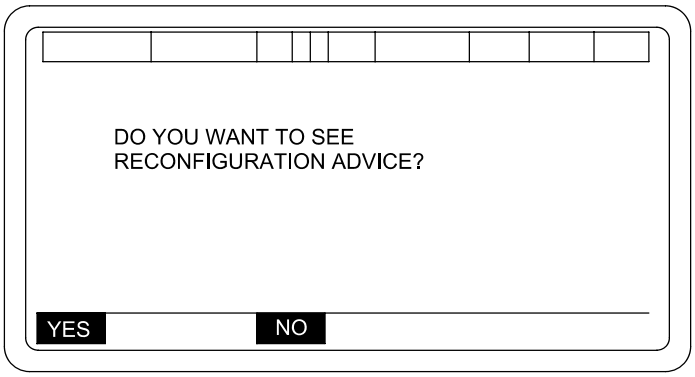


06pc535ma

This screen offers you the chance to get further information on what backup modes of operation are available for subsystems that are not operational. If you press YES, a screen like the following will appear:

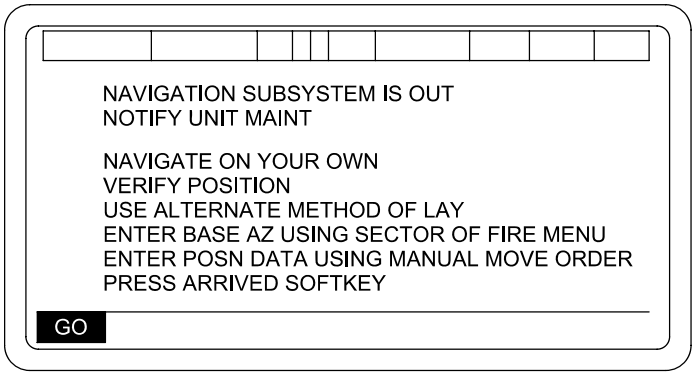


06pc536ma

# N-9 AFCS AND PDIU FAULT DETECTION - CONTINUED

## N-9.3 PDIU System Test - Continued

Reconfiguration Advice may take more than one screen depending on which (and how many) subsystems are not operational. After you have read each screen, press the GO softkey to continue.

After all Reconfiguration Advice messages have been read, you will be given two screens of instructions that will return the vehicle to a given state. At this point, testing is complete. When you press the final GO, the screen will display the PDIU SYSTEM TEST MENU again.

General Notes About DIAGNOSTIC TEST

The sequence of messages and displays that you see during DIAGNOSTIC TEST will vary depending on the number of faults present in the vehicle. The system will choose its own path through the tests and guide you with instructions. Don't be concerned if you see messages and questions you haven't seen before. The system is simply troubleshooting a fault you haven't had before.

b. PREVIOUS FAULT SUMMARY

To view the PREVIOUS FAULT SUMMARY, press the B softkey.

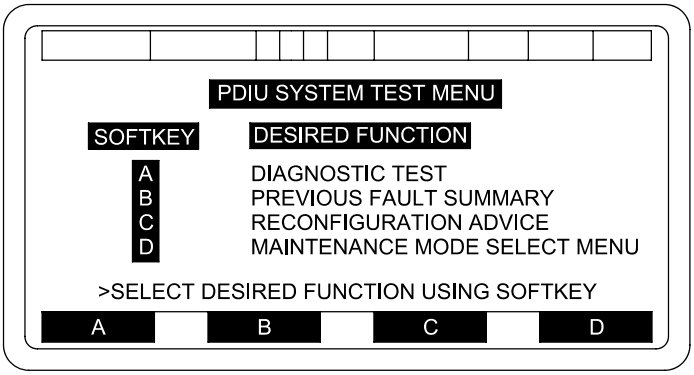


06pc527mc

The PREVIOUS FAULT SUMMARY is a list of all the problems found during the last DIAGNOSTIC TEST performed. If no problems were detected, the following message will be displayed:

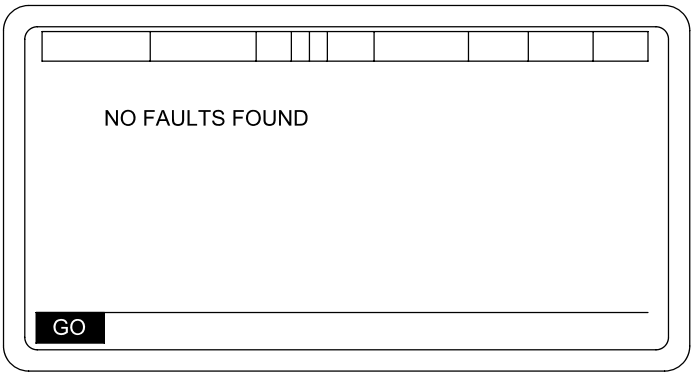


06pc537ma

# N-9 AFCS AND PDIU FAULT DETECTION - CONTINUED

## N-9.3 PDIU System Test - Continued

If the last DIAGNOSTIC TEST was aborted before completion, you will also see the following message:

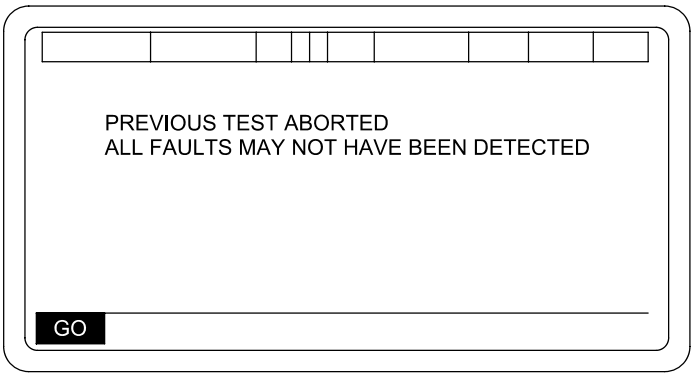


06pc538ma

When all screens in the Previous Fault Summary display sequence have been viewed, the PDIU SYSTEM TEST MENU will automatically be displayed again.

c. RECONFIGURATION ADVICE

To view Background Monitoring Mode RECONFIGURATION ADVICE, press the C softkey.

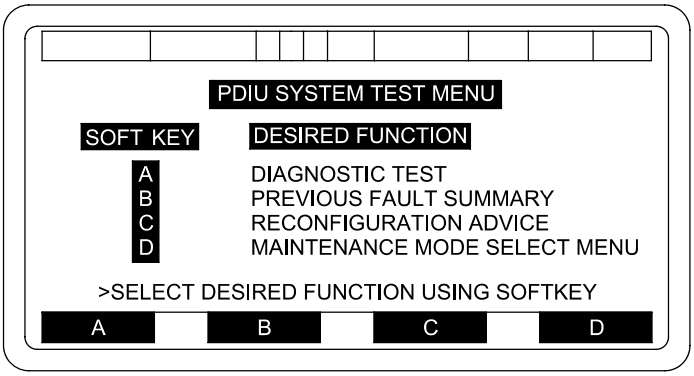


06pc527mc

A screen like the following will be displayed:

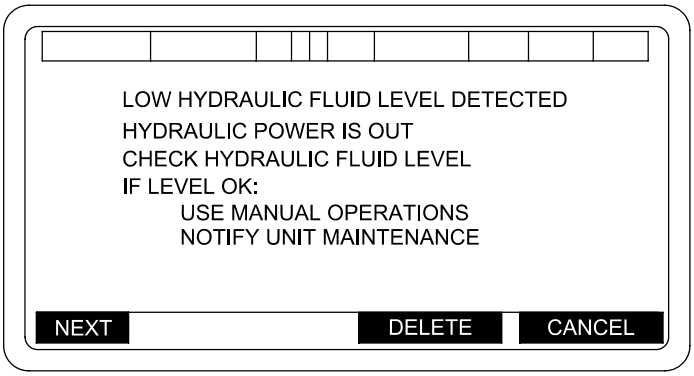


06pc539ma

# N-9 AFCS AND PDIU FAULT DETECTION - CONTINUED

## N-9.3 PDIU System Test - Continued

RECONFIGURATION ADVICE offers you the opportunity to get more information on what Backup Modes of Operation are available for subsystems that are not operational. This information is displayed for each warning message sent to the DCU during Normal Operations. RECONFIGURATION ADVICE can take several screens to display as each warning message/advisory information is displayed on a separate screen. You can cycle through and delete the messages as desired.

If you press NEXT, the next warning message and its advisory information will be displayed. If you press DELETE, the warning message and its advisory information displayed will be deleted and the next warning message will appear.

Throughout RECONFIGURATION ADVICE, the CANCEL softkey is available to you. If you press CANCEL, you will exit from RECONFIGURATION ADVICE and the PDIU SYSTEM TEST MENU will be displayed again.

After all messages have been viewed, the following display will appear:

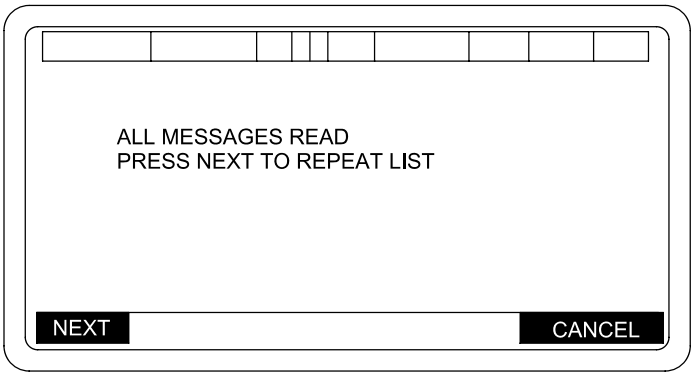


06pc540ma

You can press NEXT to cycle through all the messages which were not deleted. Or press CANCEL to exit.

When the last message is displayed and there are no more messages to view, a display like the following will appear:

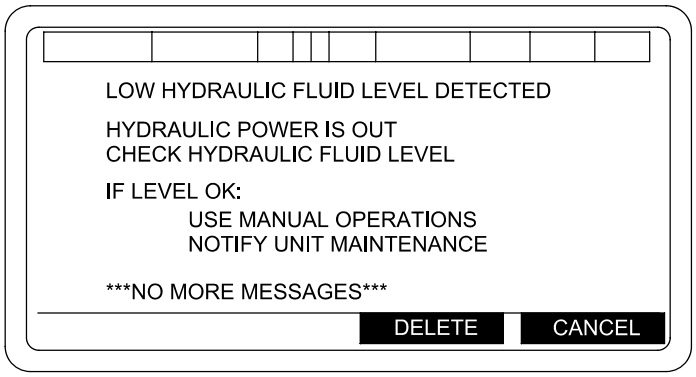


06pc541ma

If you press DELETE, the warning message and its advisory information will be deleted and the PDIU SYSTEM TEST MENU will be displayed again.

# N-9 AFCS AND PDIU FAULT DETECTION - CONTINUED

## N-9.3 PDIU System Test - Continued

d. MAINTENANCE MODE SELECT MENU

To exit from PDIU SYSTEM TEST, press the D softkey.

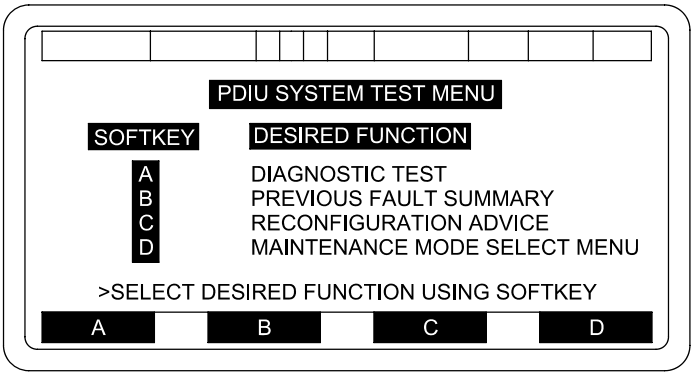


06pc527mc

Pressing D will terminate PDIU SYSTEM TEST and the MAINTENANCE MODE SELECT menu screen will appear. The PDIU will automatically enter into its Background Monitoring Mode.

e. PDIU SYSTEM TEST MENU VARIATIONS

The following screens show all of the different menus that can be displayed when entering the PDIU SYSTEM TEST. As mentioned above, all options are not always available. An option will not be displayed if its function cannot be performed.

In the following screen, all options are available to the user.

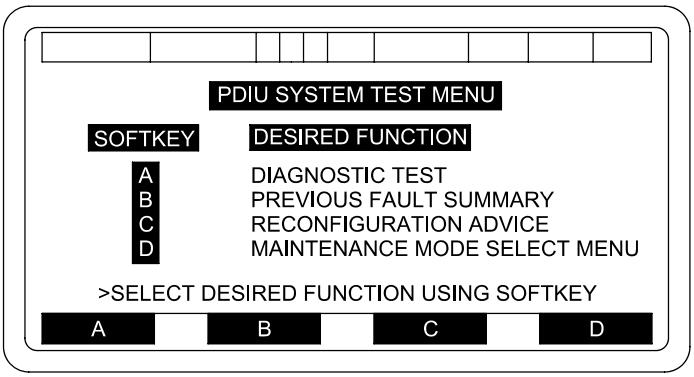


06pc527mc

# N-9 AFCS AND PDIU FAULT DETECTION - CONTINUED

## N-9.3 PDIU System Test - Continued

The RECONFIGURATION ADVICE option is missing from the following menu screen. RECONFIGURATION ADVICE will only be available for warning messages sent to the DCU during Normal Operations and for certain faults detected by the AFCS.

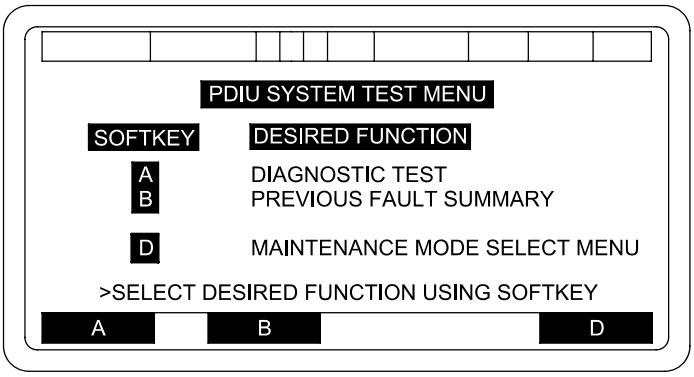


06pc542mc

The PREVIOUS FAULT SUMMARY option is missing from the following menu screen. A PREVIOUS FAULT SUMMARY will only be available if the last DIAGNOSTIC TEST performed was aborted while in progress and faults had been detected or if the last DIAGNOSTIC TEST was completed.

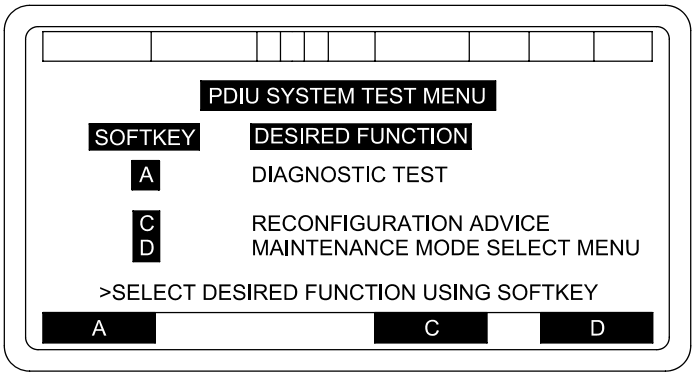


06pc543mc

# N-9 AFCS AND PDIU FAULT DETECTION - CONTINUED

## N-9.3 PDIU System Test - Continued

Both the PREVIOUS FAULT SUMMARY and RECONFIGURATION ADVICE options are missing from the following menu screen. Neither of these options can be performed. DIAGNOSTIC TEST and MAINTENANCE MODE SELECT MENU options will always be available.

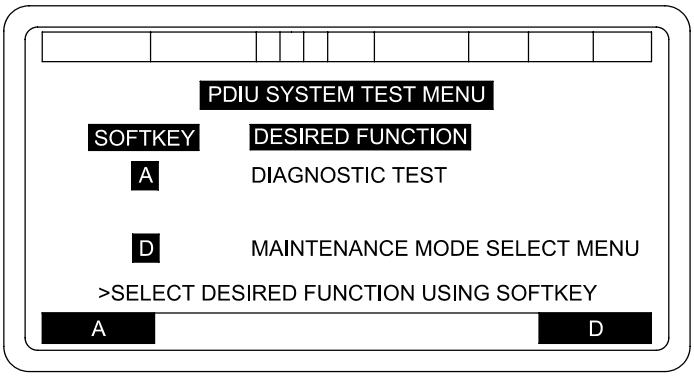


06pc546mc

DIAGNOSTIC TEST is the way you perform all diagnostic testing.

MAINTENANCE MODE SELECT MENU is the way you end PDIU system testing and return to AFCS operations.

# N-9 AFCS AND PDIU FAULT DETECTION - CONTINUED

## N-9.4 Weapon Control Test.

This test checks the elevation and azimuth tachometers which control the speed of the gun tube and cab movement during automatic positioning; LOAD, LAY and STOW.

This test SHOULD NOT be performed in accordance with the standard vehicle setup condition. Vehicle setup conditions for THIS test are:

a. Park vehicle with transmission in neutral, engine running.

b. Set parking brakes.

c. Remove gun tube from travel lock and place travel lock in lower/unlock position.

d. Unlock cab traverse lock.

e. Set DCU POWER switch to ON.

f. Place hydraulic control box POWER switch to ON.

g. Set GUN SERVO switch to ON.

This test will be used when directed by troubleshooting procedures, or when the tachometers appear to malfunction.

If test results indicate tachometer malfunctions, notify unit maintenance personnel for corrective actions.

Elevating gun tube will cause numbers to appear/change (as CHIEF OF SECTION control handles are elevated) in EL TACH box. If numbers do not change/move, your TACH is not working.

Select WEAPON CONTROL TEST from MAINTENANCE MODE SELECT menu.

The first menu to be displayed will be the WEAPON CONTROL INSTRUCTIONS menu and may contain two pages of instructions. The second display will be the WEAPON CONTROL TEST BEGIN menu followed by several WEAPON CONTROL TEST menus.

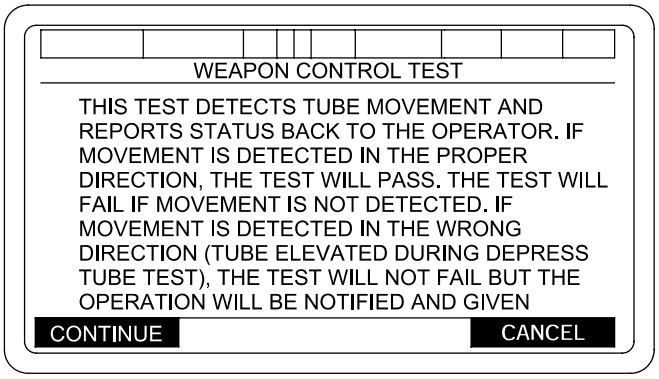


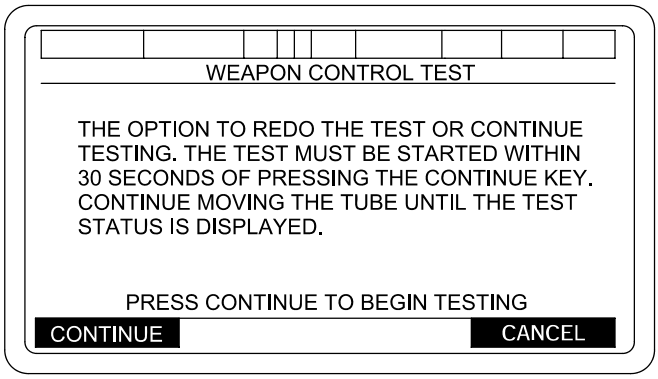


06pc131ta

# N-9 AFCS AND PDIU FAULT DETECTION - CONTINUED

## N-9.4 Weapon Control Test - Continued

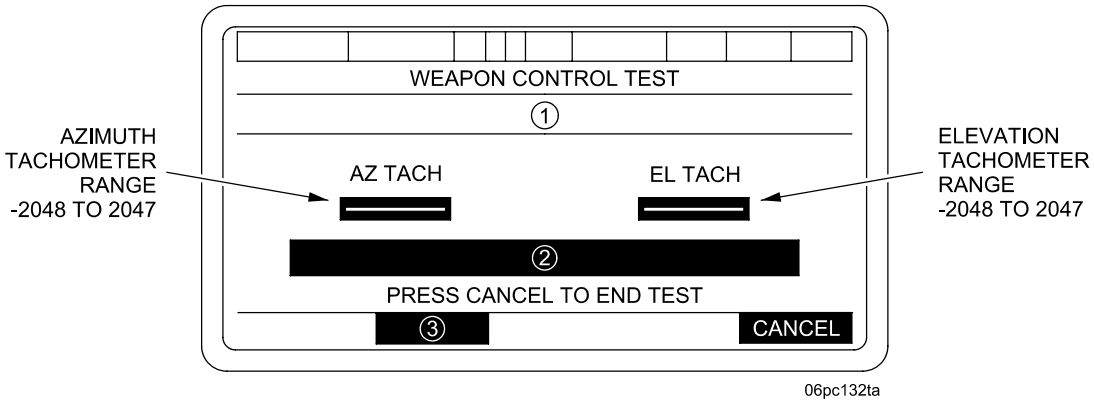


3 CONTINUED: Go to next text phase
REDO: Rerun the current test phase
CANCEL: End the test

Table N-19 shows messages displayed in Fields 1 and 2 for the beginning of the WEAPON CONTROL TEST. Table N-20 shows WEAPON CONTROL TEST status messages.

**Table N-19. Weapon Control Test Display**

| TEST PHASE | 1 | 2 |
|---|---|---|
| 1 | "ELEVATE TUBE TEST" | "ELEVATE TUBE APPROX 100 MILS" |
| 2 | "DEPRESS TUBE TEST" | "DEPRESS TUBE APPROX 100 MILS" |
| 3 | "TRAVERSE TUBE RIGHT TEST" | "TRAVERSE TUBE RIGHT APPROX 100 MILS" |
| 4 | "TRAVERSE TUBE LEFT TEST" | "TRAVERSE TUBE LEFT APPROX 100 MILS" |

Elevating gun tube will cause numbers to appear/change (as CHIEF OF SECTION control handles are elevated) in EL TACH box. If numbers do not change/move, your TACH is not working.

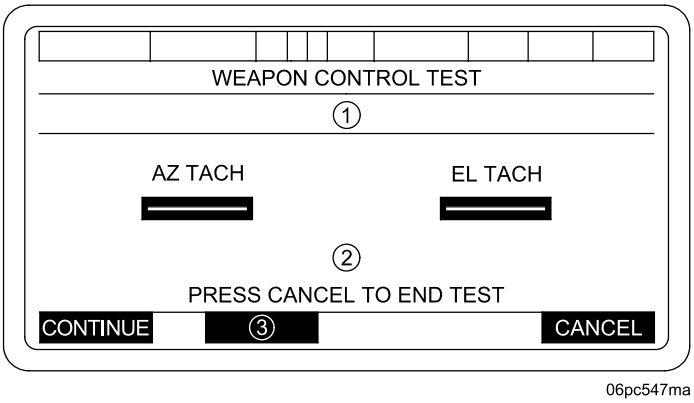

# N-9 AFCS AND PDIU FAULT DETECTION - CONTINUED

## N-9.4 Weapon Control Test - Continued

Depressing gun tube will cause numbers to appear/change (as CHIEF OF SECTION control handles are depressed) in EL TACH box. If numbers do not change/move, your TACH is not working.

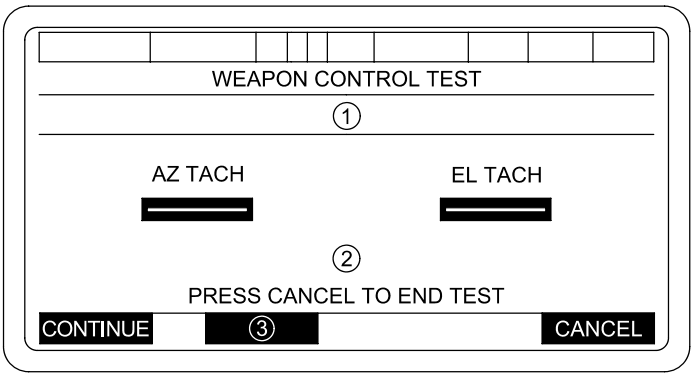


06pc547ma

Traversing gun tube to right will cause numbers to appear/change (as CHIEF OF SECTION control handles are rotated to right) in AZ TACH box. If numbers do not change/move, your TACH is not working.

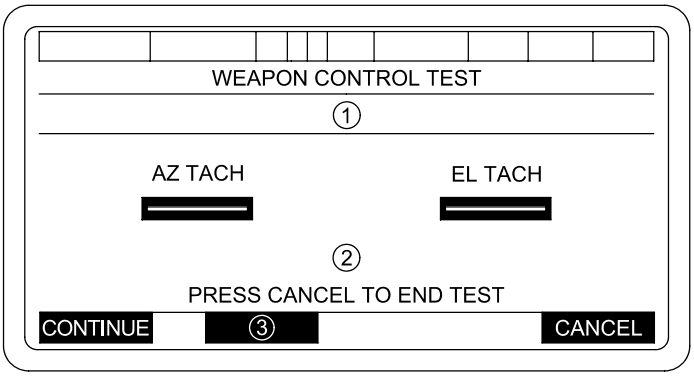


06pc547ma

Traversing gun tube to left will cause numbers to appear/change (as CHIEF OF SECTION control handles are rotated to left) in AZ TACH box. If numbers do not change/move, your TACH is not working.

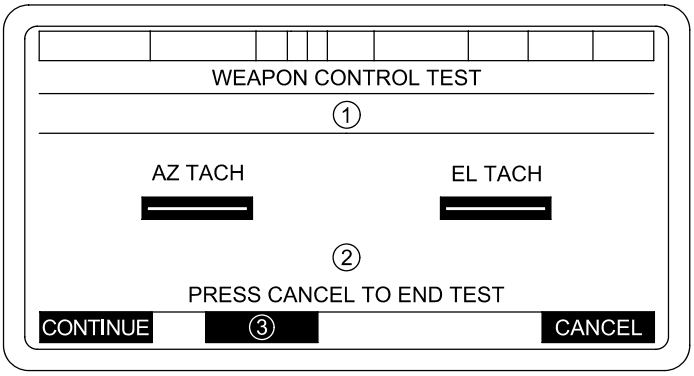


06pc547ma

# N-9 AFCS AND PDIU FAULT DETECTION - CONTINUED

## N-9.4 Weapon Control Test - Continued

The following table describes the status messages to be displayed in Fields (1) and (2) during the Weapon Control Test.

**Table N-20. Weapon Control Test Status Messages**

| TEST PHASE | 1 | 2 | 3 |
|---|---|---|---|
| 1 | "ELEVATE TUBE TEST" | "ERROR IN TUBE MOVEMENT SELECT CONTINUE, REDO, OR CANCEL" | "REDO" |
| 1 | "ELEVATE TUBE TEST" | "TEST FAILED - PRESS REDO TO RE-RUN OR CONTINUE FOR NEXT TEST PHASE" | "REDO" |
| 1 | "ELEVATE TUBE TEST" | "TEST PASSED PRESS CONTINUE FOR NEXT TEST PHASE" | BLANK |
| 2 | "DEPRESS TUBE TEST" | "ERROR IN TUBE MOVEMENT SELECT CONTINUE, REDO, OR CANCEL" | "REDO" |
| 2 | "DEPRESS TUBE TEST" | "TEST FAILED - PRESS REDO TO RE-RUN OR CONTINUE FOR NEXT TEST PHASE" | "REDO" |
| 2 | "DEPRESS TUBE TEST" | "TEST PASSED - PRESS CONTINUE FOR NEXT TEST PHASE" | BLANK |
| 3 | "TRAVERSE TUBE LEFT TEST" | "TEST PASSED PRESS CONTINUE FOR NEXT TEST PHASE" | BLANK |
| 3 | "TRAVERSE TUBE LEFT TEST" | "ERROR IN TUBE MOVEMENT SELECT CONTINUE, REDO, OR CANCEL" | "REDO" |
| 3 | "TRAVERSE TUBE LEFT TEST" | "TEST FAILED - PRESS REDO TO RE-RUN OR CONTINUE FOR NEXT TEST PHASE" | "REDO" |
| 4 | "TRAVERSE TUBE RIGHT TEST" | "ERROR IN TUBE MOVEMENT SELECT CONTINUE, REDO, OR CANCEL" | "REDO" |
| 4 | "TRAVERSE TUBE RIGHT TEST" | "TEST FAILED - PRESS REDO TO RE-RUN OR CONTINUE TO REPEAT TEST" | "REDO" |
| 4 | "TRAVERSE TUBE RIGHT TEST" | "TEST PASSED PRESS CONTINUE TO REPEAT TEST" | BLANK |

# N-9 AFCS AND PDIU FAULT DETECTION - CONTINUED

## N-9.5 Vehicle Motion Sensor Test.

This test is designed to check Vehicle Positioning System. The VMS provides signals to the AFCS that aid in the location and positioning of vehicle (coordinates).

This test SHOULD be performed under standard vehicle setup conditions (para N-9.3). This test is used whenever directed by troubleshooting procedures, or when NAV DEGRADED is displayed on the DU and you get ZUPT requests after about 4 minutes of travel.

If test results indicate that VMS is not properly functioning, notify unit maintenance personnel for corrective action.

a. Select VMS TEST from MAINTENANCE MODE SELECT menu.

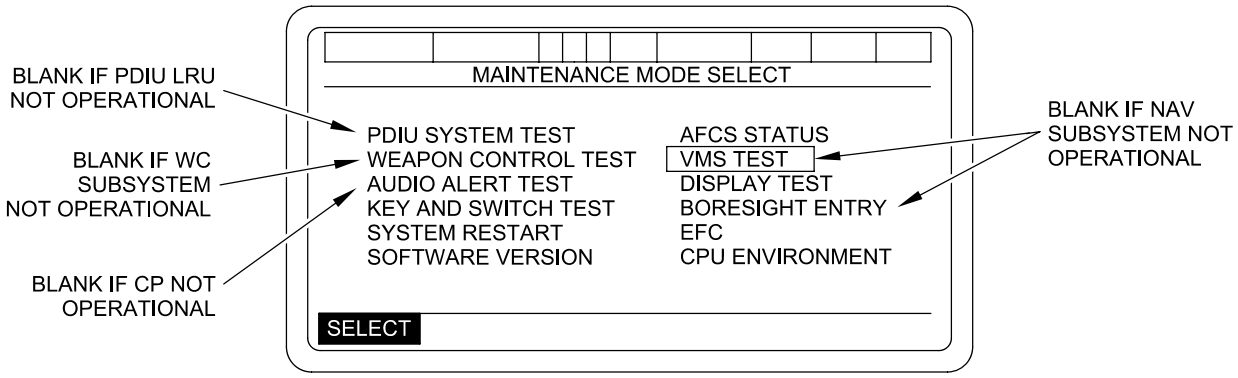


06pc134tb

# N-9 AFCS AND PDIU FAULT DETECTION - CONTINUED

## N-9.5 Vehicle Motion Sensor Test - Continued

This test is run automatically.

b. Depressing softkey under CANCEL will end test and take you back to MAINTENANCE MODE SELECT menu.

**NOTE**

VMS test does not restore use of the VMS by the DRUH. Therefore, NAV SUBSYSTEM STATUS may show “VMS BIT FAIL” even though the result of VMS test is “VMS GOOD”. When the DRUH has been stationary for 5 minutes, the AFCS will attempt to restore use of the VMS by the DRUH. If the attempt was successful, NAV SUBSYSTEM STATUS will change to “VMS BIT OK”.

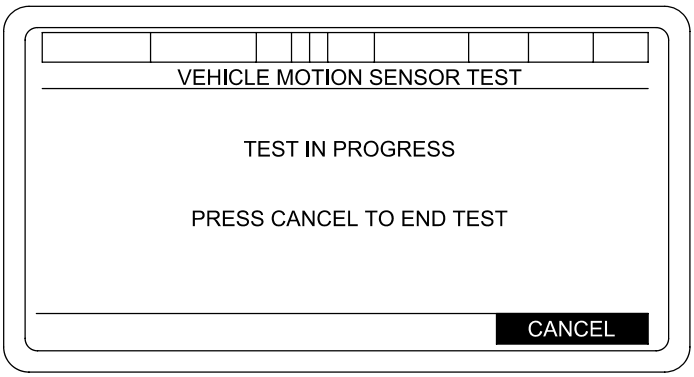


06pc548ma

If test results indicate a fault, determine if this degraded mode is acceptable. If not, notify unit maintenance.

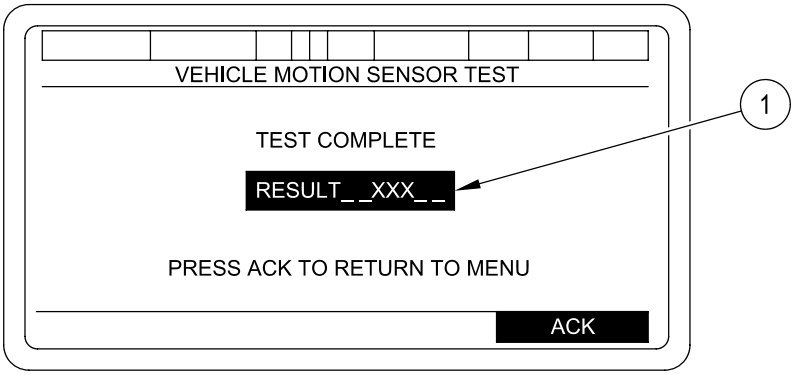


06pc549ma

(1) Test results can show any of the following:

RESULT -- VMS GOOD

RESULT -- VMS BAD

RESULT -- CAB SIDE VMS MODEM BAD

RESULT -- CHASSIS SIDE VMS MODEM BAD

c. When test is completed, depress softkey under ACK. This will take you back to MAINTENANCE MODE SELECT menu.

# N-9 AFCS AND PDIU FAULT DETECTION - CONTINUED

## N-9.6 Audio Alert Test.

This test checks the AFCS communications system fire mission alert notification. During this test, all crewmember's intercom control boxes should emit a repeating tone for 5 seconds. Checks of CVC helmets and intercoms should be performed.

This test should be performed under the standard vehicle setup conditions.

This test is used when directed by troubleshooting procedures, or if testing intercom/CVC is desirable.

a. Select AUDIO ALERT TEST from MAINTENANCE MODE SELECT menu. Press SELECT KEY. AUDIO ALERT TEST is displayed.

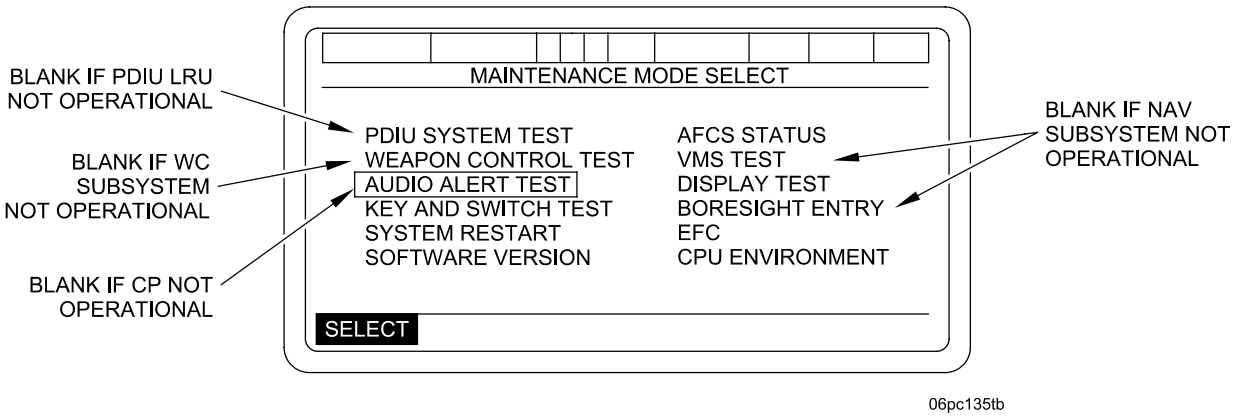


b. Depressing softkey under CANCEL will take you back to MAINTENANCE MODE SELECT menu.

c. Depressing softkey under CONTINUE will start your AUDIO ALERT TEST.

d. When your AUDIO ALERT TEST is completed, you may depress softkey under CONTINUE to repeat test.

e. When test is completed, depress softkey under CANCEL to return to MAINTENANCE MODE SELECT menu.

f. If there is fault with your intercom/AFCS, notify unit maintenance.

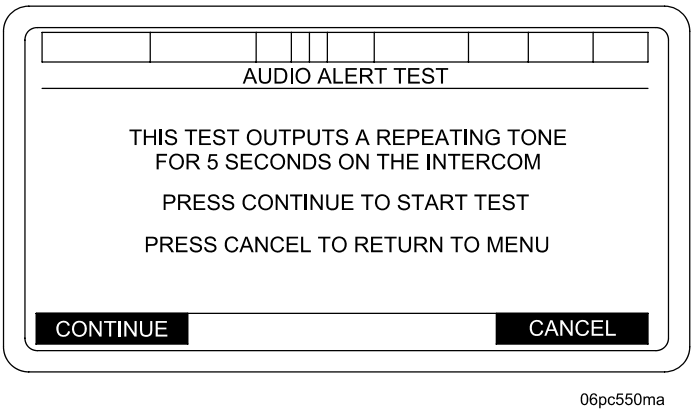

# N-9 AFCS AND PDIU FAULT DETECTION - CONTINUED

## N-9.7 Display Test.

This test checks the uniform color contrast in the screen on the display unit. Information appearing on the screen may become too light to read.

This test should be performed under standard vehicle setup condition (para N-9.3).

This test will be used when directed by troubleshooting procedures, or if testing of DCU screen is desirable.

a. Select DISPLAY TEST from MAINTENANCE MODE SELECT menu. Press SELECT key.

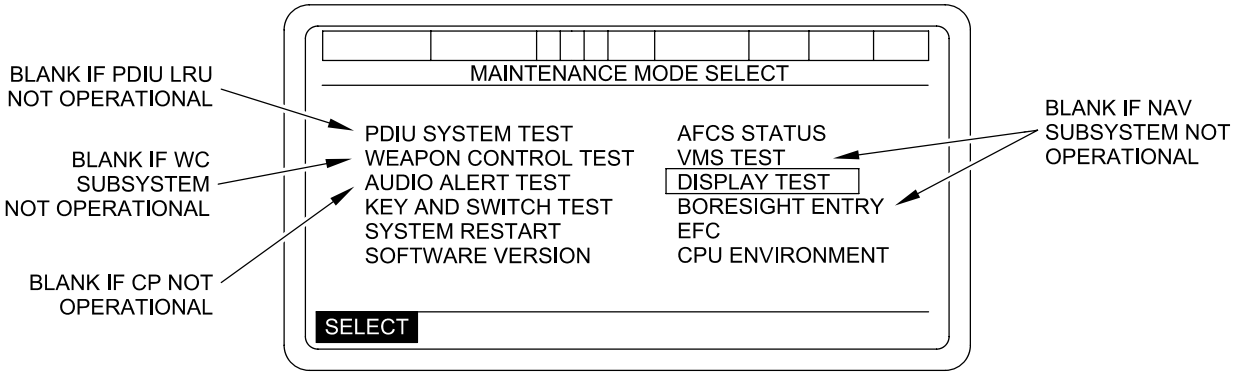


06pc136td

b. Your display (EL PANEL) will become highlighted for 2 seconds. After 2 seconds, your EL PANEL will return to normal. You may reselect DISPLAY TEST if required.

c. If there are some spots on your EL PANEL that did not light up, determine if this degraded mode is acceptable. If this is not acceptable, notify unit maintenance.

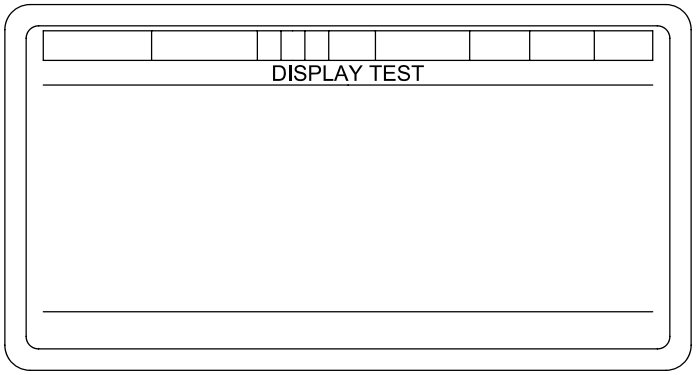


06pc136tc

# N-9 AFCS AND PDIU FAULT DETECTION - CONTINUED

## N-9.8 Key and Switch Test.

### NOTE

AFCS must be powered up at least 5 minutes prior to performing this test.

This test checks the response of each key and toggle switch on the display panel. The key marked T is for the embedded trainer switch and the key marked S is the GUN SERVO switch. Ensure that NOTES are observed when conducting this test.

This test should be performed under the standard vehicle setup condition (para N-9.3).

This test will be used, when directed by troubleshooting procedures, or if malfunctions of keypad and switches are apparent.

Select KEY AND SWITCH TEST from MAINTENANCE MODE SELECT menu. Press SELECT key.

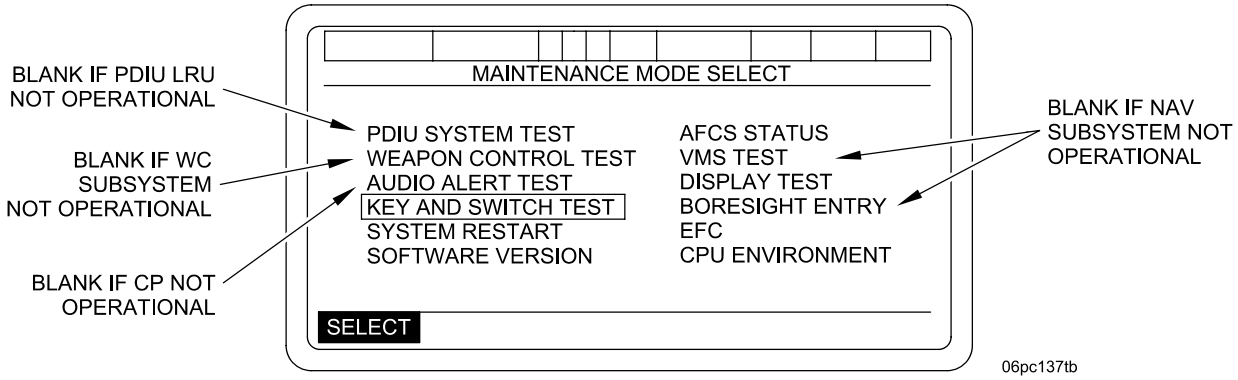


### NOTE

- Test ends when F1 (softkey) is depressed. Make sure you depress F1 softkey last while performing this test.
- Do not place DU POWER switch to OFF during this test.

a. Depress each key in turn (including arrow keys, softkeys, LOAD, LAY, and STOW keys) and place both switches shown to ON/OFF for testing. As each key is depressed, it will be highlighted.

b. As each switch/toggle is moved, it will move up or down on your EL PANEL.

c. If fault is indicated with your keypad, switches, softkeys, arrow keys, LOAD, LAY, or STOW keys, notify unit maintenance.

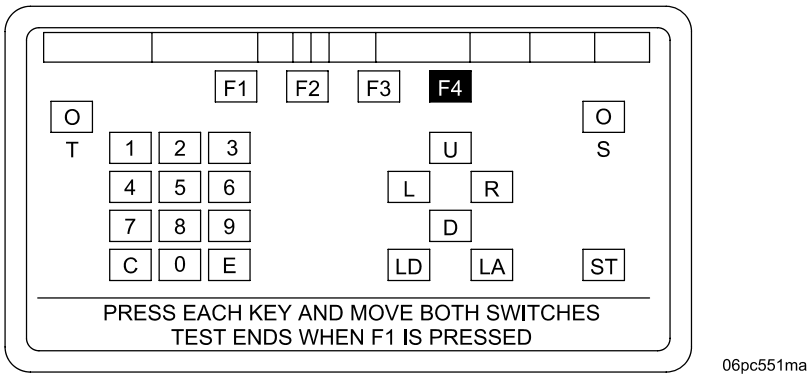

# N-9 AFCS AND PDIU FAULT DETECTION - CONTINUED

## N-9.9 Boresight Angle Entry Test.

**NOTE**

If you accidently enter this mode, you must exit immediately by pressing the CANCEL key.

This capability is for use by unit maintenance personnel only. Operators must not use this selection.

**WARNING**

Selection of boresight angle entry will be used by unit maintenance personnel to input correction to NAV SUBSYSTEM boresight. Entry of improper data into boresight angle entry menu can cause gun to be laid incorrectly. This could result in injury or death to personnel down range.

## N-9.10 Equivalent Full Charge (EFC).

EFC data is maintained by the AFCS. It consists of a cumulative set which contains the total number of rounds fired by the gun using legal charge and the accumulated EFC based on the total number of rounds fired. The AFCS saves the data in the non-volatile memory during normal AFCS power down sequencing.

The calculation of EFC is done automatically for POC/FDC directed fire missions when the operator presses the softkey under the VERIFIED prompt on the VERIFY EXPENDED AMMO menu. However, should the operator not be able to VERIFY that the specified ammunition has been fired, or fire missions have been fired with data supply by voice radios, or direct fire missions have occurred, then the operator will be required to update the AFCS Ammunition Inventory and the EFC.

To update the EFC, access the SETUP AND INFORMATION menu, place the cursor on MAINTENANCE and press softkey under SELECT prompt. The MAINTENANCE MODE SELECT menu will appear. Place cursor on EFC and press softkey under SELECT prompt. The EQUIVALENT FULL CHARGE Menu will be displayed.

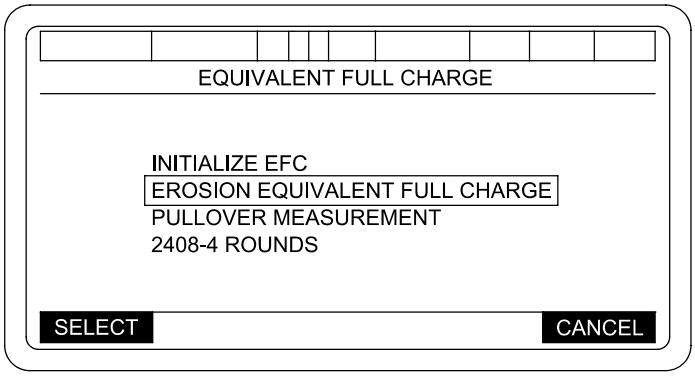


06pc281t

Each of the four functions will now be described separately.

# N-9 AFCS AND PDIU FAULT DETECTION - CONTINUED

## N-9.10 Equivalent Full Charge (EFC) - Continued

N-9.10.1 Initialize EFC.

This function is used to initialize EFC data in the event a new cannon tube is placed on the vehicle.

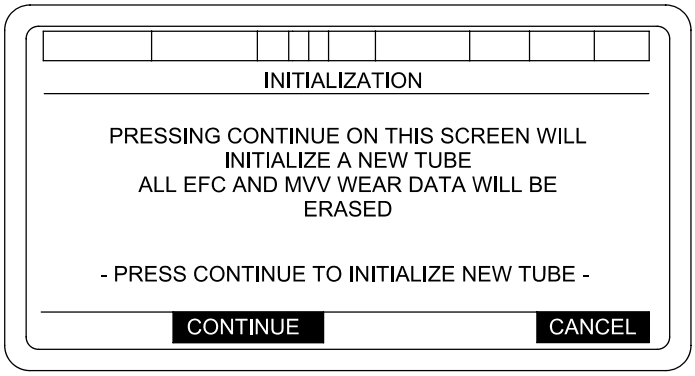


06pc281ta

If you press CONTINUE, the AFCS shall display the operator prompt “ARE YOU SURE?” “YES” “NO”.

If YES is pressed, the following actions occur automatically and the display will return to the EQUIVALENT FULL CHARGE menu:

Pullover Gauge Measurement is reset to 6.100 (This also causes EFC Erosion to reset to Zero)
MVV Wear Database is reset to Zero
2408-4 Rounds Information is reset to Zero

If NO is pressed, the display will return to the EQUIVALENT FULL CHARGE menu.

N-9.10.2 Erosion Equivalent Full Charge.

**NOTE**

The maximum value of EFC displayed shall not exceed 2700.

This function is used to view the Current EFC Erosion Count of the weapon.

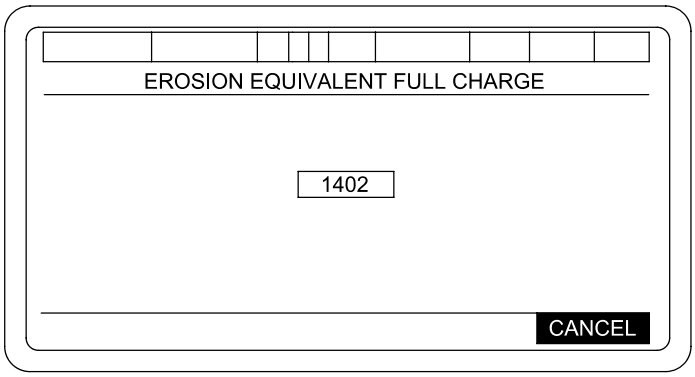


06pc282t

When the CANCEL softkey is pressed, the display shall return to the EQUIVALENT FULL CHARGE menu.

# N-9 AFCS AND PDIU FAULT DETECTION - CONTINUED

## N-9.10 Equivalent Full Charge (EFC) - Continued

N-9.10.3 Pullover Measurement.

This function is used to view the Current Pullover Gauge Measurement or input a new Pullover Gauge Measurement.

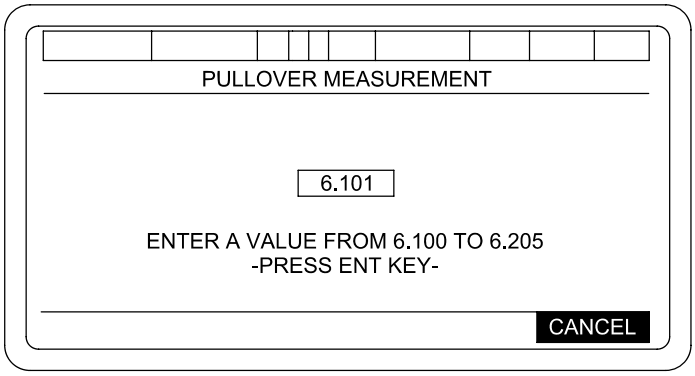


06pc282ta

The operator shall only be allowed to enter a Pullover Measurement of 6.100 to 6.205. If the operator enters a value less than 6.100 or greater than 6.205, the AFCS shall display the operator warning “VALUE TOO BIG” “ACK” or “VALUE TOO SMALL” “ACK”. When the ACK softkey is pressed, the display shall return to the previously stored value.

When the ENTER key is pressed, the AFCS shall display the operator prompt “ARE YOU SURE?” “YES” “NO”.

If YES is pressed, then the AFCS shall convert the Pullover Gauge Measurement into the equivalent EFC Erosion count and update the EFC Erosion count in the MVV Wear Database. The display will then return to the EQUIVALENT FULL CHARGE menu.

If NO is pressed, the screen will return to the previously stored values for re-entry of data.

N-9.10.4 2408-4 Rounds.

This screen allows four separate and distinct functions:

The first allows update of Total Rounds (which shall not affect EFC Erosion) to match the Manual 2408-4. The second permits entry of rounds fired during a period in which the AFCS was inoperable. The third allows adjustment of rounds entered during Verification or “Other” missions not actually fired. The fourth function allows initialization of a new ACU. When coupled with Pullover Gauge, 2408-4 TOT RNDS PRIOR TO PULLOVER GAUGE, AND “+/- RNDS”, the last known EFC Erosion can be duplicated.

# N-9 AFCS AND PDIU FAULT DETECTION - CONTINUED

## N-9.10 Equivalent Full Charge (EFC) - Continued

N-9.10.4 2408-4 Rounds - Continued

### NOTE

To maintain accuracy and consistency, the AFCS database must be restored exactly as it was at the time the AFCS became inoperable.

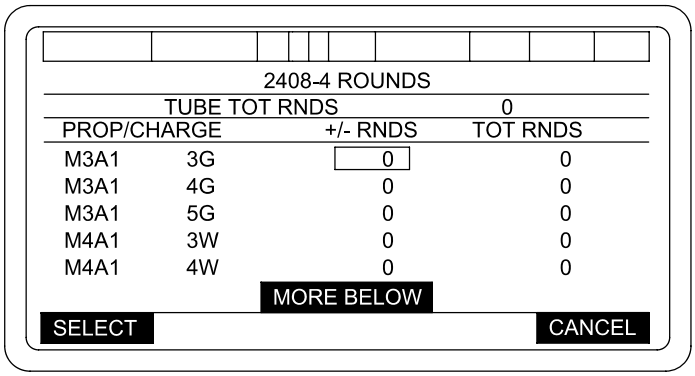


06pc283t

### NOTE

Scrolling shall be enabled, with MORE BELOW and MORE ABOVE appearing as appropriate.

When +/- RNDS is highlighted and the SELECT softkey is pressed, the following will be displayed:

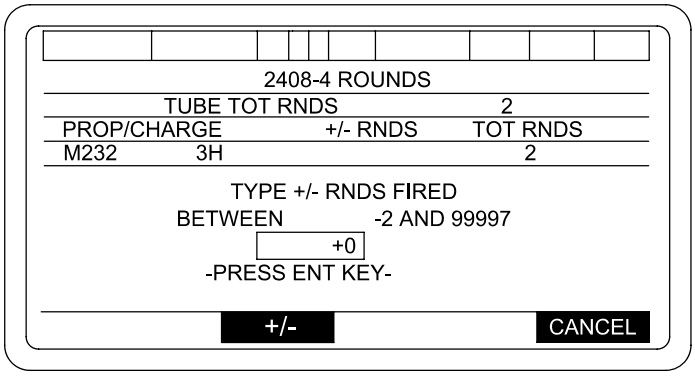


06pc283ta

# N-9 AFCS AND PDIU FAULT DETECTION - CONTINUED

## N-9.10 Equivalent Full Charge (EFC) - Continued

N-9.10.4 2408-4 Rounds - Continued

When TOT RNDS is highlighted and the SELECT softkey is pressed, the following will be displayed:

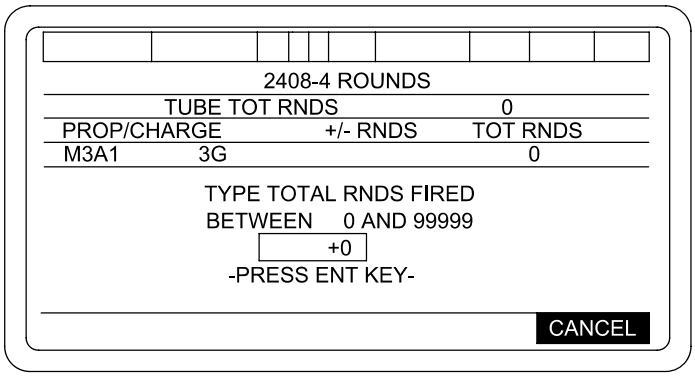


06pc284t

Input new value and press ENTER to accept value. when ENTER has been pressed, the display will return to the 2408-4 ROUNDS screen.

# N-9 AFCS AND PDIU FAULT DETECTION - CONTINUED

## N-9.11 AFCS and PDIU Abbreviations.

| ABBREVIATION | NAME |
|---|---|
| ACU | AFCS COMPUTER UNIT |
| AFCS | AUTOMATIC FIRE CONTROL SYSTEM |
| AOF | AZIMUTH OF FIRE |
| ASIP | ADVANCED SYSTEM IMPROVEMENT PROGRAM |
| AZ | AZIMUTH |
| AUXA | EXTERNAL BATTERY-A |
| AUXB | EXTERNAL BATTERY-B |
| AZ/EL TACHS | AZIMUTH AND ELEVATION TACHOMETERS |
| AZTACH | AZIMUTH TACHOMETER |
| BATT | BATTERY |
| BB2 | BRUSH BLOCK #2 |
| BB6 | BRUSH BLOCK #6 |
| BB7 | BRUSH BLOCK #7 |
| BCS | BATTERY COMPUTER SYSTEM |
| BC | BALLISTIC COMPUTATION |
| BIT | BUILT IN TEST |
| BPSL | BYPASS SOLENOID |
| BPV | BYPASS VALVE |
| CBLS | CABLES |
| CDP | CONDITION DIPOLE |
| CHKFIRE | CHECK FIRE |
| CFN | COOLING FAN |
| CLCS | CLUTCH SOLENOID |
| CLV | CLUTCH VALVE |
| COMMO | COMMUNICATION |
| COS | CHIEF OF SECTION |
| COSCH | CHIEF OF SECTION CONTROL HANDLE |
| COSCH VLF | CHIEF OF SECTION CONTROL HANDLE VELOCITY FUSE |
| CP | COMMUNICATIONS PROCESSING |
| CPCI | COMPUTER PROGRAM CONFIGURATION ITEM |
| CRSH | CURRENT SHUNT |
| CTRL | CONTROL |
| CTSW | COOLING TEMPERATURE SWITCH |
| DAGR | DEFENSE ADVANCED GPS RECEIVER |
| DLY | DELAY |
| DTG | DATE TIME GROUP |
| DU | DISPLAY UNIT |
| DRU | DYNAMIC REFERENCE UNIT |
| DRUH | DYNAMIC REFERENCE UNIT HYBRID |
| EL | ELEVATION |

# N-9 AFCS AND PDIU FAULT DETECTION - CONTINUED

## N-9.11 AFCS and PDIU Abbreviations - Continued

| ABBREVIATION | NAME |
|---|---|
| ELHP | ELEVATION HANDPUMP |
| ELSL | ELEVATION SELECT SOLENOID |
| ELSV | ELEVATION SERVO VALVE |
| ELTACH | ELEVATION TACHOMETER |
| ELTRUN | ELEVATION TRUNNION |
| ELV | ELEVATION SELECT VALVE |
| EOM | END OF MISSION |
| EQ | EQUILIBRATION |
| EQA | EQUILIBRATION ASSEMBLY |
| EQACC | EQUILIBRATION ACCUMULATOR |
| EQHP | EQUILIBRATOR HANDPUMP |
| EQMANIFOLD | EQUILIBRATION MANIFOLD |
| EQ CHARGE VALVE | EQUILIBRATOR CHARGE VALVE |
| FDC | FIRE DIRECTION CENTER |
| FIL | FILTER |
| FILA | FILTER ASSEMBLY |
| FIREMSN | FIRE MISSION |
| FLOM | FLOWMETER |
| FLU | FLUID |
| FLUSN | FLUID LEVEL SENSOR |
| FPF | FINAL PROTECTIVE FIRE |
| GCH | GUNNER'S CONTROL HANDLE |
| GNR | GUNNER |
| GPS | GLOBAL POSITIONING SYSTEM |
| HCB | HYDRAULIC CONTROL BOX |
| HPUMP | HANDPUMP |
| HYD | HYDRAULIC |
| HYM | HYDRAULIC PUMP ELECTRIC MOTOR |
| HYP | HYDRAULIC PUMP |
| HYPR | HYDRAULIC POWER RELAY |
| IAW | IN ACCORDANCE |
| IFS | INDUCTIVE FUZE SETTER |
| INP | INPUT |
| LRU | LINE REPLACEABLE UNIT |
| MO | MOVE ORDER |
| MSL | MODE SELECT SOLENOID |
| MSV | MODE SELECT VALVE |
| MVS | MUZZLE VELOCITY SENSOR |
| MVV | MUZZLE VELOCITY VARIANCES |
| NAV | NAVIGATION |
| NA | NAV ASSIST |

# N-9 AFCS AND PDIU FAULT DETECTION - CONTINUED

## N-9.11 AFCS and PDIU Abbreviations - Continued

| ABBREVIATION | NAME |
|---|---|
| NRZ | NON-RETURN TO ZERO |
| OLSN | OVERLOAD SENSOR |
| PCU | POWER CONDITIONER UNIT |
| PDCU | PDFCS COMPUTER UNIT |
| PDI | PROGNOSTIC DIAGNOSTIC INTERFACE |
| PDIU | PROGNOSTIC DIAGNOSTIC INTERFACE UNIT |
| PIA | PLATFORM INTERFACE ADAPTER |
| PIK | PLATFORM INTEGRATION KIT |
| PLGR | PRECISION LIGHTWEIGHT GPS RECEIVER |
| PRESS | PRESSURE |
| PWR | POWER |
| PXDCR | PRESSURE TRANSDUCER |
| REFIL | RETURN FILTER |
| RR | RADIO RACK |
| SFIL | SUPPLY FILTER |
| SH | SHUNT |
| SIP | SYSTEM IMPROVEMENT PROGRAM |
| SL | SOLENOID |
| SN | SENSOR |
| SR | SLIP RING |
| STE-X | SIMPLIFIED TEST EQUIPMENT-EXPANDED |
| SV | SERVO |
| SW | SWITCH |
| SYS | SYSTEM |
| TEMP | TEMPERATURE |
| TF XXI | TASK FORCE TWENTY-ONE |
| TOT | TIME ON TARGET |
| TRAV | TRAVERSE |
| TRAV GEAR | TRAVERSING GEAR |
| TRDM | TRAVERSE DRIVE MECHANISM |
| TRLSL | TRAVERSE LIMIT SOLENOID |
| TRLSW | TRAVERSE LIMIT SWITCH |
| TRLV | TRAVERSE LIMIT VALVE |
| TRSL | TRAVERSE SELECT SOLENOID |
| TRSV | TRAVERSE SERVO VALVE |
| TRV | TRAVERSE SELECT VALVE |
| TSN | TEMPERATURE SENSOR |
| TTCBL | TUBE TEMPERATURE SENSOR GFE CABLE |
| TTTSN | TUBE TEMPERATURE SENSOR |

# N-9 AFCS AND PDIU FAULT DETECTION - CONTINUED

## N-9.11 AFCS and PDIU Abbreviations - Continued

| ABBREVIATION | NAME |
|---|---|
| TXDCR | TEMPERATURE TRANSDUCER |
| USRDEF | USER DEFINED |
| VMS | VEHICLE MOTION SENSOR |
| VMSC | VEHICLE MOTION SENSOR MODEM-CAB |
| VMSH | VEHICLE MOTION SENSOR MODEM-HULL |
| VLF | VELOCITY FUSES |
| VT | VARIABLE TIME |
| WC | WEAPONS CONTROLLER |
| WPN | WEAPON |
| WTSL | WARMUP TEMPERATURE SOLENOID |
| WTSW | WARMUP TEMPERATURE SWITCH |
| WTV | WARMUP TEMPERATURE VALVE |

# N-9 AFCS AND PDIU FAULT DETECTION - CONTINUED

## N-9.12 Software Version/Configuration Display.

To view detailed software configuration information for each Computer Program Configuration Item (CPCI) move cursor to SOFTWARE VERSION on the MAINTENANCE MODE SELECT menu.

### NOTE

- Information displayed from the DRUH can be interpreted as version configuration data.
- When a LRU/CPCI other than the DCU is reported with an indirect configuration, then the system will run in a degraded mode and will declare the LRU/CPCI as unavailable.
- Initially, the ACQUIRED information of the display will give the boot loader, system software version and build data for each computer program configuration item that is acceptable to the system software configuration.
- If the CPCI is not acceptable, there will be an asterisk (*) to the left of the CPCI. If the asterisk is present, this will cause the system to operate in the DEGRADED mode unless the asterisk appears next to DCU, then the system will only operate in the maintenance mode.
- To check which version of software is acceptable, press softkey under EXPECTED.
- If a CPCI is blank, the version of software loaded is acceptable with any system configuration.
- If uploading of software is required, notify unit maintenance.

# N-9 AFCS AND PDIU FAULT DETECTION - CONTINUED

## N-9.12 Software Version/Configuration Display - Continued

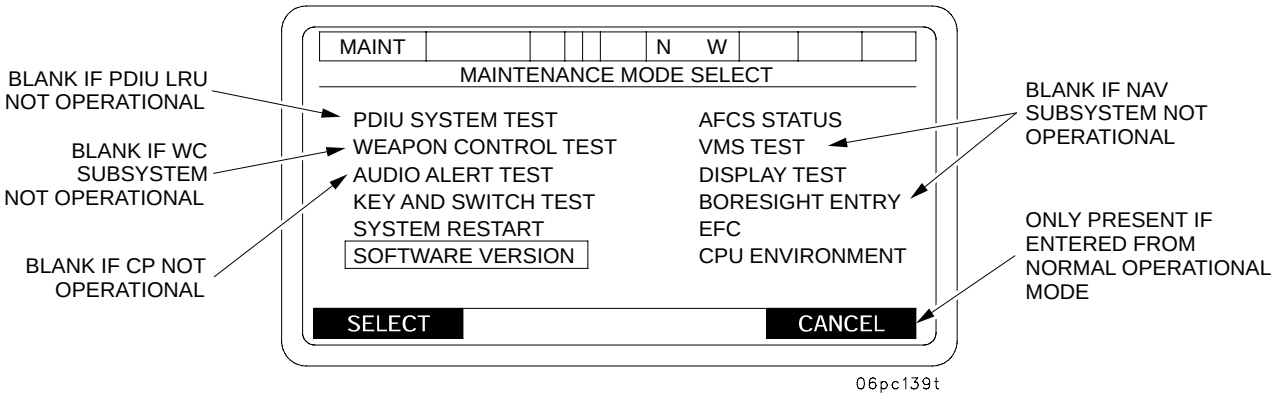


Press softkey label SELECT and the SOFTWARE VERSION/CONFIGURATION display as shown below will appear.

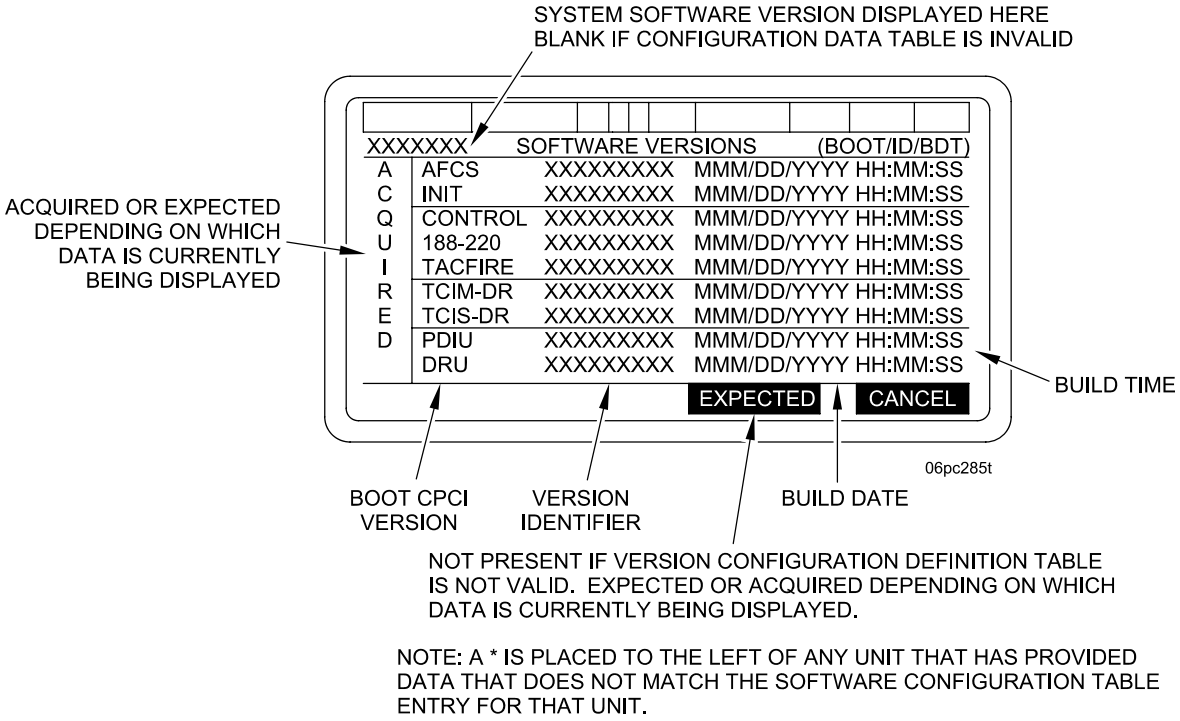


NOTE: A * IS PLACED TO THE LEFT OF ANY UNIT THAT HAS PROVIDED DATA THAT DOES NOT MATCH THE SOFTWARE CONFIGURATION TABLE ENTRY FOR THAT UNIT.

# N-9 AFCS AND PDIU FAULT DETECTION - CONTINUED

## N-9.13 CPU Environment Display.

This display allows the operator to view system related parameters as follows:

Inputs:

1. Operating System Version (O/S)
2. BIOS Information (Vendor & Version)
3. Elapsed Time Meter (in hours)

The tactical software receives the data listed above from the ACU and presents this information to the operator on the DU. This information is used by maintenance personnel.

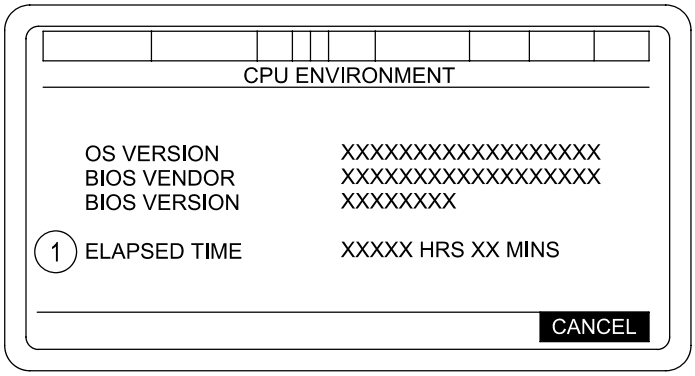


06pc428ma

1 The "ELAPSED TIME" line is not present on a PDCU system because the PDCU uses a mechanical timer to perform this function.

## N-10 SYMPTOM INDEX.

### NOTE

- Before you use this troubleshooting table, be sure you have performed all applicable operating checks in Chapter 2.
- For corrective actions of malfunctions not listed in this table, notify unit maintenance.
- Wherever the word lubricate appears, see Appendix I.

The following symptom index is to assist you in locating the correct troubleshooting procedure quickly.


| AFCS | Troubleshooting Procedure Page |
|---|---|
| AFCS – software lockup | N-246 |
| Cab does not traverse freely under AFCS control | N-246 |
| Cab creeps under AFCS control | N-247 |
| Gun tube does not move to LOAD position when LOAD is selected under AFCS control | N-248 |
| Gun tube does not move to STOW position when STOW is selected under AFCS control | N-249 |
| Gun tube does not move to LAY position when LAY is selected under AFCS control | N-250 |
| DU does not power up | N-251 |
| Training mode cannot be selected | N-251 |
| AFCS is not able to receive a mission | N-251 |
| No audible alert for COS or crew (DU power is On) | N-252 |
| EL Panel messages are garbled/hard to read | N-252 |
| DU softkeys/arrow keys/keypad switches, LOAD, LAY, or STOW keys do not respond properly | N-252 |
| NAV subsystem fault (degraded mode) is indicated | N-252 |
| DU subsystem fault (degraded mode) is indicated | N-253 |
| WPN subsystem fault (degraded mode) is indicated | N-253 |
| PDIU subsystem fault (degraded mode) is indicated | N-253 |
| PCU subsystem fault (degraded mode) is indicated | N-253 |
| MVS subsystem fault (degraded mode) is indicated | N-254 |
| AFCS position drifts/DRUH “OP FAIL” is indicated | N-255 |

Table N-21. TROUBLESHOOTING

MALFUNCTION

TEST OR INSPECTION

CORRECTIVE ACTION

## AFCS

**WARNING**

Before troubleshooting AFCS gun positioning faults, make sure immediate area around and in the howitzer is clear of nonessential personnel and that no other equipment is within the 360 degree radius of the cab. Before moving gun servo switch to the ON position, announce loudly to everyone in immediate area, “AFCS POWER ON”. Serious injury or death, and/or equipment damage could result.

1. AFCS - SOFTWARE LOCKUP

   Step 1. Place DU POWER switch OFF and wait at least 5 seconds.

   Step 2. Place DU POWER switch ON and restart system. If lockup persists, notify unit maintenance.

2. CAB DOES NOT TRAVERSE FREELY UNDER AFCS CONTROL.

**NOTE**

Verify following: main drive gears and gun tube are unobstructed and main hydraulic pressure is at 1925 psi ± 50 psi.

Step 1. Verify that GUN SERVO light illuminates when LAY button is pressed.

a. If not ON, place gun switch ON.

b. If switch is ON, go to step 2.

Step 2. Check to see if you are in NORMAL OPERATIONS mode.

a. Verify that TRAVERSE mode switch is in the POWER position. Check EL Panel for mode display. Status line will indicate mode.

   If not, enter proper mode.

b. If in NORMAL OPERATIONS mode, check EL Panel fields.

   (1) Verify that LOAD, LAY, or STOW fields are displayed on EL Panel of DU when GUN SERVO SWITCH is on.

   (2) LOAD, LAY, or STOW fields (graphics) are highlighted when displayed.

   Gun is already in proper position.

   (3) LOAD, LAY, or STOW fields (graphics) are displayed in normal form.

   Reselect proper functional key. If cab does not traverse freely, notify unit maintenance. Complete mission in DEGRADED mode.

   (4) LOAD, LAY, or STOW fields are not displayed

   . If fields are not displayed, go to step 3.

Table N-21. TROUBLESHOOTING - Continued

| MALFUNCTION / TEST OR INSPECTION | CORRECTIVE ACTION |
|---|---|

## AFCS - Continued

Step 3. Check DU for fault indication.

a. GUN SERVO indicator not lit during LOAD/LAY/STOW operation.

Run PDIU system test (para N-9.3) and notify unit maintenance. Complete mission in DEGRADED mode.

b. FAULT indicator lit.

Check status line for faulty hardware, run PDIU system test (para N-9.3) and notify unit maintenance. Complete mission in DEGRADED mode.

3. CAB CREEPS UNDER AFCS CONTROL.

Step 1. Verify that GUN SERVO ON/OFF switch is ON.

a. If not ON, place switch ON.

b. If switch is ON, go to step 2.

Step 2. Check to see if you are in NORMAL OPERATIONS mode.

a. Check EL Panel for mode display.

If not in proper mode, enter proper mode.

b. If in NORMAL OPERATIONS mode, check EL Panel fields.

(1) Verify that LOAD, LAY, or STOW fields are displayed on EL Panel of DU.

(2) LOAD, LAY, or STOW fields are highlighted, when displayed.

Gun is already in proper position, cab should not creep. If cab still creeps, notify unit maintenance. Complete mission in DEGRADED mode.

(3) LOAD, LAY, or STOW fields are displayed properly.

Reselect proper functional key. If cab still creeps, notify unit maintenance.

(4) LOAD, LAY, or STOW fields are not displayed.

If fields are not displayed, go to step 3.

Step 3. Check DU for fault indication.

a. GUN SERVO indicator not lit during LOAD/LAY/STOW operation.

Run PDIU system test (para N-9.3) and notify unit maintenance. Complete mission in DEGRADED mode.

b. FAULT indicator lit.

Check status line on EL Panel for faulty hardware, run PDIU system test (para N-9.3), and notify unit maintenance. Complete mission in DEGRADED mode.

Table N-21. TROUBLESHOOTING - Continued

| MALFUNCTION | TEST OR INSPECTION | CORRECTIVE ACTION |
|---|---|---|

## AFCS - Continued

4. GUN TUBE DOES NOT MOVE TO LOAD POSITION WHEN LOAD IS SELECTED UNDER AFCS CONTROL.

Step 1. Verify that GUN SERVO ON/OFF switch is ON.

a. If not ON, place switch ON.

b. If switch is ON, go to step 2.

Step 2. Check to see if you are in NORMAL OPERATIONS mode.

a. Verify that TRAVERSE mode switch is in the POWER position. Check EL Panel for mode display.

If not in proper mode, enter proper mode.

b. If in NORMAL OPERATIONS mode, check EL Panel fields.

(1) Verify that LOAD, LAY or STOW fields are displayed on EL Panel of DU.

(2) LOAD, LAY, or STOW fields are highlighted, when displayed.

Gun is already in proper position.

(3) LOAD, LAY, or STOW fields are displayed properly.

Reselect proper functional key. If gun tube still does not move to LOAD position, notify unit maintenance. Complete mission in DEGRADED mode.

(4) LOAD, LAY, or STOW fields are not displayed.

If fields are not displayed, go to step 3.

Step 3. Check DU for fault indication.

a. GUN SERVO indicator not lit during LOAD/LAY/STOW operation.

Run PDIU system test (para N-9.3) and notify unit maintenance. Complete mission in DEGRADED mode.

b. FAULT indicator lit.

Check status line on EL Panel for faulty hardware, run PDIU system test (para N-9.3), and notify unit maintenance. Complete mission in DEGRADED mode.

Table N-21. TROUBLESHOOTING - Continued

| MALFUNCTION | TEST OR INSPECTION | CORRECTIVE ACTION |
|---|---|---|

## AFCS - Continued

5. GUN TUBE DOES NOT MOVE TO STOW POSITION WHEN STOW IS SELECTED UNDER AFCS CONTROL.

Step 1. Verify that GUN SERVO ON/OFF switch is ON.

a. If not ON, place switch ON.

b. If switch is ON, go to step 2.

Step 2. Check to see if you are in NORMAL OPERATIONS mode.

a. Verify that TRAVERSE mode switch is in the POWER position. Check EL Panel for mode display.

If not in proper mode, enter proper mode.

b. If in NORMAL OPERATIONS mode, check EL Panel fields.

(1) Verify that LOAD, LAY, or STOW fields are displayed on EL Panel of DU.

(2) LOAD, LAY, or STOW fields are highlighted when displayed.

Gun tube is already in proper position.

(3) LOAD, LAY, or STOW fields are displayed properly.

Reselect proper functional key. If gun tube does not traverse/elevate freely, notify unit maintenance. Complete mission in DEGRADED mode.

(4) LOAD, LAY, or STOW fields are not displayed.

If fields are not displayed, go to step 3.

Step 3. Check DU for fault indication.

a. GUN TUBE SERVO indicator not lit during LOAD/LAY/STOW operation.

Run PDIU system test (para N-9.3) and notify unit maintenance. Complete mission in DEGRADED mode.

b. FAULT indicator lit.

Check status line on EL Panel for faulty hardware, run PDIU system test (para N-9.3), and notify unit maintenance. Complete mission in DEGRADED mode.

Table N-21. TROUBLESHOOTING - Continued

| MALFUNCTION | TEST OR INSPECTION | CORRECTIVE ACTION |
|---|---|---|

## AFCS - Continued

6. GUN TUBE DOES NOT MOVE TO LAY POSITION WHEN LAY IS SELECTED UNDER AFCS CONTROL.

Step 1. Verify that GUN SERVO ON/OFF switch is ON.

a. If not ON, place switch ON.

b. If switch is ON, verify TRAVERSE LOCK is in UNLOCKED position. Go to step 2.

Step 2. Check to see if you are in NORMAL OPERATIONS mode.

a. Verify that TRAVERSE mode switch is in the POWER position. Check EL Panel for mode display.

If not in proper mode, enter proper mode.

b. If in NORMAL OPERATIONS mode, check EL Panel fields.

(1) Verify that LOAD, LAY, or STOW fields are displayed on EL Panel of DU.

(2) LOAD, LAY, or STOW fields are highlighted, when displayed.

Gun tube is already in proper position.

(3) LOAD, LAY, or STOW fields are displayed properly.

Reselect proper functional key. If gun tube still does not move to LAY position, notify unit maintenance. Complete mission in DEGRADED mode.

(4) LOAD, LAY, or STOW fields are not displayed.

If fields are not displayed, go to step 3.

Step 3. Check DU for fault indication.

a. GUN TUBE SERVO indicator not lit during LOAD/LAY/STOW operation.

Run PDIU system test (para N-9.3) and notify unit maintenance. Complete mission in DEGRADED mode.

b. FAULT indicator lit.

Check status line on EL Panel for faulty hardware and notify unit maintenance. Complete mission in DEGRADED mode.

Table N-21. TROUBLESHOOTING - Continued

| MALFUNCTION | TEST OR INSPECTION | CORRECTIVE ACTION |
|---|---|---|

## AFCS - Continued

7. DU DOES NOT POWER UP.

Step 1. Verify that MASTER and HYDRAULIC POWER switches are ON.

a. If not ON, place switch(es) ON.

b. If switch(es) are ON, go to step 2.

Step 2. Verify that PCU circuit breakers are ON.

a. If not ON, place appropriate circuit breaker(s) ON.

b. If all circuit breakers are ON, notify unit maintenance.

8. TRAINING MODE CANNOT BE SELECTED.

Step 1. Verify that you are in the proper mode for TRAINING selection.

a. If not, enter TRAINING mode.

b. If in TRAINING mode, place the TRAINING ON/OFF switch in ON position.

Step 2. TRAINING mode still cannot be entered.

Notify unit maintenance.

9. AFCS IS NOT ABLE TO RECEIVE A MISSION.

Step 1. Verify that during POWER UP STATUS, AFCS is okay.

a. AFCS subsystems do not check out as OK. If 1553 bus is not OK, notify unit maintenance. If the 1553 bus is degraded, go to step 2.

b. AFCS subsystems check out OK. Go to step 2.

Step 2. Verify that you are in proper mode (NORMAL OPERATIONS).

a. If not in proper mode, enter NORMAL OPERATIONS mode and go through NETWORK display until you get to SETUP AND INFORMATION display. Now go to step 3.

b. If already in proper mode, go to step 3.

Step 3. Verify that data entry has been provided and is correct for all items marked with an * on SETUP AND INFORMATION display.

a. If data has not been entered, enter data now to initialize system. Now system is able to receive a mission.

b. If data has been entered for the * items and you still are unable to receive a mission, notify unit maintenance.

Table N-21. TROUBLESHOOTING - Continued

| MALFUNCTION | TEST OR INSPECTION | CORRECTIVE ACTION |
|---|---|---|

## AFCS - Continued

10. NO AUDIBLE ALERT FOR COS OR CREW (DU POWER IS ON).

    Step 1. Verify that wire/cable connections are tight.

    If wire/cable connections are tight, go to step 2.

    Step 2. Go to para N-9.6 and perform Audio Alert Test.

    a. If intercom is not adjusted properly, adjust it now.

    b. Rerun Audio Alert Test and go to step 3.

    Step 3. If there is still no audible signal, notify unit maintenance that intercom/AFCS is faulty.

11. EL PANEL MESSAGES ARE GARBLED/HARD TO READ.

    Step 1. Verify that wire/cable connections are tight.

    If wire/cable connections are tight, go to step 2.

    Step 2. Go to para N-9.7 and perform Display Test.

    a. If test indicates that some of the pixels on EL Panel are burned out, notify unit maintenance that DU (EL Panel) is faulty.

    b. If test does not indicate a problem with pixels, have unit maintenance check AFCS.

12. DU SOFTKEYS/ARROW KEYS/KEYPAD SWITCHES, LOAD, LAY, OR STOW KEYS DO NOT RESPOND PROPERLY.

    Step 1. Verify that cable/harness connections are tight.

    If wire/cable connections are tight, go to step 2.

    Step 2. Go to para N-9.8 and perform Key and Switch Test.

    a. If test indicates a fault, notify unit maintenance that DU is faulty.

    b. If no fault is indicated, notify unit maintenance to check AFCS.

13. NAV SUBSYSTEM FAULT (DEGRADED MODE) IS INDICATED.

    Step 1. Verify that wire/cable connections are tight.

    If wire/cable connections are tight, go to step 2.

    Step 2. Traverse cab left and right 90 degrees from travel lock position and verify fault has been eliminated. If not, clean slip ring segment boards (para 3-8.17) and try the VMS test again before notifying unit maintenance.

    Step 3. Go to para N-9.2 and perform BIT Status Test.

    a. Determine which subsystem is degraded. If VMS fault is indicated, go to para N-9.5 and perform VMS test. Notify unit maintenance of particular fault.

    b. Check PDIU reconfiguration advice (Appendix G.4). Determine if DEGRADED mode is acceptable. (Certain degraded subsystems will not interfere with AFCS operation or mission capability, i.e., VMS is out.) If acceptable, continue mission.

Table N-21. TROUBLESHOOTING - Continued

| MALFUNCTION | TEST OR INSPECTION | CORRECTIVE ACTION |
|---|---|---|

## AFCS - Continued

14. DU SUBSYSTEM FAULT (DEGRADED MODE) IS INDICATED.

    Step 1. Verify that wire/cable connections are tight.

    If wire/cable connections are tight, go to step 2.

    Step 2. Go to para N-9.2 and perform BIT Status Test.

    a. Determine which subsystem is degraded. Notify unit maintenance of particular fault.

    b. Determine if DEGRADED mode is acceptable. (Certain degraded subsystems will not interfere with AFCS operation or mission capability; i.e., Embedded Trainer is out.) If acceptable, continue mission.

15. WPN SUBSYSTEM FAULT (DEGRADED MODE) IS INDICATED.

    Step 1. Verify that wire/cable connections are tight.

    If wire/cable connections are tight, go to step 2.

    Step 2. Go to para N-9.2 and perform BIT Status Test.

    a. Determine which subsystem is degraded. Notify unit maintenance of particular fault.

    b. Check PDIU reconfiguration advice (Appendix G.4). Determine if DEGRADED mode is acceptable. (Certain degraded subsystems will not interfere with AFCS operation or mission capability; i.e., Tube Temp is out.) If acceptable, continue mission.

16. PDIU SUBSYSTEM FAULT (DEGRADED MODE) IS INDICATED.

    Step 1. Verify that wire/cable connections are tight.

    If wire/cable connections are tight, go to step 2.

    Step 2. Go to para N-9.2 and perform BIT Status Test.

    a. Determine which subsystem is degraded. Notify unit maintenance of particular fault.

    b. Determine if DEGRADED mode is acceptable. (Certain degraded subsystems will not interfere with AFCS operation or mission; i.e., PDIU is out.) If acceptable, continue mission.

17. PCU SUBSYSTEM FAULT (DEGRADED MODE) IS INDICATED.

    Step 1. Verify that wire/cable connections are tight.

    If wire/cable connections are tight, go to step 2.

    Step 2. Go to para N-9.2 and perform BIT Status Test.

    a. Determine which subsystem is degraded. Notify unit maintenance of particular fault.

    b. Determine if DEGRADED mode is acceptable. (Certain degraded subsystems will not interfere with AFCS operation or mission capability; i.e., PCU BIT failed.) If acceptable, continue mission.

Table N-21. TROUBLESHOOTING - Continued

| MALFUNCTION | TEST OR INSPECTION | CORRECTIVE ACTION |
|---|---|---|

## AFCS - Continued

18. MVS SUBSYSTEM FAULT (DEGRADED MODE) IS INDICATED.

**NOTE**

Make sure the 1553 termination connector is installed (para 2-22.3) if M93 radar antenna transceiver is not mounted.

Step 1. Verify that cable/harness connections are tight.

If wire/cable connections are tight, go to step 2.

Step 2. Go to para N-9.2 and perform BIT status test.

a. Determine which subsystem is degraded. Notify unit maintenance of particular fault.

b. Determine if DEGRADED mode is acceptable. (Certain degraded subsystems will not interfere with AFCS operation or mission capability; i.e. PCU bit failed.) If acceptable, continue mission.

Table N-21. TROUBLESHOOTING - Continued

| MALFUNCTION<br>TEST OR INSPECTION<br>CORRECTIVE ACTION |
|---|

## AFCS - Continued

19. AFCS POSITION DRIFTS/DRUH "OP FAIL" IS INDICATED.

### NOTE

- Infrequently, the AFCS position has been observed to drift while the howitzer is stationary, or the "NAV OUT - DRU OP FAIL" alert message is displayed, for no apparent reason. These problems have been traced to errors in communications between the AFCS and DRUH. With the GPS receiver (PLGR/DAGR) installed and the AFCS operated in a GPS aided mode, the problem will be bound to an acceptable level. If the PLGR/DAGR is off or not receiving acceptable signals from four satellites, the drift may occur to an unacceptable level.
- Unless there is an operational constraint on using GPS, it is recommended that the PLGR/DAGR be installed and the AFCS be operated in the GPS aided mode.

Follow the steps below if position is drifting when the howitzer is stationary and any of the following symptoms are observed: Note that these conditions are normal when the howitzer is travelling.

a. "ZPT" is displayed in field 6 in the top line of the display. Note that it takes about 30 seconds after the vehicle stops for a normal "ZPT" indication to clear.

b. AFCS position changes more than 10 meters.

c. The "ZUPT REQUIRED" alert message is displayed.

d. The "NAV POS UPDATE REQUESTED" alert message is displayed.

e. The "PRESS ACK WHEN TUBE STOWED" alert message is displayed when the howitzer hasn't traveled.

f. The "POS UPDATE INTERRUPTED" alert message is displayed after a NAV UPDATE is attempted.

g. The "POS UPDATE RJTD HOWITZER MOVG" alert message is displayed after a NAV UPDATE is attempted.

### NOTE

The "POSITION UPDATE REQUIRED" alert message can be triggered by several conditions. Unless accompanied by one of the above indications, it is not a symptom of position drift.

If any of the position drift symptoms is observed or the "NAV OUT - DRU OP FAIL" alert message is displayed, perform the following procedure:

Step 1. Power down the AFCS.

Step 2. Power the AFCS back up.

Step 3. Reinitialize the AFCS.

### NOTE

Do not replace the DRUH or the ACU for position drift or DRU OP FAIL problems. If cycling power, as discussed above, doesn't relieve the symptoms, notify unit maintenance.

## N-11 AFCS CONFIDENCE TESTS.

### N-11.1 Verification of Position and Direction Using Survey Data.

**NOTE**

To perform the direction tests, it is important that the spheroid and grid zone stored in the AFCS map mod are correct for the area of operation. If the AFCS spheroid and grid zone are incorrect, get a correct map mod from FDC (select GET INITIALIZATION on the FDC DATA XFER menu) or enter the correct spheroid and grid zone by selecting ENTER SPHEROID/DATUM on the SETUP AND INFORMATION menu.

During field training or combat, the position and direction data shown by the AFCS can be checked by using a surveyed location. The built-in-test (BIT) does not fully assure that the AFCS accuracy is within tolerance.

To perform the position test, two carefully surveyed points about 3-4 km apart are required, with an accuracy of 1:1000 or better.

To perform the direction test, there are three options:

- Surveyed orienting station and end of orienting line (OS/EOL). The OS should be at least 100 meters from the howitzer survey point.
- A surveyed azimuth to a distant aiming point (DAP) that is at least 1500 meters away from the survey point. A closer point may be used, but the test will not be as accurate.
- When no survey azimuth is available, a deflection test using the PANTEL is possible.

Perform the tests as follows.

N-11.1.1 Verification of Position Using Survey Points.

a. Initialize the AFCS with the howitzer left front sprocket within one meter of the first survey point. Ensure easting, northing, and altitude match the data posted on the survey marker.

**NOTE**

If a surveyed azimuth to a DAP will be used for a direction test at the second survey point, then the FDC move order should include the azimuth to DAP as the center of sector. If a manual move order is used, first enter the azimuth to DAP as the center of sector on the DEFINE SECTOR OF FIRE menu (select SECTOR OF FIRE from SETUP AND INFORMATION menu). Then by positioning howitzer at second survey point with vehicle heading aligned with center of sector, you will ensure the tube is pointed toward the DAP.

b. After the nav subsystem is fully aligned, receive a move order from FDC (destination INIT POINT) to the second survey point. If FDC is not available, enter a manual move order to the second survey point.

c. Move to the second survey point without stopping.

d. Upon arrival at the survey point, position howitzer with the left front sprocket within one meter of survey point. Wait 30 seconds before proceeding to next step.

# N-11 AFCS CONFIDENCE TESTS - CONTINUED

## N-11.1 Verification of Position and Direction Using Survey Data - Continued

N-11.1.1 Verification of Position Using Survey Points - Continued

e. With the STEER TO screen displayed, read and record AFCS position data under POSN (easting, northing, and altitude) and the range to destination (RNG) in the upper right corner of the screen. Subtract the POSN altitude from the DESTN altitude.

f. Compare the data obtained in step e with the following tolerances.

| | |
|---|---|
| RNG | 26 meters or less |
| Altitude Difference | ± 26 meters |

g. If the AFCS data is within tolerance, but the POSN easting, northing, and altitude do not match the survey marker data exactly, then press ARRIVED key and do a NAV POSN UPDATE, using the NAV POSN UPDATE screen from the SETUP AND INFORMATION menu.

h. If AFCS data is within tolerance, position test is complete. Skip the steps below and proceed to the chosen method for testing direction.

i. If the AFCS data is out of tolerance, verify the DESTN easting, northing, and altitude matches the data on the survey marker. If they do not match, record the survey marker data for later use.

j. Press ARRIVED key. Select NAV POSN UPDATE from the SETUP AND INFORMATION menu to enter the survey marker data. Do a NAV POSN UPDATE by pressing the USE ALL key.

k. After the nav subsystem is fully aligned, receive a MOVE ORDER from FDC (or do a manual move order) to the first survey point.

l. Move to the first survey point without stopping.

m. Repeat steps d through f at the first survey point. Record the data and note whether the AFCS is in or out of tolerance.

n. Press ARRIVED key. Select NAV update from the SETUP AND INFORMATION menu to enter the survey marker data. Do a NAV position update by pressing the USE ALL key.

o. After the nav subsystem is fully aligned, receive a move order from FDC (or do a manual move order) to the second survey point.

p. Move to the second survey point without stopping.

q. Repeat steps d through f at the second survey point. Record the data and note whether the AFCS is in or out of tolerance.

r. If the AFCS was out of tolerance two out of three trials, notify unit maintenance.

s. If the AFCS was in tolerance two out of three trials, press ARRIVED key. Select NAV UPDATE from the SETUP AND INFORMATION menu and enter the second survey marker data. Do a NAV POSN UPDATE by pressing USE ALL key. Proceed to the chosen method for testing direction.

N-11.1.2 Verification of Direction Using an OS/EOL.

The AFCS nav subsystem uses gyros to align the system to north. Checks of AFCS direction may be accomplished using survey points and the M2 aiming circle, or a theodolite. Perform the test as follows.

a. Ensure the howitzer is fully initialized and emplaced at the survey point on level ground. Ensure that a NAV POSN UPDATE has been done using the survey marker data.

b. Unstow the tube. Install muzzle crosshairs.

# N-11 AFCS CONFIDENCE TESTS - CONTINUED

## N-11.1 Verification of Position and Direction Using Survey Data - Continued

N-11.1.2 Verification of Direction Using an OS/EOL - Continued

c. Set up and level the aiming circle over the OS.

d. Place the azimuth of the Orienting Line (OL) on the aiming circle using the upper (recording) motion.

e. Sight the aiming circle on the EOL using the lower (non-recording) motion.

f. Sight the aiming circle toward the howitzer using the upper (recording) motion.

g. Using the primer vent hole and muzzle crosshairs, align the cannon bore on the aiming circle lens.

h. With the upper (recording) motion of the aiming circle, align the vertical crosshair on the center of the cannon bore. Aiming circle operator announces “NUMBER (SO AND SO) REFER, AIMING POINT THIS INSTRUMENT”.

i. Read the azimuth to the cannon bore. This corresponds to the back azimuth of the cannon bore.

j. If the aiming circle azimuth to the tube is greater than 3200, subtract 3200 to obtain tube pointing azimuth. If the aiming circle azimuth to the tube is less than 3200, add 3200 to obtain tube pointing azimuth.

k. Select DISPLAY FORMAT from the SETUP AND INFORMATION menu. Change display from DEFLECTION to AZIMUTH and press USE ALL key.

l. Select FIRE COMMANDS from the SETUP AND INFORMATION menu. When FIRE COMMANDS menu is displayed, press USE ALL to display a FIRE MISSION screen.

m. Read and record ACTL AZ and QUAD off the FIRE MISSION screen. AFCS operator announces “NUMBER (SO AND SO), AZIMUTH (SO MUCH)”.

n. Aiming circle operator compares the readings from steps j and m. If the difference is with ± 2 mils, the aiming circle operator announces “SAFE”.

**NOTE**

Quadrant should also be checked with a pretested gunner’s quadrant. After adjusting for breech correction, reading should compare within ± 2 mils.

o. AFCS operator compares the readings from steps k and n. If the difference is within ± 2 mils, the direction test is complete. Skip the steps below. Press EOM key on the FIRE MISSION menu to return to the SETUP AND INFORMATION menu. Select DISPLAY FORMAT and change display back to DEFLECTION and press USE ALL key.

p. If either the azimuth or quadrant difference exceeds ± 2 mils, stow tube. Select NAV UPDATE from SETUP AND INFORMATION menu. When NAV UPDATE menu is displayed, check data and correct if necessary. When data is correct, select FORCE NAV RESTART and press USE ALL key to align the nav subsystem.

q. Recheck the aiming circle level and position over the stake.

r. After the nav subsystem if fully aligned, unstow tube and repeat steps d through o.

s. If results are still out of tolerance, notify unit maintenance.

# N-11 AFCS CONFIDENCE TESTS - CONTINUED

## N-11.1 Verification of Position and Direction Using Survey Data - Continued

N-11.1.3 Verification of Direction Using an Azimuth to a DAP.

The AFCS nav subsystem uses gyros to align the system to north. Checks of AFCS direction may be accomplished using a survey point and a surveyed azimuth to a DAP at least 1500 meters away. A closer point may be used, but the test will not be as accurate. Perform the test as follows.

a. Ensure the AFCS is fully initialized and the nav subsystem is fully aligned. Ensure the howitzer is positioned with the left front sprocket within one meter of the survey point. Ensure the howitzer is pointed generally toward the DAP.

b. Unstow the tube.

c. Align the cannon bore on the DAP.

d. Select DISPLAY FORMAT from the SETUP AND INFORMATION menu. Change display from DEFLECTION to AZIMUTH and press USE ALL key.

e. Select FIRE COMMANDS from the SETUP AND INFORMATION menu. When FIRE COMMAND menu is displayed, press USE ALL to display a FIRE MISSION screen.

f. Read and record ACTL AZ and QUAD off the FIRE MISSION screen.

g. Compare the azimuth display on the AFCS (ACTL AZ) with the surveyed azimuth to the DAP. Azimuth should compare within ± 2 mils.

h. Compare the quadrant displayed on the AFCS (ACTL QUAD) with the quadrant elevation off the M145A1 Mount. Quadrant elevation should compare within ± 2 mils.

**NOTE**

Quadrant should also be checked with a pretested gunner's quadrant. After adjusting for breech correction, reading should compare within ± 2 mils.

i. If the results are within tolerance, the test is complete. Skip the steps below. Press EOM key on the FIRE MISSION menu to return to the SETUP AND INFORMATION menu. Select DISPLAY FORMAT and change display back to DEFLECTION and press USE ALL key.

j. If the results are out of tolerance, stow tube. Select NAV UPDATE from SETUP AND INFORMATION menu. When NAV UPDATE menu is displayed, check data and correct if necessary. When data is correct, select FORCE NAV RESTART and press USE ALL key to align the nav subsystem.

k. After the NAV subsystem is fully aligned, unstow tube and repeat steps c through i.

l. If results are still out of tolerance, notify unit maintenance.

# N-11 AFCS CONFIDENCE TESTS - CONTINUED

## N-11.1 Verification of Position and Direction Using Survey Data - Continued

N-11.1.4 Verification of Deflection and Quadrant.

If surveyed azimuth data is not available, you can check the AFCS and the PANTEL for a match in deflection and quadrant elevation. To perform this test, a DAP at least 1500 meters away is needed. Perform the test as follows.

**NOTE**

The howitzer may be positioned at a survey point if the position test is also being conducted. However, a survey point is not necessary to perform the deflection and quadrant test alone.

a. Receive a move order from FDC to fire point. If FDC is not available, enter a manual move order to a FIRE POINT.

b. With the EMPLACE FIRE POINT screen displayed, position howitzer with tube pointed generally toward center of sector (base azimuth).

c. Press ARRIVED and unstow tube. Install muzzle crosshairs.

d. Use default value for MAXIMUM TUBE ELEVATION and press USE ALL on the SITE DEFINITION screen. The SECTION IN ORDER AT FIRE POINT screen will be displayed.

e. Using the power control handle, traverse the tube until ACTL DEFL displays 3200 deflection on the SECTION IN ORDER screen (this is the center of sector or base azimuth).

**NOTE**

If there is no FPF or priority fire mission on the screen, you may press the LOAD key to traverse the tube to 3200 deflection. Ensure that ACTL DEFL remains on 3200 deflection when you release the LOAD key. Adjust with power control handle, if necessary.

f. Check boresight of PANTEL with M140/M140A1 alignment device.

g. Select a DAP that is at least 1500 meters away.

h. Using the Azimuth deflection knob, align the vertical hairline of the PANTEL on the DAP. Level the pitch and cross level bubbles and check alignment.

i. Rotate counter rest knob on PANTEL until 3200 appears on reset counter.

j. Using the primer vent hole and muzzle crosshairs, align the tube on the DAP.

k. Level pitch and cross level bubbles on PANTEL mount. Using the azimuth deflection knob, align vertical hairline of PANTEL on the DAP. Record PANTEL deflection reading.

l. Center elevation level vial on M145A1 mount. Record M145A1 quadrant reading.

m. Read and record the ACTL deflection (DEFL) and quadrant (QUAD) obtained on the AFCS SECTION IN ORDER screen.

n. Compare deflections and quadrants obtained in steps k, l, and m. The tolerance between readings is $\pm$ 2 mils for both deflection and quadrant.

o. If AFCS and PANTEL agree within the tolerance, the test is complete. Skip the step below.

p. If AFCS and PANTEL do not agree with the tolerance, notify unit maintenance.

# N-11 AFCS CONFIDENCE TESTS - CONTINUED

## N-11.2 Testing the Accuracy of the AFCS Elevation.

### NOTE

Before performing this test, ensure that the cannon assembly is properly equilibrated (para 3-8.2) to prevent tube elevation drift.

The AFCS elevation accuracy should be tested whenever the trunnions have been leveled for optical fire control alignment test and measurements. It is suggested that a survey point be put in at the location of these tests for the purpose of proper initialization of the AFCS.

This test is used to verify the AFCS quadrant elevation and gunner's quadrant agree at all elevations. Perform the test as follows.

a. Initialize the AFCS with the tube stowed in the travel lock.

b. When the Nav Subsystem is fully aligned, unstow tube, and recheck trunnion level using a plumbline.

c. Level the tube using a pretested gunner's quadrant on the machined surface just rear of the muzzle brake. Set the gunner's quadrant on the top (widest) surface with the feet aligned with the machined shoulder.

d. With the tube held at the level position, place the gunner's quadrant on the breech elevation seats. Measure and record breech correction.

e. Select FIRE COMMANDS from the SETUP AND INFORMATION menu. When FIRE COMMANDS menu is displayed, press USE ALL to display a FIRE MISSION screen.

f. Read and record ACTL QUAD on the FIRE MISSION screen. QUAD should be zero mils ± 0.5 mils.

g. If ACTL QUAD is not within tolerance, notify unit maintenance.

h. Set the scale of the gunner's quadrant to 100 mils plus the sum of the gunner's quadrant correction and the breech correction.

i. Place the gunner's quadrant on the breech seats. Elevate the tube (power or manual) until the bubble is centered.

j. Read and record the ACTL QUAD on the FIRE MISSION screen. If the difference between the ACTL QUAD and the tube elevation exceeds ± 0.5 mils, verify all settings. Record the difference.

k. Repeat steps h. through j., adding 100 mils elevation each time, until maximum elevation is reached. Then decrease elevation in 100 mil increments and repeat measurements.

l. Compare all differences to the tolerance of ± 0.5 mils. If the reading at any elevation exceeds the tolerance, notify unit maintenance.

# APPENDIX O

# OPERATION OF PALADIN DIGITAL FIRE CONTROL SYSTEM (PDFCS) (VERSION 2P SOFTWARE)

## TABLE OF CONTENTS


| | Page |
|---|---|
| O-1 SCOPE | O-3 |
| O-2 GENERAL | O-3 |
| O-3 PDFCS Operating Modes | O-3 |
| O-3.1 FC Mode | O-3 |
| O-3.2 Training Mode | O-4 |
| O-3.3 Normal Operation Mode | O-4 |
| O-3.4 Maintenance Mode | O-4 |
| O-3.5 FBCB2 (SA) Mode | O-4 |
| O-4 PDFCS Operating Controls and Indicators | O-5 |
| O-5 DC Power Messages | O-52 |
| O-5.1 On Auxiliary Power | O-52 |
| O-5.2 Auxiliary Power Not Available | O-53 |
| O-5.3 Vehicle and Auxiliary Power OK | O-53 |
| O-6 PDFCS Initialization | O-54 |
| O-6.1 System Power-Up | O-54 |
| O-6.2 Initializing | O-61 |
| O-6.3 Initialization After an Orderly Shutdown | O-115 |
| O-6.4 Initialization After a Catastrophic Failure | O-132 |
| O-7 PDFCS TRAVEL MODE | O-134 |
| O-7.1 Movement | O-134 |
| O-7.2 Emplacement Fire Point/Fire Area | O-139 |
| O-8 PDFCS FIRE MISSION | O-150 |
| O-8.1 Platoon Operation Center | O-152 |
| O-8.2 Firing Mission | O-154 |
| O-8.3 Ammunition Accountability | O-156 |
| O-8.4 End of Mission | O-158 |
| O-8.5 PDFCS Emergency Mission | O-159 |
| O-8.6 Direct Fire Procedures Using PDFCS | O-161 |
| O-8.7 System Menus | O-166 |
| O-9 PDFCS AND PDI FAULT DETECTION | O-206 |
| O-9.1 Power Up Built-In-Test (BIT) | O-206 |
| O-9.2 PDFCS Status | O-209 |
| O-9.3 PDI System Test | O-214 |
| O-9.4 Vehicle Motion Sensor Test | O-228 |
| O-9.5 Audio Alert Test | O-230 |
| O-9.6 Display Test | O-231 |
| O-9.7 Key and Switch Test | O-232 |
| O-9.8 Boresight Angle Entry | O-233 |
| O-9.9 Equivalent Full Charge (EFC) | O-233 |
| O-9.10 PDFCS and PDCU Abbreviations | O-238 |
| O-9.11 Software Version/Configuration Display | O-242 |
| O-9.12 CPU Environment Display | O-244 |
| O-9.13 Inductive Fuze Setter Display | O-245 |
| O-10 SYMPTOM INDEX | O-247 |
| O-11 PDFCS CONFIDENCE TESTS | O-258 |
| O-11.1 Verification of Position and Direction Using Survey Data | O-258 |
| O-11.2 Testing the Accuracy of the PDFCS Elevation | O-263 |

# LIST OF TABLES


| | Page |
|---|---|
| Table O-1 EL Panel Display | O-7 |
| Table O-2 Fire Mission Display | O-13 |
| Table O-3 Other Volley Display | O-17 |
| Table O-4 Section In Order Display | O-19 |
| Table O-5 Charge Displayed Based on Propellant Model | O-21 |
| Table O-6 U.S Shell/Fuze Combinations Cross Reference | O-22 |
| Table O-7 Urgent Messages | O-29 |
| Table O-8 High Priority Messages | O-30 |
| Table O-9 Low Priority Messages with Audio Alerts | O-33 |
| Table O-10 Low Priority Messages without Audio Alerts | O-45 |
| Table O-11 Power Up Status Display | O-58 |
| Table O-12 Network Configurations | O-64 |
| Table O-13 Paladin Fire Commands Entry Display | O-169 |
| Table O-14 Shell Model Numbers | O-177 |
| Table O-15 Fuze Model Numbers | O-177 |
| Table O-16 IFS Subsystem Status Display | O-179 |
| Table O-17 Record of Fire Select Target Display | O-188 |
| Table O-18 Record of Fire Display | O-189 |
| Table O-19 Record of Fire Data Display | O-195 |
| Table O-20 Troubleshooting | O-248 |

## O-1 SCOPE.

This appendix contains the procedures and actions necessary for proper operation of the Paladin Digital Fire Control System (PDFCS) utilizing Version 2P Software.

## O-2 GENERAL.

The Paladin Digital Fire Control System (PDFCS) performs ballistic computations and weapon control, provides the interface between the PDFCS computer and the radios, and stores data which is displayed/entered on the Display Unit (DU).

PDFCS eliminates the use of optical fire control equipment in laying vehicle for deflection and elevation during indirect fire missions. PDFCS receives target information, calculates weapons position and automatically lays the gun tube. Calls for fire are accepted directly. Communication can be performed with any authorized source.

In addition PDFCS contains a maintenance utility designed to perform initial troubleshooting of the system and a Built-In Training Device (Embedded Trainer) containing a tutorial on system operations.

## O-3 PDFCS OPERATING MODES.

PDFCS has two operational modes: Fire Control (FC) and Force XXI Battle Command Brigade and Below (FBCB2), each of these is as discussed below. Since the primary function of PDFCS is Fire Control, the terms “PDFCS” and “FC” are often used interchangeably. Since the primary function of FBCB2 is Situational Awareness (SA), the terms “FBCB2” and “SA” are often used interchangeably.

### O-3.1 FC Mode.

Refers to the PDFCS functionally to provide for fire control net connectivity, FC unit commands, fire mission messages, and Paladin system controls. The PDFCS has automatic mode control for FC mode to automatically take charge of the display upon receipt of a FC message. The operator has the capability to switch between FC and SA modes of operations.

Fire Control functions are performed during three operating modes. These modes are Training, Normal Operations, and Maintenance.

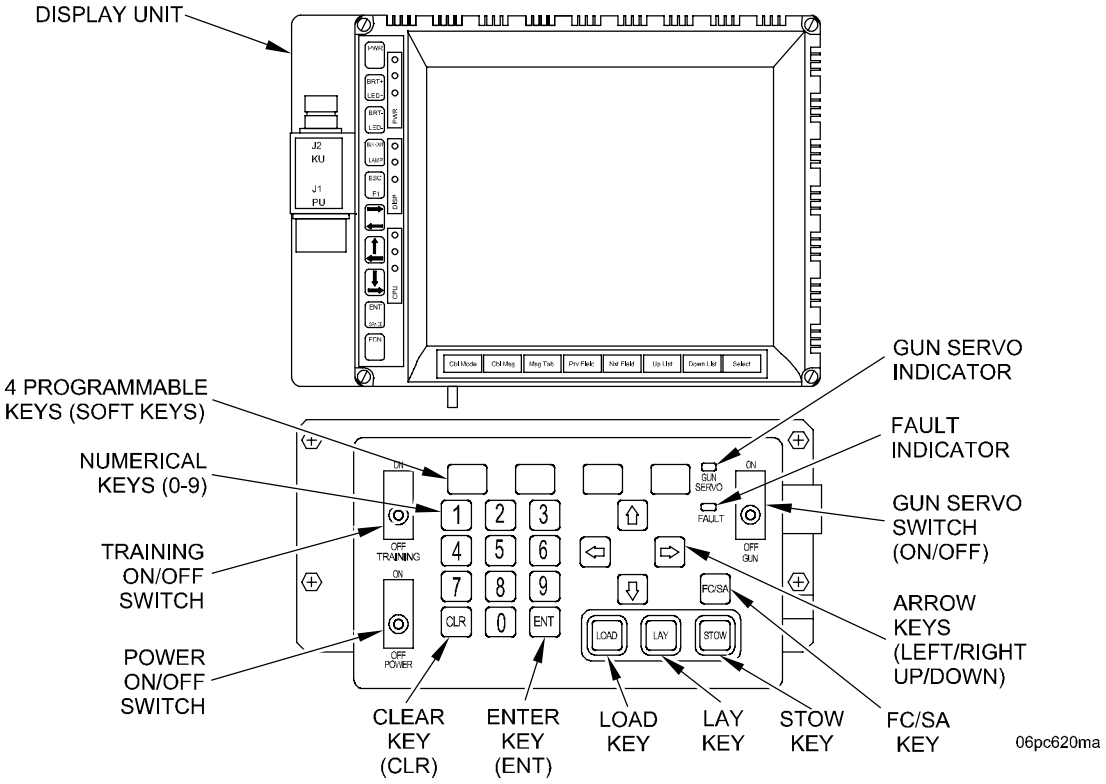

## O-3 PDFCS OPERATING MODES - CONTINUED

### O-3.2 Training Mode.

The PDFCS has a Built-In Training Device (Embedded Trainer). This can be used as a tutorial device to train, maintain, improve, and evaluate crew efficiency/performance. This function allows for simulating Move and Fire Missions under a variety of battlefield scenarios. These include: Shoot Heavy, Move Heavy, Modified Balanced, as well as Degraded conditions for Fire Control, all without need for radio communications (PDFCS simulates all radio communications so training can be accomplished without POC assets). In addition, the Embedded Trainer can be run from a Beginner's Tutorial option through a full scale scenario.

### O-3.3 Normal Operation Mode.

During the normal operation mode, there are submodes which make up initializing the system navigation, emplacement, and firing the howitzer. These submodes are initialization, travel, and fire mission.

### O-3.4 Maintenance Mode.

This mode is designed to be used by the crew to do initial troubleshooting of a failure in the PDFCS, isolate to an LRU and expedite repair, and view detailed software configuration information for each LRU/CPCI.

**NOTE**

In the SA mode, M109A6 crews should not respond to either of the following FBCB2 message alerts:

- Fire Mission
- Check Fire

These messages should only be acted upon when received in the Fire Control (FC) mode.

### O-3.5 FBCB2 (SA) Mode.

Refers to Situational Awareness and Command and Control (C2) operations provided by FBCB2. This mode provides connectivity to the Tactical Internet, a constantly updated SA picture (friendly and reported enemy/other positions, danger areas and obstacles), FBCB2 system controls as well as report, alert, planning, overlay, logistic, coordination and fire support messages.

## O-4 PDFCS OPERATING CONTROLS AND INDICATORS.

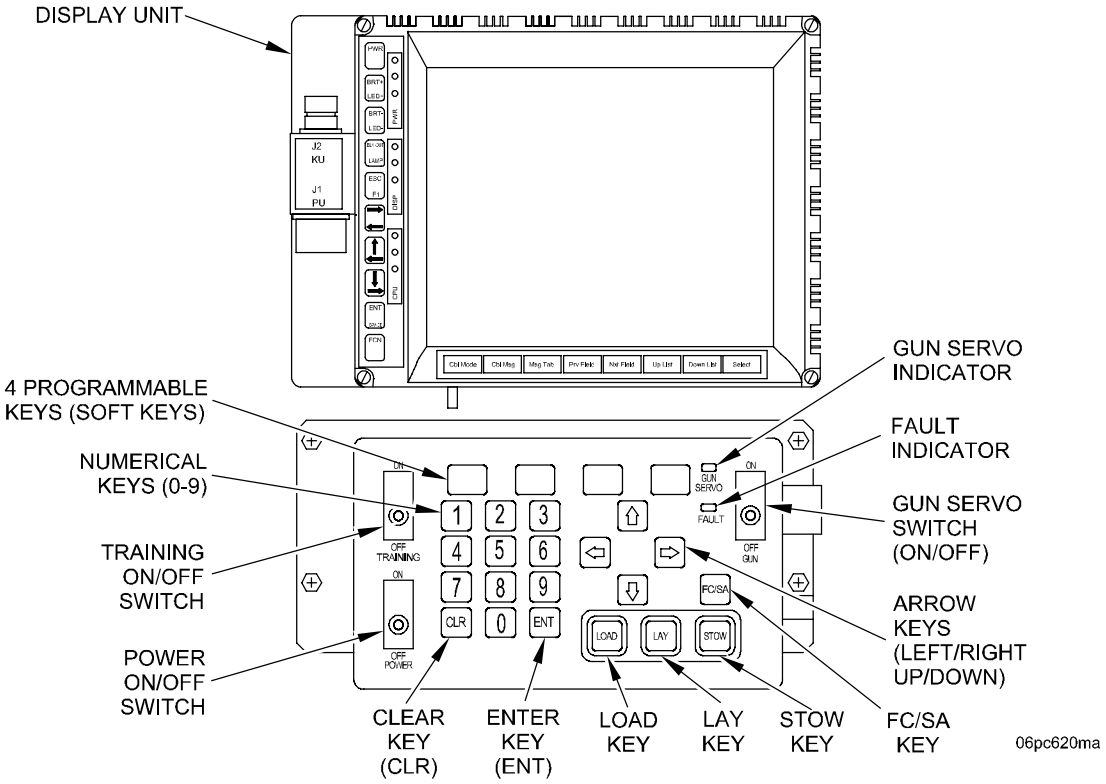


a. GUN SERVO Indicator Lamp. This amber indicator lamp will come on only during PDFCS movement of the weapon. Additionally, the lamp stays on when the servos position the weapon on command LAY.

b. GUN SERVO ON/OFF Switch. This toggle switch enables gun servo units. Lifting guard and placing switch in ON position allows PDFCS to control gun servo valves. (This is required for Gun Laying by PDFCS, also needed for STOW and LOAD commands by PDFCS.) Closing switch guard will automatically place switch in OFF position.

c. Arrow Keys (up/right/down and left). Pressing proper key will move highlighted area of display on PDU.

d. FAULT Indicator Lamp. This indicator lamp will come on when a failure has been detected by internal BIT of PDFCS.

e. STOW Key. With GUN switch ON, pressing STOW key will automatically return gun to a position above the travel lock. (Final tube positioning to secure gun in travel lock must be done with gunner's/COS control handles.)

f. LAY Key. With GUN switch ON, pressing LAY key will automatically drive gun to Commanded (CMD) position by PDFCS (in proper azimuth and elevation).

g. LOAD Key. With GUN switch ON, pressing LOAD key during high firing angles will automatically return gun to a preselected low elevation angle. This allows easier loading of gun.

(1) During Fire Mission. Pressing LOAD key during a Fire Mission will return gun to preselected load elevation and traverse gun to LAY position.

**NOTE**

If there is no FPF, the gun will traverse to the assigned center sector of fire.

(2) Prior to Fire Mission. Pressing LOAD key prior to a Fire Mission (Section in Order) will return gun to preselected load elevation and traverse to Final Protective Fire (FPF) azimuth.

## O-4 PDFCS OPERATING CONTROLS AND INDICATORS - CONTINUED

h. KEYPAD (Numerals 0 through 9, CLR--clear, and ENT--enter keys). These keys are used for entering data. The CLR key is used to delete a numeric entry within the cursor field on the display. The ENT key is used to insert a numeric entry into highlighted field on the display.

**NOTE**

If PDFCS POWER is switched to OFF, alignment data will have to be reentered at next power up. Navigation Restart is a 15-minute procedure. Closing switch guard will not place this switch in OFF position. Switch must be manually put in OFF position.

i. POWER ON/OFF Switch. Lifting the guard and placing switch in ON position powers up PDFCS. System will then automatically perform self-test (BIT). After BIT, PDFCS will control gun hydraulics when GUN ON/OFF switch is ON. At this time, some gun movement may occur. Do not power down PDFCS when entering/exiting different modes. After PDFCS has been powered down, the PDFCS will power up and be operational in approximately 3-4 minutes.

j. TRAINING ON/OFF Switch. Lifting the guard and placing switch in ON position while PDFCS is at the select operating mode menu allows operator to select Training Mode. (To exit Training Mode, either finish scenario and exit via appropriate softkey, or place TRAINING ON/OFF switch to OFF and select appropriate softkey to exit.)

k. softkeys (four). Function of keys depends on menu being displayed (worked). Lowest display line identifies function.

l. FC/SA Key. This key is used to toggle the display between PDFCS (FC) and FBCB2 (SA) modes.

m. Audio Alerts. There are two audio alerts that are sounded by the PDFCS. Type 1 is a constant repetition of alternating high and low tones of .3 seconds each. Type 2 is a contant repetition of a single tone for .2 seconds with .6 seconds of quiet between each tone.

n. PDFCS Display Unit (PDU). The PDU displays both FC and SA screens. If the fire control screen is active, the FBCB2 screen can be activated by pressing the FC/SA key on the keypad. If the FBCB2 screen is active, the fire control screen can be activated by pressing the FC/SA key on the keypad. If a user is viewing FBCB2, the display will automatically switch the FC screen if important fire control alerts occur. The PDFCS keypad buttons are disabled when FBCB2 is displayed. The PDFCS keypad is only used in conjunction with functions. All FBCB2 functions are performed using the touchscreen. When the FC screen is displayed, the format will show possible fire mission data fields, advisory messages, instructions and commands. The data fields in the FC screen are numbered as follows:

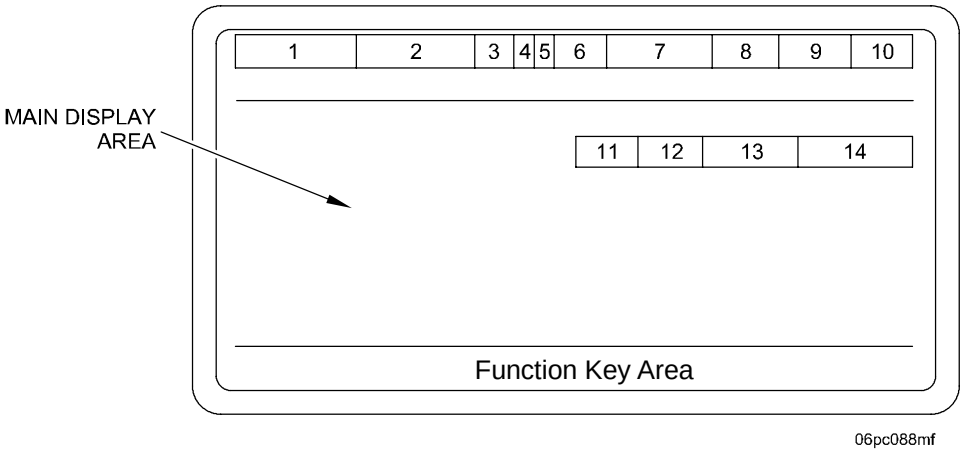

## O-4 PDFCS OPERATING CONTROLS AND INDICATORS - CONTINUED

**Table O-1. EL Panel Display**

| Field | Description | Conditions for display |
|---|---|---|
| 1 | Operational Mode Range/Values: | |
| | (1) NORMAL | (1) Indicates the normal operational mode was selected. |
| | (2) EMB TNG | (2) Indicates the training mode was selected. |
| | (3) MAINT | (3) Indicates maintenance mode was selected. |
| | (4) STE-X | (4) Indicates the STE-X has control of the system. |
| | (5) aaaaaaa | (5) Represents the Paladin software version and is only display on POWER UP STATUS. |
| | (6) Blank | (6) Indicates the software configuration data table is invalid. |
| | | Note: MV, NO MV and BAD MV shall be displayed in inverse video. |
| | (7) MV | (7) Displayed upon shot detect and a valid muzzle velocity was received from the MVS. |
| | (8) NO MV | (8) Displayed upon shot detect and no muzzle velocity was received from the MVS. |
| | (9) BAD MV | (9) Displayed upon shot detect and a muzzle velocity was received but the data was not valid. |
| 2a | Fire Mission 1 IndicatorRange/ Values: | Note: The Paladin shall remove the appropriate Fire Mission Status upon receipt of EOM, Early EOM, Cancel Checkfire By Target, or Cancel Checkfire All. |
| | (1) FM1 | (1) FM1 displayed upon receipt of a valid fire mission and field 2a is blank.<br>Inverse video=active mission.<br>Normal video=non-active mission. |
| | (2) CK1 | (2) CK1 if the FM1 fire mission is in Checkfire Target Number and Paladin is not in Checkfire All.<br>Inverse video=active mission.<br>Normal video=non-active mission. |
| | (3) CHK | (3) CHK displayed in inverse video upon receipt of a valid Check Fire All. |
| | (4) Blank | (4) Blank indicates that none of the above conditions apply. |

## O-4 PDFCS OPERATING CONTROLS AND INDICATORS - CONTINUED

**Table O-1. EL Panel Display - Continued**

| Field | Description | Conditions for display |
|---|---|---|
| 2b | Fire Mission 2 Indicator Range/ Values: | Note: The Paladin shall remove the appropriate Fire Mission Status upon receipt of EOM, Early EOM, Cancel Checkfire By Target, or Cancel Checkfire All. |
| | (1) FM2 | (1) FM2 displayed upon receipt of a valid fire mission and field 2a is FM1 or CK1.<br>Inverse video=active mission.<br>Normal video=non-active mission. |
| | (2) CK2 | (2) CK2 if the FM2 fire mission is in Checkfire Target Number and Paladin is not in Checkfire All.<br>Inverse video=active mission.<br>Normal video=non-active mission. |
| | (3) ALL | (3) ALL displayed in inverse video upon receipt of a valid Check Fire All. |
| | (4) Blank | (4) Blank indicates that none of the above conditions apply. |
| 3 | Move Order Indicator Range/ Values: | Note: MO is displayed in inverse video. |
| | (1) MO | (1) The Paladin has an active move order. |
| | (2) Blank | (2) The Paladin does not have an active move order. |
| 4 | Warning Message IndicatorRange/ Value: | Note: W is displayed in inverse video. |
| | (1) W | (1) A warning message has been queued. |
| | (2) Blank | (2) There are no warning messages for the operator to view. |
| 5 | Received Message IndicatorRange/ Values: | Note: R is displayed in inverse video. |
| | (1) R | (1) A received message has been queued. |
| | (2) Blank | (2) There are no messages for the operator to view. |

## O-4 PDFCS OPERATING CONTROLS AND INDICATORS - CONTINUED

**Table O-1. EL Panel Display - Continued**

| Field | Description | Conditions for display |
|---|---|---|
| 6 | Align Time to Go IndicatorRange/ Values: | Note: The data displayed below are listed in highest to lowest priority order. |
| | (1) ZPT | (1) Indicates a ZUPT stop is required. |
| | (2) CMD | (2) This indicates that the PDFCS has initiated a command sequence with the Navigation Device and the command sequence has not yet been completed. |
| | (3) POS | (3) This indicates that the Navigation Device has requested a position update. |
| | (4) 0-999 | (4) This three digit number indicates the number of seconds remaining before navigation alignment is complete. When the alignment has proceeded to the point where the Paladin can be fired or moved, an alert will be provided to the operation indicating that it is okay to move or shoot. The align time will continue to be updated until the "nnn" value reaches zero. If the navigation device is not able to complete the alignment within (2) seconds of the timer reaching zero, an error prompt will be presented indicating that a navigation device restart is required. |
| | (5) Blank | (5) Indicates that none of the above applies. |
| 7 | Function Status-Range/Values: | |
| | (1) N | (1) The Navigation Subsystem is - -, DEGRADED, or OUT. |
| | (2) A | (2) GPS is not supplying position data or DRUH is operating in the inertial mode; or GPS Data is invalid, EPE is greater than the good threshold, or GPS is unavailable while moving. |
| | (3) C | (3) The COMMO Subsystem is - -, DEGRADED, or OUT. |
| | (4) D | (4) Operator selects DRY FIRE from the Fire Mission Mode Selection Menu. |
| | (5) W | (5) The WPN Subsystem is - -, DEGRADED, or OUT. |
| | (6) F | (6) The IFS Subsystem is - -, OUT, DEG-MNT, DEG-GPS or DEG-BAT. |
| | (7) Blank | (7) All of the above subsystems are OK, or not in Dry Fire mode. |
| 8 | Load Key Status-Range/Values: | Note: When Load is displayed in inverse video, the tube is within the load window. |
| | (1) LOAD | (1) Indicates the load key is active. |
| | (2) Blank | (2) Indicates the load key is inactive. |
| 9 | Lay Key Status-Range/Values: | Note: When Lay is displayed in inverse video, the tube is in the Lay position. |
| | (1) LAY | (1) Indicates the Lay key is active. |
| | (2) Blank | (2) Indicates the Lay key is inactive. |

## O-4 PDFCS OPERATING CONTROLS AND INDICATORS - CONTINUED

**Table O-1. EL Panel Display - Continued**

| Field | Description | Conditions for display |
|---|---|---|
| 10 | Stow Key Status-Range/Values:<br>(1) STOW<br>(2) Blank | Note: When Stow is displayed in inverse video, the tube is in the stow window.<br>(1) Indicates the Stow key is active.<br>(2) Indicates the Stow key is inactive. |
| 11 | Mission Priority<br>Range/Value<br>(1) FPF<br>(2) PRI<br>(3) Blank | (1) Indicates that the mission is a Final Protective Fire mission.<br>(2) Indicates that the mission is a Priority mission.<br>(3) Indicates that the mission is a Normal mission. |
| 12 | Mission Urgency<br>Range/Value<br>(1) DC<br>(2) TOT<br>(3) Blank | (1) Indicates that the mission has an associated Danger Close status.<br>(2) Indicates that the PDFCS is processing a Time On Target fire mission.<br>(3) Indicates that the PDFCS has Normal urgency for this mission. |
| 13 | Tube Temperatue Color Status<br>Range/Value<br>(1) COLD<br>(2) WARM<br>(3) HOT<br>(4) Blank | (1) Indicates that the tube temperature is in a green status.<br>(2) Indicates that the tube temperature is in an amber status.<br>(3) Indicates that the tube temperature is in a red status.<br>(4) Indicates that the tube temperature is not available. |
| 14 | Safe Time in Tube Status<br>Range/Value<br>(1) mm<br>(2) Blank | (1) Indicates the current safe time for around to be in the tube. Time is shown in minutes.<br>WARM 20 -- Safe time in tube 20 min<br>WARM 15 -- Safe time in tube 15 min<br>WARM 10 -- Safe time in tube 10 min<br>WARM 05 -- Safe time in tube 5 min<br>0 MIN -- Indicates the tube is HOT.<br>(2) Indicates that the tube is cold and there is no limit on the safe time in the tube |

## O-4 PDFCS OPERATING CONTROLS AND INDICATORS - CONTINUED

The main display area contains the menu, information, and data entry areas required for operating the PDFCS. The specific data shown in this area is dependent on the functions being performed. Various instructions and warnings will appear in this area, as necessary. Below are some of the displays and data requirements for the main display area.

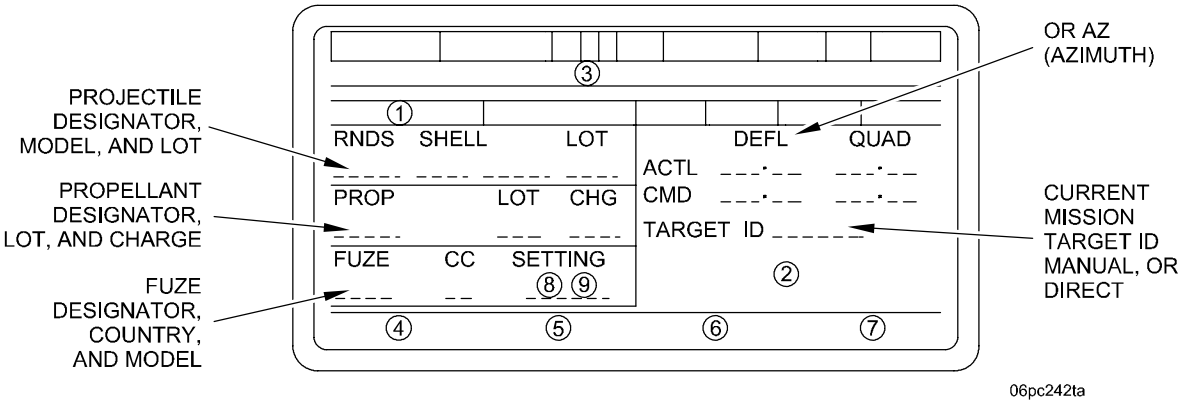


Listed below are the legal values for each field of FIRE MISSION display.

### NOTE

The 1/1, 1/2, and 2/2 data shall not be displayed for direct or FDC fire commands fire missions.

VLY / = current volley being displayed: 1/1, 1/2 or 2/2
RNDS = Number of rounds remaining to fire 1..99 or blank
SHELL = Shell model only (see Table O-6) or blank
SHELL LOT = A..Z or blank
PROP = Propellant model (see Table O-6) or blank
PROP LOT = A..Z or blank
CHG = Propellant charge designator (see Table O-5) or blank
FUZE = Fuze model only (see Table O-6) or blank
FUZE SETTING = Computed fuze setting, “PD” or “DELAY”
DEFL or AZ = 0.0..6399.9 mils or blank
QUAD = −200.0..+1600.0 mils or blank
TARGET ID = Current mission target identification

## O-4 PDFCS OPERATING CONTROLS AND INDICATORS - CONTINUED

The display data format for the FIRE MISSION screen follows in Table O-2.

### NOTE

- The alerts marked with an asterisk (*) will result in an “OK TO SHOOT?” “YES” “NO” short error message to the PDFCS operator.
- The operator must determine if mission is safe to shoot by notifying the FDC and either accept or abort as instructed.
- If the operator presses YES, then the PDFCS shall continue to process the fire mission.
- If the fire mission is a single aimpoint mission or if the violation applies to the entire mission and operator presses NO then the PDFCS shall abort the fire mission.
- If the fire mission has multiple aimpoints and the operator presses NO then the PDFCS shall transition to the next aimpoint.
- If the fire mission is a multiple phase fire mission and the violation occurs for only one phase, the violation and error message will be displayed before continuing the mission.
- If the fire mission has multiple aimpoints and the violation does not apply to every aimpoint, the violation and error message will be displayed for each aimpoint that has the violation, when the data for that aimpoint is displayed the first time.
- The “SAFE FIRE AREA VIOLATION” warning shall be the first to appear. The additional information in this field shall remain until it is superseded or no longer applies.

## O-4 PDFCS OPERATING CONTROLS AND INDICATORS - CONTINUED

**Table O-2. Fire Mission Display**

| Field | Description | Conditions for display |
|---|---|---|
| 1 | SHEAF INFORMATION<br>Range/Values:<br>(1) Blank<br>(2) SHEAF PT<br>(3) SHEAF X/XX | <br><br>(1) Fire mission is not a sheaf mission.<br>(2) This gun is participating in a multi-gun sheaf.<br>(3) This gun is participating in a single gun sheaf where X is the current aimpoint number and XX is the number of aimpoints. |
| 2 | Range/Values:<br>(1) Blank<br>(2) SAFE FIRE AREA VIOLATION*<br>(3) REMEMBER TO UPDATE INVENTORY<br>(4) WARNING TUBE IS NOT IN LAY POSITION<br>(5) TUBE MUST BE LAID MANUALLY<br>(6) CALL FDC IF ROUND IN TUBE<br>(7) PRESS SHOT OR CLEAR TO ACK CEASELOAD<br>(8) SECTOR OF FIRE VIOLATION*<br>(9) SITE VIOLATION*<br>(10) INSUFFICIENT AMMO SHELL/ FUZE/PROP*<br>(11) INSUFFICIENT AMMO SHELL/ FUZE*<br>(12) INSUFFICIENT AMMO SHELL/ PROP*<br>(13) INSUFFICIENT AMMO FUZE/ PROP* | <br>(1) Displayed when none of the following apply.<br>(2) The aimpoint or trajectory terminates outside the Safe Fire Area.<br>(3) Direct fire or FDC fire commands missions.<br>(4) The Weapon Controller is operational and the tube is not in the Lay window.<br>(5) The Weapon Controller is not operational.<br>(6) Awaiting tube clear and crew is not authorized to fire.<br>(7) The Paladin has received a CEASELOAD request.<br>(8) Gun-target line is outside the defined sector of fire.<br>(9) Firing parameters violate defined mask.<br>(10) Insufficient ammo quantities.<br>(11) Insufficient shell/fuze quantities.<br>(12) Insufficient shell/prop quantities.<br>(13) Insufficient fuze/prop quantities. |

## O-4 PDFCS OPERATING CONTROLS AND INDICATORS - CONTINUED

**Table O-2. Fire Mission Display - Continued**

| Field | Description | Conditions for display |
|---|---|---|
| | (14) INSUFFICIENT AMMO SHELL* | (14) Insufficient shell quantities. |
| | (15) INSUFFICIENT AMMO FUZE* | (15) Insufficient fuze quantities. |
| | (16) INSUFFICIENT AMMO PROP* | (16) Insufficient prop quantities. |
| | (17) MAX TUBE EL EXCEEDED* | (17) Computed QE exceeds the defined maximum elevation. |
| | (18) MINIMUM QE VIOLATED* | (18) The gun tube has violated the minimum QE as entered by the PDFCS operator in the ENTER MINIMUM FIRING QE display. |
| 3 | Range/Values: | |
| | (1) FIRE WHEN READY | (1) Fire at will. |
| | (2) FIRE WHEN READY- FDC COMP | (2) Fire at will and FDC computed the fire mission. |
| | (3) UNDER VOICE ORDERS | (3) All commands are received via voice communications. |
| | (4) COMPUTING DO NOT LOAD | (4) The Paladin is computing or waiting for an operator response. |
| | (5) DO NOT LOAD | (5) Do not load mission. |
| | (6) DO NOT LOAD- FDC COMP | (6) Do not load mission computed by the FDC. |
| | (7) LOAD LAY THEN PRESS READY | (7) At My Command or Copperhead mission. |
| | (8) WAIT FOR COMMAND | (8) At My Command after ready. |
| | (9) WAIT FOR COMMAND- FDC COMP | (9) At My Command after ready and the FDC computed the mission. |
| | (10) WAIT NNN SECONDS | (10) Time on target, time to fire, or continuous fire interval mission and the operator must wait NNN seconds before firing the howitzer. |
| | (11) WAIT NNN SECONDS- FDC COMP | (11) Time on target, time to fire, or continuous fire interval mission, the FDC computed the mission and the operator must wait NNN seconds before firing the howitzer. |
| | (12) FIRE | (12) Command to fire. |
| | (13) FIRE-FDC COMP | (13) Command to fire and FDC computed the mission. |
| | (14) FPF END OF MISSION | (14) EOM or CEASELOAD received during FPF mission. |
| | (15) EARLY END OF MISSION | (15) EOM received before all rounds are fired. |
| | (16) CEASELOAD | (16) CEASELOAD received after load but before all rounds are fired. |

## O-4 PDFCS OPERATING CONTROLS AND INDICATORS - CONTINUED

**Table O-2. Fire Mission Display - Continued**

| Field | Description | Conditions for display |
|---|---|---|
| 4 | SOFTKEY POSITION 1 Range/Values: | |
| | (1) Blank | (1) SHOT or READY do not apply. |
| | (2) SHOT | (2) Used to initiate SHOT processing if not automatically performed when a round is fired. |
| | (3) READY | (3) Used for At My Command fire missions, and notifies FDC the Paladin is ready to fire. |
| 5 | SOFTKEY POSITION 2 Range/Values: | |
| | (1) Blank | (1) CLEAR or OTHER VLY do not apply. |
| | (2) CLEAR | (2) The Paladin requires notification of tube clear. |
| | (3) OTHER VLY | (3) Other volley information is available for operator viewing. |
| 6 | SOFTKEY POSITION 3 Range/Values: | |
| | (1) Blank | (1) CHECK does not apply. |
| | (2) CHECK | (2) For Paladin operator initiated Check Fire. |
| 7 | SOFTKEY POSITION 4 Range/Values: | |
| | (1) Blank | (1) No active fire mission. Note: If the operator presses the EOM or ABORT softkey, the Paladin shall display the operator alerts “ARE YOU SURE?” “YES” “NO” for EOM, and “ABORT ARE YOU SURE?” “YES” “NO” for Abort. |
| | (2) ABORT | (2) Fire mission other than direct or FDC Fire Commands is active. |
| | (3) EOM | (3) Direct or FDC Fire Commands fire mission is active. |
| 8 | FUZE MODE Range/Values: | Note: If the shell is XM982/M982, then the values shall be displayed in inverse video before the fuze is sucessfully set. For XM982 TTF missions, the fuze setting mode shall not be displayed if the TTF is greater than 7 minutes. |
| | (1) PD | (1) Fuze Mode is Point Detonating or “Q”. |
| | (2) DLY | (2) Fuze Mode is Delay. |
| | (3) TI | (3) Fuze Mode is Time. |
| | (4) VT | (4) Fuze Mode is Variable Time. |
| | (5) Blank | (5) If manual, direct, or copperhead fire mission. |
| 9 | FUZE SETTING TIME Range/Values: | Note: The Excalibur countdown timer will start at 420.0 seconds and shall be displayed in inverse video when XM982 is successfully set. |
| | (1) NNN.N (where NNN.N is the time setting in seconds.) | (1) Fuze setting in seconds or the Excalibur Countdown timer in seconds. |
| | (2) NN PP (where NN is the fuze setting and PPP is the PRF Code | (2) Shell is M712. |
| | (3) Blank | (3) If fuze mode is PD or DLY and shell is not XM982 or if an XM982 mission and the fuze has not been successfully set. |

## O-4 PDFCS OPERATING CONTROLS AND INDICATORS - CONTINUED

The following alerts shall appear if the operator presses the LOAD or LAY keys and the tube transitions across the minimum quadrant elevation:

"MINIMUM QE VIOLATED" "ACK" - The gun tube has violated minimum QE entered by the operator.

"MINIMUM QE NO LONGER VIOLATED" "ACK" - The gun tube no longer violates the minimum QE entered by the operator.

A type 2 audio alert shall be generated until the ACK key is pressed.

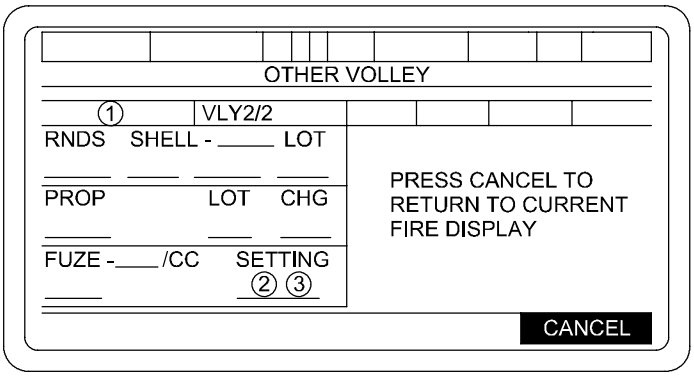


06pc243t

Listed below are the legal values for each field of the OTHER VOLLEY display:

RNDS = 1..99
SHELL = Shell model (see Table O-6)
SHELL LOT = A..Z
PROP = Propellant model (see Table O-6)
PROP LOT = A..Z
CHG = Propellant charge designator (see Table O-5)

## O-4 PDFCS OPERATING CONTROLS AND INDICATORS - CONTINUED

**Table O-3. Other Volley Display**

| Field | Description | Conditions for display |
|---|---|---|
| 1 | SHEAF INFORMATION<br>Range/Values:<br>(1) Blank<br>(2) SHEAF PT<br>(3) SHEAF X/XX | <br><br>(1) Fire mission is not a sheaf mission.<br>(2) This gun is participating in a multi-gun sheaf.<br>(3) This gun is conducting a single gun sheaf where:<br>X = Current aimpoint number<br>XX = Number of aimpoints |
| 2 | FUZE MODE<br>Range/Values:<br>(1) PD<br>(2) DLY<br>(3) TI<br>(4) VT | <br><br>(1) Fuze Mode is Point Detonating or “Q”.<br>(2) Fuze Mode is Delay.<br>(3) Fuze Mode is Time.<br>(4) Fuze Mode is Variable Time. |
| 3 | FUZE TIME SETTING<br>Range/Values:<br>(1) NNN.N (where NNN.N is the time setting in seconds.)<br>(2) Blank | <br><br>(1) Fuze setting in seconds.<br>(2) If fuze mode is PD or DLY and shell is not XM982 or if an XM982 mission. |

## O-4 PDFCS OPERATING CONTROLS AND INDICATORS - CONTINUED

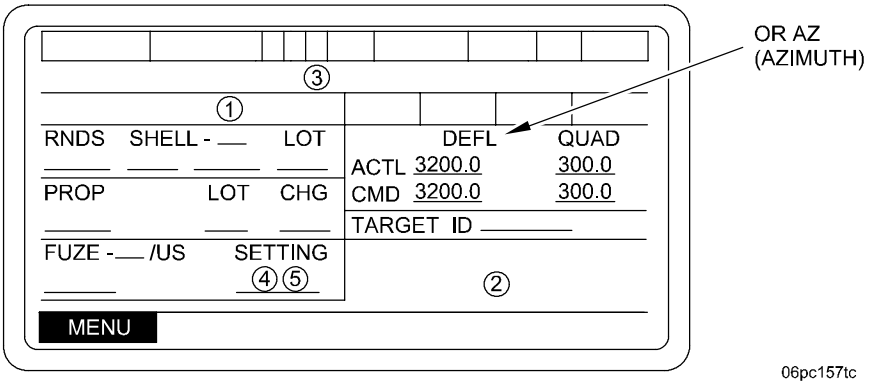


Listed below are the legal values for each field of the SECTION IN ORDER display:

RNDS = 0..99 or blank
SHELL = Shell model only (see Table O-6) or blank
SHELL LOT = A..Z or blank
PROP = Propellant model (see Table O-6) or blank
PROP LOT = A..Z or blank
PROP CHG = Propellant charge designator (see Table O-6) or blank
DEFL (or AZ) = 0.0..6399.9 mils
QUAD = -200.0..+1600.0 mils
TARGET ID = FPF/PRI target identification if a target exists; otherwise blank

The display data format for the SECTION IN ORDER screen follows in Table O-4.

## O-4 PDFCS OPERATING CONTROLS AND INDICATORS - CONTINUED

**Table O-4. Section In Order Display**

| Field | Description | Conditions for display |
|---|---|---|
| 1 | FPF/PRI STATUS<br>Range/Value: | |
| | (1) BLANK | (1) Displayed when no FPF/PRI exists. |
| | (2) COMPUTING FPF/PRI | (2) Displayed while computing Fire MIssion data for FPF/PRI. |
| | (3) NO FPF/PRI EXISTS | (3) Displayed when the FPF/PRI has not been received. |
| | (4) UNABLE TO COMPUTE | (4) Displayed when the Paladin is unable to compute a ballistic solution for FPF/PRI. |
| | (5) SECTOR VIOLATION | (5) Displayed when the commanded deflection for FPF/PRI is outside the Sector of Fire. |
| | (6) MASK VIOLATION | (6) Displayed when the FPF/PRI Firing Data violates Mask. |
| | (7) INSUFFICIENT AMMO | (7) Displayed when the Ammo inventory is insufficient to support all phases of Fire Mission. |
| | (8) NO FUZE INVENTORY | (8) Displayed when the specified Fuze not in inventory. |
| | (9) NO PROJ INVENTORY | (9) Displayed when the specified Proj not in inventory. |
| | (10) NO PROP IN-VENTORY | (10) Displayed when the specified Prop not in inventory. |
| | (11) BAD PROJ LOT MODEL | (11) Displayed when the specified Proj Lot/Model conflict. |
| | (12) NO AMMO INV COMBO | (12) Displayed when the specified Ammo combination is not in inventory. |
| | (13) INVALID AMMO COMBO | (13) Displayed when the specified shell/fuze/prop is invalid. |
| | (14) INSUFFICIENT RANGE | (14) Displayed when the Paladin can not range the target. |
| | (15) NO SOLUTION | (15) Displayed when the Paladin can not compute a firing solution. |
| | (16) NOT FPF TYPE MISSION | (16) Displayed when in an active FPF(Adjust Fire), and an EOM/RAT is received with refinement data. |
| | (17) UNASSIGNED FPF/PRI | (17) Displayed when an FPF/PRI stored target is received and the fire mission is not assigned to this gun. |
| | (18) TARGET TOO CLOSE | (18) Displayed when an FPF/PRI has been established and Paladin has moved too close to range the target. |
| | (19) TUBE EL VIOLATION | (19) Displayed when an FPF/PRI stored target at a fire point or fire area, and a tube elevation violation has been detected during the mask result checks. |
| | (20) FDC COMP (INVERSE VIDEO) | (20) Displayed when an FPF/PRI stored target at a fire point or fire area, and the fire mission was computed by the FDC. |

## O-4 PDFCS OPERATING CONTROLS AND INDICATORS - CONTINUED

**Table O-4. Section in Order Display - Continued**

| Field | Description | Conditions for display |
|---|---|---|
| 2 | SECTION IN ORDER STATUS<br>Range/Value:<br>(1) SECTION IN ORDER AT FIRE POINT<br>(2) SECTION IN ORDER AT IN ROUTE POINT<br>(3) SECTION IN ORDER WITHIN FIRE AREA | <br><br>(1) Arrived at a Fire Point.<br>(2) Arrived at any point short of Fire Point or Fire Area.<br>(3) Arrived within the Fire Area radius as defined in the Move Order. |
| 3 | CONTROL STATUS<br>Range/Values:<br>(1) DO NOT MOVE/DO NOT LOAD<br>(2) DO NOT MOVE<br>(3) MOVES ALLOWED<br>(4) MOVES ALLOWED/DO NOT LOAD | <br><br>(1) Arrived at Fire Point and an FPF/PRI exists.<br>(2) Arrived at Fire Point and NO FPF/PRI exists.<br>(3) Arrived at Fire Area and and NO FPF/PRI exists.<br>(4) Arrived at Fire Area and an FPF/PRI exists. |
| 4 | FUZE MODE<br>Range/Values:<br>(1) PD<br>(2) DLY<br>(3) TI<br>(4) VT<br>(5) Blank | <br><br>(1) Fuze Mode is Point Detonating or “Q”.<br>(2) Fuze Mode is Delay.<br>(3) Fuze Mode is Time.<br>(4) Fuze Mode is Variable Time.<br>(5) If copperhead fire mission or an XM982 or M892 fire mission is in DNL status. |
| 5 | FUZE SETTING TIME<br>Range/Values:<br>(1) NNN.N (where NNN.N is the time setting in seconds.)<br>(2) NN PPP (where NNN.N is the fuze setting and PPP is the PRF Code)<br>(3) Blank | <br><br>(1) Fuze setting in seconds.<br>(2) Shell is M712.<br>(3) If fuze mode is PD or DLY and shell is not XM 982 or if an XM982 mission. |

## O-4 PDFCS OPERATING CONTROLS AND INDICATORS - CONTINUED

**Table O-5. Charge Displayed Based on Propellant Model**

| Charge Displayed | Based on Propellant Model |
|---|---|
| 3G, 4G, 5G | M3, M3A1, M3A1BG, M3C2, DM62 |
| 3G, 4G, 5G, 6G | MLE56 |
| 6W, 7W, 8W, 9W, 9BW | MLE69 |
| 3W, 4W, 5W, 6W, 7W | M4A1, M4A2, M4C3, M4C4, DM42, DM42B1, NM23 |
| 8 | M119A1, NR13C1 |
| 7R | M119A2, M119A2BG, EBO-5, DM52 |
| 8R | M203 |
| 8S | M203A1 |
| 1L, 2L | M231 |
| 3H, 4H, 5H | M232, M232A1 |

# O-4 PDFCS OPERATING CONTROLS AND INDICATORS - CONTINUED

## Table O-6. U.S Shell/Fuze Combinations Cross Reference

| Shell | | Fuze | | | | | | | | | | | | Propellants | | |
|---|---|---|---|---|---|---|---|---|---|---|---|---|---|---|---|---|
| | | Q | | D | | CP | | CPD | | TI | | VT | | | | |
| CC | Model | CC | Model | CC | Model | CC | Model | CC | Model | CC | Model | CC | Model | CC | Model | Charges |
| | | | | | | | | | | | | | | | | |
| US | M718 | | | | | | | | | US | M577 | | | US | M3A1 | 3-5 |
| FCI 155-AR-A | | | | | | | | | | US | M577A1 | | | US | M4A1 | 3-7 |
| Supplement 4 | | | | | | | | | | US | M762 | | | US | M4A2 | 3-7 |
| | | | | | | | | | | US | M762A1 | | | US | M119A1 | 8 |
| | | | | | | | | | | | | | | US | M119A2 | 7R |
| | | | | | | | | | | | | | | US | M231 | 1-2 |
| | | | | | | | | | | | | | | US | M232 | 3-4 |
| | | | | | | | | | | | | | | US | M232A1 | 3-4 |
| | | | | | | | | | | | | | | | | |
| US | M718A1 | | | | | | | | | US | M577 | | | US | M3A1 | 3-5 |
| FCI 155-AR-A | | | | | | | | | | US | M577A1 | | | US | M4A1 | 3-7 |
| Supplement 4 | | | | | | | | | | US | M762 | | | US | M4A2 | 3-7 |
| | | | | | | | | | | US | M762A1 | | | US | M119A1 | 8 |
| | | | | | | | | | | | | | | US | M119A2 | 7R |
| | | | | | | | | | | | | | | US | M231 | 1-2 |
| | | | | | | | | | | | | | | US | M232 | 3-4 |
| | | | | | | | | | | | | | | US | M232A1 | 3-4 |
| | | | | | | | | | | | | | | | | |
| US | M741 | | | | | | | | | US | M577 | | | US | M3A1 | 3-5 |
| FCI 155-AR-A | | | | | | | | | | US | M577A1 | | | US | M4A1 | 3-7 |
| Supplement 4 | | | | | | | | | | US | M762 | | | US | M4A2 | 3-7 |
| | | | | | | | | | | US | M762A1 | | | US | M119A1 | 8 |
| | | | | | | | | | | | | | | US | M119A2 | 7R |
| | | | | | | | | | | | | | | US | M231 | 1-2 |
| | | | | | | | | | | | | | | US | M232 | 3-4 |
| | | | | | | | | | | | | | | US | M232A1 | 3-4 |
| | | | | | | | | | | | | | | | | |
| US | M741A1 | | | | | | | | | US | M577 | | | US | M3A1 | 3-5 |
| FCI 155-AR-A | | | | | | | | | | US | M577A1 | | | US | M4A1 | 3-7 |
| Supplement 4 | | | | | | | | | | US | M762 | | | US | M4A2 | 3-7 |
| | | | | | | | | | | US | M762A1 | | | US | M119A1 | 8 |
| | | | | | | | | | | | | | | US | M119A2 | 7R |
| | | | | | | | | | | | | | | US | M231 | 1-2 |
| | | | | | | | | | | | | | | US | M232 | 3-4 |
| | | | | | | | | | | | | | | US | M232A1 | 3-4 |
| | | | | | | | | | | | | | | | | |
| US | M692 | | | | | | | | | US | M577 | | | US | M3A1 | 3-5 |
| FCI 155-AR-A | | | | | | | | | | US | M577A1 | | | US | M4A1 | 3-7 |
| Supplement 3 | | | | | | | | | | US | M762 | | | US | M4A2 | 3-7 |
| | | | | | | | | | | US | M762A1 | | | US | M119A1 | 8 |
| | | | | | | | | | | | | | | US | M119A2 | 7R |
| | | | | | | | | | | | | | | US | M231 | 1-2 |
| | | | | | | | | | | | | | | US | M232 | 3-4 |
| | | | | | | | | | | | | | | US | M232A1 | 3-4 |

# O-4 PDFCS OPERATING CONTROLS AND INDICATORS - CONTINUED

## Table O-6. U.S Shell/Fuze Combinations Cross Reference - Continued

| Shell | | Fuze | | | | | | | | | | | | Propellants | | |
|---|---|---|---|---|---|---|---|---|---|---|---|---|---|---|---|---|
| | | Q | | D | | CP | | CPD | | TI | | VT | | | | |
| CC | Model | CC | Model | CC | Model | CC | Model | CC | Model | CC | Model | CC | Model | CC | Model | Charges |
| | | | | | | | | | | | | | | | | |
| US | M731 | | | | | | | | | US | M577 | | | US | M3A1 | 3-5 |
| FCI 155-AR-A | | | | | | | | | | US | M577A1 | | | US | M4A1 | 3-7 |
| Supplement 3 | | | | | | | | | | US | M762 | | | US | M4A2 | 3-7 |
| | | | | | | | | | | US | M762A1 | | | US | M119A1 | 8 |
| | | | | | | | | | | | | | | US | M119A2 | 7R |
| | | | | | | | | | | | | | | US | M231 | 1-2 |
| | | | | | | | | | | | | | | US | M232 | 3-4 |
| | | | | | | | | | | | | | | US | M232A1 | 3-4 |
| US | M712 | | | | | | | | | | | | | US | M3A1 | 4-5 |
| FCI 155-AS-A | | | | | | | | | | | | | | US | M4A1 | 4-7 |
| | | | | | | | | | | | | | | US | M4A2 | 4-7 |
| | | | | | | | | | | | | | | US | M119A1 | 8 |
| | | | | | | | | | | | | | | US | M119A2 | 7R |
| | | | | | | | | | | | | | | US | M231 | 2 |
| | | | | | | | | | | | | | | US | M232 | 3 |
| | | | | | | | | | | | | | | US | M232A1 | 3 |
| | | | | | | | | | | | | | | | | |
| US | M107DC | US | M557 | US | M557 | US | MK399 | US | MK399 | US | M564 | US | M728 | US | M3A1 | 3-5 |
| FCI 155-AM-B | | US | M739 | US | M739 | | | | | US | M582 | US | M732 | US | M4A1 | 3-7 |
| | | US | M739A1 | US | M739A1 | | | | | US | M582A1 | US | M732A2 | US | M4A2 | 3-7 |
| | | US | M782 | US | M782 | | | | | US | M767 | US | M782 | US | M119A1 | 8 |
| | | US | MK399 | US | MK399 | | | | | US | M767A1 | | | US | M119A2 | 7R |
| | | US* | M582 | | | | | | | US | M782 | | | US | M231 | 1-2 |
| | | US* | M582A1 | | | | | | | | | | | US | M232 | 3-4 |
| | | US* | M564 | | | | | | | | | | | US | M232A1 | 3-4 |
| | | US* | M767 | | | | | | | | | | | | | |
| | | US* | M767A1 | | | | | | | | | | | | | |
| | | US* | M728 | | | | | | | | | | | | | |
| | | US* | M732 | | | | | | | | | | | | | |
| | | US* | M732A2 | | | | | | | | | | | | | |
| | | | | | | | | | | | | | | | | |
| US | M449A1 | | | | | | | | | US | M565 | | | US | M3A1 | 3-5 |
| FCI 155-AM-B | | | | | | | | | | US | M577 | | | US | M4A1 | 3-7 |
| Supplement 6 | | | | | | | | | | US | M577A1 | | | US | M4A2 | 3-7 |
| | | | | | | | | | | US | M762 | | | US | M119A1 | 8 |
| | | | | | | | | | | US | M762A1 | | | US | M119A2 | 7R |
| | | | | | | | | | | | | | | US | M231 | 1-2 |
| | | | | | | | | | | | | | | US | M232 | 3-4 |
| | | | | | | | | | | | | | | US | M232A1 | 3-4 |
| | | | | | | | | | | | | | | | | |
| US | M483A1 | | | | | | | | | US | M577 | | | US | M3A1 | 3-5 |
| FCI 155-AR-A | | | | | | | | | | US | M577A1 | | | US | M4A1 | 3-7 |
| Supplement 1 | | | | | | | | | | US | M762 | | | US | M4A2 | 3-7 |
| | | | | | | | | | | US | M762A1 | | | US | M119A1 | 8 |
| | | | | | | | | | | | | | | US | M119A2 | 7R |
| | | | | | | | | | | | | | | US | M231 | 1-2 |
| | | | | | | | | | | | | | | US | M232 | 3-4 |
| | | | | | | | | | | | | | | US | M232A1 | 3-4 |

US*-TI or VT fuzes in the point detonating mode

# O-4 PDFCS OPERATING CONTROLS AND INDICATORS - CONTINUED

## Table O-6. U.S Shell/Fuze Combinations Cross Reference - Continued

| Shell | | Fuze | | | | | | | | | | | | Propellants | | |
|---|---|---|---|---|---|---|---|---|---|---|---|---|---|---|---|---|
| | | Q | | D | | CP | | CPD | | TI | | VT | | | | |
| CC | Model | CC | Model | CC | Model | CC | Model | CC | Model | CC | Model | CC | Model | CC | Model | Charges |
| | | | | | | | | | | | | | | | | |
| US | M795 | US | M557 | US | M557 | US | MK399 | US | MK399 | US | M564 | US | M732 | US | M3A1 | 3-5 |
| FCI 155-AR-A | | US | M739 | US | M739 | | | | | US | M582 | US | M732A2 | US | M4A1 | 4-7 |
| | | US | M739A1 | US | M739A1 | | | | | US | M582A1 | US | M782 | US | M4A2 | 4-7 |
| | | US | M782 | US | M782 | | | | | US | M767 | | | US | M119A1 | 8 |
| | | US | MK399 | US | MK399 | | | | | US | M767A1 | | | US | M119A2 | 7R |
| | | US* | M582 | | | | | | | US | M782 | | | US | M203 | 8R |
| | | US* | M582A1 | | | | | | | | | | | US | M203A1 | 8S |
| | | US* | M564 | | | | | | | | | | | US | M231 | 1-2 |
| | | US* | M767 | | | | | | | | | | | US | M232 | 3-5 |
| | | US* | M767A1 | | | | | | | | | | | US | M232A1 | 3-5 |
| | | US* | M732 | | | | | | | | | | | | | |
| | | US* | M732A2 | | | | | | | | | | | | | |
| | | | | | | | | | | | | | | | | |
| US | M864 | | | | | | | | | US | M577 | | | US | M4A1 | 7 |
| FCI 155-AU-A | | | | | | | | | | US | M577A1 | | | US | M4A2 | 7 |
| | | | | | | | | | | US | M762 | | | US | M119A1 | 8 |
| | | | | | | | | | | US | M762A1 | | | US | M119A2 | 7R |
| | | | | | | | | | | | | | | US | M203 | 8R |
| | | | | | | | | | | | | | | US | M203A1 | 8S |
| | | | | | | | | | | | | | | US | M232 | 3-5 |
| | | | | | | | | | | | | | | US | M232A1 | 3-5 |
| | | | | | | | | | | | | | | | | |
| US | M864A1 | | | | | | | | | US | M577 | | | US | M4A1 | 7 |
| FCI 155-AU-A | | | | | | | | | | US | M577A1 | | | US | M4A2 | 7 |
| | | | | | | | | | | US | M762 | | | US | M119A1 | 8 |
| | | | | | | | | | | US | M762A1 | | | US | M119A2 | 7R |
| | | | | | | | | | | | | | | US | M203 | 8R |
| | | | | | | | | | | | | | | US | M203A1 | 8S |
| | | | | | | | | | | | | | | US | M232 | 3-5 |
| | | | | | | | | | | | | | | US | M232A1 | 3-5 |
| | | | | | | | | | | | | | | | | |
| US | M549 | US | M557 | US | M557 | US | MK399 | US | MK399 | US | M582 | US | M732A2 | US | M4A1 | 7 |
| FCI 155-AO-A | | US | M739 | US | M739 | | | | | US | M582A1 | US | M782 | US | M4A2 | 7 |
| | | US | M739A1 | US | M739A1 | | | | | US | M767 | | | US | M119A1 | 8 |
| | | US | M782 | US | M782 | | | | | US | M767A1 | | | US | M119A2 | 7R |
| | | US | MK399 | US | MK399 | | | | | US | M782 | | | US | M232 | 3-4 |
| | | US* | M582 | | | | | | | | | | | US | M232A1 | 3-4 |
| | | US* | M582A1 | | | | | | | | | | | | | |
| | | US* | M767 | | | | | | | | | | | | | |
| | | US* | M767A1 | | | | | | | | | | | | | |
| | | US* | M732A2 | | | | | | | | | | | | | |

US*-TI or VT fuzes in the point detonating mode

# O-4 PDFCS OPERATING CONTROLS AND INDICATORS - CONTINUED

## Table O-6. U.S Shell/Fuze Combinations Cross Reference - Continued

| Shell | | Fuze | | | | | | | | | | | | Propellants | | |
|---|---|---|---|---|---|---|---|---|---|---|---|---|---|---|---|---|
| | | Q | | D | | CP | | CPD | | TI | | VT | | | | |
| CC | Model | CC | Model | CC | Model | CC | Model | CC | Model | CC | Model | CC | Model | CC | Model | Charges |
| | | | | | | | | | | | | | | | | |
| US | M549A1 | US | M557 | US | M557 | US | MK399 | US | MK399 | US | M582 | US | M732A2 | US | M4A1 | 7 |
| FCI 155-AO-A | | US | M739 | US | M739 | | | | | US | M582A1 | US | M782 | US | M4A2 | 7 |
| | | US | M739A1 | US | M739A1 | | | | | US | M767 | | | US | M119A1 | 8 |
| | | US | M782 | US | M782 | | | | | US | M767A1 | | | US | M119A2 | 7R |
| | | US | MK399 | US | MK399 | | | | | US | M782 | | | US | M203 | 8R |
| | | US* | M582 | | | | | | | | | | | US | M203A1 | 8S |
| | | US* | M582A1 | | | | | | | | | | | US | M232 | 3-5 |
| | | US* | M767 | | | | | | | | | | | US | M232A1 | 3-5 |
| | | US* | M767 A1 | | | | | | | | | | | | | |
| | | US* | M732A2 | | | | | | | | | | | | | |
| | | | | | | | | | | | | | | | | |
| US | M485A1 | | | | | | | | | US | M565 | | | US | M3A1 | 3-5 |
| FCI 155-AM-B | | | | | | | | | | US | M577 | | | US | M4A1 | 3-7 |
| Supplement 5 | | | | | | | | | | US | M577A1 | | | US | M4A2 | 3-7 |
| | | | | | | | | | | US | M762 | | | US | M119A1 | 8 |
| | | | | | | | | | | US | M762A1 | | | US | M119A2 | 7R |
| | | | | | | | | | | | | | | US | M231 | 1-2 |
| | | | | | | | | | | | | | | US | M232 | 3-4 |
| | | | | | | | | | | | | | | US | M232A1 | 3-4 |
| | | | | | | | | | | | | | | | | |
| US | M485A2 | | | | | | | | | US | M565 | | | US | M3A1 | 3-5 |
| FCI 155-AM-B | | | | | | | | | | US | M577 | | | US | M4A1 | 3-7 |
| Supplement 5 | | | | | | | | | | US | M577A1 | | | US | M4A2 | 3-7 |
| | | | | | | | | | | US | M762 | | | US | M119A1 | 8 |
| | | | | | | | | | | US | M762A1 | | | US | M119A2 | 7R |
| | | | | | | | | | | | | | | US | M231 | 1-2 |
| | | | | | | | | | | | | | | US | M232 | 3-4 |
| | | | | | | | | | | | | | | US | M232A1 | 3-4 |
| | | | | | | | | | | | | | | | | |
| US | M898 | | | | | | | | | US | M577A1 | | | US | M3A1 | 3-5 |
| FCI 155-AR-A | | | | | | | | | | US | M762A1 | | | US | M4A1 | 3-7 |
| Supplement 7 | | | | | | | | | | | | | | US | M4A2 | 3-7 |
| | | | | | | | | | | | | | | US | M119A1 | 8 |
| | | | | | | | | | | | | | | US | M119A2 | 7R |
| | | | | | | | | | | | | | | US | M203 | 8R |
| | | | | | | | | | | | | | | US | M203A1 | 8S |
| | | | | | | | | | | | | | | US | M231 | 1-2 |
| | | | | | | | | | | | | | | US | M232 | 3-5 |
| | | | | | | | | | | | | | | US | M232A1 | 3-5 |

US*-TI or VT fuzes in the point detonating mode

# O-4 PDFCS OPERATING CONTROLS AND INDICATORS - CONTINUED

## Table O-6. U.S Shell/Fuze Combinations Cross Reference - Continued

| Shell | | Fuze | | | | | | | | | | | | Propellants | | |
|---|---|---|---|---|---|---|---|---|---|---|---|---|---|---|---|---|
| | | Q | | D | | CP | | CPD | | TI | | VT | | | | |
| CC | Model | CC | Model | CC | Model | CC | Model | CC | Model | CC | Model | CC | Model | CC | Model | Charges |
| | | | | | | | | | | | | | | | | |
| US | M110 (WP) | US | M557 | US | M557 | | | | | US | M564 | | | US | M3A1 | 3-5 |
| FCI 155-AM-B | | US | M739 | US | M739 | | | | | US | M582 | | | US | M4A1 | 3-7 |
| Supplement 1 | | US | M739A1 | US | M739A1 | | | | | US | M582A1 | | | US | M4A2 | 3-7 |
| | | US | M782 | US | M782 | | | | | US | M767 | | | US | M119A1 | 8 |
| | | US* | M582 | | | | | | | US | M767A1 | | | US | M119A2 | 7R |
| | | US* | M582A1 | | | | | | | US | M782 | | | US | M231 | 1-2 |
| | | US* | M564 | | | | | | | | | | | US | M232 | 3-4 |
| | | US* | M767 | | | | | | | | | | | US | M232A1 | 3-4 |
| | | US* | M767A1 | | | | | | | | | | | | | |
| | | | | | | | | | | | | | | | | |
| US | M110A1 (WP) | US | M557 | US | M557 | | | | | US | M564 | | | US | M3A1 | 3-5 |
| FCI 155-AM-B | | US | M739 | US | M739 | | | | | US | M582 | | | US | M4A1 | 3-7 |
| Supplement 1 | | US | M739A1 | US | M739A1 | | | | | US | M582A1 | | | US | M4A2 | 3-7 |
| | | US | M782 | US | M782 | | | | | US | M767 | | | US | M119A1 | 8 |
| | | US* | M582 | | | | | | | US | M767A1 | | | US | M119A2 | 7R |
| | | US* | M582A1 | | | | | | | US | M782 | | | US | M231 | 1-2 |
| | | US* | M564 | | | | | | | | | | | US | M232 | 3-4 |
| | | US* | M767 | | | | | | | | | | | US | M232A1 | 3-4 |
| | | US* | M767A1 | | | | | | | | | | | | | |
| | | | | | | | | | | | | | | | | |
| US | M110A2 (WP) | US | M557 | US | M557 | | | | | US | M564 | | | US | M3A1 | 3-5 |
| FCI 155-AM-B | | US | M739 | US | M739 | | | | | US | M582 | | | US | M4A1 | 3-7 |
| Supplement 1 | | US | M739A1 | US | M739A1 | | | | | US | M582A1 | | | US | M4A2 | 3-7 |
| | | US | M782 | US | M782 | | | | | US | M767 | | | US | M119A1 | 8 |
| | | US* | M582 | | | | | | | US | M767A1 | | | US | M119A2 | 7R |
| | | US* | M582A1 | | | | | | | US | M782 | | | US | M231 | 1-2 |
| | | US* | M564 | | | | | | | | | | | US | M232 | 3-4 |
| | | US* | M767 | | | | | | | | | | | US | M232A1 | 3-4 |
| | | US* | M767A1 | | | | | | | | | | | | | |
| | | | | | | | | | | | | | | | | |
| US | M116A1/HC | | | | | | | | | US | M565 | | | US | M3A1 | 3-5 |
| FCI 155-AM-B | | | | | | | | | | US | M577 | | | US | M4A1 | 3-7 |
| Supplement 2 | | | | | | | | | | US | M577A1 | | | US | M4A2 | 3-7 |
| | | | | | | | | | | US | M762 | | | US | M119A1 | 8 |
| | | | | | | | | | | US | M762A1 | | | US | M119A2 | 7R |
| | | | | | | | | | | | | | | US | M231 | 1-2 |
| | | | | | | | | | | | | | | US | M232 | 3-4 |
| | | | | | | | | | | | | | | US | M232A1 | 3-4 |
| | | | | | | | | | | | | | | | | |
| US | M825 | | | | | | | | | US | M577 | | | US | M3A1 | 3-5 |
| FCI 155-AR-A | | | | | | | | | | US | M577A1 | | | US | M4A1 | 3-7 |
| Supplement 5 | | | | | | | | | | US | M762 | | | US | M4A2 | 3-7 |
| | | | | | | | | | | US | M762A1 | | | US | M119A1 | 8 |
| | | | | | | | | | | | | | | US | M119A2 | 7R |
| | | | | | | | | | | | | | | US | M231 | 1-2 |
| | | | | | | | | | | | | | | US | M232 | 3-4 |
| | | | | | | | | | | | | | | US | M232A1 | 3-4 |

US*-TI or VT fuzes in the point detonating mode

# O-4 PDFCS OPERATING CONTROLS AND INDICATORS - CONTINUED

## Table O-6. U.S Shell/Fuze Combinations Cross Reference - Continued

| Shell | | Fuze | | | | | | | | | | | | Propellants | | |
|---|---|---|---|---|---|---|---|---|---|---|---|---|---|---|---|---|
| | | Q | | D | | CP | | CPD | | TI | | VT | | | | |
| CC | Model | CC | Model | CC | Model | CC | Model | CC | Model | CC | Model | CC | Model | CC | Model | Charges |
| [redacted] | | | | | | | | | | | | | | | | |
| US | M825A1 | | | | | | | | | US | M577 | | | US | M3A1 | 3-5 |
| FCI 155-AR-A | | | | | | | | | | US | M577A1 | | | US | M4A1 | 3-7 |
| Supplement 5 | | | | | | | | | | US | M762 | | | US | M4A2 | 3-7 |
| | | | | | | | | | | US | M762A1 | | | US | M119A1 | 8 |
| | | | | | | | | | | | | | | US | M119A2 | 7R |
| | | | | | | | | | | | | | | US | M203 | 8R |
| | | | | | | | | | | | | | | US | M203A1 | 8S |
| | | | | | | | | | | | | | | US | M231 | 1-2 |
| | | | | | | | | | | | | | | US | M232 | 3-5 |
| | | | | | | | | | | | | | | US | M232A1 | 3-5 |
| [redacted] | | | | | | | | | | | | | | | | |
| US | DM702 | | | | | | | | | US | M762A1 | | | US | M232 | 3-5 |
| FCI 155-AR-A | | | | | | | | | | | | | | US | M232A1 | 3-5 |
| Supplement 9 | | | | | | | | | | | | | | | | |
| [redacted] | | | | | | | | | | | | | | | | |
| US | DM702A1 | | | | | | | | | US | M762A1 | | | US | M232 | 3-5 |
| FCI 155-AR-A | | | | | | | | | | | | | | US | M232A1 | 3-5 |
| Supplement 9 | | | | | | | | | | | | | | | | |
| [redacted] | | | | | | | | | | | | | | | | |
| US | 155BONUS | | | | | | | | | US | M577 | | | US | M232 | 3-5 |
| FCI 155-AU-A | | | | | | | | | | US | M577A1 | | | US | M232A1 | 3-5 |
| Supplement 2 | | | | | | | | | | US | M762 | | | | | |
| | | | | | | | | | | US | M762A1 | | | | | |
| [redacted] | | | | | | | | | | | | | | | | |
| US | O155ACF1BO-NUS | | | | | | | | | US | M577 | | | US | M232 | 3-5 |
| FCI 155-AU-A | | | | | | | | | | US | M577A1 | | | US | M232A1 | 3-5 |
| Supplement 2 | | | | | | | | | | US | M762 | | | | | |
| | | | | | | | | | | US | M762A1 | | | | | |
| [redacted] | | | | | | | | | | | | | | | | |
| US | XM982 | | | | | | | | | | | | | US | M232 | 3-4 |
| FCI 155-BB-PAD | | | | | | | | | | | | | | US | M232A1 | 3-4 |

## O-4 PDFCS OPERATING CONTROLS AND INDICATORS - CONTINUED

Function Key Labels- This block is used to identify the function of the four softkeys.

softkey messages and task actions are also displayed in this area to give the PDFCS operator a means of keeping track of various PDFCS related actions during Fire Control operation. Typical messages are shown below:

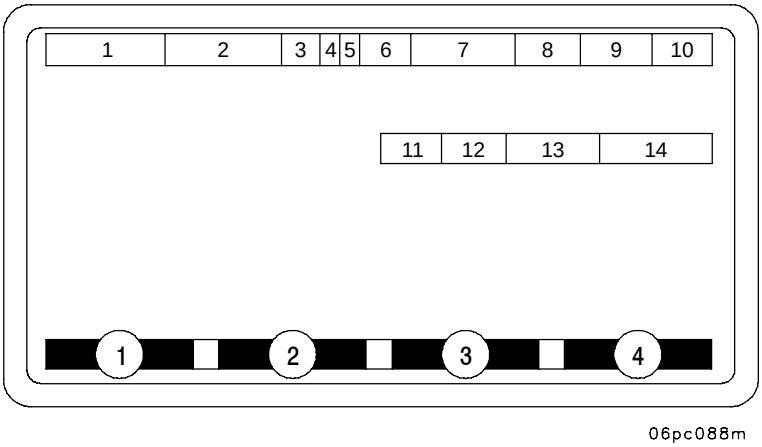


(1) Function Key 1, indicates what may appear in this field.
SELECT
NEXT MSG
+/-
MARK
ADJ
PREV
MENU
VERIFY
PREV

(2) Function Key 2, indicates what may appear in this field.
USE ALL
FINISHED
NEXT PAGE
+/-
FINISHED
USE LOCAL
FFE1
INVENTORY
ARRIVED
UPDATE EFC
CLEAR

(3) Function Key 3, indicates what may appear in this field.
CHECK
DELETE
YES
USE GPS
EMPLACE
STEERTO
FFE2
SEND
CLEAR
EXPECTED

(4) Function Key 4, indicates what may appear in this field.
CANCEL
ACK
EOM
NO
CONTINUE
MOVING
EXIT
ABORT

## O-4 PDFCS OPERATING CONTROLS AND INDICATORS - CONTINUED

**Table O-7. Urgent Messages**

| Audio Alert | Operator Alert/Message | Cause | Removal Conditions | Operator Notes |
|---|---|---|---|---|
| Type 2 | "PALADIN CHECK-FIRED" "ACK" | The Paladin received a "Check Fire All" or "Check Fire By Target Number". | Operator presses "ACK" | If the Paladin received a "CHECK FIRE ALL", all fire missions will be stopped until a "CANCEL CHECK FIRE ALL" message is received from the FDC.<br>If the Paladin received a "CHECK FIRE TARGET", the fire mission with the matching target number will be stopped until a "CANCEL CHECK FIRE TARGET" message is received with a matching target ID is received from the FDC. |

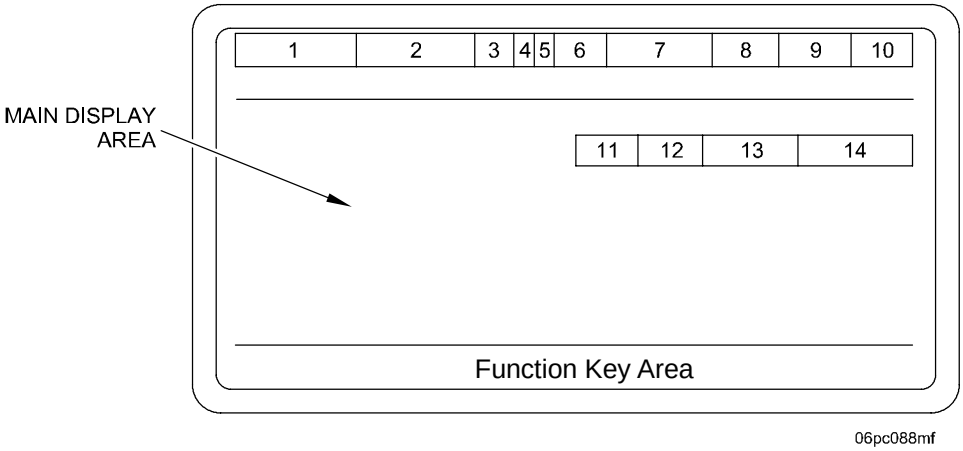

## O-4 PDFCS OPERATING CONTROLS AND INDICATORS - CONTINUED

**Table O-8. High Priority Messages**

| Audio Alert | Operator Alert/Message | Cause | Removal Conditions | Operator Notes |
|---|---|---|---|---|
| Type 1 | “FIRE” | The Paladin received a “Fire” command (At My Command) or is in a Time On Target Mission, and the TOT countdown timer reaches 0. | “SHOT” is detected (softkey, DRUH, or MVS), operator aborts, Checkfire by Target Number, Check-fire All, or End Of Mission is received. | Fire the mission. |
| Type 2 | “AUX BATTERY NOT CONNECTED” “ACK” | AUX battery isn’t connected or a PCU failure has occurred. | Operator presses “ACK” | On PCU, check AUX Battery connections and circuit breakers. |
| Type 2 | “AUX POWER LOW” “ACK” | The PCU reports vehicle power voltage is getting low and the AUX battery can’t support operation. | Operator presses “ACK” | Start vehicle to charge batteries. |
| Type 2 | “FIRE MISSION RCVD” “ACCEPT” “REJECT” | A Fire Mission was received while PDFCS was in Maintenance mode. | Operator presses “ACCEPT” or “REJECT” | Acceptance of the Fire Mission terminates all maintenance functions and continues the Fire Mission. Rejection of the Fire Mission forces a tube clear, aborts the Fire Mission, and continues maintenance functions. |
| Type 2 | “FIRE MISSION RECEIVED” “ACK” | A new Fire Mission (not operator initiated) or a continuation of an active mission was received. | Operator presses “ACK” | PDFCS transitions to the Fire Mission screen and continues Fire Mission Processing. |
| Type 2 | “FUZE EXPIRED CALL FDC” “ACK” | The Inductive Fuze timer has expired (reached 0). | Operator presses “ACK” | Contact the FDC for instructions. |
| Type 2 | “FUZE EXPIRES IN 1 MIN CALL FDC” “ACK” | The Inductive Fuze timer has reached 60 seconds (1 min) remaining. | Operator presses “ACK” | Contact the FDC for instructions. |
| Type 2 | “IFS OUT” “ACK” | The Inductive Fuze Setter is not operational. | Operator presses “ACK” | Correct the failure condition before Paladin will be capable of firing Inductive Fuze missions. Review the IFS STATUS display for additional information. |

## O-4 PDFCS OPERATING CONTROLS AND INDICATORS - CONTINUED

**Table O-8. High Priority Messages - Continued**

| Audio Alert | Operator Alert/Message | Cause | Removal Conditions | Operator Notes |
|---|---|---|---|---|
| Type 2 | “MOVE MISSION RECEIVED” “ACK” | A move mission was received from the FDC. | Operator presses “ACK” | PDFCS transitions to the Move Order screen and continues move mission processing. |
| Type 2 | “MOVE ORDER RECEIVED” “ACK” | A Move Order was received. | Operator presses “ACK” | Start the Move Order. |
| Type 2 | “NAV CONFLICT-UPDATE NAV” “ACK” | An unexplained and unreasonable change in DRUH position was detected. | Operator presses “ACK” | Perform a NAV Update. |
| Type 2 | “NAV EXCESSIVE RATE RESTART REQ” “ACK” | Excessive vehicle motion caused the DRUH to lose accuracy. | Operator presses “ACK” | Perform a NAV Restart. |
| Type 2 | “NAV OUT, DRU BIT FAIL” “ACK” | The DRUH reports a BIT failure. | Operator presses “ACK” | Cycle PDFCS power. If the fault does not clear, notify unit maintenance. |
| Type 2 | “NAV OUT, DRU DISCONNECT” “ACK” | The PDCU has lost communications with the DRUH. | Operator presses “ACK” | If DRUH does not “hum”, check power cable connections and PCU circuit breakers. Perform a System Restart when power is restored. If DRUH “hums”, check W-17A connections and perform a NAV Restart. If problem persists, notify unit maintenance. |
| Type 2 | “NAV OUT, DRU INERTIAL FAIL” “ACK” | DRUH BIT reported Inertial Fail. | Operator presses “ACK” | Cycle PDFCS power. If the problem persists, notify unit maintenance. |
| Type 2 | “NAV OUT, DRU OP FAIL” “ACK” | PDCU detected abnormal DRUH data. | Operator presses “ACK” | NOTE: During the first 90 seconds of a NAV Restart, performing a VMS test may trigger a DRU OP FAIL.<br><br>Perform a System Restart. |
| Type 2 | “NAV OUT, NSP DISCONNECT” “ACK” | Displayed when the Critical Error signal is generated within the software. | Operator presses “ACK” | Check NAV connections and perform a NAV Restart. |
| Type 2 | “NAV OUT, NSP POWER UP BIT” “ACK” | The PDCU NAV subsystem interface has failed or has not initialized correctly. | Operator presses “ACK” | Perform a System Restart. If failure repeats, notify unit maintenance. |

## O-4 PDFCS OPERATING CONTROLS AND INDICATORS - CONTINUED

**Table O-8. High Priority Messages - Continued**

| Audio Alert | Operator Alert/Message | Cause | Removal Conditions | Operator Notes |
|---|---|---|---|---|
| Type 2 | "NOT PGM CAPABLE-GPS" "ACK" | GPS data is inadequate to set/ initialize GPS guided munitions. | Operator presses "ACK" | Check the GPS/DAGR connections and correct as required. The howitzer may need to be moved in order to receive signals from additional satellites. Check the IFS STATUS display for additional information. |
| Type 2 | "NOT PGM CAPABLE-MAINTENANCE" "ACK" | An IFS hardware failure renders Paladin incapable of firing GPS guided munitions. | Operator presses "ACK" | Check IFS cables and connections to correct this condition before GPS guided munitions can be fired. Check the IFS STATUS display for additional information. |
| Type 2 | "ON AUX POWER START VEHICLE" "ACK" | PCU reports operating on AUX battery because vehicle voltage is too low. | Operator presses "ACK" | Start vehicle engine to charge batteries. |
| Type 2 | "OVERRIDE AZ LIMITS" "YES" "NO" | The tube has exceeded traverse limits when it's position is +/-45 degrees (+/-3 degrees) from the defined stow azimuth. | Operator selects "YES" or "NO" | If YES is selected, the Lay key will continue to function while holding the OVERRIDE switch. The override will be in effect until the tube is within traverse limits. If NO is selected, the Lay key will no longer function. If NO is selected in error, the howitzer will have to be layed with either the hand wheels or the power control handles. |
| Type 2 | "POWER FAILURE SHUTDOWN" | PCU reports vehicle and AUX battery voltages are too low to sustain operation. | No operator action required. | The PDFCS will shut down automatically. |
| Type 2 | "VEHICLE AND AUX POWER OK" "ACK" | PCU reports both vehicle and back up battery are ok after a problem has been corrected. | Operator presses "ACK" | No further action is required. |
| Type 2 | "ZEROIZE IFS/GPS COMPLETE" "ACK" | The IFS/GPS was zeroized successfully. | Operator presses "ACK" | No further action required. |
| Type 2 | "ZEROIZE IFS/GPS FAILED" "ACK" | The IFS/GPS failed a zeroize attempt. | Operator presses "ACK" | Check the IFS/GPS cable connections and retry. |

## O-4 PDFCS OPERATING CONTROLS AND INDICATORS - CONTINUED

**Table O-9. Low Priority Messages with Audio Alerts**

| Audio Alert | Operator Alert/Message | Cause | Removal Conditions | Operator Notes |
|---|---|---|---|---|
| Type 2 | “BORESIGHT UPDT RJTD VEH MOVING” “ACK” | Motion detected during DRUH boresight angle entry. | Operator presses “ACK” | Ensure Paladin is stationary and re-enter boresight angles. |
| Type 2 | “CC MISMATCH” “ACK“ | Country Codes (CC) for the selected shells and propellants do not match. | Operator presses “ACK” | Resolve the country code mismatch between the projectile and propellant. |
| Type 2 | “CHK DATA BASE BAD DATA DETECTED” “ACK” | The value of one or more NVM data elements was found to be out of range during initialization. | Operator presses “ACK” | The PDFCS discards NVM data and initializes the database to default values. The operator must manually enter all NVM data (i.e. ammo, location, prop temp, etc.). |
| Type 2 | “CLOCK UPDATE RJTD FM ACTIVE” “ACK’ | A Date/Time Update was attempted while a Fire Mission was active. | Operator presses “ACK” | Complete or abort the Fire Mission before changing Date/Time settings. |
| Type 2 | “COMMO OUT” “ACK” | A known operational CP has failed. | Operator presses “ACK” | Cycle PDFCS power. |
| Type 2 | “DEPARTED FIRE AREA RADIUS” “ACK” | The Paladin leaves the Fire Area without a current move order. | Operator presses “ACK” | No further action required. |
| Type 2 | “DIRECT FIRE RJTD TGT COMP ERR” “ACK” | A value greater than (-) 400 is entered in the Up/Down selection of the Direct Fire Display. | Operator presses “ACK” | Verify target information and re-enter as needed. |
| Type 2 | “DRU CONNECTED” “ACK” | The PDCU has re-established communication with the DRUH. | Operator presses “ACK” | No further action required. |
| Type 2 | “DRU NO LONGER OVERTEMP” “ACK” | The DRUH is no longer in an Overtemp state. | Operator presses “ACK” | If in an active Fire Mission, this message will be pended until EOM. |
| Type 2 | “DRU OVERTEMP” “ACK” | The DRUH is too hot and may turn off to protect itself. | Operator presses “ACK” | If in an active Fire Mission, this message will be pended until EOM. |

## O-4 PDFCS OPERATING CONTROLS AND INDICATORS - CONTINUED

**Table O-9. Low Priority Messages with Audio Alerts - Continued**

| Audio Alert | Operator Alert/Message | Cause | Removal Conditions | Operator Notes |
|---|---|---|---|---|
| Type 2 | "DTG OUT OF SYNC-URN NNNNNNNN" "ACK" | A subscriber within the subscriber table has a DTG that is not in sync with the Paladin. | Operator presses "ACK" | Note: NNNNNNNN represents the URN of the subscriber that is out of sync with the Paladin.<br><br>The operator must verify the current DTG. |
| Type 2 | "ENTERED FIRE AREA RADIUS" "ACK" | The Paladin is in a current move order and enters the Fire Area. | Operator presses "ACK" | Select a suitable fire position, orient Paladin on the azimuth of fire, and conduct arrival processing. |
| Type 2 | "FBCB2 ALARM" "ACK" | The FBCB2 sends the Paladin the triggering alarm. | Operator presses "ACK" | No further action required. |
| Type 2 | "FBCB2 EVENT" "ACK" | The FBCB2 sends the Paladin the triggering event. | Operator presses "ACK" | No further action required. |
| Type 2 | "FIRE CONTROL ALIGN REQUIRED" "ACK" | Boresight angles have not been stored or those stored in PDCU and DRUH differ. | Operator presses "ACK" | Perform Fire Control Align. |
| Type 2 | "FIRE CONTROL INFO RCVD" "ACK" | The operator has entered boresight angles into the PDFCS. | Operator presses "ACK" | No further action required. |
| Type 2 | "FIRE MISSION RJTD FM ACTIVE" "ACK" | A Direct Fire mission was attempted while in an active Fire Mission. | Operator presses "ACK" | Wait until Fire Mission is ended before attempting a Direct Fire mission. |
| Type 2 | "FIRE MISSION RJTD IN CHECKFIRE" "ACK" | A Direct Fire mission was attempted while in Checkfire Target or Checkfire All. | Operator presses "ACK" | Wait until Cancel Checkfire Target or Cancel Checkfire All is received before attempting a Direct Fire mission. |
| Type 2 | "FIRE MISSION RJTD NAV NOT INIT" "ACK" | A Direct Fire mission was attempted before the "OK TO MOVE OR SHOOT" message was displayed. | Operator presses "ACK" | Verify the NAV subsystem has been initialized with a NAV Update or Restart and wait for the "OK TO MOVE OR SHOOT" message before initiating a Direct Fire mission. |

## O-4 PDFCS OPERATING CONTROLS AND INDICATORS - CONTINUED

**Table O-9. Low Priority Messages with Audio Alerts - Continued**

| Audio Alert | Operator Alert/Message | Cause | Removal Conditions | Operator Notes |
|---|---|---|---|---|
| Type 2 | "FIRE MISSION RJTD TGT COMP ERR" "ACK" | Calculated target altitude is below 400 meters based on entries in the Direct Fire Display | Operator presses "ACK" | Verify target information and re-enter as needed. |
| Type 2 | "GPS ANTENNA FAULT" "ACK" | A GPS Antenna Fault was detected. | Operator presses "ACK" | Check cable connections between GPS receiver and antenna. If in an active Fire Mission, this message will be pended until EOM. |
| Type 2 | "GPS ANTENNA OK" "ACK" | A GPS Antenna Fault was corrected. | Operator presses "ACK" | If in an active Fire Mission, this message will be pended until EOM. |
| Type 2 | "GPS CONNECTED" "ACK" | The DRUH re-established communications with the GPS receiver. | Operator presses "ACK" | If in an active Fire Mission, this message will be pended until EOM. |
| Type 2 | "GPS OPERATIONAL" "ACK" | A GPS failure was corrected. | Operator presses "ACK" | If in an active Fire Mission, this message will be pended until EOM. |
| Type 2 | "GPS OUT-DISCONNECTED" "ACK" | The DRUH lost communications with the GPS receiver. | Operator presses "ACK" | Check power and signal cable connections to the GPS receiver and verify the receiver is turned on. If in an active Fire Mission, this message will be pended until EOM. |
| Type 2 | "GPS OUT-FAILED" "ACK" | The GPS receiver reported a BIT failure. | Operator presses "ACK" | Disconnect data cable from GPS receiver and run GPS receiver self-test. If in an active Fire Mission, this message will be pended until EOM. |
| Type 2 | "GPS UNKEYED" "ACK" | The GPS receiver doesn't have a valid crypto key loaded. | Operator presses "ACK" | Have a valid crypto key loaded into the GPS receiver. If in an active Fire Mission, this message will be pended until EOM. |
| Type 2 | "GUN SWITCH FAULT" "ACK" | Hardware BIT detected a GUN (servo) switch fault. | Operator presses "ACK" | Check to see if the GUN SWITCH is in the up (on) position. If YES, place the GUN SWITCH in the down (off) position and perform a System Restart. If the GUN SWITCH is in the down (off) position, notify unit maintenance. |
| Type 2 | "INP/GPS ALT EXCESSIVE" "ACK" | Altitude in a NAV Update or Restart deviates too much from the current GPS altitude. | Operator presses "ACK" | Verify current location, re-enter, and perform NAV Update or Restart. A second update may be accepted if the entered values remain the same. |

## O-4 PDFCS OPERATING CONTROLS AND INDICATORS - CONTINUED

**Table O-9. Low Priority Messages with Audio Alerts - Continued**

| Audio Alert | Operator Alert/Message | Cause | Removal Conditions | Operator Notes |
|---|---|---|---|---|
| Type 2 | “INP/GPS ALT REJECTED” “ACK” | Altitude in a NAV Update or Restart deviates too much from the current GPS altitude. | Operator presses “ACK” | Verify current location, re-enter, and perform NAV Update or Restart. A second update will be rejected if the entered values remain the same. |
| Type 2 | “INP/GPS DELTA TOO LARGE” “ACK” | The DRUH returned an incorrect response to a NAV Update or Restart. | Operator presses “ACK” | Cycle PDFCS power. |
| Type 2 | “INP/GPS N/E EXCESSIVE” “ACK” | Horizontal position in a NAV Update or Restart deviates too much from the current GPS position. | Operator presses “ACK” | Verify current location, re-enter, and perform NAV Update or Restart. A second update may be accepted if the entered values remain the same. |
| Type 2 | “INP/GPS N/E REJECTED” “ACK” | Horizontal position in a NAV Update or Restart deviates too much from the current GPS position. | Operator presses “ACK” | Verify current location, re-enter, and perform NAV Update or Restart. A second update will be rejected if the entered values remain the same. |
| Type 2 | “INP/NAV ALT EXCESSIVE” “ACK” | Entered altitude value exceeds the current DRUH acceptance criteria. | Operator presses “ACK” | Verify current location and perform NAV Update. |
| Type 2 | “INP/NAV ALT REJECTED” “ACK” | Entered altitude value exceeds the current DRUH acceptance criteria. | Operator presses “ACK” | Verify current location and perform NAV Update. The DRUH will reject the second update if the values remain the same. |
| Type 2 | “INP/NAV N/E EXCESSIVE” “ACK” | Entered northing and easting values are outside the current DRUH acceptance criteria. | Operator presses “ACK” | Verify current location and perform NAV Update. If the values remain the same, the DRUH will accept the update the second time. |
| Type 2 | “INP/NAV N/E REJECTED” “ACK” | Entered northing and easting values are outside the current DRUH acceptance criteria. | Operator presses “ACK” | Verify current location and perform NAV Update. If the values remain the same, the DRUH will reject the second update. |

## O-4 PDFCS OPERATING CONTROLS AND INDICATORS - CONTINUED

**Table O-9. Low Priority Messages with Audio Alerts - Continued**

| Audio Alert | Operator Alert/Message | Cause | Removal Conditions | Operator Notes |
|---|---|---|---|---|
| Type 2 | "INVALID OPERATIONAL MODE" "ACK" | Selection of an invalid operational mode (Normal Operations, Maintenance, Training) was attempted. | Operator presses "ACK" | No further action required. |
| Type 2 | "INVALID SOFTWARE CONFIGURATION" "ACK" | The software configuration is not valid. | Operator presses "ACK" | The PDFCS will continue to the Normal Operations mode selection screen. |
| Type 2 | "MANUAL COMMANDS RJTD CHECKFIRE" "ACK" | A Manual Commands Fire Mission was received while in CHECKFIRE. | Operator presses "ACK" | NOTE: This warning will be displayed only if the CHECKFIRE originated from the Paladin.<br><br>No further action required. |
| Type 2 | "MANUAL COMMANDS RJTD FM ACTIVE" "ACK" | A Manual Commands Fire mission was received while in an active Fire Mission. | Operator presses "ACK" | No further action required. |
| Type 2 | "MINIMUM QE NO LONGER VIOLATED" "ACK" | The tube returned above Min QE after the "Minimum QE Violated" warning was displayed. | Operator presses "ACK" | No further action required. |
| Type 2 | "MINIMUM QE VIOLATED" "ACK" | While in an active Fire Mission and Load or Lay command forces tube below Min QE and volley is not Direct Fire. | Operator presses "ACK" | Determine if mission is safe to shoot and accept or abort as needed. |
| Type 2 | "MVS OUT or MVS BUS OUT" "ACK" | If the MVS was operational and either the data in the status message indicates a failure or the PDFCS and MVS are no longer communicating, this alert will be displayed to the operator. | Operator presses "ACK" | The Paladin will no longer record MVV data. All MVVs will have to be received from FDC to be applied to Paladin computed Fire Missions. |

## O-4 PDFCS OPERATING CONTROLS AND INDICATORS - CONTINUED

**Table O-9. Low Priority Messages with Audio Alerts - Continued**

| Audio Alert | Operator Alert/Message | Cause | Removal Conditions | Operator Notes |
|---|---|---|---|---|
| Type 2 | “MVV DATABASE FULL, “ “ACK” | The MVV database is full and the next MVV measured will be lost. | Operator presses “ACK” | If the operator takes no action to eliminate the saturation condition, velocity data from the MVS will be discarded until the condition is eliminated. Operator must delete MVV entries. |
| Type 2 | “MVV DB ALMOST FULL” “ACK” | The MVV database is 95% full. | Operator presses “ACK” | If the operator takes no action to eliminate the saturation condition, velocity data from the MVS will be discarded until the condition is eliminated. Operator must delete MVV entries. |
| Type 2 | “MVV DB FULL-DATA LOST” “ACK” | A MVV was recorded but could not be stored in database and was lost. | Operator presses “ACK” | If the operator takes no action to eliminate the saturation condition, velocity data from the MVS will be discarded until the condition is eliminated. Operator must delete MVV entries. |
| Type 2 | “NAV POS UPDATE NO LONGER REQ” “ACK” | The DRUH accepted a NAV Update or valid GPS aiding data. | Operator presses “ACK” | No further action required. |
| Type 2 | “NAV POS UPDATE REQUESTED” “ACK” | The DRUH requests a Position Update to restore accuracy. | Operator presses “ACK” | Perform a NAV Update. |
| Type 2 | “NAV RESTART RJTD FM ACTIVE” “ACK” | A NAV Restart is pending and a fire mission is activated before the restart is executed. | Operator presses “ACK” | Complete or abort the Fire Mission and perform a NAV Restart. |
| Type 2 | “NAV RESTART RJTD NAV OUT” “ACK” | NAV subsystem fails before a pending NAV Restart is executed. | Operator presses “ACK” | Cycle PDFCS power. |
| Type 2 | “NAV RESTART RJTD VEH MOVING” “ACK” | Motion detected while DRUH was processing a NAV Restart. | Operator presses “ACK” | Ensure vehicle is stationary and perform NAV Restart. |

## O-4 PDFCS OPERATING CONTROLS AND INDICATORS - CONTINUED

**Table O-9. Low Priority Messages with Audio Alerts - Continued**

| Audio Alert | Operator Alert/Message | Cause | Removal Conditions | Operator Notes |
|---|---|---|---|---|
| Type 2 | "NET BUSY XXXXXX" "RETRY" "NO RETRY" | This message will be displayed for *ANY* Paladin transmitted message (i.e. AMMO, REQ AMMO, CHECKFIRE, FREE TEXT, VEH STS, REQ VEH STS, REQ INIT, SITE DATA, REQ SITE, REQ MOV ORD, MTO TOF, MTO DENY, MVV, REQ MVV, READY, ROUND COMP, SHOT, SPLASH, TARGET FILE, GEOMETRIES, RECORD OF FIRE, QUERY, POSITION REPORT and UTE BAT) if Net Busy (more than 55 messages in progress) is detected. | Operator selects "RETRY" or "NO RETRY" | If "RETRY" is selected, the PDFCS will attempt to retransmit the message. If "NO RETRY" is selected, the attempt to retransmit will be aborted. |
| Type 2 | "NET CONFG UPDTE RJTD FM ACTIVE" "ACK" | A Network Configuration Update is pending and a fire mission is received before the network access parameters have been processed. | Operator presses "ACK" | Complete or abort the Fire Mission before changing Network settings. |
| Type 2 | "NETWORK COMMO OUT" "ACK" | A previously operational Radio Network Controller has failed. | Operator presses "ACK" | Perform a System Restart. |

## O-4 PDFCS OPERATING CONTROLS AND INDICATORS - CONTINUED

**Table O-9. Low Priority Messages with Audio Alerts - Continued**

| Audio Alert | Operator Alert/Message | Cause | Removal Conditions | Operator Notes |
|---|---|---|---|---|
| Type 2 | "NO ACK XXXXXX" "RETRY" NO RETRY" | An ACK for a message Paladin transmitted to a subscriber was not received (i.e. AMMO, REQ AMMO, CHECKFIRE, FREE TEXT, VEH STS, REQ VEH STS, REQ INIT, SITE DATA, REQ SITE, REQ MOV ORD, MTO TOF, MTO DENY, MVV, REQ MVV, READY, ROUND COMP, SHOT, SPLASH, TARGET FILE, GEOMETRIES, RECORD OF FIRE, QUERY, POSITION RE-PORT and UTE BAT). | Operator selects "RETRY" or "NO RETRY" | If "RETRY" is selected, the PDFCS will retransmit the message. If "NO RETRY" is selected, the attempt to transmit will be aborted. |
| Type 2 | "NO BALLISTIC SOLUTION" "ACK" | The operator has entered fire mission data (i.e. target location, target altitude and shell/fuze combination) and the PDFCS has failed to determine a ballistic solution. | Operator presses "ACK" | Once "ACK" is pressed, the operator will be allowed to edit all fields on PALADIN FIRE COMMANDS ENTRY display. Verify fire mission data and re-enter as needed. |
| Type 2 | "NO LEGAL AMMO INV COMBINATION" "ACK" | There is no legal Shell/Fuze combination in inventory, based on the generic Shell/Fuze combination selected by the operator, for a Paladin Computed Fire Commands fire mission. | Operator presses "ACK" | Edit the PALADIN FIRE COMMANDS ENTRY display. |

## O-4 PDFCS OPERATING CONTROLS AND INDICATORS - CONTINUED

**Table O-9. Low Priority Messages with Audio Alerts - Continued**

| Audio Alert | Operator Alert/Message | Cause | Removal Conditions | Operator Notes |
|---|---|---|---|---|
| Type 2 | “OK TO MOVE OR SHOOT” “ACK” | The Initial howitzer location has been established and the NAV subsystem is aligned in survey. | Operator presses “ACK” | No further action required. |
| Type 2 | “PALADIN COMMO OUT MIT RJTD” “ACK” | A CP failure prevents transmission of a message to the FDC. | Operator presses “ACK” | Perform a System Restart and re-try transmitting the message. |
| Type 2 | “PDI WARNING RECEIVED” “ACK” | A PDI high priority warning has been received. | Operator presses “ACK” | The PDFCS will display “W” in inverse video on top line of the screen, to prompt the operator to check warning messages. |
| Type 2 | “PDI OUT OR PDI BUS OUT” “ACK” | PDI was operational and then a PDI failure is detected. | Operator presses “ACK” | Perform System Restart to attempt to restore PDI. |
| Type 2 | “POS UPDATE INTERRUPTED” “ACK” | DRUH detected motion when a NAV Update or Restart was in progress. | Operator presses “ACK” | Ensure vehicle is stationary, verify current location, and perform NAV Update or Restart. |
| Type 2 | “POS UPDATE RJTD FM ACTIVE” “ACK” | A fire mission is activated before a pending NAV Update or Restart has executed. | Operator presses “ACK” | ABORT or complete fire mission and perform NAV Update or Restart. |
| Type 2 | “POS UPDATE RJTD HOWITZER MOVG” “ACK” | DRUH detected vehicle motion during a NAV Update. | Operator presses “ACK” | Ensure vehicle is stationary and perform NAV Update or Restart. |
| Type 2 | “POS UPDATE RJTD NAV OUT” “ACK” | NAV subsystem fails before a NAV Update can be processed. | Operator presses “ACK” | Cycle PDFCS power. |
| Type 2 | “POSITION UPDATE BEYOND ZONE” “ACK” | Position in a NAV Update or Restart is outside the (extended) UTM zone boundaries. | Operator presses “ACK” | Verify current location, re-enter, and perform NAV Update or Restart. |
| Type 2 | “POSITION UPDATE REQUIRED” “ACK” | DRUH requests a NAV Update to restore accuracy. | Operator presses “ACK” | Verify current location and perform a NAV Update. |

## O-4 PDFCS OPERATING CONTROLS AND INDICATORS - CONTINUED

**Table O-9. Low Priority Messages with Audio Alerts - Continued**

| Audio Alert | Operator Alert/Message | Cause | Removal Conditions | Operator Notes |
|---|---|---|---|---|
| Type 2 | “PRESS ACK WHEN TUBE STOWED” “ACK” | The Paladin has moved since arrival processing was performed. | Operator presses “ACK” | Verify gun tube is stowed before pressing “ACK”. Pressing “ACK” notifies the DRUH that it can use VMS aiding to extend time between ZUPT stops. |
| Type 2 | “PRESS LOAD THEN READY” “ACK” | Displayed when a fire mission is an XM982 or M982 and the Method of Control is DNL. | Operator presses “ACK” | Ensure the XM982 or M982 projectile is on the loading tray, at the correct load elevation, and unrammed. Then press the “READY” softkey. |
| Type 2 | “PROP TEMP UPDATE PENDED” “ACK” | Prop Temp was updated while a Fire Mission was active. | Operator presses “ACK” | The PROP TEMP UPDATE message will be pended until EOM is received. |
| Type 2 | “PROP TEMP UPDATE REQUIRED” “ACK” | The Prop Temp Update time has expired since last entered. | Operator presses “ACK” | If in an active Fire Mission, the “PROP TEMP UPDATE REQUIRED” message will be pended until EOM. |
| Type 2 | “RANGE TOO FAR” “ACK” | The Target Location entered during an Operator Initiated Fire Mission cannot be reached with Ammo currently in inventory. | Operator presses “ACK” | Once “ACK” is pressed, the operator shall be allowed to edit all fields on PALADIN FIRE COMMANDS ENTRY display. Verify the coordinates and re-enter, otherwise, this mission is not supportable from the current location. |
| Type 2 | “RESET FUZE” “ACK” | A corrupt or unreadable fuze set message from PIK during a Fire Mission with GPS fuze. | Operator presses “ACK” | Reset fuze. |
| Type 2 | “RESTART REQUIRED” “ACK” | A PDFCS software fault was detected. | Operator presses “ACK” | Perform a System Restart. |
| Type 2 | “RESTART RJTD BAD POS” “ACK” | This message is displayed if the NAV system components do not agree upon the current howitzer location. | Operator presses “ACK” | Verify current position. |
| Type 2 | “SIMULATED COMMO FAILURE” “ACK” | While in Embedded Training Level 4, a simulated commo failure occurs. | Operator presses “ACK” | Press the “ACK” softkey to continue. Pressing the “Secret” non-illuminated softkeys 2 or 3 on PDFCS STATUS display will clear all simulated failures. |

## O-4 PDFCS OPERATING CONTROLS AND INDICATORS - CONTINUED

**Table O-9. Low Priority Messages with Audio Alerts - Continued**

| Audio Alert | Operator Alert/Message | Cause | Removal Conditions | Operator Notes |
|---|---|---|---|---|
| Type 2 | “SIMULATED COMMO FAILURE” “CLEAR” | While in Embedded Training Level 3, a simulated commo failure occurs. | Operator selects “CLEAR” | Press the “CLEAR” softkey to continue. This will clear all simulated failures. |
| Type 2 | “SIMULATED ELECTRICAL FAILURE” “ACK” | While in Embedded Training Level 4, a simulated electrical failure occurs. | Operator presses “ACK” | Press the “ACK” softkey to continue. Pressing the “Secret” non-illuminated softkeys 2 or 3 on PDFCS STATUS display will clear all simulated failures. |
| Type 2 | “SIMULATED ELECTRICAL FAILURE” “CLEAR” | While in Embedded Training Mode Level 3, a simulated electrical failure occurs. | Operator selects “CLEAR” | Press the “CLEAR” softkey to continue. This will clear all simulated failures. |
| Type 2 | “SIMULATED FAILURES CLEARED” “ACK” | While in Embedded Training Level 4, operator cleared simulated failures. | Operator presses “ACK” | Press softkey 2 or 3 to clear simulated failures and display this alert. |
| Type 2 | “SIMULATED HYDRAULIC FAILURE” “ACK” | While in Embedded Training Level 4, a simulated hydraulic failure occurs. | Operator presses “ACK” | Press the “ACK” softkey to continue. Pressing the “Secret” non-illuminated softkeys 2 or 3 on PDFCS STATUS display will clear all simulated failures. |
| Type 2 | “SIMULATED HYDRAULIC FAILURE” “CLEAR” | While in Embedded Training Level 3, a simulated hydraulic failure occurs. | Operator selects “CLEAR” | Press the “CLEAR” softkey to continue. This will clear all simulated failures. |
| Type 2 | “SIMULATED NAV FAILURE” “ACK” | While in Embedded Training Level 4, a simulated NAV failure occurs. | Operator presses “ACK” | Press the “ACK” softkey to continue. Pressing the “Secret” non-illuminated softkeys 2 or 3 on PDFCS STATUS display will clear all simulated failures. |
| Type 2 | “SIMULATED NAV FAILURE” “CLEAR” | While in Embedded Training Mode Level 3, a simulated NAV failure occurs. | Operator selects “CLEAR” | Press the “CLEAR” softkey to continue. This will clear all simulated failures. |
| Type 2 | “SIMULATED WPN FAILURE” “ACK” | While in Embedded Training Level 4, a simulated weapon failure occurs. | Operator presses “ACK” | Press the “ACK” softkey to continue. Pressing the “Secret” non-illuminated softkeys 2 or 3 on PDFCS STATUS display will clear all simulated failures. |
| Type 2 | “SIMULATED WPN FAILURE” “CLEAR” | While in Embedded Training Level 3, a simulated weapon failure occurs. | Operator selects “CLEAR” | Press the “CLEAR” softkey to continue. This will clear all simulated failures. |

## O-4 PDFCS OPERATING CONTROLS AND INDICATORS - CONTINUED

**Table O-9. Low Priority Messages with Audio Alerts - Continued**

| Audio Alert | Operator Alert/Message | Cause | Removal Conditions | Operator Notes |
|---|---|---|---|---|
| Type 2 | “SITE DEFINITION UPDATE PENDED” “ACK” | Site data was updated while a Fire Mission was active. | Operator presses “ACK” | The “Site Definition” message will be pended until EOM is received. |
| Type 2 | “TRANSMIT OVERRUN-RESET TCIM” “ACK” | There are more than 55 message transmissions in progress. | Operator presses “ACK” | Reset the TCIM. |
| Type 2 | “TUBE TEMP SENSOR OUT” “ACK” | A previously operational Tube Temperature Sensor has failed. | Operator presses “ACK” | Monitor rates of fire to determine Safe Time In Tube. |
| Type 2 | “UPDATE RJTD WRONG NAV MODE” “ACK” | NAV Update or Restart attempted when GUN SERVO is active or TBD. | Operator presses “ACK” | Perform a System Restart. |
| Type 2 | “VEHICLE MOTION SENSOR GOOD” “ACK” | The VMS passed a DRUH initiated hardware test and operation has been restored. | Operator presses “ACK” | No further action required. |
| Type 2 | “VEHICLE MOTION SENSOR OUT” “ACK” | DRUH BIT declared the VMS Failed. | Operator presses “ACK” | If in an active Fire Mission, the “VEHICLE MOTION SENSOR OUT” message will be pended until EOM. |
| Type 2 | “WPN OUT” “ACK” | The BCWC has failed. | Operator presses “ACK” | Perform a System Restart. |
| Type 2 | “WPN SUBSYSTEM OUT” “ACK” | The Weapon Control portion of the BCWC (WC) has failed. | Operator presses “ACK” | Perform a System Restart. |
| Type 2 | “ZUPT NO LONGER REQUIRED” “ACK” | The DRUH completed a ZUPT or good GPS aiding data became available. | Operator presses “ACK” | No further action required. |
| Type 2 | “ZUPT REQUIRED” “ACK” | The DRUH requests a ZUPT stop to maintain accuracy. | Operator presses “ACK” | Ensure vehicle is stationary and wait approximately 30 seconds for the “ZUPT NO LONGER REQUIRED” “ACK” message to be displayed. |

## O-4 PDFCS OPERATING CONTROLS AND INDICATORS - CONTINUED

**Table O-10. Low Priority Messages without Audio Alerts**

| Audio Alert | Operator Alert/Message | Cause | Removal Conditions | Operator Notes |
|---|---|---|---|---|
| None | “AZIMUTH OF FIRE NOT IN SECTOR” “ACK” | The entered Azimuth of Fire is outside the entered Sector of Fire. | Operator presses “ACK” | Verify the Sector and Azimuth of Fire and re-enter as needed. |
| None | “CEASE LOAD” | Cease load means that loading of rounds is suspended. If a round is already loaded, it may be shot, and loading will cease. | Operator selects “SHOT”, “CLEAR” or “CHECK”. | If “SHOT” or “CLEAR” is selected, the PDFCS will transition to the Verification display. If “CHECK” is selected, normal “CHECKFIRE” processing is followed. |
| None | “CHANGE COMM CONFIG” “YES” “NO” | Communication Configuration was selected, in the Network Settings Display, and there is an active network already established. | Operator selects “YES” or “NO” | If “YES” is selected, the PDFCS transitions to the Standard Communication Configuration display. The operator may select another Network setting and modify as needed. If “NO” is selected, no changes to the Communication Configuration will be made. |
| None | “CHANGE TO XXXXXX?” “YES” “NO” Where XXXXXXX represents “BACK UP” OR “PRIMARY”. | The controlling FDC field was selected on the Edit Addresses display. | Operator selects “YES” or “NO” | If “YES” is selected, the controlling FDC will change to either “BACK UP” or “PRIMARY”. If “NO is selected, changes to the controlling FDC will be made and the display will transition to the address line. |
| None | “CLEAR *ASTERISKS* TO CONTINUE” “ACK” | ”USE ALL” was selected while there are fields with asterisks in the Edit Addresses display. | Operator presses “ACK” | Review addresses and enter all required fields to clear all asterisks before selecting “USE ALL”. The Fields required are Paladin URN, FDC (control) URN and Station Rank for both. |
| None | “DEGRADED-ACK TO CONTINUE “ACK” | A Degraded Power Up status was detected. | Operator presses “ACK” | No further action required, unless the degraded item is needed for operation. In which case, troubleshoot and cycle PDFCS power. |
| None | “DELETE ADDRESS” “YES” “NO” | “DELETE” was selected in the Edit Addresses display. | Operator selects “YES” or “NO” | If “YES” is selected, the boxed Address or Station Rank will be deleted. If “NO” is selected, no changes will be made to the boxed Address or Station Rank. |
| None | “DISTANCE EXCEEDS 350 KM” “ACK” | A Manual Move Order was entered to a location more than 350KM away. | Operator presses “ACK” | Verify Destination coordinates and re-enter. |

## O-4 PDFCS OPERATING CONTROLS AND INDICATORS - CONTINUED

**Table O-10. Low Priority Messages without Audio Alerts - Continued**

| Audio Alert | Operator Alert/Message | Cause | Removal Conditions | Operator Notes |
|---|---|---|---|---|
| None | "DOWNLOAD COMPLETE" "ACK" | Download of an ET level 3 or 4 scenario from a local disk completed successfully. | Operator presses "ACK" | No further action required. |
| None | "DOWNLOAD FAILED" "ACK" | Download of an ET level 3 or 4 scenario from a local disk did not complete successfully. | Operator presses "ACK" | Check connections and re-try. |
| None | "DUPLICATE ADDRESS" "ACK" | One or more IP/Station addresses are customized in Advanced Communication Settings, which resulted in a duplicate condition. | Operator presses "ACK" | This alert/error may not be noticed until another attempt to change Network settings is made. Advanced Communication Settings should *NEVER* be used unless directed by FDC. Return to "BASIC MODE" to reset default settings, then select Advanced Mode if directed by FDC. |
| None | "DUPLICATE EXTENDED LOT FOUND" "ACK" | A duplicate Propellant Extended Lot was entered. | Operator presses "ACK" | Verify extended Lot and re-enter. |
| None | "DUPLICATE STATION ADDRESS" "ACK" | One or more IP/Station addresses are customized, in Advanced Communication Settings, which resulted in a duplicate condition. | Operator presses "ACK" | This alert/error may not be noticed until another attempt to change Network settings is made. Advanced Communication Settings should *NEVER* be used unless directed by FDC. Return to "BASIC MODE" to reset default settings, then select Advanced Mode if directed by FDC. |
| None | "DUPLICATE VALUE-REENTER" "ACK" | The same value (URN, station rank or IP address) was entered in the Edit Addresses display. | Operator presses "ACK" | Check and re-enter the last value. |
| None | "EARLY END OF MISSION" | A Fire Mission is ended before Rounds Complete. | Operator selects "SHOT", "CLEAR", or "CHECK". | If "SHOT" or "CLEAR" is selected, the PDFCS will transition to the Verification display. If "CHECK" is selected, normal "CHECKFIRE" processing is followed. |

## O-4 PDFCS OPERATING CONTROLS AND INDICATORS - CONTINUED

**Table O-10. Low Priority Messages without Audio Alerts - Continued**

| Audio Alert | Operator Alert/Message | Cause | Removal Conditions | Operator Notes |
|---|---|---|---|---|
| None | "EMPLACEMENT MISSION UPDATED" "ACK" | The Section in Order display has changed; the data will pertain to the FPF. | Operator presses "ACK" | No further action is required. |
| None | "ERROR SEGMENT OVERLAP" "ACK" | The entered Mask data segments overlap. | Operator presses "ACK" | Verify Mask data and re-enter. |
| None | "ERROR-LEFT AND RIGHT EQUAL" "ACK" | The entered Sectors of Fire are equal or Mask segments are equal. | Operator presses "ACK" | The Sectors of Fire and the Mask segments cannot be equal. |
| None | "EXCEEDED 84N OR 80S LATITUDE RE-ENTER VALUE" "ACK" | The entered coordinates are outside the UTM area. | Operator presses "ACK" | Verify location and re-enter coordinates. |
| None | "FPF END OF MISSION" | FPF End Of Mission is received from FDC. | Operator selects "SHOT", "CLEAR", or "CHECK". | If "SHOT" or "CLEAR" is selected, the PDFCS will transition to the Verification display. If "CHECK" is selected, normal "CHECKFIRE" processing is followed. |
| None | "GRID ZONE ZERO NOT VALID" "ACK" | Grid Zone Zero is not a valid Grid Zone. | Operator presses "ACK". | Enter a legal Grid Zone and press ENT again. |
| None | "GUN SWITCH MUST BE OFF" "ACK" | The gun switch is in the "ON" position and a System Restart was attempted by selecting SYSTEM RESTART on the main or maintenance menu, or by attempting to leave embedded training. | Operator presses "ACK". | Turn off the gun switch and initiate system restart again. |
| None | "HOWITZER LOCATION NOT DEFINED" "ACK" | Invalid Howitzer location. | Operator presses "ACK". | Edit location and perform a NAV Update. |
| None | "HOWITZER LOCATION NOT VALID" "ACK" | If operator map is modified and current geodetic location cannot be transformed to the selected operator map. | Operator presses "ACK". | Edit location and perform a NAV Update. |

## O-4 PDFCS OPERATING CONTROLS AND INDICATORS - CONTINUED

**Table O-10. Low Priority Messages without Audio Alerts - Continued**

| Audio Alert | Operator Alert/Message | Cause | Removal Conditions | Operator Notes |
|---|---|---|---|---|
| None | "ILLEGAL HOWITZER AREA" "ACK" | ET levels 3 and 4: Operator entered howitzer area illegal. | Operator presses "ACK" | Verify location and re-enter coordinates. |
| None | "ILLEGAL TARGET AREA" "ACK" | ET levels 3 and 4: operator entered target area illegal. | Operator presses "ACK" | Verify target area and re-enter as needed. |
| None | "INCOMPLETE ADDRESS XXX(X)" "ACK" Where XXX(X) represents the subscriber. (SUB(1), FDC(B) etc.) | "USE ALL" was selected without entering a value in either the URN or Station Rank field on the Edit Addresses Display. | Operator presses "ACK" | Enter a value in the empty field to complete the address. |
| None | "INCOMPLETE ENTRY" "ACK" | "USE ALL" was selected without entering a value in an all-dashed (-----) field. | Operator presses "ACK" | Enter a value in all dashed fields before pressing the "USE ALL" softkey. |
| None | "INVALID DTG VALUE" "ACK" | Incorrect Date Time Group data entered. | Operator presses "ACK" | This message can be displayed in a number of screens. Usually accompanied with on screen dialog to correct date-time. |
| None | "INVALID GATEWAY" "ACK" | A Gateway was entered, that is not on the same local network, in the Advanced Communication Configuration Mode. | Operator presses "ACK" | Verify the Gateway value is defined. The Gateway and FDC IP address will be on the same local network as the Paladin address. |
| None | "INVALID IP-NOT LOCAL" "ACK" | An incorrect IP address was entered in the Advanced Communication Configuration Mode. | Operator presses "ACK" | Verify IP addresses for all subscribers. The IP addresses must all start with the same number. |
| None | "INVALID LOCATION" "ACK" | Target coordinants are not valid for the Howitzer's current location. | Operator presses "ACK" | Operator is allowed to edit coordinants. |
| None | "INVALID SELECTION" "ACK" | Operator made an invalid selection. | Operator presses "ACK" | Verify selection and re-enter. |

## O-4 PDFCS OPERATING CONTROLS AND INDICATORS - CONTINUED

**Table O-10. Low Priority Messages without Audio Alerts - Continued**

| Audio Alert | Operator Alert/Message | Cause | Removal Conditions | Operator Notes |
|---|---|---|---|---|
| None | "MESSAGES HAVE BEEN LOST" "ACK" | The message buffer has overflowed. | Operator presses "ACK" | The message buffer holds 8 messages. Check incoming messages when received. |
| None | "MVV EXTENDED LOT CONFLICT" "ACK" | The PDFCS has stored MVVs, and the operator entered a propellant with the same Extended Lot but different model number into the Ammo Inventory. | Operator presses "ACK" | Verify the conflicting Extended Lot and re-enter as needed. |
| None | "NAV OUT, KEYBOARD ENTRY REQ" "ACK" | The DRUH is not in survey mode and the operator attempts to use tube position to enter azimuth for LEFT or RIGHT edges or an EL value on the SITE DATA Display by pressing ENT with no numbers in the selected field. | Operator presses "ACK" | This can happen when the NAV subsystem is OUT or "OK TO MOVE OR SHOOT" has not yet been displayed. Manually enter SITE DATA values. |
| None | "NO AMMO PRESENT" "ACK" | An attempt to initiate a Paladin Computed Fire Command. | Operator presses "ACK" | The inventory must be edited in order to proceed any further. |
| None | "NO BALLISTIC SOLUTION" "ACK" | No ballistic solution could be obtained for a Direct Fire or Paladin Fire Commands mission. | Operator presses "ACK" | Verify entries and edit as needed. |
| None | "NORTHING VALUE NOT VALID RE-ENTER VALUE" "ACK" | An invalid northing was entered. | Operator presses "ACK" | Verify location and re-enter coordinates. |
| None | "NUMBER OF STATIONS SET TO XX" "ACK" Where "XX" represents the number of stations on this Network. | The value entered in the Station Rank field is greater than the number of stations specified in the Network Settings Display. | Operator presses "ACK" | No further action required. |

## O-4 PDFCS OPERATING CONTROLS AND INDICATORS - CONTINUED

**Table O-10. Low Priority Messages without Audio Alerts - Continued**

| Audio Alert | Operator Alert/Message | Cause | Removal Conditions | Operator Notes |
|---|---|---|---|---|
| None | "OFFLOAD COMPLETE" "ACK" | Offload of ET level 3 or 4 performance data completed successfully. | Operator presses "ACK" | No further action required. |
| None | "OFFLOAD FAILED" "ACK" | Offload of ET level 3 or 4 performance data failed. | Operator presses "ACK" | Check connections and re-try. |
| None | "OPERATION MAP NOT DEFINED" "ACK" | SPHEROID/ DATUM selection is not initialized. | Operator presses "ACK" | Initialize SPHEROID/DATUM. |
| None | "OTHER VOLLEY" | An Active Fire Mission has another volley with different information (shell/fuze/ propellant combinations). | Clears when first volley is fired. | Prepare for second volley. |
| None | "PERFORM SETTER CHECK" "YES" "NO" | "PERFORM SETTER CHECK" was selected. | Operator selects "YES" or "NO" | If "YES" is selected, PERFORM SETTER CHECK will be set to "YES". If "NO" is selected, PERFORM SETTER CHECK will be set to "NO". No further action is required. |
| None | "POSITION COORDINATES INVALID RE-ENTER VALUE" "ACK" | The entered coordinate values do not correlate with the other data entered, or a NAV Update was attempted in ET level 2, 3 or 4. | Operator presses "ACK" | If not in ET level 2, 3, or 4, verify location and re-enter coordinates. NAV Updates are not allowed in ET levels 2, 3, and 4. |
| None | "POSITION IS NOT VALID" "ACK" | A Manual Move Order was entered to an invalid location; e.g. above 84 degrees North. For ET levels 2, 3 and 4, reject any attempted NAV updates. | Operator presses "ACK" | Verify Destination coordinates and re-enter. |
| None | "RANGE TOO FAR" "ACK" | The target location entered in a Paladin Computed Fire Commands fire mission is beyond 50,000 meters from the howitzer's location. | Operator presses "ACK" | Verify target location and edit as needed. |

## O-4 PDFCS OPERATING CONTROLS AND INDICATORS - CONTINUED

**Table O-10. Low Priority Messages without Audio Alerts - Continued**

| Audio Alert | Operator Alert/Message | Cause | Removal Conditions | Operator Notes |
|---|---|---|---|---|
| None | “RESET TCIM” “YES” “NO” | RESET TCIM was selected from the SETUP AND INFORMATION display. | Operator selects “YES” or “NO” | If “YES” is selected, the TCIM will be reset. If “NO” is selected, the TCIM will not be reset. No further action is required. |
| None | “SET ACTIVE” “YES” “NO” | A configured Network was selected that is not currently active. | Operator selects “YES” or “NO” | If “YES” is selected, the selected Network will become active and the previous active Network becomes inactive. If “NO” is selected, the active Network will not change. |
| None | “TRAINING NOT AVAILABLE” “ACK” | A Degraded Power Up status was detected and training is not available. | Operator presses “ACK” | No further action required, unless the degraded item is needed for operation or Training Mode is needed. In which case, troubleshoot and cycle PDFCS power. |
| None | “UNALLOWED-BEING USED BY FM” “ACK” | The operator tried to delete Ammo (i.e. shell, propellant, or fuze) while in the EOM/Continuation state of a Fire Mission. | Operator presses “ACK” | Ammo quantity can be changed, but not deleted, when in a Fire Mission EOM/Continuation state. |
| None | “USE ALL AND COPY” “YES” “NO” | “COPY” was selected in the Network Settings, Select Configuration Option display. | Operator selects “YES” or “NO” | If “YES” is selected, the current Network will be copied and displayed in the Network display. If “NO” is selected, the action to Copy is cancelled. |
| None | “VALUE TOO “*XXXX*”” | The entered number is either “TOO BIG” or “TOO SMALL”. | Operator presses “ACK” | Enter a number value within the range shown in the prompt. |
| None | “WARNING-RANGE SET TO MAXIMUM” “ACK” | The range to the Mask is set to a calculated nominal Maximum range. | Operator presses “ACK” | Verify Mask and contact FDC if an Unsafe condition exists. |

## O-5 DC POWER MESSAGES.

Three Auxiliary Power messages can appear on any menu being displayed on the PDU. Operator actions for any message will be the same regardless of the menu on which it is displayed.

### O-5.1 On Auxiliary Power.

If vehicle battery voltage drops to a point below that needed by the Power Conditioner Unit (PCU-2) to operate the PDFCS, the PCU-2 will automatically switch to auxiliary power (backup batteries) to maintain PDFCS operation. When the switch to auxiliary power occurs, an audible alert will be sounded over the intercom, and a visual alert will be displayed at the bottom of the menu.

**CAUTION**

Prolonged operation on auxiliary power may cause the PDFCS to shut down automatically.

At this time, the vehicle engine must be started to recharge the vehicle batteries.

The operator must press the softkey under ACK to silence the audible alarm and eliminate the message.

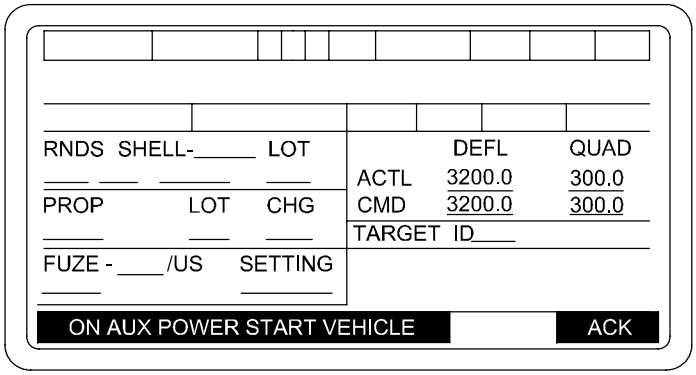


06pc157td

# O-5 DC POWER MESSAGES - CONTINUED

## O-5.2 Auxiliary Power Not Available.

If the auxiliary power batteries are not functional (e.g., low, damaged, or disconnected), a visual alert will be displayed at the bottom of the menu.

The operator must press the softkey under ACK to eliminate the message. At this time, the vehicle engine must be started and kept running to ensure PDFCS operation until auxiliary power is restored.

**NOTE**

This message can also appear during BIT.

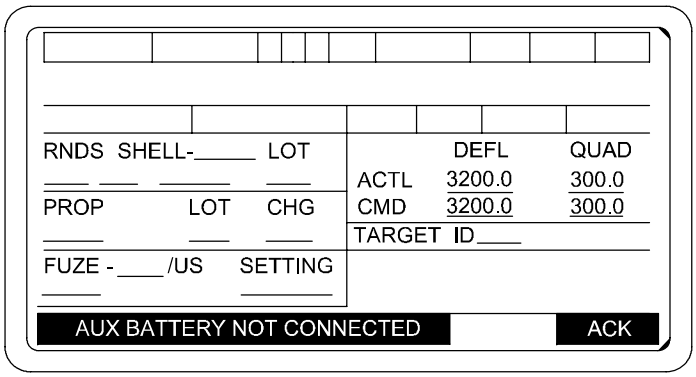


06pc158ta

## O-5.3 Vehicle and Auxiliary Power OK.

When the vehicle battery voltage rises sufficiently, the PCU-2 will automatically switch to vehicle power. When the switch occurs, a visual alert is displayed at the bottom of the menu as shown below.

The operator must press softkey under ACK to eliminate the message.

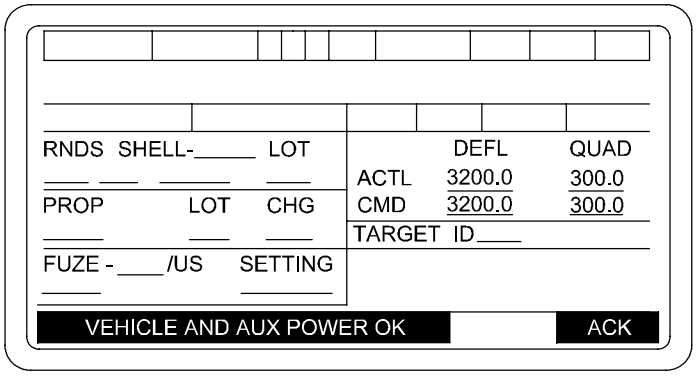


06pc159ta

# O-6 PDFCS INITIALIZATION.

## O-6.1 System Power-Up.

**NOTE**

- AFCS and PDFCS are used interchangeably when viewing PDFCS software screens. AFCS and PDFCS will appear in the on-vehicle software screens and the screens in the technical manual. PDFCS will be used within the text of the technical manual.
- PMVS must be installed and connected prior to turning the vehicle MASTER power switch ON.
- DAGR must be installed and powered prior to turning on PDFCS in order for the PDFCS to use the DAGR data.
- The following steps must be completed prior to POWERING UP and INITIALIZATION of the PDFCS.

a. Outside the howitzer:
   1. Left front drive sprocket must be within 1 meter of SCP.
   2. Gun tube in travel lock.
   3. PMVS connections verified.
   4. FM VOICE/DIGITAL Radio antennas are properly mounted, cables and ground connections verified.
   5. DAGR antenna cable connections verified.

b. Inside the howitzer:
   1. Turret lock in LOCKED position.
   2. DAGR installed.
   3. Set MASTER switch to ON.
   4. Ensure 10 PCU-2 switches are ON.
   5. Turn DAGR ON and FILL verified.
   6. Turn radios ON, and perform VOICE radio check.
   7. Idle engine at 1000 to 1200 RPMs.
   8. Make sure TRAINING switch on PDFCS keypad is OFF.

## O-6 PDFCS INITIALIZATION - CONTINUED

### O-6.1 System Power-Up - Continued

With the DAGR mounted and all external cables attached, press the PWR/QUIT key on the DAGR key pad. The DAGR should power up automatically and perform its self-test (BIT). Operate the DAGR in accordance with the DAGR TM 11-5820-1172-13.

**NOTE**

- If this is an XM982, crypto keys will be loaded by the IFS and the following key loading procedure will be skipped.
- If not performing an IFS mission, key status should be checked before installing DAGR into mount.

If the DAGR does not have a current key (i.e. the DAGR was previously zeroized, newly installed or the key has expired), load a valid key in accordance with the DAGR TM 11-5820-1172-13.

**NOTE**

To load a key, the DRUH must be off, or the P4 DRUH-DAGR signal connector must be disconnected to cause a DAGR COM FAIL. Re-attachment of P4 DRUH-DAGR signal connector after DAGR keying will automatically cause DRUH-DAGR communications to resume if DRUH is on.

If the DAGR antenna has a clear view of the sky, turn DAGR on.

If the antenna's view of the sky is blocked (e.g. the vehicle is in a building, under tree cover or parked next to a large structure), move vehicle until the DAGR antenna is clear.

If the vehicle cannot be moved, place DAGR in Standby mode until the vehicle can be moved to a location with a clear view of the sky.

**NOTE**

If the DAGR is off, the Navigation System will still accept initialization data from the PDFCS for inertial operation and the Navigation System will operate as before.

c. If the antenna has a clear view of the sky and DAGR has a valid position, current GPS time, current GUV key, and has stored a current satellite almanac, DAGR will be acceptable for use in about 3 minutes following the first turn-on of the day. It will take about 90 seconds for subsequent turn-ons. These are the normal operating conditions.

# O-6 PDFCS INITIALIZATION - CONTINUED

## O-6.1 System Power-Up - Continued

### NOTE

PMVS must be installed and connected prior to turning the vehicle MASTER power switch ON.

Make sure TRAINING switch on PDFCS keypad is OFF. Set POWER switch on PDFCS keypad to ON. The normal PDFCS initialization screens will be displayed. In approximately 3 minutes the PDFCS window will open with a blank screen, followed by the POWER UP STATUS screen.

### NOTE

- The time lapse between first three screens can range from 3 to 5 minutes.
- If screen stays blank for more than 7 minutes, power down system.

A SYSTEM VERIFICATION FAILURE message will be displayed only if a failure is detected.

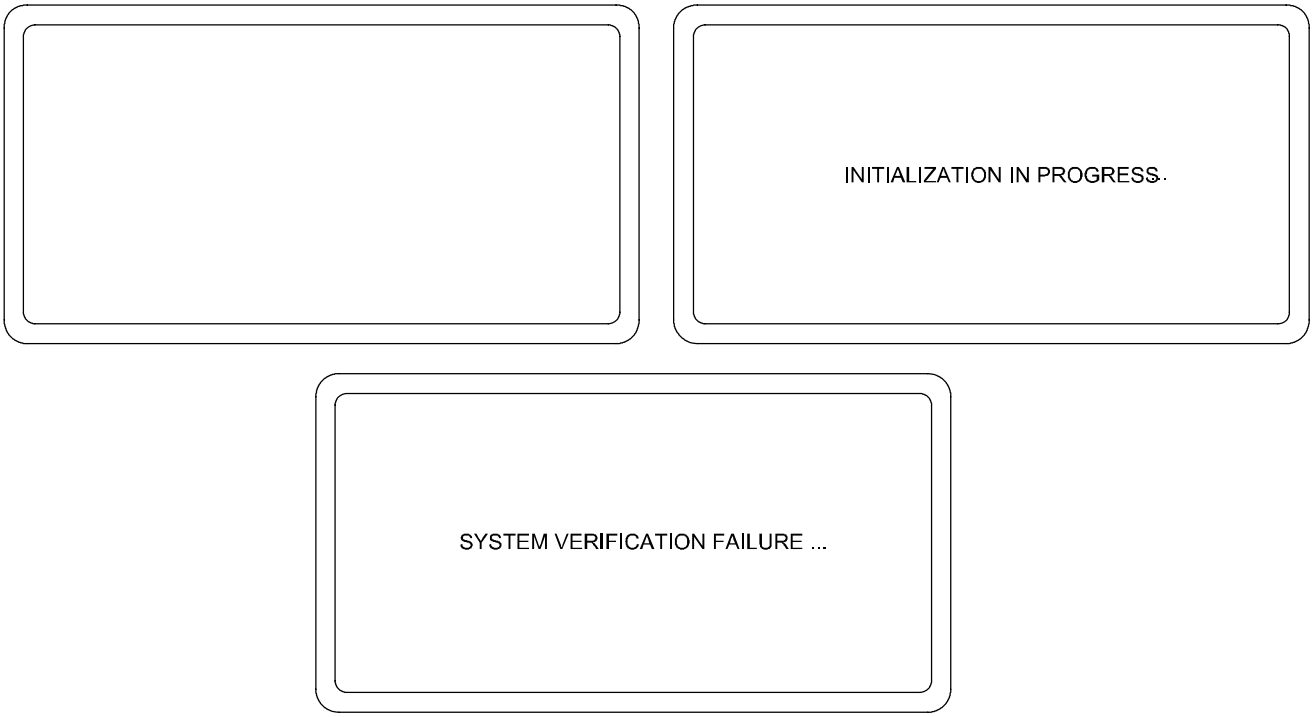


06pc272t

# O-6 PDFCS INITIALIZATION - CONTINUED

## O-6.1 System Power-Up - Continued

After the PDFCS powers up, the DAGR screen should read:

REMOTE CONTROL LOCKOUT
EMERGENCY ZEROIZE ALLOWED
MARK FASTFIX BASIC

At this point the DAGR key pad will become inactive. The only DAGR operation allowed using the key pad is EMERGENCY ZEROIZE.

If this message is not displayed on the DAGR screen, and the Low Priority Message “GPS OUT - DISCONNECTED” is not displayed on the PDU, ensure that the DRUH-DAGR signal connector (P4) plug on the W17A cable is connected and secure. Once this DAGR screen is displayed, proceed with system initialization.

**NOTE**

- NAV SUBSYSTEM includes: VMS, DRUH, and VMS modems
- PCU-2 SUBSYSTEM includes: PCU-2 and both back-up batteries.
- The switches on the PCU-2 are circuit breakers. They should be left ON at all times, so they will not wear out from being turned off and on constantly.

This screen displays the subsystems that are checked by BIT. As the subsystems are checked, the dashed lines will change to a subsystem status (OK, DEGRADED, OUT, - - ). The - - appears on the MVS status line when the PDFCS could not be connected to the MVS, on the PCU status line to indicate a PDCU failure that prevents PCU status from being determined, or on the keypad status line to indicate a PDCU failure that prevents KEYPAD status from being determined. This screen also identifies the system software version.

**NOTE**

- PCU and PCU-2 are used interchangeably when viewing PDFCS software screens. PCU will appear in the software screens. PCU-2 will be used in the text portion of this technical manual when referring to the physical equipment.
- If no IFS is connected, the power-up BIT status will display --.

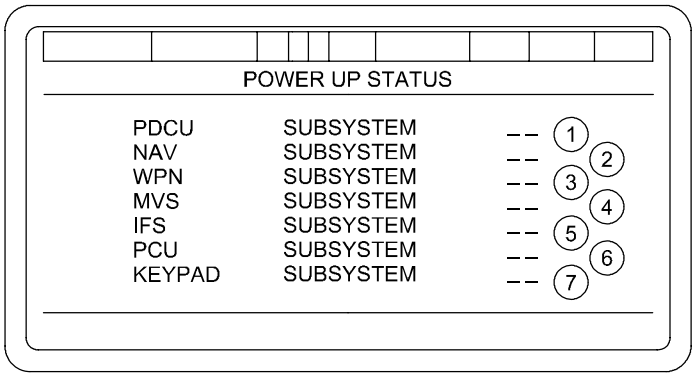


06pc071mg

# O-6 PDFCS INITIALIZATION - CONTINUED

## O-6.1 System Power-Up - Continued

**Table O-11. Power Up Status Display**

| Field | Description | Conditions for display |
|---|---|---|
| 1 | PDCU<br>Range/Values:<br>(1) OUT<br>(2) DEGRADED<br>(3) OK | <br><br>(1) PDFCS startup BIT fails.<br>(2) NAV interface BIT, ET interface BIT or 1553B bus controller BIT fails.<br>(3) Subsystem is fully operational. |
| 2 | NAV<br>Range/Values:<br>(1) - -<br>(2) OUT<br>(3) DEGRADED<br>(4) OK | <br><br>(1) Status not yet determined.<br>(2) NAV interface BIT or DRU BIT fails.<br>(3) VMS BIT fails.<br>(4) Subsystem is fully operational. |
| 3 | WPN<br>Range/Values:<br>(1) OUT<br>(2) DEGRADED<br>(3) OK | <br><br>(1) Servo fails or WPN subsystem not operational.<br>(2) BCWC CPCI operational and cannon setup not acknowledged or tube temperature sensor or BCWC CPCI NVM fails.<br>(3) Subsystem is fully operational. |
| 4 | MVS<br>Range/Values:<br>(1) - -<br>(2) OUT<br>(3) OK | <br><br>(1) Status not yet determined.<br>(2) MVS not operational.<br>(3) Subsystem is fully operational. |
| 5 | IFS<br>Range/Values:<br>(1) - -<br>(2) OUT<br>(3) DEG-MNT<br>(4) DEG-GPS<br>(5) DEG-BAT<br>(6) OK | Note: See Table O-17 for detailed description of IFS status.<br><br>(1) Status not yet determined.<br>(2) The IFS system is not operational.<br>(3) The IFS system status is degraded due to a maintenance issue.<br>(4) The IFS system status is degraded due to a GPS issue.<br>(5) The IFS system status is degraded due to a low battery.<br>(6) Subsystem is fully operational. |
| 6 | PCU<br>Range/Values:<br>(1) DEGRADED<br>(2) OK | <br><br>(1) PCU BIT fails.<br>(2) Subsystem is fully operational. |
| 7 | KEYPAD<br>Range/Values:<br>(1) - -<br>(2) DEGRADED<br>(3) OK | <br><br>(1) Status not yet determined.<br>(2) Keypad BIT fails.<br>(3) Subsystem is fully operational. |

# O-6 PDFCS INITIALIZATION - CONTINUED

## O-6.1 System Power-Up - Continued

In the event of a failure during POWER UP STATUS, the message “DEGRADED – ACK TO CONTINUE” will be displayed on the bottom line of the PDU. To continue, depress softkey under ACK. After the self-test is complete, SELECT OPERATIONAL MODE menu is displayed.

### NOTE

- If there is a gun switch failure during Hardware BIT Test, operator must acknowledge the gun switch status message.
- If all systems are OK, the screen below will not be shown.

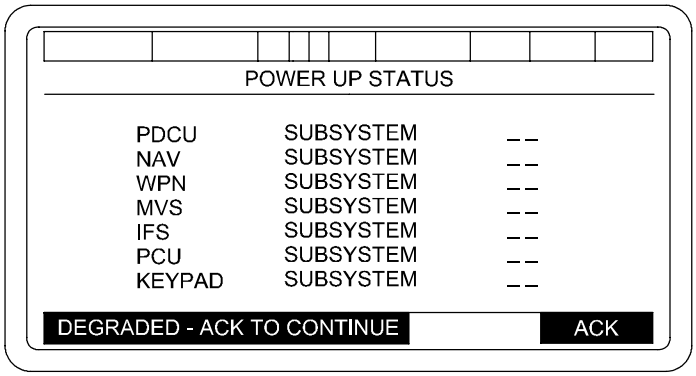


06pc074md

# O-6 PDFCS INITIALIZATION - CONTINUED

## O-6.1 System Power-Up - Continued

**NOTE**

If PDU contains an incorrect configuration, the PDFCS will not allow the operator to select normal operations until a correct PDU software configuration is downloaded.

When configuration verification checking indicates that the executed software configuration is not the same as the acquired software configuration, a short error message “INVALID SOFTWARE CONFIGURATION” “ACK” will appear on the softkey label line of the PDU.

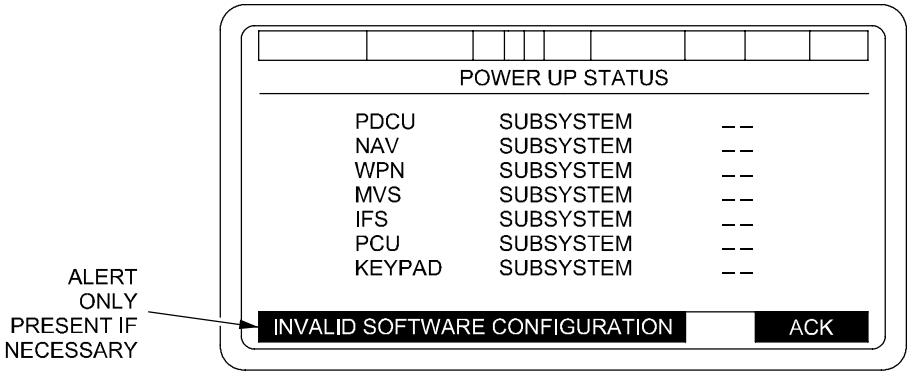


06pc073mk

When a Fire Control Alignment is required by the PDFCS, the alert “FIRE CONTROL ALIGN” “REQ” “ACK” will appear on the softkey label line of the PDU. This alignment must be accomplished before INITIALIZATION of the PDFCS can be completed. If a full Fire Control Alignment including SYSTEM RESTART or Power Cycle is not completed when it is requested, the PDU FAULT lamps and PDCU BIT FC lamp will illuminate and remain lit.

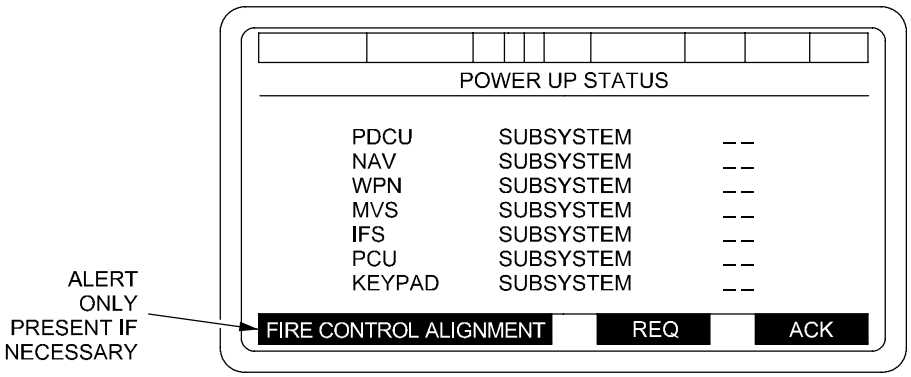


06pc072me

When the message is acknowledged, the PDFCS will proceed to the SELECT OPERATIONAL MODE menu. To view detailed software configuration information for each LRU, MAINTENANCE should be selected IAW procedure in para O-6.3.

After an orderly shutdown, go to para O-6.3. However, if a catastrophic failure happens within the system, follow the procedures below.

## O-6 PDFCS INITIALIZATION - CONTINUED

### O-6.2 Initializing.

When initializing the PDFCS, communications parameters (NETWORK setup display) are entered to establish digital communications. Data to align the navigation system to a known location must also be entered at initialization. Other data to establish date/time, ammunition supply and propellant temperature, TOT response time, load elevation, and sector of fire must be entered before the initialization process is complete. All this data is input during NORMAL OPERATIONS mode which is selected from the SELECT OPERATIONAL MODE menu.

**NOTE**

- It is possible that an ALERT(s) may appear on the bottom line of the SELECT OPERATIONAL MODE screen. To continue, press the ACK softkey.
- NORMAL OPERATIONS and MAINTENANCE shall not be available when the training enable switch is up.

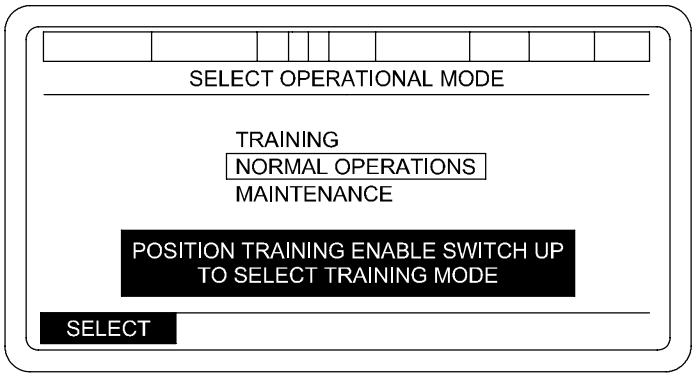


06pc094ma

a. Mode Selection. Set TRAINING ON/OFF switch to OFF when selection other than TRAINING is required. Box in NORMAL OPERATIONS mode, press SELECT key, NETWORK menu will be displayed. The operator has the option of storing up to six NETWORK configurations.

b. NETWORK display. Upon initialization of a previously configured PDFCS, the display lists all previously configured network configurations.

Initialization of a virgin PALADIN, all communications configurations, “CFG”, shall be set to “---” and all other columns will be blank.

Only one network configuration will be active at any one time. The active configuration is identified by the label “*ACTIVE*” in the STATUS column. Inactive configurations will not have anything displayed in the STATUS column. When initializing a virgin Paladin and once the first network is defined, the system shall automatically set to *ACTIVE*.

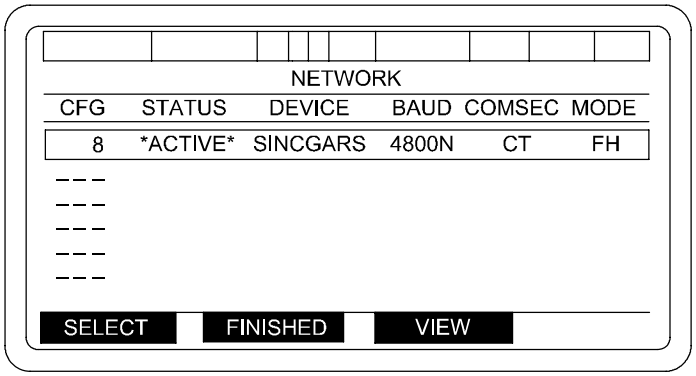


06pc321t

# O-6 PDFCS INITIALIZATION - CONTINUED

## O-6.2 Initializing - Continued

TACFIRE configurations will not display anything in the COMSEC and MODE columns of the NETWORK screen.

188-220 communications configurations identify the Device, Baud Rate, COMSEC and Mode. 188-220 configurations with any customized values identify the Device as “CUSTOM/R” for Radio and “CUSTOM/W” for Two-Wire.

The PDFCS will not reorder network configurations as a result of deletions.

The FINISHED and VIEW softkeys are not visible unless at lease one configuration is defined.

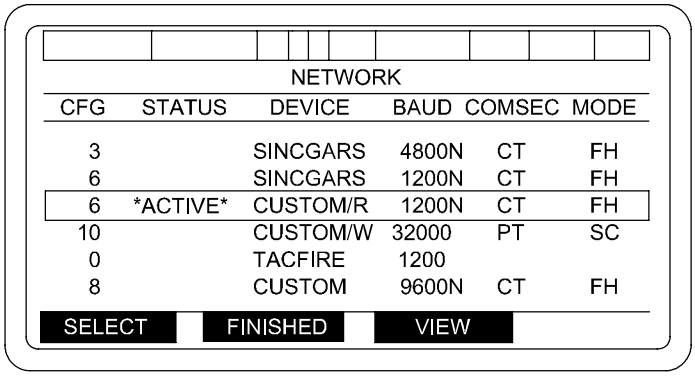


06pc322t

Softkey sequencing shall be as follows:

- SELECT - If the highlighted configuration was previously defined, control transitions to NETWORK SETTINGS-SELECT CONFIGURATION OPTION display. If the highlighted configuration has not been defined, control transitions to NETWORK SETTINGS-STANDARD COMMUNICATION CONFIGURATION display.
- FINISHED - When the operator presses the FINISHED softkey the PDFCS stores all defined network configurations and control transitions to NORMAL OPERATIONAL INITIALIZATION display.
- VIEW - When the VIEW softkey is pressed and the currently selected network configuration has been defined, control transitions to the NETWORK SETTINGS display. If the currently selected network configuration has not been defined, the VIEW softkey is inactive.
- CANCEL - When the CANCEL softkey is pressed any defined configuration values are discarded.

# O-6 PDFCS INITIALIZATION - CONTINUED

## O-6.2 Initializing - Continued

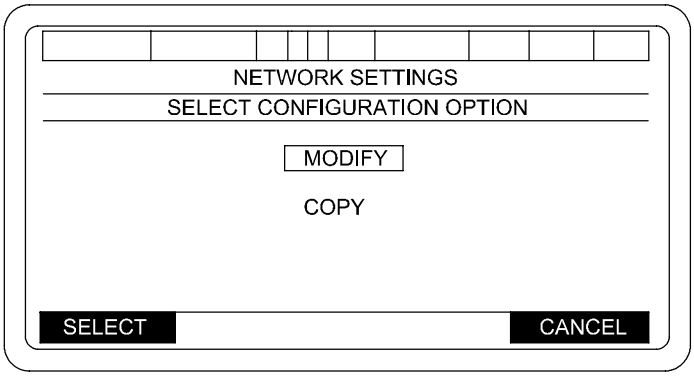


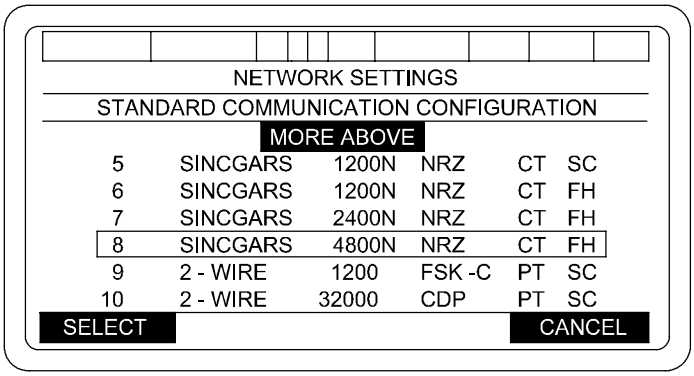


06pc320t

c. Standard Communications Configurations.

**NOTE**

- If the Communication Configuration is not defined in NETWORK display, then configuration #8 will be the default boxed selection.
- If the Communication Configuration is defined in NETWORK display, then that configuration number is the default boxed selection.

# O-6 PDFCS INITIALIZATION - CONTINUED

## O-6.2 Initializing - Continued

(1) PDFCS supports the following 11 predefined communications configurations:

**Table O-12. Network Configurations**

| CONFIGURATION MODE | DEVICE | BAUD RATE | COMSEC | MODE | MODULATION |
|---|---|---|---|---|---|
| 0 | TACFIRE | 4800 | ------ | ------ | NRZ |
| 1 | Sincgars | 4800 | PT | SC | NRZ |
| 2 | Sincgars | 4800 | CT | SC | NRZ |
| 3 | Sincgars | 4800 | CT | FH | NRZ |
| 4 | Sincgars SIP or ASIP | 1200N | PT | SC | NRZ |
| 5 | Sincgars SIP or ASIP | 1200N | CT | SC | NRZ |
| 6 | Sincgars SIP or ASIP | 1200N | CT | FH | NRZ |
| 7 | Sincgars SIP or ASIP | 2400N | CT | FH | NRZ |
| 8 | Sincgars SIP or ASIP | 4800N | CT | FH | NRZ |
| 9 | 2-Wire | 1200 | PT | SC | FSK-C |
| 10 | 2-Wire | 32000 | PT | SC | CDP |

(2) Softkey sequencing shall be as follows:

- SELECT - Selects the currently boxed selection. If the currently boxed selection is Communication Configuration 0, control transitions to TACFIRE NETWORK SETTINGS. If the currently boxed selection is Communication Configuration 1 to 10, control transitions to 188-220 NETWORK SETTINGS.
- CANCEL - If the operator presses CANCEL the current display transitions to the previous display.

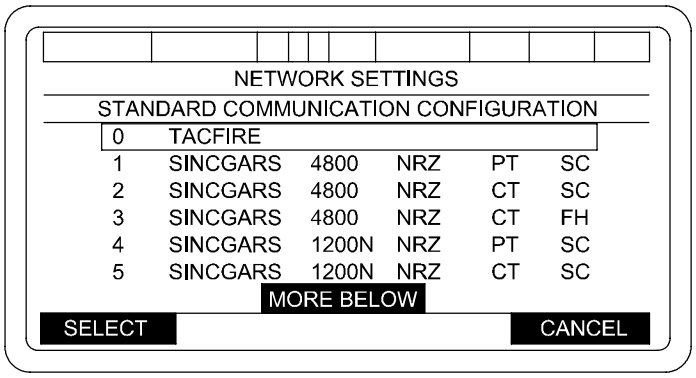


06pc319t

# O-6 PDFCS INITIALIZATION - CONTINUED

## O-6.2 Initializing - Continued

d. Network Settings-Select Configuration Option.

(1) Softkey sequencing shall be as follows:

- SELECT - Selects the currently boxed selection. Transition of control depends upon the selected menu.
- CANCEL - When pressed, control transitions to NETWORK display.

(2) MODIFY selection - Allows the operator to modify the current network configuration. If the current protocol is 188-220, then control transitions to 188-220 NETWORK SETTINGS. If the current protocol is TACFIRE, then control transitions to TACFIRE NETWORK SETTINGS.

(3) SET ACTIVE selection

**NOTE**

SET ACTIVE selection will not be displayed if the current configuration is the active.

This selection allows the operator to set the current network configuration as the ACTIVE configuration. The following operator prompts are displayed: “SET ACTIVE” “YES” “NO”
If NO is selected, no changes will be made.
If YES is selected, then the display will transition as follows:
If the current protocol is TACFIRE, then control shall transition to TACFIRE NETWORK SETTINGS.
If the current protocol is 188-220, then control shall transition to display 188-220 NETWORK SETTINGS.

(4) COPY selection

**NOTE**

COPY selection will not be displayed if all six network configurations have been defined.

Allows the operator to copy the current configuration into the first empty network configuration. The following operator prompt shall be displayed:
“USE ALL AND COPY?” “YES” “NO”
If NO is selected, no changes will be made.
If YES is selected, the current configuration copies into the first undefined network configuration. Control then transitions to the NETWORK display.

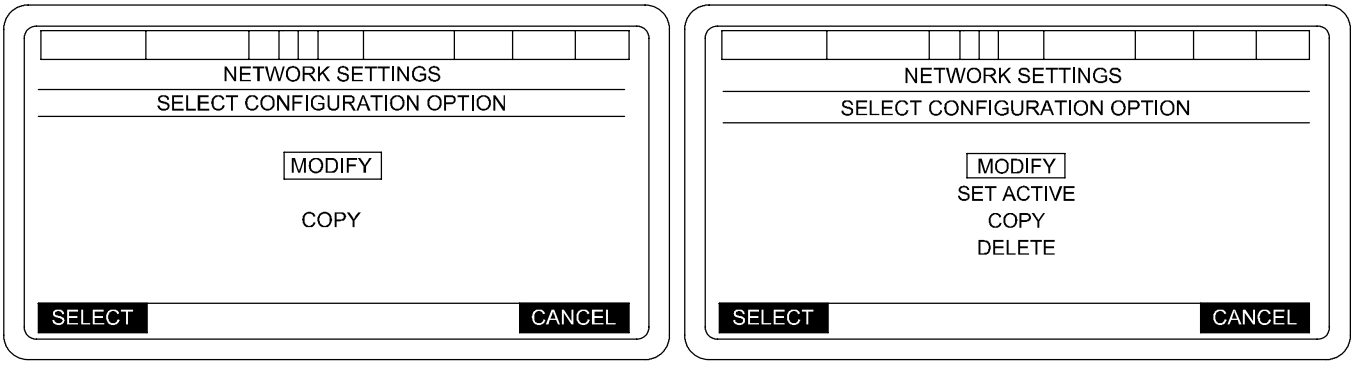


06pc318t

# O-6 PDFCS INITIALIZATION - CONTINUED

## O-6.2 Initializing - Continued

(5) DELETE selection

**NOTE**

DELETE selection will not be displayed if the current configuration is the active configuration.

Allows the operator to delete the current network configuration. The following message shall be displayed:
"DELETE NETWORK?" "YES" "NO"
If NO is selected, no changes will be made.
If YES is selected, the current configuration is deleted and control transitions to the NETWORK display.

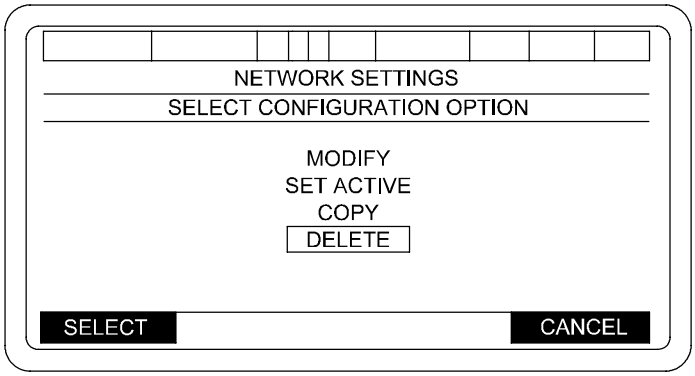


06pc317ta

e. Network Settings-188-220C Protocol.

**NOTE**

- Each selection that requires configuration is marked with an asterisk (*). The default boxed shall be the first asterisked selection. If there are no asterisked selections, the default boxed selection is Net Type when the display is entered.
- The following values are required: "Net Type" and "Edit Addresses". If the "Net Type" is not defined, the "Edit Addresses" selection shall not be visible to the operator. The address definition depends on the "Net Type" value.
- If the "Configuration Mode" is set to BASIC, the "Advanced Settings" selection will not be visible. If the "Configuration Mode" is set to ADVANCED and any "Advanced Settings" have been customized, the "Communication Configuration" value will be displayed as "CUSTOM-XX" where "XX" is the original Communication Configuration number.

# O-6 PDFCS INITIALIZATION - CONTINUED

## O-6.2 Initializing - Continued

SELECT softkey when the following selection is boxed:

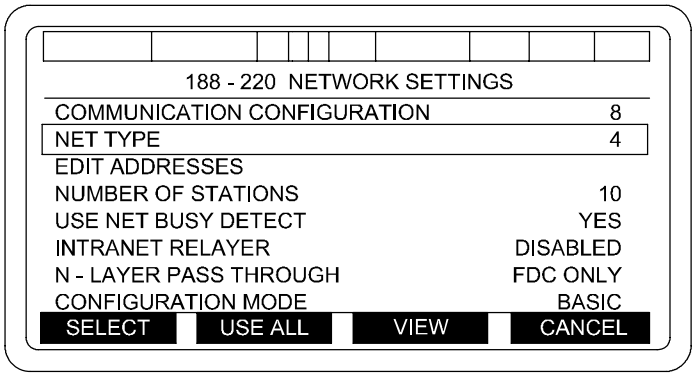


06pc316t

(1) Communication Configuration selection - Allows the operator to change the current Communication Configuration. The following message shall be displayed:
"CHANGE COMM CONFIG?" "YES" "NO"
If NO is selected, no changes will be made.
If YES is selected, the NETWORK SETTINGS-STANDARD COMMUNICATION CONFIGURATION screen will be displayed.

(2) Net Type selection - Prompts the operator to enter a value for the NET TYPE. The valid range is 0 to 255.
If the "Net Type" is modified and the "Configuration Mode" is set to ADVANCED, then default subscriber addresses shall be updated.
If any address becomes a duplicate of another address as a result of changing the "Net Type", the following message will be displayed:
"DUPLICATE IP ADDRESS" "ACK"
If a duplicate address is detected, the "Edit Addresses" selection is marked with an asterisk.

(3) Edit Addresses selection - Allows the operator to modify the network addresses. If the Configuration Mode is set to BASIC, then control transitions to 188-220 Network Addresses (Basic). If the "Configuration Mode" is set to ADVANCED, then control transitions to 188-220 Network Addresses (Advanced).

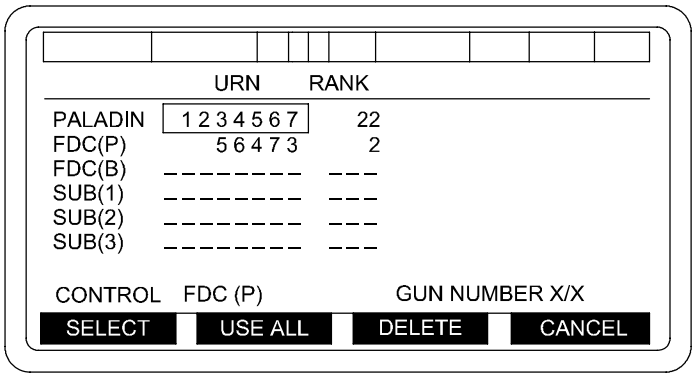


06pc315ta

# O-6 PDFCS INITIALIZATION - CONTINUED

## O-6.2 Initializing - Continued

(4) Number of Stations selection – Prompts the operator to enter a value for NUMBER OF STATIONS. The valid range is 2 to 31 for previously undefined configurations. If the configuration has been previously defined, the valid range shall be XX to 31 where XX is equal to the highest current Rank that was selected.

(5) Use Net Busy Detect selection – If the installed TCIM is not capable of performing Net Busy Detection function, the following message shall be displayed:
"NOT SUPPORTED BY THIS TCIM" "ACK"
If the installed TCIM supports Net Busy Detect and allows the operator to select either YES or NO by pressing the SELECT softkey.
If Use Net Busy Detect is modified when the Configuration Mode is set to ADVANCED, then the value of Busy Detect Override will be set to default value for current settings of Device, COMSEC, Mode, Modulation, Baud Rate and EDC.

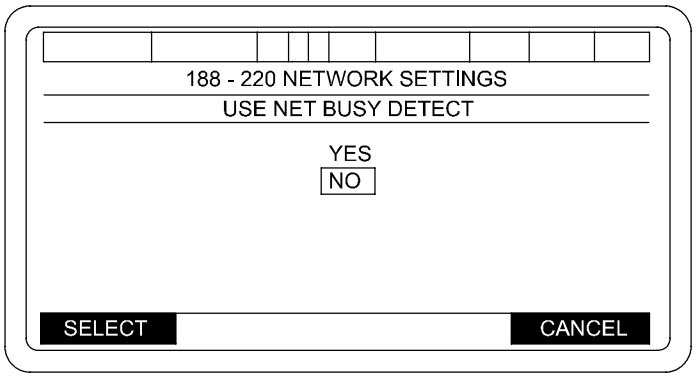


06pc314ta

(6) Intranet Relayer selection – Control transitions to a screen titled "188-220 NETWORK SETTINGS - INTRANET RELAYER" and allows the operator to select either "Enabled" or "Disabled" by pressing the SELECT softkey.

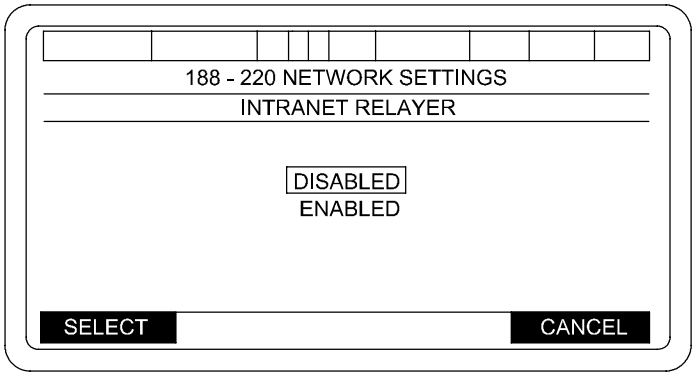


06pc313ta

# O-6 PDFCS INITIALIZATION - CONTINUED

## O-6.2 Initializing - Continued

(7) N-Layer Pass Through selection - Control transitions to 188-220 NETWORK SETTINGS - N-LAYER PASS THROUGH and allows the operator to select "FDC Only", "Enabled", or "Disabled" by pressing the SELECT softkey.

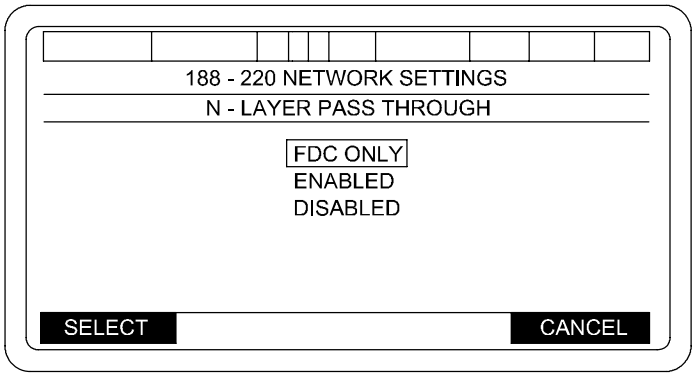


06pc312ta

(8) Configuration Mode selection

If the current Configuration Mode is set to BASIC, the following **WARNING** screen is displayed:

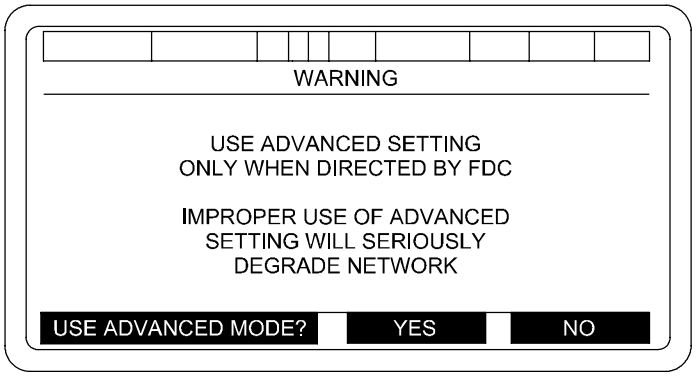


06pc311t

If the operator presses YES, Configuration Mode changes to ADVANCED.
If the operator presses NO, Configuration Mode remains set to BASIC.

If the current Configuration Mode is set to ADVANCED, the following **WARNING** screen is displayed:

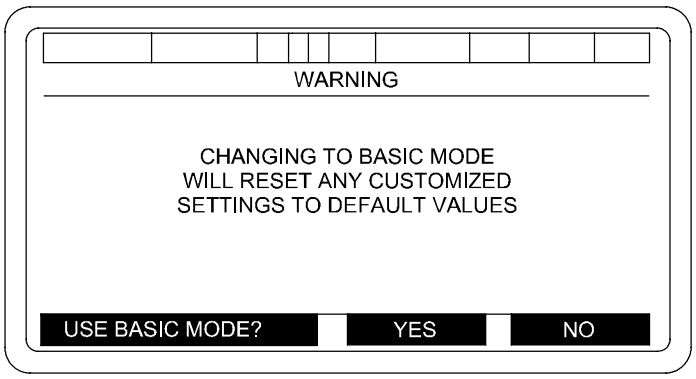


06pc310t

If the operator presses YES, the Configuration Mode changes to BASIC.
If the operator presses NO, the Configuration Mode shall remain set to ADVANCED.

# O-6 PDFCS INITIALIZATION - CONTINUED

## O-6.2 Initializing - Continued

(9) ADVANCED SETTINGS selection

**WARNING**

- Modification and use of ADVANCED SETTINGS should only be performed at the direction of FDC. Improper use of ADVANCED SETTINGS will seriously degrade network.
- ADVANCED SETTING changes are not authorized by the user unless directed by FDC. Failure to comply could result in system degradation.

When ADVANCED SETTING is selected, control transitions to ADVANCED 188-220 PROTOCOL SETTINGS.

f. Network Settings-TACFIRE Protocol.

**NOTE**

- Each selection that requires configuration shall be marked with an asterisk (*). The default boxed will be the first asterisked selection. If there are no asterisked selections, the default boxed selection shall be Edit Addresses when the display is entered.
- The following values are required: “Edit Addresses”, “Net Access Delay (Seconds)”, and “Gun Key Time (Seconds)”.

If the “Device” value is modified and the current “Modulation” becomes invalid, the “Modulation” is set to the default values of SINCGARS/NRZ and 2 Wire/CDP.

If the “Modulation“ value is changed because “Device” was modified, then the “Baud Rate” shall be set to the default value of SINCGARS/NRZ/4800 baud and 2 Wire/CDP/32000 baud.

If the “Modulation” value is modified, and the “Baud Rate” value becomes invalid, then the “Baud Rate” shall be set to default value based on “Device” and “Modulation” setting as follows:

| Device | Modulation | Default Baud Rate |
|---|---|---|
| SINCGARS | NRZ | 4800 baud |
| SINCGARS | Fsk-188B | 1200 baud |
| SINCGARS | Fsk-188C | 1200 baud |
| 2 Wire | CDP | 32000 baud |
| 2 Wire | Fsk-188B | 1200 baud |
| 2 Wire | Fsk-188C | 1200 baud |

Pressing CANCEL softkey transitions to TACFIRE NETWORK SETTINGS display without changing the selection value. Invalid combinations will not be selectable.

# O-6 PDFCS INITIALIZATION - CONTINUED

## O-6.2 Initializing - Continued

SELECT softkey when the following selection is boxed:

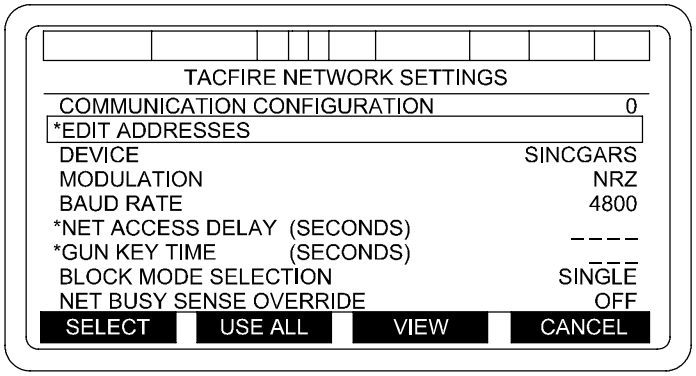


06pc307ta

(1) Communication Configuration selection - Allows the operator to change the current Communications Configuration. The following message will be displayed:
"CHANGE COMM CONFIG?" "YES" "NO"
If NO is selected, no changes will be made.
If YES is selected, the NETWORK SETTINGS-STANDARD COMMUNICATION CONFIGURATION screen will be displayed.

(2) Edit Addresses selection - Transitions to display TACFIRE NETWORK ADDRESSES.

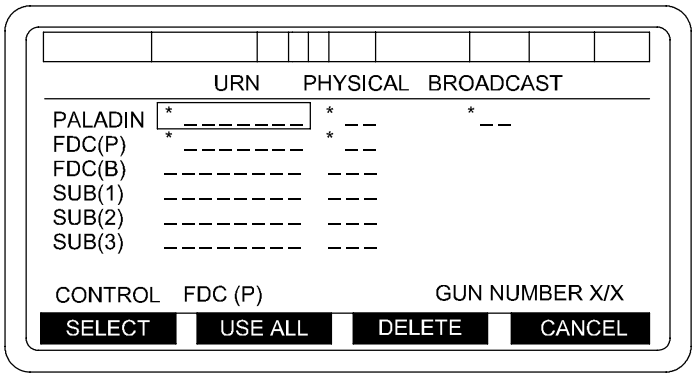


06pc308ta

# O-6 PDFCS INITIALIZATION - CONTINUED

## O-6.2 Initializing - Continued

(3) DEVICE, MODULATION, and BAUD RATE selections – Transitions to TACFIRE NETWORK SETTINGS and subtitled with the selection values shown below:

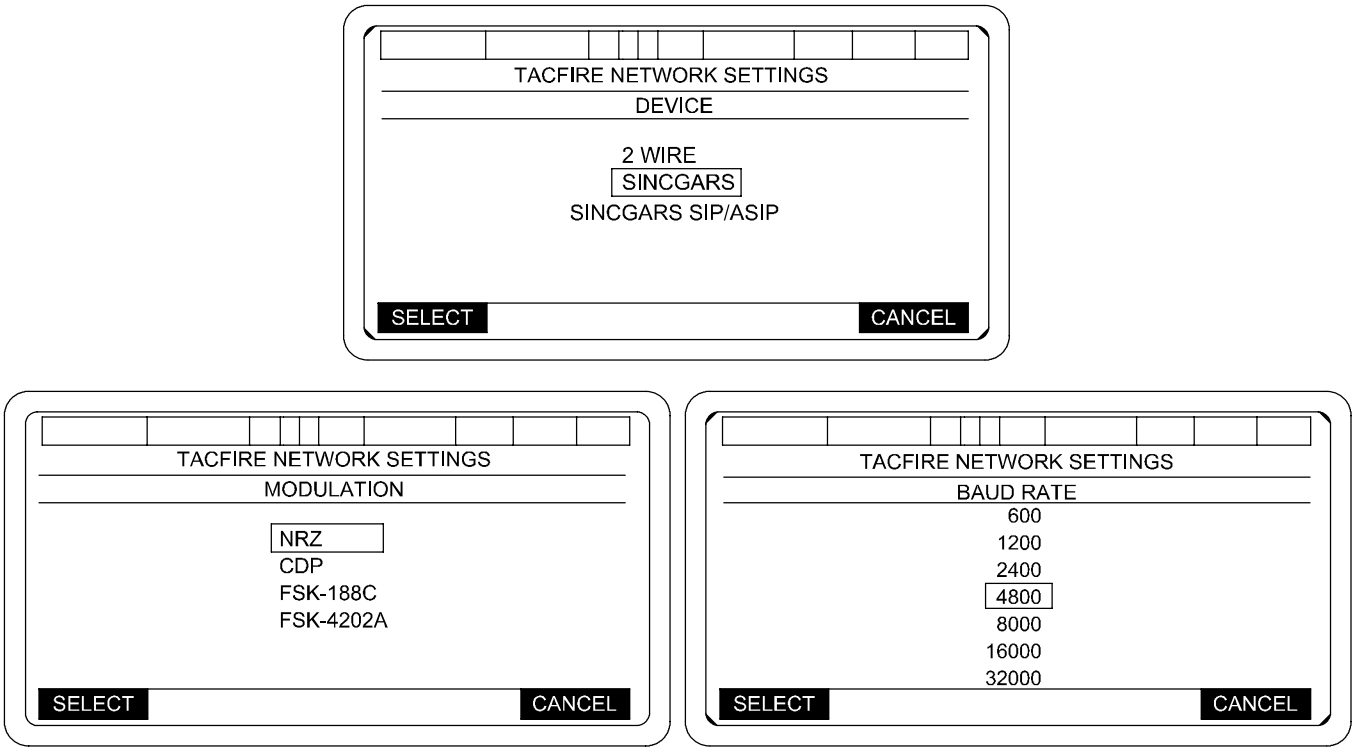


06pc309tc

(4) NET ACCESS DELAY (SECONDS) selection – Selects proper transmission delay time to maintain network access order assigned to various subscribers. To enter a new NET ACCESS DELAY time box in new time. The operator is then prompted to enter a value for the NET ACCESS DELAY in seconds. The valid range is 0.5 seconds to 49.5 seconds in 0.5-second increments.

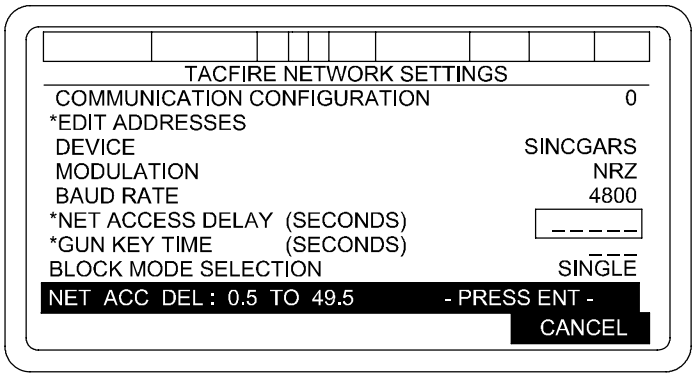


06pc305ta

# O-6 PDFCS INITIALIZATION - CONTINUED

## O-6.2 Initializing - Continued

(5) GUN KEY TIME (SECONDS) selections - Selects assigned transmit delay time. This stabilizes the communications link and allows radio to reach full transmit power before digital data message is sent. When GUN KEY TIME is selected from TACFIRE NETWORK SETTINGS menu, a GUN KEY TIME menu is displayed. Box in proper time. Press SELECT softkey. This will enter data and return to TACFIRE NETWORK SETTINGS menu (new GUN KEY TIME will be shown).

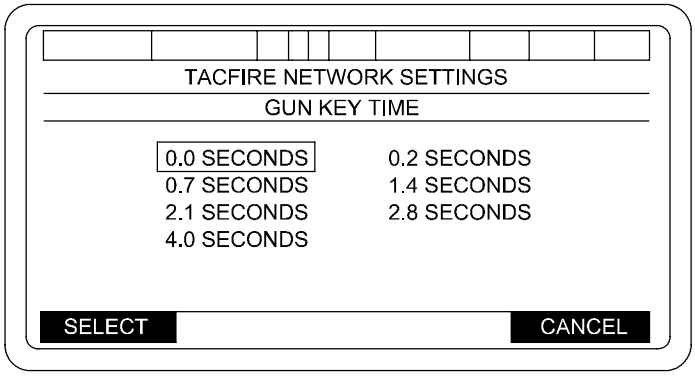


06pc306ta

(6) BLOCK MODE selection - Selects single-block or double-block mode transmission of each data block. Double-block transmission provides for each block to be transmitted twice. When the BLOCK MODE SELECTION is selected, TACFIRE NETWORK SETTINGS - BLOCK MODE will appear with present block mode boxed in. After selection is made, TACFIRE NETWORK SETTINGS display will be shown with the new data in proper field. (Other data will remain unchanged). Double-block mode will be used when requested by Platoon Operations Center (POC).

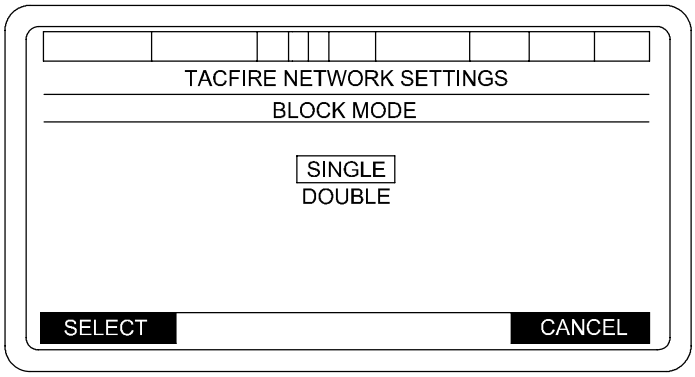


06pc303ta

# O-6 PDFCS INITIALIZATION - CONTINUED

## O-6.2 Initializing - Continued

(7) NET BUSY SENSE OVERRIDE selection – Used to force a message through when communication net is degraded or jammed (message traffic or noise is sensed by communications processor). Selecting NET BUSY SENSE OVERRIDE (ON) when other subscribers are transmitting can cause message errors in radio traffic, and denies the other subscribers access. Consult unit SOP for proper use of NET BUSY SENSE OVERRIDE and press SELECT key. A TACFIRE NETWORK SETTINGS menu will be displayed showing present status boxed in. After proper selection, YES or NO is made, new data will be shown in the proper field. (Other data remains unchanged.)

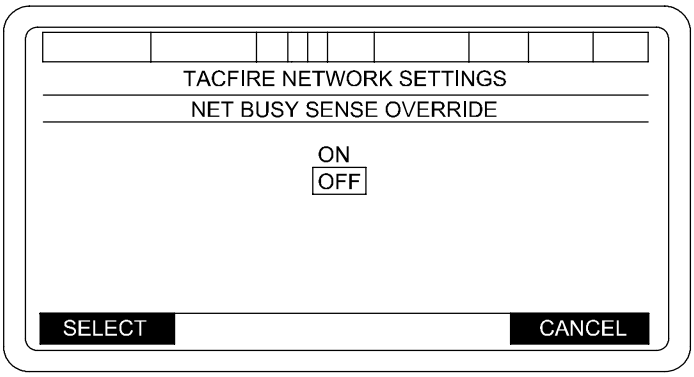


06pc304ta

Softkey sequencing shall be as follows:

- USE ALL – If any selection is marked with an asterisk (*), the following message is displayed:
  "CLEAR *ASTERISKS* TO CONTINUE" "ACK"
  If all asterisks have been cleared, control transitions to NETWORK display.
- VIEW – Control transitions to display all protocol and address information for review using the same format as actual selection displays except fields cannot be selected.
- CANCEL – Discards any changes and control transitions to NETWORK display.

g. 188-220 Network Addresses (Basic).

**NOTE**

Each selection that requires configuration will be marked with an asterisk (*). The following values are required: PALADIN URN, PALADIN RANK, Controlling FDC URN, Controlling FDC RANK. Once the selection has been configured, the asterisk will be cleared.

SELECT softkey – Selects currently boxed selection. Transition of control depends on currently selected menu item as described below:

(1) CONTROL Row selection – If current controlling FDC is the primary FDC, the following message is displayed:
"CHANGE TO BACKUP?" "YES" "NO"
If the current control FDC is the backup FDC, the following message is displayed:
"CHANGE TO PRIMARY?" "YES" "NO"
If NO is selected, no changes will be made.
If YES is selected, the controlling FDC value shall be toggled with its current state.

# O-6 PDFCS INITIALIZATION - CONTINUED

## O-6.2 Initializing - Continued

(2) URN Column selection – Prompts the operator to enter a URN value ranging from 0 to 16,777,214. When the ENT key is pressed, the values shall be checked for duplicate URN values.
If a duplicate value is found, the following message will be displayed:
"DUPLICATE VALUE-REENTER" "ACK"
Once the message is acknowledged, the operator is required to enter a new URN or press CANCEL softkey.

(3) RANK Column selection – Prompts the operator to enter PDFCS station rank range 1 to 31. When the ENT key is pressed, values will be checked for duplicate Station Rank values. If a duplicate value is found within the current configuration, the following message will be displayed:
"DUPLICATE VALUE-REENTER" "ACK".
Once the message is acknowledged, the operator is required to enter a new Station Rank value or press CANCEL.

If the Rank entered exceeds the Number of Stations value, the Number of Stations shall be set to the Rank value entered and the following message shall be displayed:
"NUMBER OF STATIONS SET TO XX" "ACK"
Where XX is the Rank value entered. Once the message is acknowledged, control transitions back to 188-220 Networks Addresses (Basic).

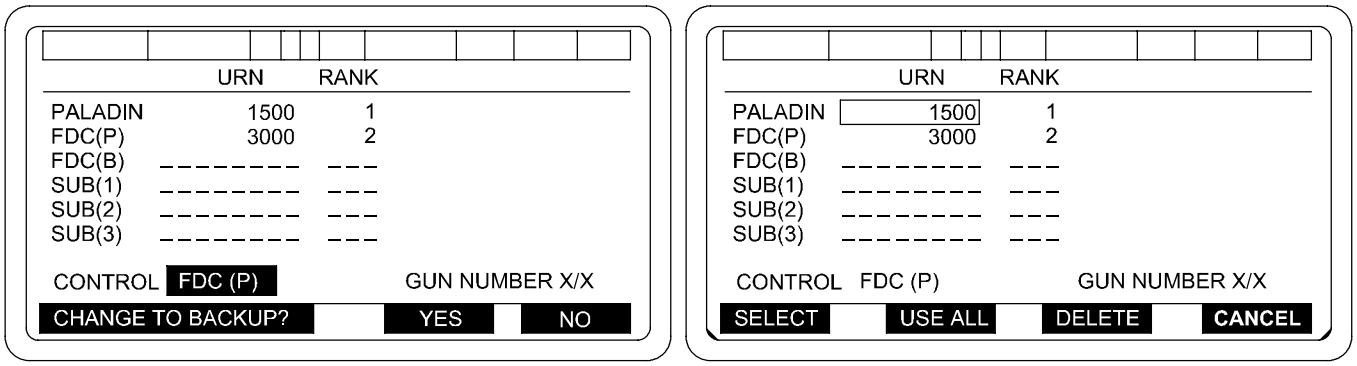


06pc302t

(4) GUN NUMBER column selection – control transitions to 188-220 NETWORK SETTINGS – GUN NUMBER display.

Softkey sequencing shall be as follows:

- USE ALL softkey – The following validity checks will be performed. If all are valid, control shall transition to 188-220 NETWORK SETTINGS. If any menu selections are marked with an asterisk (*), the following message will be displayed:
"CLEAR *ASTERISKS* TO CONTINUE" "ACK"
Address Completion Check – If a subscriber entry line has been incompletely defined (URN defined and Rank not defined, or Rank defined and URN not defined) then the following message will be displayed:
"INCOMPLETE ADDRESS XXXXXX" "ACK"
Where "XXXXXX" identifies the incomplete subscriber: FDC(P), FDC(B), SUB(1), SUB(2) or SUB(3).

# O-6 PDFCS INITIALIZATION - CONTINUED

## O-6.2 Initializing - Continued

- DELETE softkey – Allows the operator to delete the currently boxed URN or Rank. The following message will be displayed:
  "DELETE ADDRESS" "YES" "NO"
  If NO is selected, no changes will be made.
  If YES is selected, the current selection is deleted and its value displayed as a dashed value.
  Pressing the DELETE softkey when Control FDc selection is boxed will have no effect.
- CANCEL softkey – Discards any changes made to the addresses, control transitions to 188-220 – NETWORK SETTINGS.

h. 188-220 Network Settings—Gun Number Display.

softkey sequencing shall be as follows:

- SELECT – Selects the gun number currently boxed, and assigns it as the gun number for the PDFCS address. Control then transitions to 188-220 NETWORK ADDRESSES (Basic).
- CANCEL – Allows the operator to exit the screen without making any changes. Control then transitions to 188-220 NETWORK ADDRESSES (Basic).

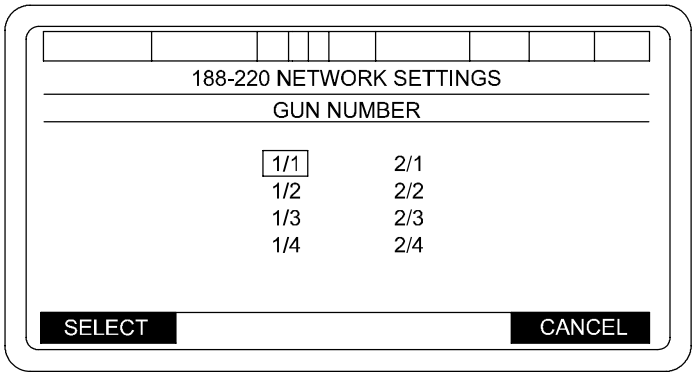


06pc300ta

i. TACFIRE Network Addresses.

Each selection that requires configuration is marked with an asterisk (*). The following values are required:

PALADIN URN
PALADIN Physical Address
PALADIN Broadcast Address
GUN
Controlling FDC URN
Controlling FDC Physical Address

SELECT softkey – Selects the currently boxed selection. Transition of control depends on currently selected menu item as described below:

(1) CONTROL Row selection – If current controlling FDC is the primary FDC, the following message is displayed:
"CHANGE TO BACKUP?" "YES" "NO"
If the current controlling FDC is the backup FDC, the following message is displayed:
"CHANGE TO PRIMARY?" "YES" "NO"
If NO is selected, no changes are made.
If YES is selected, the controlling FDC value will be toggled from its current state.

# O-6 PDFCS INITIALIZATION - CONTINUED

## O-6.2 Initializing - Continued

(2) URN Column selection – Prompts the operator to enter a URN value. The valid range is 0 to 16,777,214. When the ENT key is pressed, the values are checked for duplicate URN values.
If a duplicate value is found within the current configuration, the following message is displayed:
"DUPLICATE VALUE–REENTER" "ACK"
Once the message is acknowledged, the operator is required to enter a new URN value or press CANCEL softkey.

(3) PHYSICAL Column Selection – Control transitions to NETWORK SETTINGS – TACFIRE ADDRESSES with currently selected subscriber identified in the subtitle.

(4) BROADCAST Column Selection – Control transitions to NETWORK SETTINGS – TACFIRE ADDRESSES with PALADIN Broadcast Address identified in the subtitle.

(5) GUN NUMBER column Selection – Control transitions to TACFIRE NETWORK SETTINGS – GUN NUMBER.

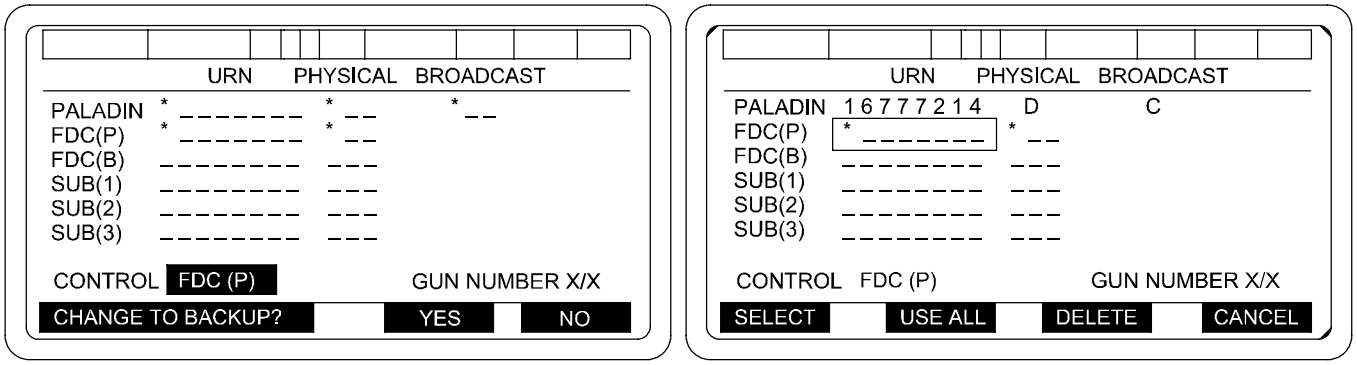


06pc301ta

Softkey sequencing shall be as follows:

- USE ALL – If any selection is marked with an asterisk (*), the following message is displayed:
"CLEAR *ASTERISKS* TO CONTINUE" "ACK"
If a subscriber entry line is incompletely defined (URN defined and Address not defined, or Address defined and URN not defined) then the following message is displayed:
"INCOMPLETE ADDRESS XXXXXX" "ACK"
Where "XXXXXX" identifies the incomplete subscriber: FDC(P), FDC(B), SUB(1), SUB(2) or SUB(3).
If all asterisks are cleared, the address information shall be saved and control transitions to TACFIRE NETWORK SETTINGS.

- DELETE – Allows the operator to delete the currently boxed URN or address value. The following message will be displayed:
"DELETE ADDRESS" "YES" "NO"
If NO is selected, no changes are made.
If YES is selected, current selection is deleted and its value displayed as a dashed value.
Pressing the DELETE softkey when Control FDC selection is boxed will have no effect.

- CANCEL – Disregards any changes made to the addresses and control transitions to TACFIRE NETWORK SETTINGS.

# O-6 PDFCS INITIALIZATION - CONTINUED

## O-6.2 Initializing - Continued

j. Network Settings – Tacfire Addresses Display.

**NOTE**

The screen subtitle will display which value is being entered as follows:

PALADIN PHYSICAL ADDRESS
PALADIN BROADCAST ADDRESS
PRIMARY FDC ADDRESS
BACKUP FDC ADDRESS
OTHER SUBSCRIBER (1) ADDRESS
OTHER SUBSCRIBER (2) ADDRESS
OTHER SUBSCRIBER (3) ADDRESS

Addresses currently assigned, with the exception of the address for the value displayed in the subtitle, is not selectable.

softkey sequencing shall be as follows:

- SELECT – Selects the value currently boxed, and assigns it as the address for the device displayed in the subtitle. Control then transitions to TACFIRE NETWORK ADDRESS.
- CANCEL – Control transitions to TACFIRE NETWORK ADDRESSES without making any changes.

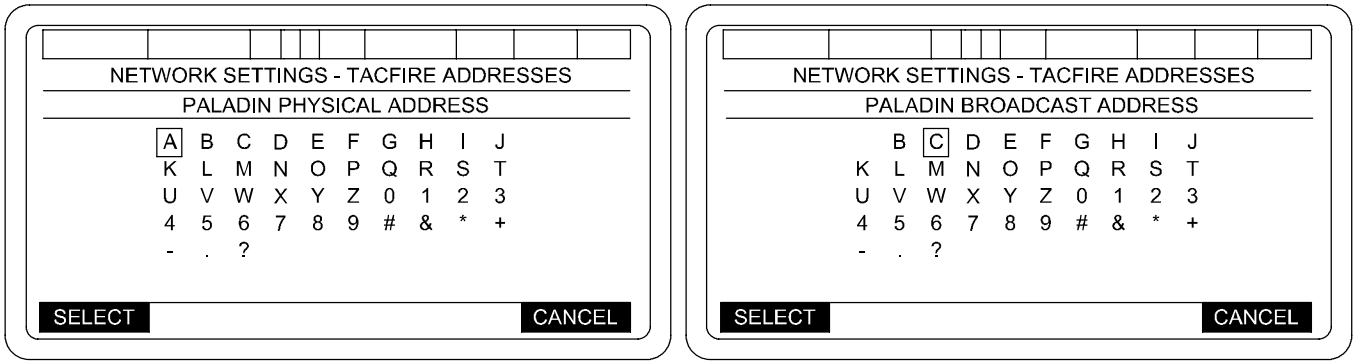


06pc299ta

# O-6 PDFCS INITIALIZATION - CONTINUED

## O-6.2 Initializing - Continued

k. TACFIRE Network Settings - Gun Number Display.

softkey sequencing shall be as follows:

- SELECT - Selects the gun number currently boxed, and assigns it as the gun number for the PALADIN address. Control then transitions to TACFIRE NETWORK ADDRESSES.
- CANCEL - Allows the operator to exit the screen without making any changes. Control then transitions to TACFIRE NETWORK ADDRESSES.

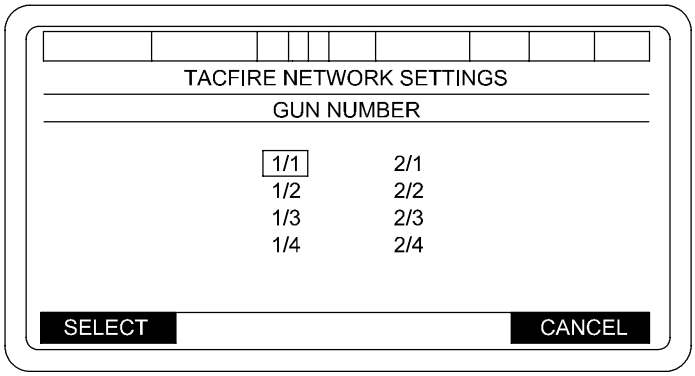


06pc300tf

l. Other Initialization Steps. When NETWORK has been initialized, a SETUP AND INFORMATION menu will be displayed. There are two pages to this menu. By pressing NEXT PAGE key, second page will be displayed.

### NOTE

- Items marked with an asterisk (*) must be entered to complete initialization process. Without these data entries, the system will not be completely initialized and the PDFCS will not be able to receive a mission. The PDFCS will automatically move the cursor box to the next item that has an asterisk (*) each time initialization of a particular item has been completed.
- The NAV UPDATE selection will be blank when a command has been sent to the navigation subsystem and has not yet been completed.
- During initialization, some items will not appear. These items become available following completion of initialization.
- If the PDFCS has a valid NVM the FAST INIT softkey will be available during initialization. Pressing the FAST INIT softkey shall clear the asterisk (*) from the FDC DATA XFER, AMMO INVENTORY, PROP TEMP, and TOTAL RESPONSE fields.

# O-6 PDFCS INITIALIZATION - CONTINUED

## O-6.2 Initializing - Continued

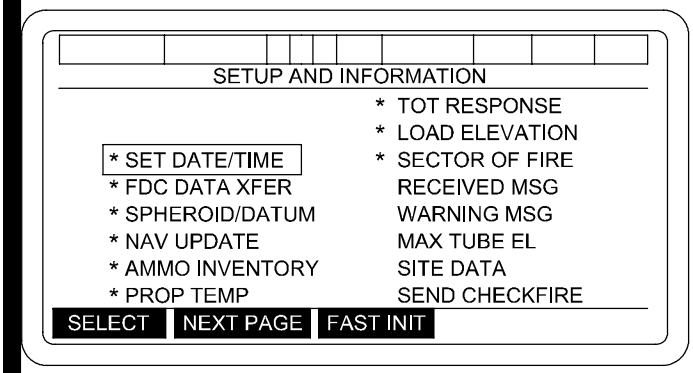


06pc327ta

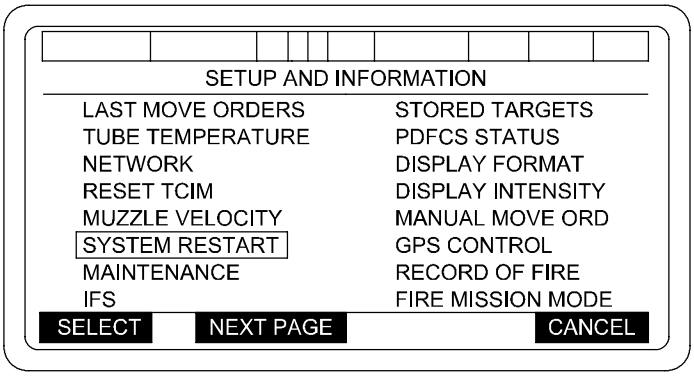


06pc261tf

Steps of other initialization data entry are done as follows:

(1) SET DATE/TIME Group - This data is required for proper communications and is used for TOT data and other time related tasks and missions. From SETUP AND INFORMATION menu, box in SET DATE/TIME. Press SELECT key. This will cause a SET DATE/TIME Group menu to be displayed. If GPS data is available select USE GPS. Note, GPS Time is ZULU (Greenwich Mean Time) when USE GPS selected, all times will be aligned to ZULU (Local ZULU and GPS). If GPS data is not available or if POC has instructed you not to use GPS proceed as follows:

(a) Enter two digits each for Year, Month, Date, Hour and Minute into boxed-in area.

(b) If a mistake is made prior to typing in all 10 digits, press CLR key and try again. If all 10 digits have been typed in, then menu will automatically show a SET DATE/TIME GROUP display with prompt.

(c) If incorrect data has been typed in after all 10 digits have been entered, press CANCEL key. This will return display to SET DATE/TIME menu. Then proceed with reentering correct data for Date/Time Group.

(d) To ensure proper time synchronization between the PDFCS and POC/FDC, a countdown to MARK should be controlled by the POC. If data is correct when MARK is announced by POC, press MARK key to start the clock. This will return the display to the SETUP AND INFORMATION menu.

(e) Date/Time setting on system - Defaults to system clock if no other input is entered in. FDC and the PDFCS messages will be rejected if more than 60 minutes difference between FDC time and PDFCS time has elapsed. Unit SOP needs to be in real Date/Time.

# O-6 PDFCS INITIALIZATION - CONTINUED

## O-6.2 Initializing - Continued

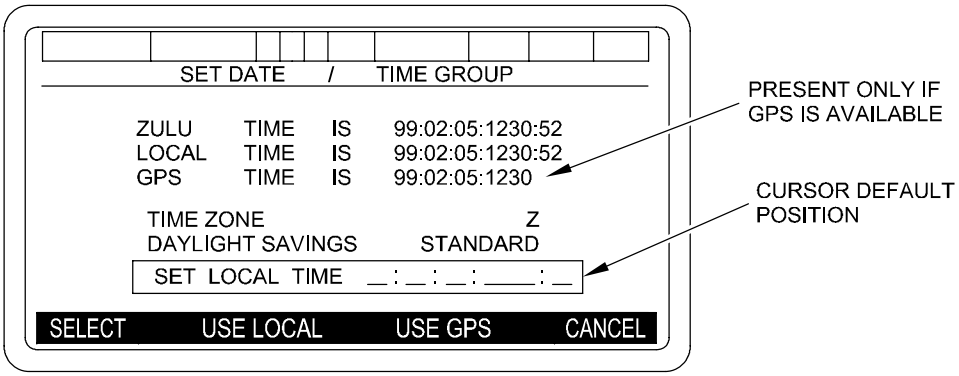


06pc177ta

**NOTE**

Upon entering the Current DTG, Current Zulu, and Current GPS time, if available, shall be displayed to the operator. Operator must enter Time Zone, Daylight Savings and NEW DTG. The first time the PDFCS-XXI program is executed the Zulu and Local time will be calculated from the hardware clock.

SELECT TIME ZONE - ENTER SELECT TIME ZONE IN ACCORDANCE WITH UNIT SOP.

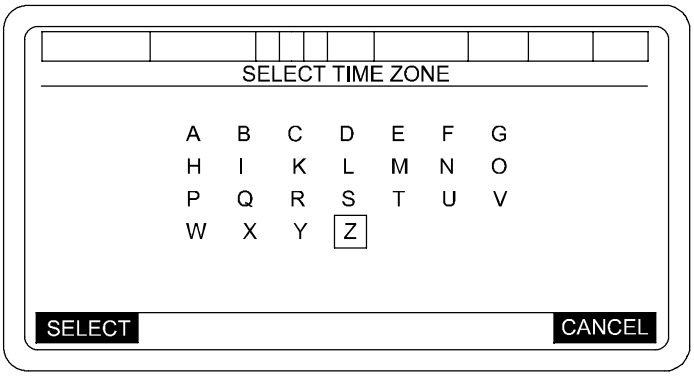


06pc178ta

SELECT DAYLIGHT SAVINGS - ENTER SELECT DAYLIGHT SAVINGS TIME IN ACCORDANCE WITH UNIT SOP.

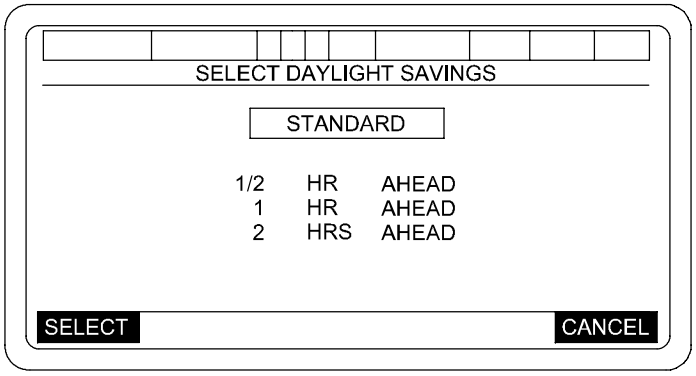


06pc179ta

# O-6 PDFCS INITIALIZATION - CONTINUED

## O-6.2 Initializing - Continued

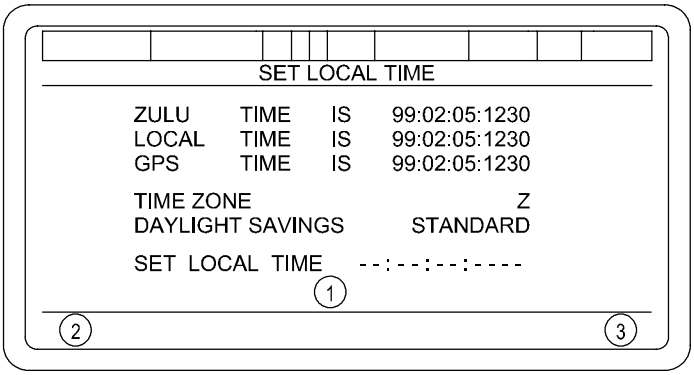


06pc180tc

1

**TYPE IN NEW DTG - YY:MM:DD:HHMM** = Shall appear below the SET LOCAL TIME row upon entry to display above menu. Operator must enter date in format displayed (YY:MM:DD:HHMM). Operator may press CLEAR any time to reset entry.

**PRESS MARK TO SET LOCAL TIME** = Shall appear below the SET LOCAL TIME row upon entry of the last digit of the minute.

2

**MARK** = The MARK key shall be displayed upon entry of the last digit of the minute. When the MARK key is pressed the Local Time shall be processed and returned to the SET UP AND INFORMATION menu.

**INVALID DTG VALUE** **ACK** = If an invalid DGT is entered, this error shall be displayed to the operator. Press "ACK" and re-enter the date and time.

3

**CANCEL** = When PRESS MARK TO SET LOCAL TIME is displayed and the CANCEL key is pressed the SET LOCAL TIME entries shall be cleared and the operator shall be able to enter a new LOCAL TIME.

= When the CANCEL key is pressed under all other conditions to display the SETUP AND INFORMATION menu will be displayed.

Date/Time setting on System - Defaults to system clock if no other Input is recorded in FDC and PDFCS. Messages will reject if more than 60 minutes has elapsed. Unit SOP needs to be in real Date/Time.

# O-6 PDFCS INITIALIZATION - CONTINUED

## O-6.2 Initializing - Continued

### NOTE

The FDC data transfer must be done each time you initialize the PDFCS, if the FDC/FDC is operational.

(2) FDC DATA XFER – To get initialization data from the POC/FDC, box in FDC DATA XFER and then press SELECT key. This will cause a FDC DATA XFER menu to be displayed with INITIALIZATION already boxed and Operator Alert. Pressing YES key will send a request to POC/FDC for needed data. Data includes: Subscriber File Message, Map Modification Input Message, Computer Meteorological Message, and Registration Data Input Message. This ensures that operator can properly communicate with other subscribers and can compute fire mission accurately. If NO ACK REQ INIT is displayed, contact POC to ensure that proper initialization has taken place. Repeat procedure if required. When initialization is complete, press CANCEL key.

If FDC DATA XFER does not have an asterisk (*), then pressing the SELECT key will cause a FDC DATA XFER menu to be displayed without INITIALIZATION boxed. Box in INITIALIZATION and press SELECT key to provide the Operator Alert. Pressing YES sends the request to POC/FDC as described above.

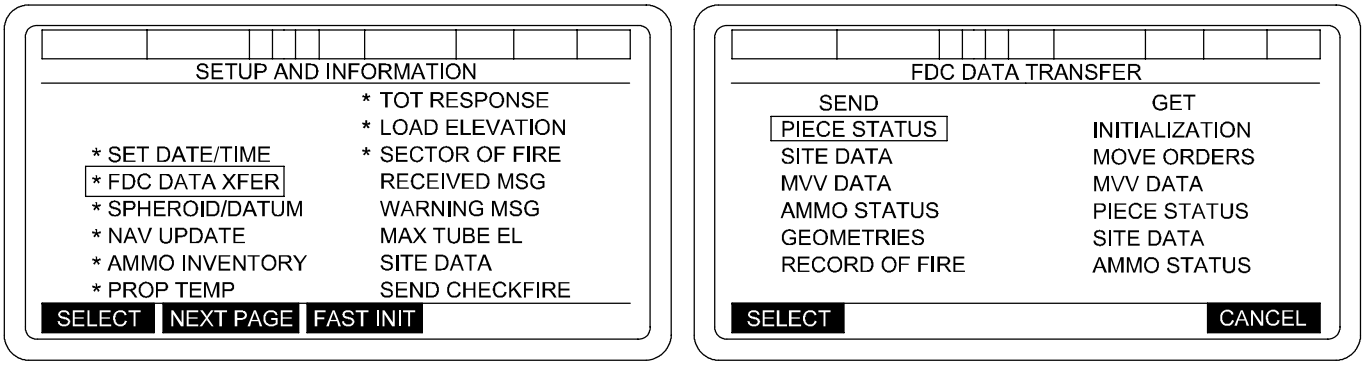


06pc323t

SELECT softkey – The following message will be displayed: “ARE YOU SURE?” “YES” “NO”.

CANCEL softkey – Selection of this key will transition display back to the SETUP AND INFORMATION screen without cancelling any SEND or GET requests.

# O-6 PDFCS INITIALIZATION - CONTINUED

## O-6.2 Initializing - Continued

(3) SELECT SPHEROID/DATUM - The FDC DATA XFER, INITIALIZATION data includes a SPHEROID/DATUM.

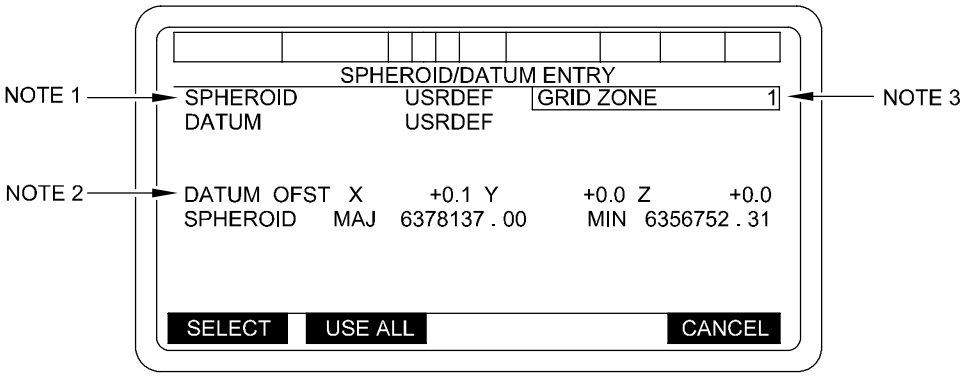


06pc249tb

Check to see if all the data is correct. If it is correct, press the USE ALL key, and proceed with the initialization. If an entry is not correct, select that field and make corrections.

NOTE 1 Selection of this field will display SELECT SPHEROID menu.

NOTE 2 Field is only present if user defined USRDEF DATUM is used.

NOTE 3 When GRID ZONE is selected the following will be displayed.

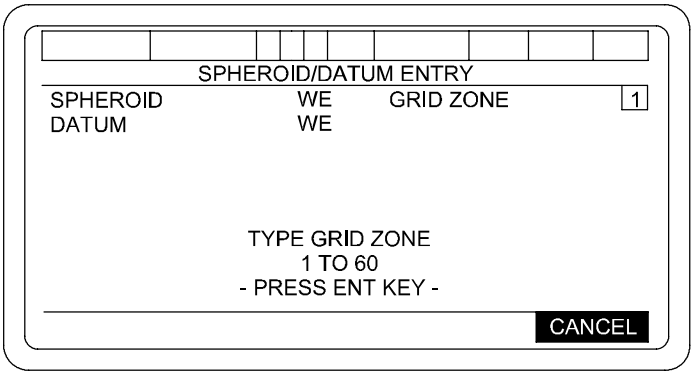


06pc250ta

# O-6 PDFCS INITIALIZATION - CONTINUED

## O-6.2 Initializing - Continued

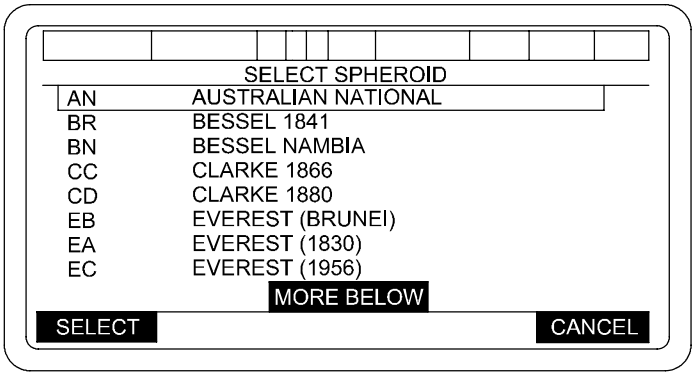


06pc251ta

When more than one page is required to display choices, scrolling shall be enabled and “MORE BELOW” or “MORE ABOVE” will be displayed.

Enter the defined SPHEROID, PRESS the SELECT softkey and the SELECT DATUM menu will be displayed. Refer to PDFCS/FDC Spheroid and Datum table in Appendix J.1 for SPHEROID listings.

Softkey SEQUENCING SHALL BE AS FOLLOWS:

1. If USRDEF is boxed in and SELECTED then the ENTER USER DEFINED SPHEROID MAJOR AXIS menu will be displayed.

2. If any other SPHEROID is SELECTED then the SELECT DATUM menu will be displayed to force SELECTION of the DATUM.

3. If CANCEL, then the SPHEROID/DATUM ENTRY menu will be displayed.

Maps are based upon a “reference datum”. This is really the model of the Earth that the cartographer uses when making a map. The reference datum consists of two parts, the spheroids and the datum offsets.

The Earth is really not a perfectly round globe but is a little “fatter” at the equator. Therefore, the mapmaker uses a spheroid rather than a globe to describe the Earth’s shape. Instead of just using one radius as one would do to describe a globe, two values are used. The first is the semi-major axis. It is the radius of the Earth at the equator. The second number is the semi-minor axis. It is the distance from the center of the Earth to the poles. It is slightly smaller than the semi-major axis. (The WGS 84 model of the Earth uses a semi-major axis of 6,378,137 meters and 6,356,752 meters for the semi-minor axis).

The cartographer may choose to base his model of the Earth’s surface using a center point that is different from the true center of the Earth. This offset of the center point is described by three “datum offset” values: delta X, delta Y, and delta Z. These values are typically a few hundred meters.

There are many standard spheroid and datums commonly used for maps. If the spheroid/datum is not supplied by a message from FDC, the PDFCS operator will be told to select a certain spheroid and datum at the display unit. The starting point for entering this data is the SPHEROID/DATUM ENTRY display.

The spheroid is selected using the SELECT SPHEROID sub-display. This display lists choices. It is possible to use spheroid values different from the ones in the display lists. The different values are entered as “user defined”. This is selected by the USRDEF option listed as a choice for a spheroid. If the operator selects USRDEF, other sub-displays prompt him to enter the semi-major and semi-minor axis. These values must be obtained from the POC and should only be used with guidance from Battery Commander.

# O-6 PDFCS INITIALIZATION - CONTINUED

## O-6.2 Initializing - Continued

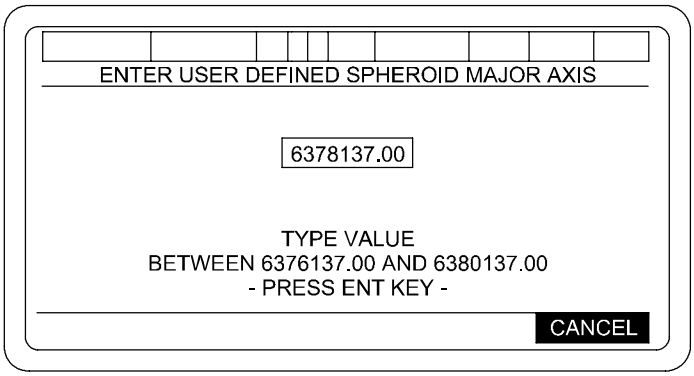


06pc252td

1. An unedited DATA fields remain at their current values when ENT is pressed.

2. Enter the appropriate value and press ENT key. The USER DEFINED SPHEROID MINOR AXIS menu will be displayed.

3. If the CANCEL key is selected the SELECT SPHEROID menu will be displayed.

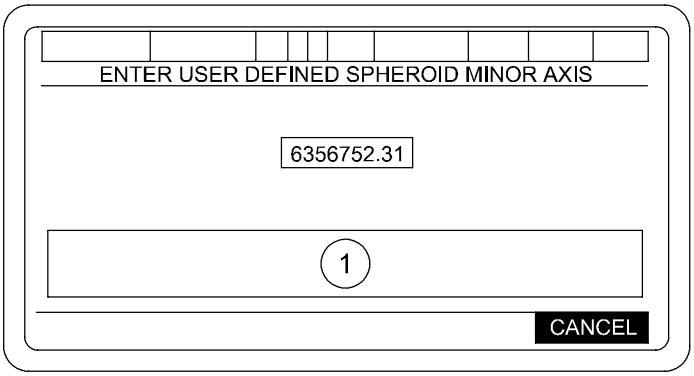


06pc252tf

(1) TYPE VALUE
BETWEEN XXXXXXX.XX AND YYYYYYY.YY
PRESS ENT KEY

Where XXXXXXX.XX and YYYYYYY.YY are the minimum and maximum allowable values for the semi-minor axis, which will appear after entry into this screen.

# O-6 PDFCS INITIALIZATION - CONTINUED

## O-6.2 Initializing - Continued

1. An unedited DATA fields remain at their current values when ENT is pressed.

2. Enter the appropriate value and press ENT key. The CONFIRM USER DEFINED SPHERIOD AXIS menu will be displayed.

3. If the CANCEL key is selected the ENTER USER DEFINED SPHEROID MAJOR AXIS menu will be displayed.

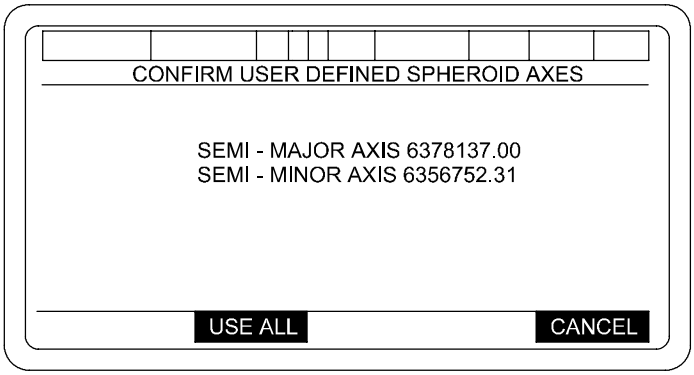


06pc252te

Softkey sequencing shall be as follows:

If **CANCEL**, then ENTER USER DEFINED SPHERIOD MINOR AXIS menu will be displayed.

If **USE ALL**, then the SELECT DATUM menu will be displayed.

The datum offset is selected using the SELECT DATUM sub-display. This display lists valid choices listed by an alphabetical code. It is possible to use datum offset values different from the ones in the display lists. The different values are entered as “user defined”. This is selected by the USRDEF option listed as a choice for datum offset. The datum offset values are entered using the ENTER USER DATUM PARAMETERS sub-display. The offset values are listed as DATUM OFFSET X, Y, and Z.

There is a restriction on the use of user defined spheroid and datum. The operator cannot use a new user defined spheroid if current spheroid selection is user defined. Likewise, the operator cannot select a new user defined datum selection if the current datum selection is user defined. If the operator wants to go from a user defined datum to a new user defined datum, the operator should simply select any standard datum and then enter the new user defined. Likewise, if the operator wants to go from a user defined spheroid to a new user defined spheroid, the operator should simply select any standard spheroid and then enter the new user defined.

# O-6 PDFCS INITIALIZATION - CONTINUED

## O-6.2 Initializing - Continued

When DATUM is selected, SELECT DATUM menu is displayed:

**NOTE**

The DATUMS available are dependant on the SPHEROID selected.

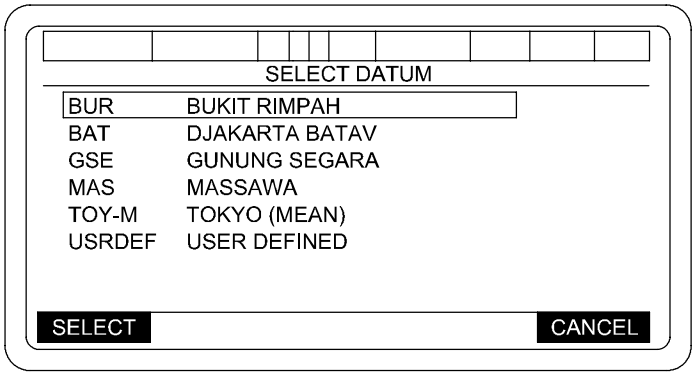


06pc253ta

If CANCEL then the ENTER SPHEROID/DATUM ENTRY will be displayed.

When more than one page is required to display choices, scrolling shall be enabled and “MORE BELOW” or “MORE ABOVE” will be displayed.

Box in the correct DATUM and press the SELECT key. The DATUMs available are dependent on the SPHEROID selected. See PDFCS/FDC Spheroid and Datum table in appendix J.1.

**NOTE**

- The reference frame for UTM position coordinates is a DATUM. Typically, a local DATUM is defined by an ellipsoidal Earth model (SPHEROID) and a starting point (origin) for the coordinate system. Coordinates on a map or in a Trig list (SCPs) often are on a Local DATUM. An example of a Local DATUM is the North American 1927 (NAD 27) DATUM used in the United States.
- There have been many different Local DATUMs developed. GPS computes position on the World Geodetic System 1984 (WGS 84), a worldwide coordinate system. To use GPS with coordinates on a Local DATUM, the coordinates must be mathematically shifted. The PDFCS (DRUH and DAGR) can automatically perform DATUM shifting, but first the operator must select the Local DATUM to be used, or provide the appropriate shift parameters. For PDFCS operation, Local DATUMs are represented by two sets of parameters: the Local Ellipsoid (SPHEROID) and shift parameters as defined for each Local DATUM (DATUM IDs).

# O-6 PDFCS INITIALIZATION - CONTINUED

## O-6.2 Initializing - Continued

### NOTE - Continued

- The FDC can provide the SPHEROID. The SPHEROID selected will determine which DATUM IDs will be available for selection. The PDFCS/FDC SPHEROID and DATUM TABLE provides the SPHEROID number for the PDFCS and FDC, which DATUM IDs are available for that SPHEROID number and the normal coverage area. Note that there may be more than one DATUM ID associated with a Local DATUM because the shifts vary by locality. For other DATUMs or areas outside the indicated coverage area, User Defined (USRDEF) Datum shifts may be entered manually. The table is not intended as an absolute. A map sheet will identify the DATUM name, Ellipsoid (SPHEROID) name and the coordinate type, or the map sheet will identify the area. The data from a Trig list should identify the same information. These parameters must be correlated to the DATUM ID. If the applicable DATUM hasn't been programmed in the PDFCS, shift parameters for many other DATUMs and regions have been published in DMA TR 8350.2 and may be entered thru the DATUM X, Y, and Z OFFSETs. Note that the PDFCS cannot accept shift parameters for all DATUMs because its SPHEROID capability is limited to those listed in the PDFCS/FDC Spheroid and Datum table in appendix J.1.

If the DATUM USRDEF is selected, then the DATUM X, Y, and Z offsets must be entered. These values must be obtained from the POC and should only be used with guidance from Battery Commander.

The ENTER USER DATUM PARAMETERS page should look like:

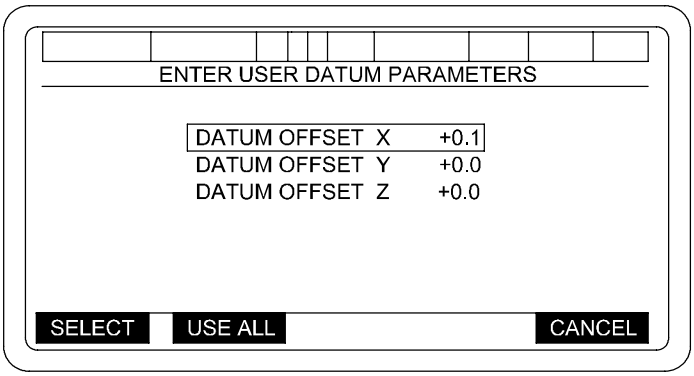


06pc254ta

- When field selected:
  TYPE OFFSET
  BETWEEN -2000.0 AND +2000.0
  -PRESS ENT KEY-
- When field selected: + / -
  Otherwise: USE ALL
- When no fields are selected: SELECT
  Otheriwse: BLANK

# O-6 PDFCS INITIALIZATION - CONTINUED

## O-6.2 Initializing - Continued

**NOTE**

Any un-edited DATA fields remain at their current values when USE ALL key is pressed.

Softkey sequencing shall be as follows:

If CANCEL, then the SELECT DATUM menu will be displayed.

If USE ALL, then the ENTER SPHEROID/DATUM ENTRY menu will be displayed.

If CANCEL is selected, all information up to this point will be deleted.

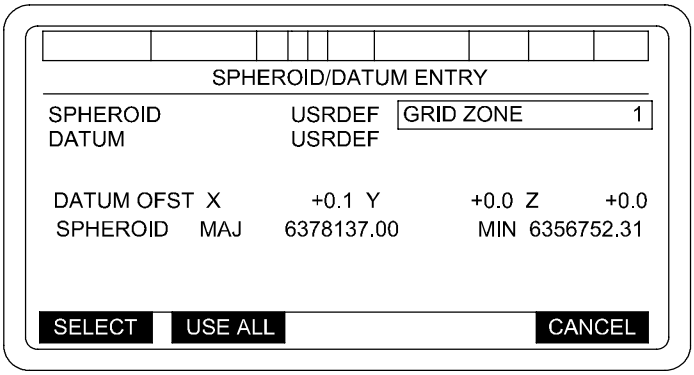


06pc270ta

If USE ALL is selected, all information will be locked in and the SETUP AND INFORMATION MENU will be displayed.

# O-6 PDFCS INITIALIZATION - CONTINUED

## O-6.2 Initializing - Continued

(4) NAV UPDATE – Navigation Subsystem Update is performed as follows:

(a) With the Gun Tube in Travel Lock, park the howitzer at a known Survey Control Point (SCP) with the left sprocket within one meter of SCP.

(b) Box in *NAV UPDATE and press the SELECT softkey. This will bring up the NAVIGATION SUBSYSTEM UPDATE menu.

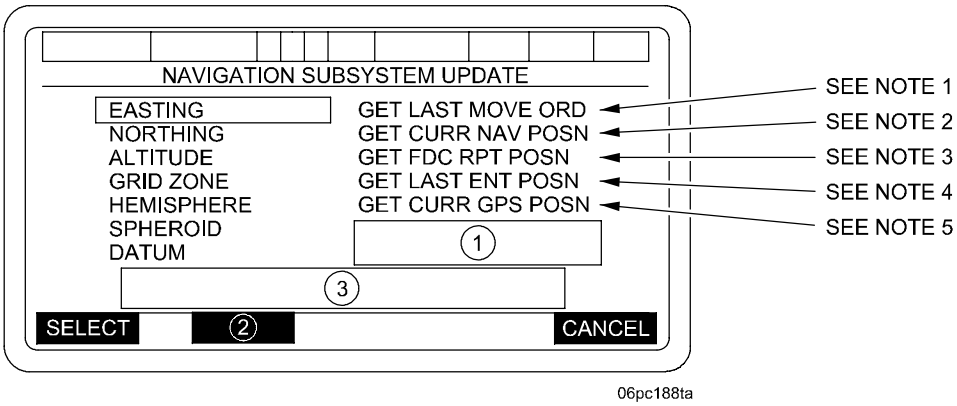


**NOTE**

The datum to be used is selected from the SETUP AND INFORMATION menu (Enter MAP/DATUM menu)

(1) This field contains OPERATOR PROMPTS and selections which depend on the current status of the NAVIGATION SUBSYSTEM

(2) When ALTITUDE SELECTED – **+/-**

otherwise – **USE ALL**

(3) This field contains OPERATOR PROMPTS for updating the values of: EASTING, NORTHING, ALTITUDE, and GRID ZONE:

When EASTING is selected:
Type EASTING 1 to 999999
Press ENT key

When NORTHING is selected:
Type NORTHING 0 to 9999999
Press ENT key

When ALTITUDE is selected:
Type ALTITUDE –400 to 9999
Press ENT key

When GRID ZONE is selected:
Type GRID ZONE XX, YY, or ZZ
Press ENT key

Where XX, YY and ZZ are dependent on the Grid Zone (GZ) previously entered on the SPHERIOD/DATUM display. XX identifies the GZ to the west of the entered GZ, YY is equal to the entered GZ and ZZ identifies the GZ to the east of the entered GZ.

HEMISPHERE = NORTH or SOUTH
SPHEROID = 1 . . 9 and A . . I and USRDEF (not modifiable by operator)
DATUM = See PDFCS/FDC Spheroid and Datum table in appendix J.1 (not modifiable by operator on this display).

# O-6 PDFCS INITIALIZATION - CONTINUED

## O-6.2 Initializing - Continued

NOTE 1: Blank if no Move Order occurred since the last power up of the PDFCS.

NOTE 2: Blank when Navigation Subsystem is not available.

NOTE 3: Available if position data has been sent from the FDC. Selection disappears when PDFCS operator performs Nav Update or Move Order.

NOTE 4: Last coordinates on which position update was performed. Blank if operator has pressed the ARRIVED key at a position area since the last position update.

NOTE 5: Field is blank when the following conditions exist:

a. Navigation subsystem functionality not currently available.

b. GPS position data not currently available from the Navigation subsystem.

c. The GPS position data currently available has an estimated probable error greater than the navigation devices' "poor GPS data limit".

If the available GPS data has an estimated probable error greater than the Navigation device "Good GPS data limit", but less than or equal to the navigation device "Poor GPS data limit" when this menu item is selected, then the following alert will be placed on the softkey line:

USE DGRD GPS DATA? YES NO

If the YES softkey is pressed, then the available GPS data shall be used to update the listing, Northing, and Altitude fields on the menu. If the NO softkey is pressed, then the Easting, Northing, and Altitude fields on the menu will not be updated with the available GPS data.

(c) Operator warning/alerts - When USE ALL is selected and the coordinate data entered does not correlate with the other data the following messages will be displayed:

1. "POSITION COORDINATES INVALID" and "RE-ENTER VALUE ACK" when the local UTM coordinate does not transform to WGS 84.

2. "NORTHING VALUE NOT VALID" and "RE-ENTER VALUE ACK" when the entered Northing coordinate is invalid when correlated with other entered data.

3. "EXCEEDED 84N OR - 80S LATITUDE" and "RE-ENTER VALUE ACK" when the latitude does not correlate with the local UTM to WGS 84 transformation.

If the operator attempts to enter a position that is more than one grid zone away, then the AFCS will revert to the default value of 50000 E and 0 N in the current gridzone with no warnings.

If operator selects GET LAST ENT POSN on the NAV UPDATE screen, AFCS will display the last data that was entered when operator selected USE ALL while conducting a position update. The AFCS will suppress the GET LAST ENT POSN entry once the Paladin moves and arrives at a new location (INT, LOG, FIRE PT, or FIRE AREA).

# O-6 PDFCS INITIALIZATION - CONTINUED

## O-6.2 Initializing - Continued

**NOTE**

Perform the following steps in accordance with unit SOP.

(d) RESTART REQUIRED – This prompt will appear in field (1). With the gun tube in travel lock, the Howitzer must be positioned at a Survey Control Point (SCP) with the left front sprocket within one meter on the SCP. No selection of RESTART REQUIRED is required, it will happen automatically and a full alignment will be performed. Enter the SCP data of EASTING, NORTHING ALTITUDE and GRID ZONE. When all data is entered, double check the SCP coordinates and SPHEROID/DATUM, and HEMISPHERE displayed on the screen. If it is not correct, make any correction. If it is correct, press the USE ALL softkey. The following prompt will be displayed:

"NAV POSITION UPDATE ABOUT TO START" "ARE YOU SURE" "YES" "NO"

Press the YES softkey, and the Navigation Position Update will be started. The SETUP AND INFORMATION menu will appear. The prompt "CMD" will appear in field (6), and then be replaced by the Align Time to Go countdown. Proceed with the rest of Initialization.

(e) NAV POSITION UPDATE – If this prompt is displayed in field (1), then only a Navigation Subsystem Position Update is required. With the gun tube in travel lock, the Howitzer must be positioned at a Survey Control Point (SCP), with the left front sprocket within one meter of the SCP. Enter the SCP data of EASTING, NORTHING and ALTITUDE. When all data is entered, double check the SCP coordinates and SPHEROID/DATUM, GRID ZONE and HEMISPHERE displayed on the screen. If it is not correct, make any correction. If it is correct, press the USE ALL softkey. The following prompt will be displayed:

"NAV POSITION UPDATE ABOUT TO START" "ARE YOU SURE" "YES" "NO"

Press the YES softkey, and the Navigation Position Update will be started. The SETUP AND INFORMATION menu will appear. The prompt "CMD" will appear in field (6), and then be replaced by the Align Time to Go countdown. Proceed with the rest of Initialization.

(f) NAV RESTART – If the prompt NAV POSITION UPDATE is highlighted and selected, a message prompt "CHANGE TO RESTART" "YES" "NO" will appear. Press the YES softkey. "FORCE NAV RESTART" will appear. Press USE ALL then press the YES softkey to "ARE YOU SURE" prompt, the SETUP AND INFORMATION menu will be displayed and CMD will be displayed in field (6). This will be replaced with the Align Time to Go count down timer. The Navigation Subsystem aligns itself automatically.

# O-6 PDFCS INITIALIZATION - CONTINUED

## O-6.2 Initializing - Continued

### NOTE

The Navigation Subsystem has 3 modes of alignment; Stored Heading Alignment, Normal Alignment and Dynamic Alignment.

(1) Stored Heading Alignment – Will occur only if the previous PDFCS shutdown was orderly and the Howitzer or Turret has not moved since the last shutdown. This Alignment will take a maximum of 90 seconds, and will start as soon as the power is applied to the Navigation Subsystem. A NAV UPDATE is still required. But since the Howitzer has not moved since the last shutdown, all the NAV UPDATE data should be correct and only pressing the USE ALL softkey is required. If the Howitzer has been moved since the last shutdown, or the last shutdown was abnormal, or the Howitzer was moving during the last shutdown procedure, the Stored Heading Alignment will automatically be rejected and after a NAV UPDATE is performed the Navigation Subsystem will automatically perform a Normal Align.

(2) Normal Alignment – Will occur when ever a Stored Heading Alignment cannot be performed. This alignment will take a maximum of 15 minutes (900 seconds). After the NAV UPDATE is performed and accepted, the Normal Alignment will automatically start, and the Align Time to Go counter will start counting down to 0. During the countdown, a message “OK TO MOVE OR SHOOT” “ACK” may appear before the countdown reaches 0. This means the Navigation Subsystem estimated Azimuth Error is within the bounds that are safe to move or shoot. At this point, a Move Order or Fire Missions may be performed. If the DAGR data is valid (i.e. the “A” is gone) the Align Time to Go counter will continue to countdown while the Howitzer is moving. If the DAGR is not valid (i.e. “A” is on), the timer will stop counting during movement and ZUPTs will be requested.

(3) Dynamic Alignment – A Dynamic Alignment is nothing more than a moving Normal Alignment, but the following conditions must be met: The DAGR must have data (i.e. the “A” is gone) and a NAV UPDATE must have been performed prior to movement. If these conditions are true, then the Howitzer may be moved before the “OK TO MOVE OR SHOOT” “ACK” is displayed. Move Orders and Fire Missions cannot be performed, but as long as the DAGR is valid (i.e. the “A” is gone), the Align Time to Go timer will continue to countdown and the Navigation Subsystem will not require a RESTART. Moving prior to the “OK TO MOVE OR SHOOT” “ACK” must be done in accordance with Unit SOP.

# O-6 PDFCS INITIALIZATION - CONTINUED

## O-6.2 Initializing - Continued

### NOTE

PDFCS supports two modes of Navigation Update; a Position Update and a Navigation Subsystem Restart. Normally, the Navigation Subsystem will align itself automatically, so only a Position Update is required.

(g) To perform a NAV Position Update, if entries are correct per unit SOP. If incorrect, this indicates that FDC DATA Transfer of the Map Mod was not successful in the previous step; press CANCEL, to return to the SETUP AND INFORMATION menu and repeat the FDC DATA XFER procedure to get initialized by FDC. If GRID ZONE, HEMISPHERE and SPHEROID entries are correct, then enter, in turn, EASTING, NORTHING, and ALTITUDE as follows: for each item, first box in the item, then press SELECT key. Use PDFCS keypad to type in value. Press ENT key. Press USE ALL to complete the NAV UPDATE and return to the SETUP AND INFORMATION menu.

If invalid data is entered, the Navigational System will reject it and ask for data re-entry. Press ACK key to acknowledge Alert and re-enter data.

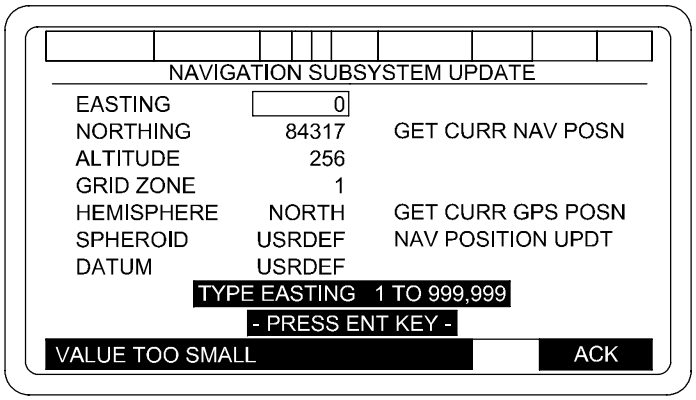


06pc324ta

# O-6 PDFCS INITIALIZATION - CONTINUED

## O-6.2 Initializing - Continued

(5) AMMO INVENTORY – Ammunition inventory must be done before the PDFCS will accept a fire mission. Inventories must be complete and accurate before the system initialization is completed. The three parts of the inventory records, Shells, Propellants, and Fuzes, are updated as follows:

(a) Box in AMMO INVENTORY from the SETUP AND INFORMATION menu. Then press SELECT key. This will cause an INVENTORY MANAGEMENT menu to be displayed. Box in either EDIT CURRENT PALADIN or EDIT FDC PROVIDED data. Press SELECT key. This will cause an INVENTORY MANAGEMENT menu to be displayed.

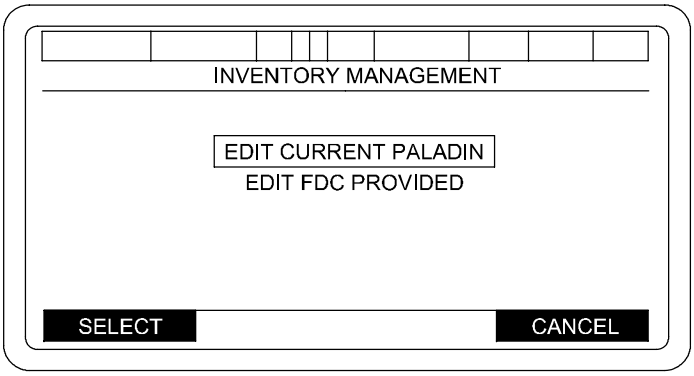


06pc654ma

**NOTE**

- This menu will not be displayed when FDC provided Inventory Data is not available at the PDFCS.
- You can request the POC to provide your Ammo Inventory from the FDC if you know it is a correct count. Use FDC DATA XFER to GET AMMO STATUS (para O-6.2.l(2)).

# O-6 PDFCS INITIALIZATION - CONTINUED

## O-6.2 Initializing - Continued

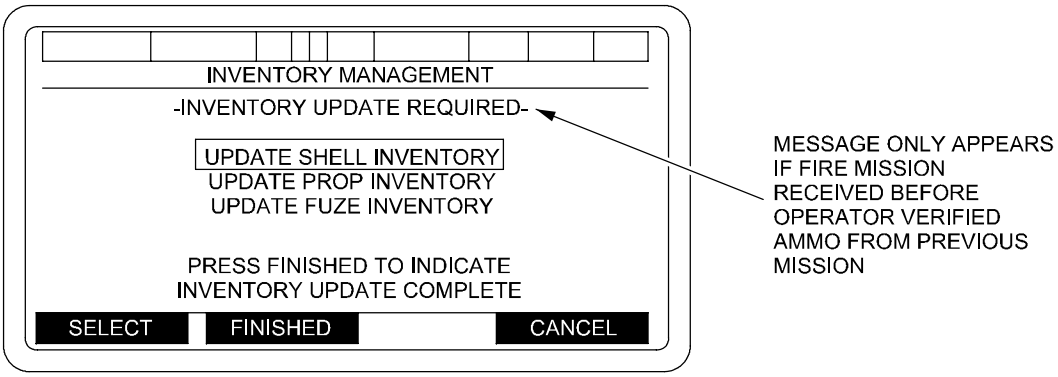


06pc118mb

### NOTE

If a Fire Mission is activated while in the UPDATE FUZE INVENTORY submenus, all valid complete entries with consistent Fuze country code matches will be saved. The Paladin will save complete projectile/propellant entries when the FINISHED softkey is pressed.

FINISHED = When the FINISHED key is pressed the ammunition inventory shall be reviewed to insure each group of projectiles has at least one propellant and each group of propellants has at least one projectile. If a projectile is found without a propellant or a propellant without a projectile, the PDFCS will display PROJECTILE/PROPELLANT MISMATCH menu.

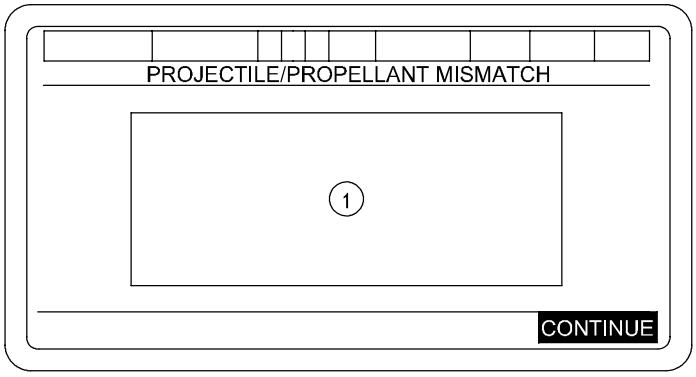


06pc189ta

CONTINUE = Will display INVENTORY MANAGEMENT menu.

(1) = NO ** PROJECTILE and or NO ** PROPELLANT MATCH for each country.
** = BE, CA, DA, FR, GE, IT, NL, NO, PO, SP, US or UK

### NOTE

Use Up and DOWN keys to scroll.

(b) Box in UPDATE SHELL INVENTORY. Press SELECT key. This will cause an UPDATE SHELL INVENTORY menu to be displayed.

# O-6 PDFCS INITIALIZATION - CONTINUED

## O-6.2 Initializing - Continued

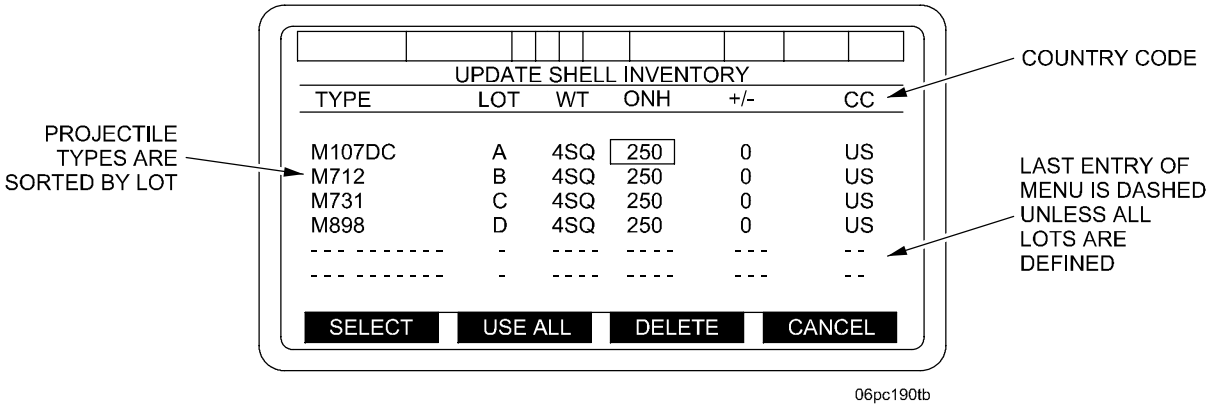


### NOTE

- When USE ALL key is selected to update inventory, it will automatically forward to the INVENTORY MANAGEMENT screen.
- Pressing the DELETE key will cause the selected shell to be deleted from inventory no matter where on the inventory line the selection box is positioned.
- If the operator presses the DELETE key or attempts to modify the lot for a shell that is currently being used for a fire mission, the operator warning “UNALLOWED - BEING USED BY FM” “ACK” will be displayed.

(c) To add a new entry, box in the first blank line. Press SELECT key. This will cause an UPDATE SHELL INVENTORY-SELECT SHELL TYPE menu to be displayed.

### NOTE

When more than one page is required to display choices, MORE BELOW and/or MORE above may be used to navigate between screens.

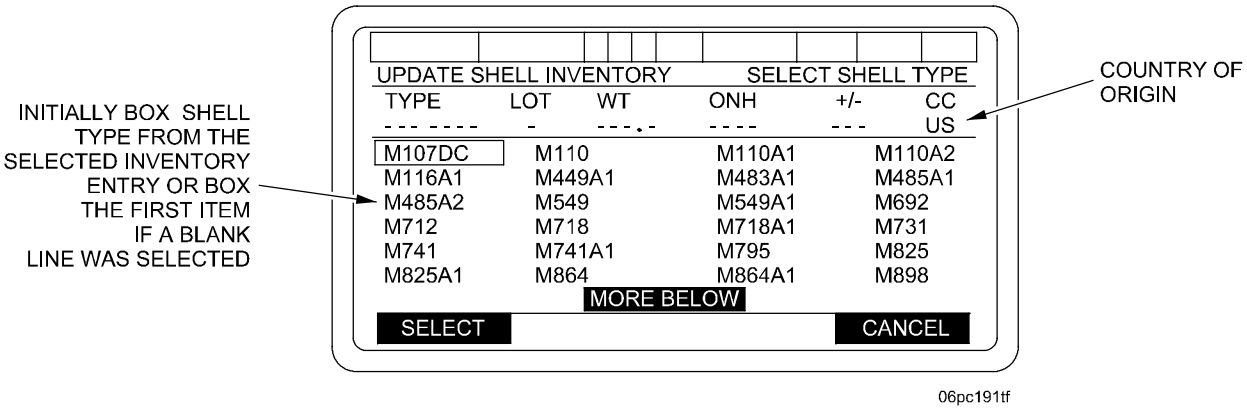

# O-6 PDFCS INITIALIZATION - CONTINUED

## O-6.2 Initializing - Continued

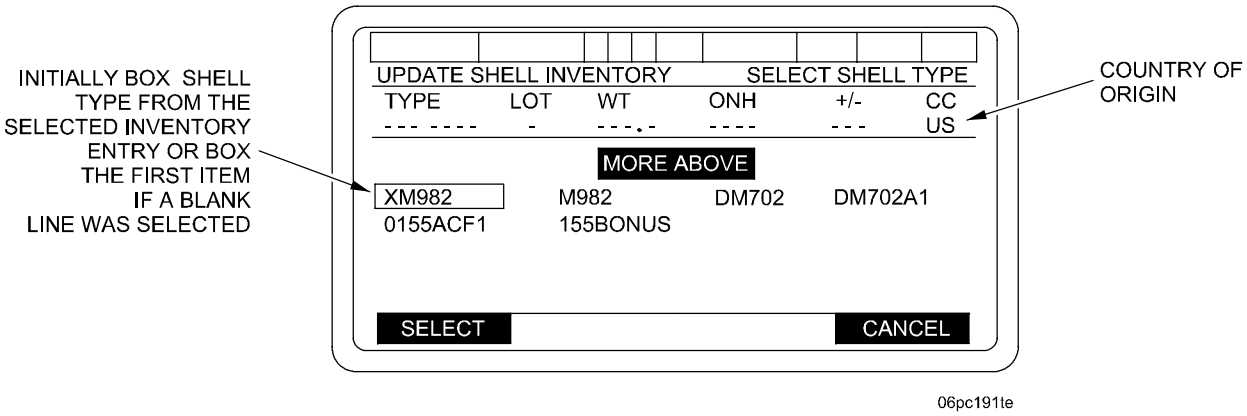


(d) Press SELECT key to display a SELECT LOT menu.

(e) Box in Lot choice and press SELECT key. This will cause a lot designator to be assigned to the selected shell. Once a lot selection is made, that designator (letter) will disappear. This prevents using same lot twice.

# O-6 PDFCS INITIALIZATION - CONTINUED

## O-6.2 Initializing - Continued

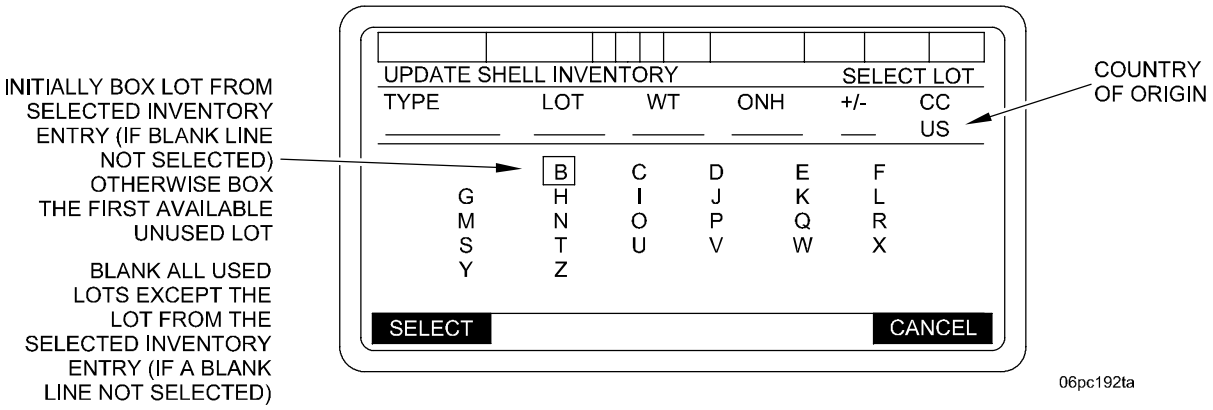


**NOTE**

Weight will be displayed in pounds or squares.

(f) Box in WT choice and press SELECT key; an ENTER SHELL WEIGHT menu will be displayed. If shell weight is not the same as default weight, type in new weight and press ENT key. This will cause the UPDATE SHELL INVENTORY menu to be displayed.

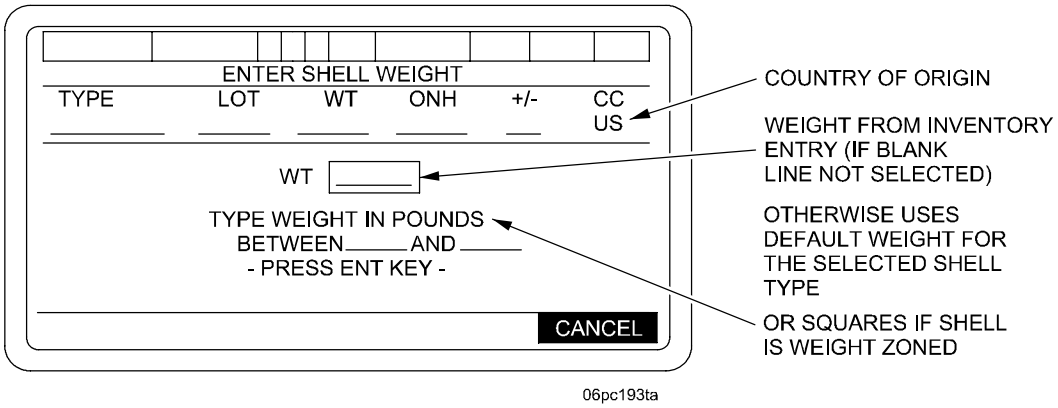


(g) Move box to proper column (ONH, ADD or SUB) in desired line and press SELECT key. A prompt to TYPE SHELL QUANTITY will be displayed. Type in new quantity and press ENT key. New quantity will be displayed.

(h) When all shell data has been updated or edited, press USE ALL key to return to INVENTORY MANAGEMENT menu.

# O-6 PDFCS INITIALIZATION - CONTINUED

## O-6.2 Initializing - Continued

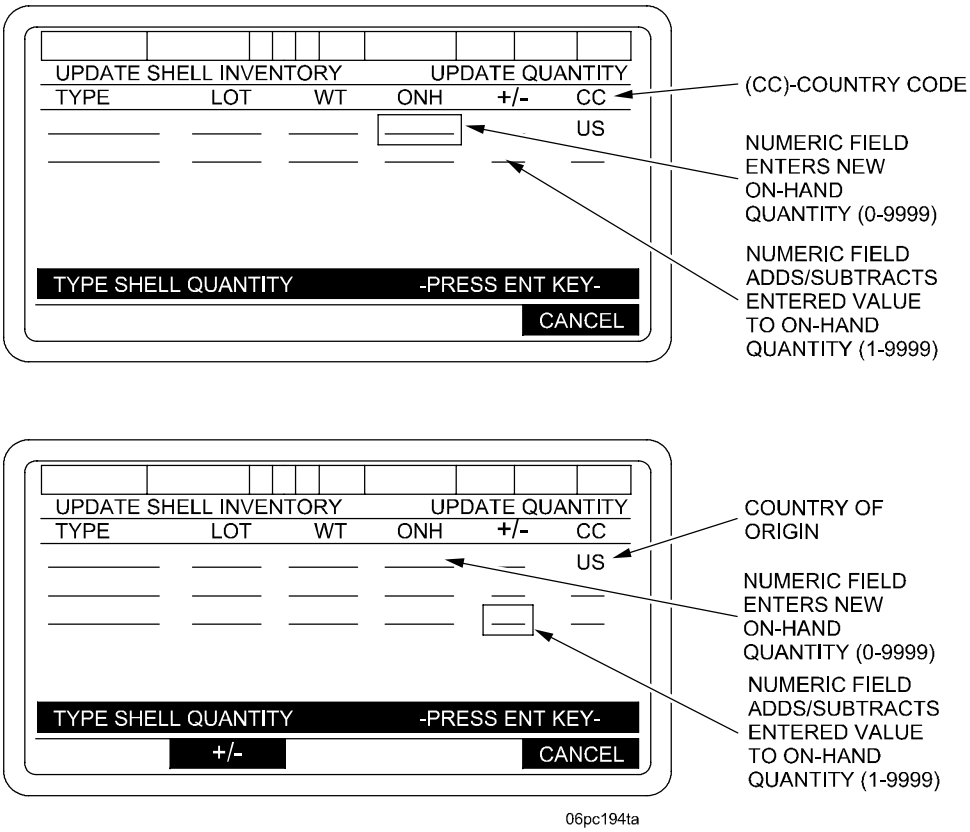


**NOTE**

- The +/- softkey will appear when the +/- column is selected. If you select the ONH column, the +/- softkey will not appear.
- Minus values must not exceed the amount on-hand. Plus values must not cause the on-hand total to exceed 9999. Either of these conditions shall cause the error message: “VALUE TOO SMALL” “ACK” or “VALUE TOO BIG” “ACK”.

# O-6 PDFCS INITIALIZATION - CONTINUED

## O-6.2 Initializing - Continued

(i) Box in UPDATE PROP INVENTORY on INVENTORY MANAGEMENT (UPDATE) menu. Press SELECT key to display UPDATE PROP INVENTORY menu.

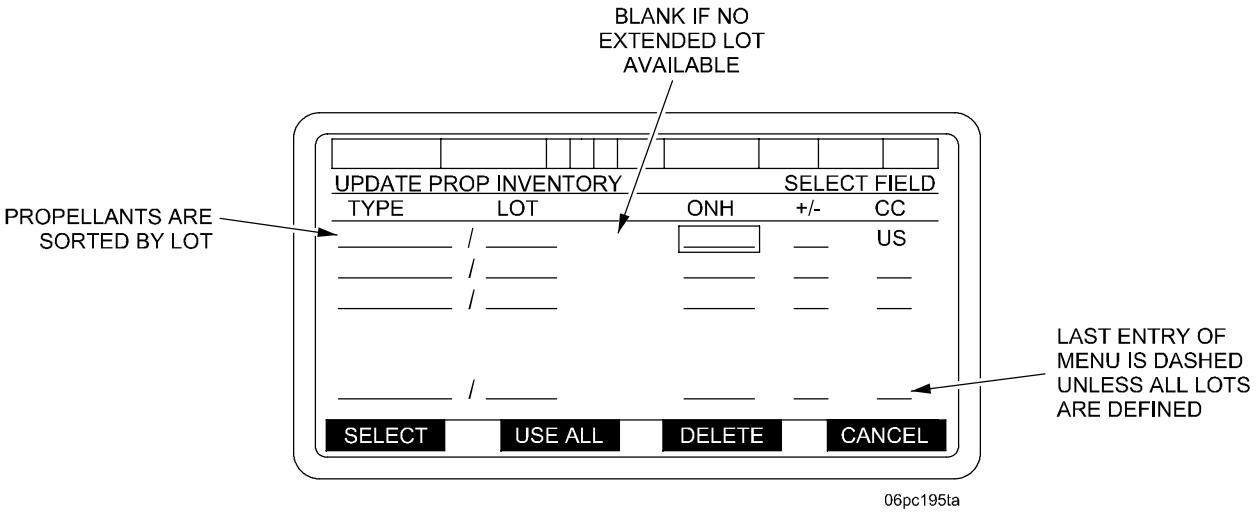


### NOTE

- The DELETE key shall cause the selected propellant to be deleted from inventory no matter where on the inventory line the selection box is positioned.
- If the operator presses the DELETE key or attempts to modify the lot for a propellant that is currently being used for a fire mission, the PDFCS shall display the operator warning "UNALLOWED - BEING USED BY FM" "ACK".

(j) To add a new entry, box in the first blank line on UPDATE PROP INVENTORY menu. Press SELECT key to display SELECT PROP TYPE menu. Box in propellant type and press SELECT key.

### NOTE

The data displayed on the third line of this display is that given in the selected inventory entry (either a blank line or an existing entry) and is updated as entries are made.

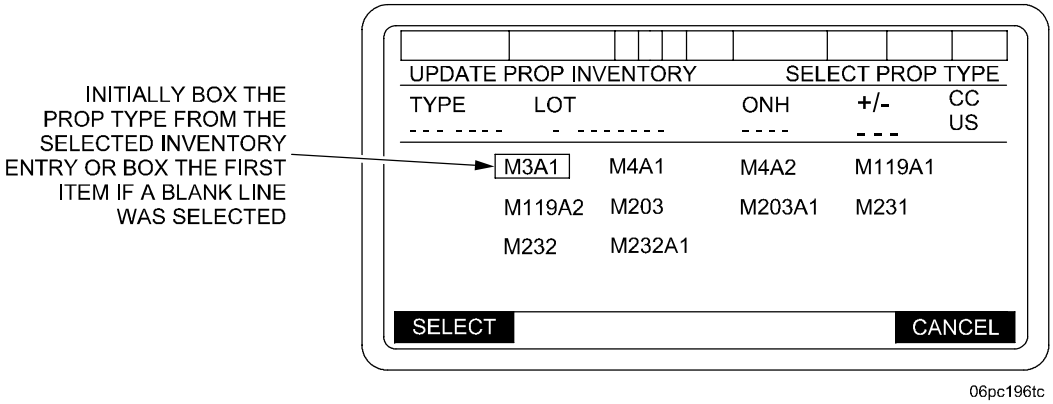

# O-6 PDFCS INITIALIZATION - CONTINUED

## O-6.2 Initializing - Continued

(k) When the SELECT key on the SELECT PROP TYPE screen is pressed the UPDATE PROP INVENTORY - ENTER LOT menu will be displayed.

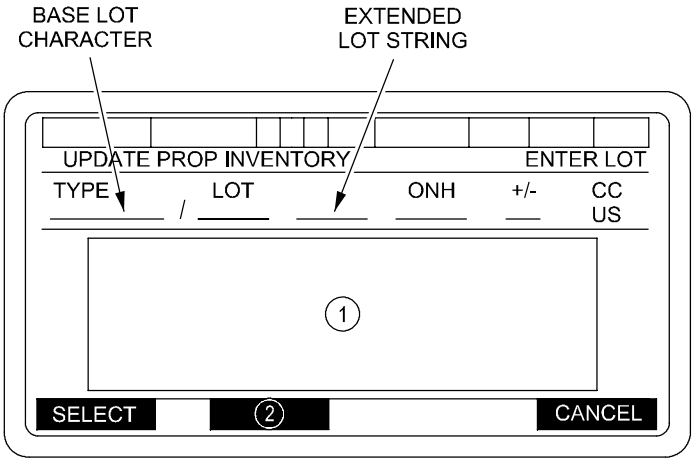


06pc197ta

(1) On initial entry to this display, the cursor box is on the base lot from the selected inventory entry (if a blank line was not selected). Otherwise, box the first available unused base lot letter. The base lot location in the upper display is highlighted in reverse video. All base lots currently in the propellant inventory are deleted from the selection area (except for the selected inventory entry base lot if not on a blank inventory line).

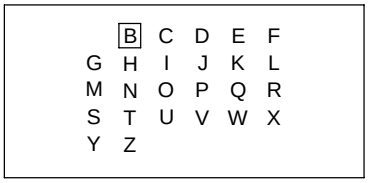


06pc127m

# O-6 PDFCS INITIALIZATION - CONTINUED

## O-6.2 Initializing - Continued

After the base lot is selected, the extended lot editing function is entered. All alphabetic characters as well as numeric, virgule, hyphen, and highlight movement characters are made available for operator selection. The operator will be allowed to enter blanks while editing the extended lot string, but they will be removed when the operator selects USE ALL. The reverse video highlight is initially moved to the first character position (left most character) in the extended lot string. Highlight movement will wrap at the ends of the extended lot string. Pressing the CANCEL key will erase the character under the reverse video highlight. If CANCEL key is pressed while the USE ALL selection is not present, PDFCS will clear the propellant type/model selected and display a blank UPDATE PROP INVENTORY - ENTER LOT screen.

(2) Blank - until extended lot string editing begins.
USE ALL - while editing the extended lot string.

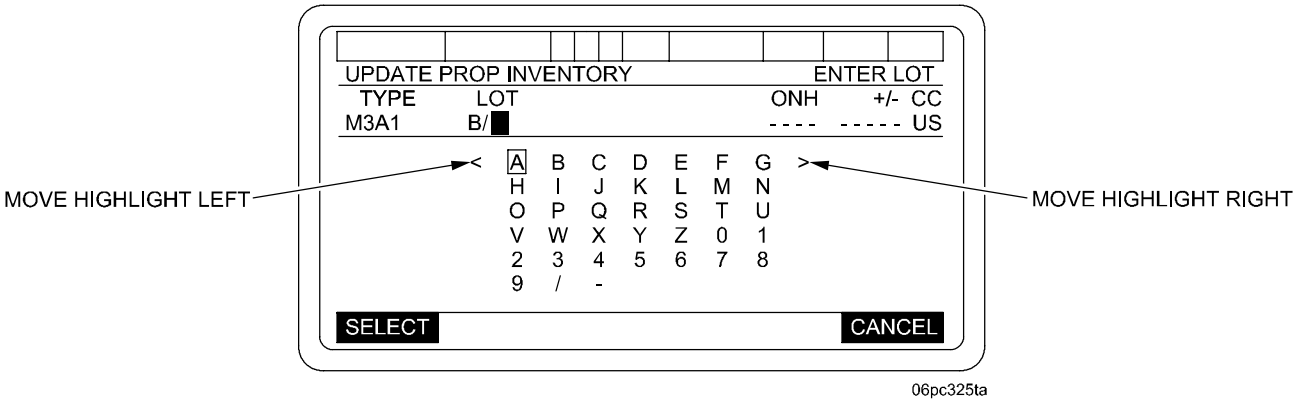


When USE ALL key is pressed the following checks occur:

- The extended string is compared with other extended lot codes in inventory. If a duplicate extended lot string is found, a short error message will be displayed.

  DUPLICATE EXTENDED LOT FOUND | ACK

  When ACK is pressed, the extended lot editing function will be resumed and the highlight will be at the last character position prior to pressing USE ALL. Before pressing USE ALL, enter a different extended lot.

- The extended lot string is compared with other extended codes in the MVV Lot Database. If a duplicate extended lot string is found and there is a propellant model mismatch, the error message shall be generated.

  MVV EXTENDED LOT CONFLICT | ACK

  When ACK is pressed, the extended lot editing function shall be resumed and the highlight shall be at the last character position prior to pressing USE ALL.

# O-6 PDFCS INITIALIZATION - CONTINUED

## O-6.2 Initializing - Continued

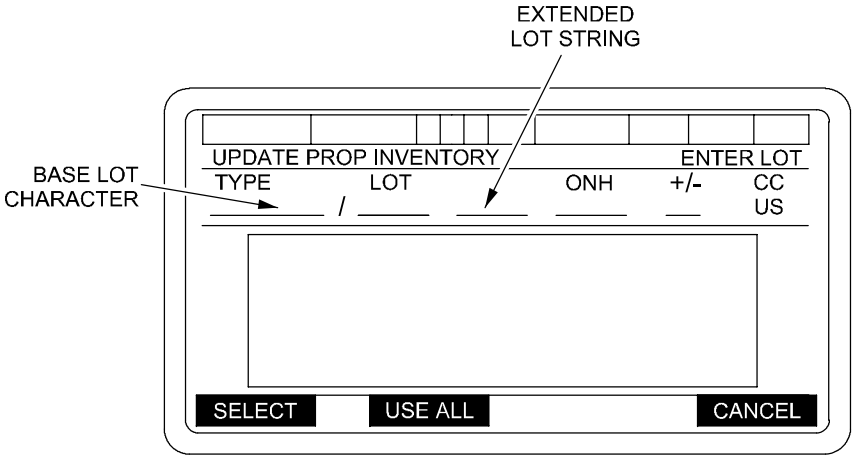


06pc198ta

(l) When the USE ALL key is pressed, the UPDATE PROP INVENTORY-UPDATE QUANTITY menu is displayed. Box in either +/- column and press SELECT key. Type in new quantity and press ENTER key. New quantity will be displayed.

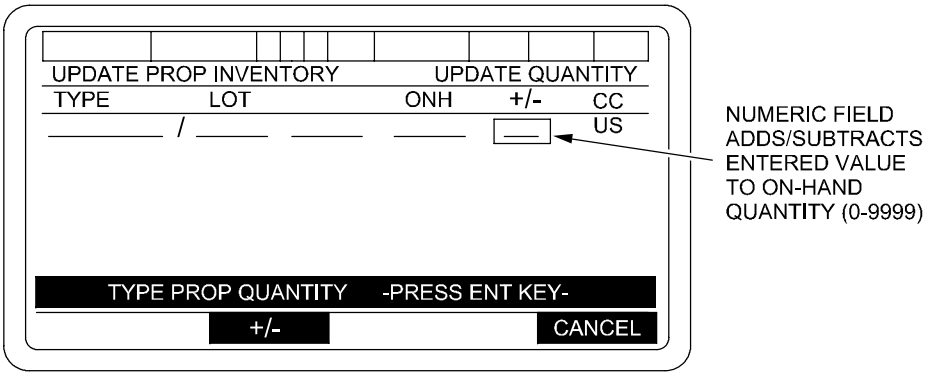


06pc199ta

**NOTE**

- The +/- softkey will appear when the +/- column is selected. If you select the ONH column, the +/- softkey will not appear.
- Minus values must not exceed the amount on-hand. Plus values must not cause the on-hand total to exceed 9999. Either of these conditions shall cause the error message: "VALUE TO SMALL" "ACK" or "VALUE TOO BIG" "ACK".

(m) When propellant types have been updated or edited, press USE ALL key. This will cause the INVENTORY MANAGEMENT menu to be displayed.

# O-6 PDFCS INITIALIZATION - CONTINUED

## O-6.2 Initializing - Continued

(n) Box in UPDATE FUZE INVENTORY on INVENTORY MANAGEMENT menu. Press SELECT key to display UPDATE FUZE INVENTORY - SELECT FIELD menu. To add a new entry, move box to the first blank line. Press SELECT key. A SELECT FUZE TYPE menu will be displayed.

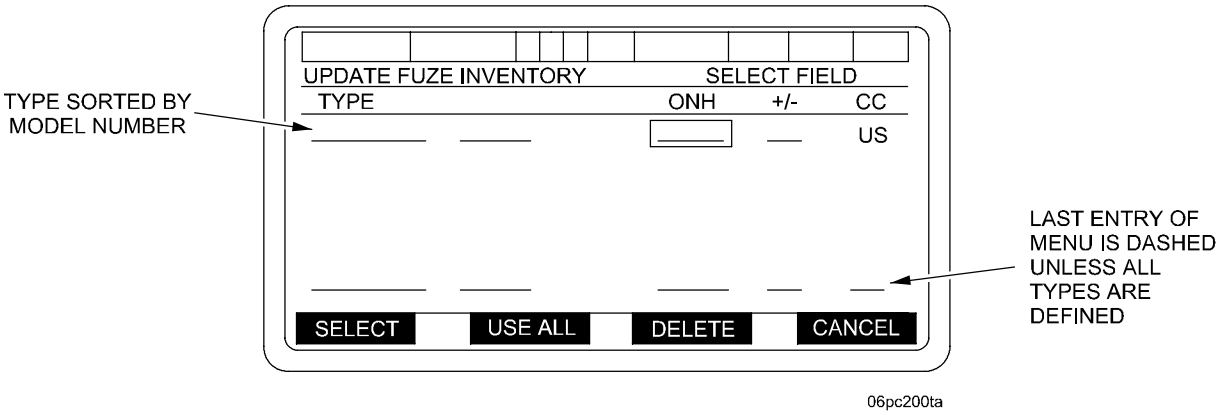


### NOTE

- The DELETE key will cause the selected fuze to be deleted from inventory no matter where on the inventory line the selection box is positioned.
- If the operator presses the DELETE softkey or attempts to modify the fuze model that is currently being used for a fire mission, the PDFCS shall display the operator warning "UNALLOWED - BEING USED BY FM" "ACK".

(o) Box in FUZE TYPE and press SELECT key.

### NOTE

The data displayed on the third line of this display is that given in the selected inventory entry (either a blank line or an existing entry) and is updated as entries are made.

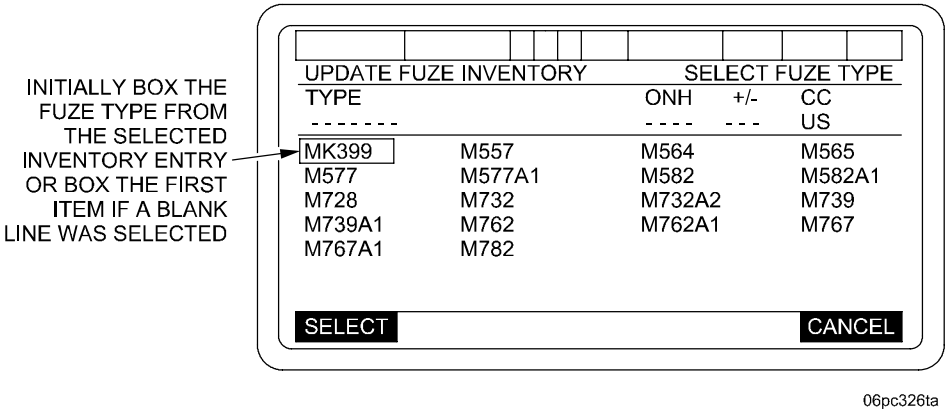


(p) Box in COUNTRY OF ORIGIN code and press SELECT key. Display will transition to UPDATE FUZE INVENTORY-SELECT FUZE TYPE for the selected country. Pressing the CANCEL key will return display to the UPDATE FUZE INVENTORY-SELECT FIELD screen.

# O-6 PDFCS INITIALIZATION - CONTINUED

## O-6.2 Initializing - Continued

### NOTE

- The +/- softkey will appear when the +/- column is selected. If you select the ONH column, the +/- softkey will not appear.
- Minus values must not exceed the amount on hand. Plus values must not cause the on-hand total to exceed 9999. Either of these conditions shall cause the error message: "VALUE TO SMALL" "ACK" or "VALUE TO BIG" "ACK".

(q) Move to proper column (ONH, or +/-). Press SELECT key.

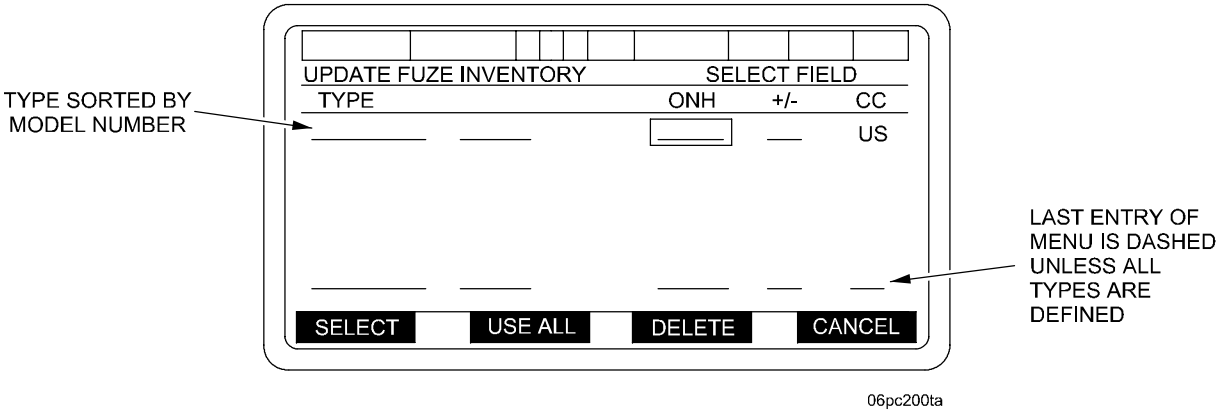


(r) Type in quantity and press ENT key.

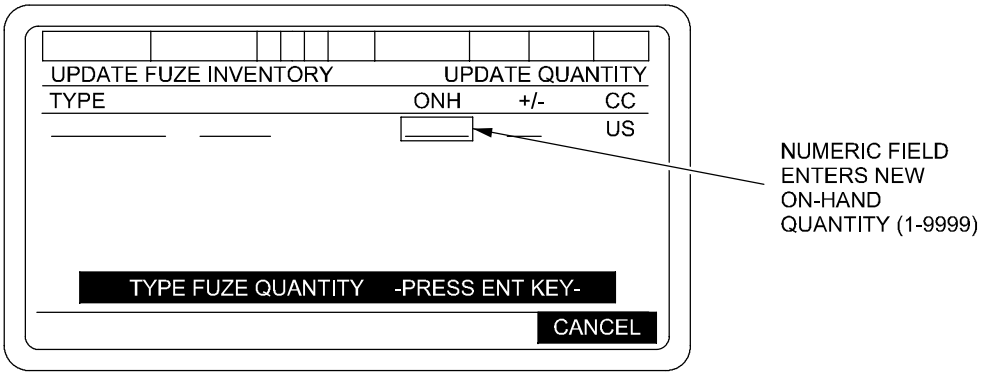


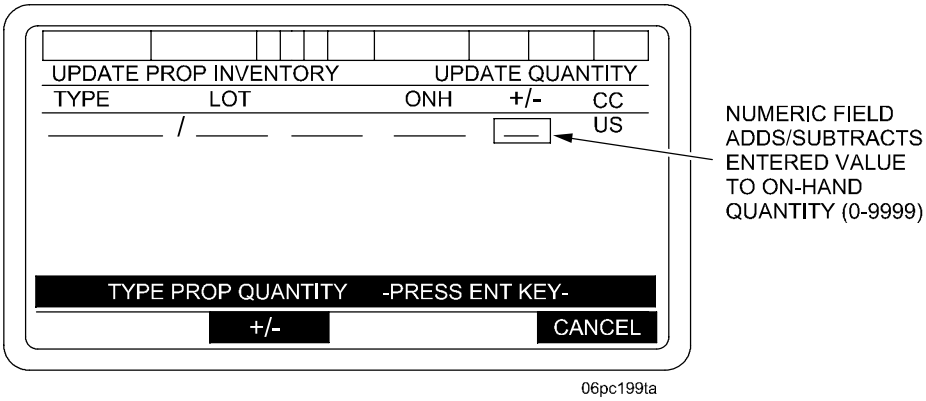

# O-6 PDFCS INITIALIZATION - CONTINUED

## O-6.2 Initializing - Continued

(s) When fuzes have been updated, press USE ALL key to return to INVENTORY MANAGEMENT menu.

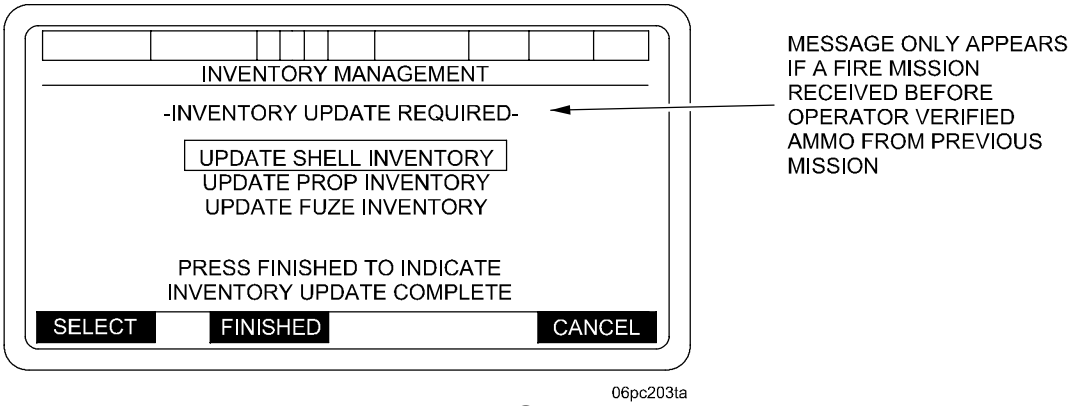


**NOTE**

- If a fire mission is activated while in any of the ammunition inventory sub-menus, all valid complete entries with consistent projectile/ propellant, country code matches shall be saved.
- If the CANCEL softkey is selected all edits will be ignored.
- When the FINISHED softkey is pressed the ammunition inventory shall be reviewed to insure each group of projectiles has at least one propellant and each group of propellants has at least one projectile. If a projectile group is found without a propellant or a propellant without a projectile, the PDFCS will display PROJECTILE/PROPELLANT MISMATCH menu. Pressing the CONTINUE softkey on this menu will return operator to the INVENTORY MANAGEMENT menu, at which time the operator has to update SHELL/PROP inventory.

(t) When all ammunition data has been entered or updated, press FINISHED key to display the SETUP AND INFORMATION menu.

# O-6 PDFCS INITIALIZATION - CONTINUED

## O-6.2 Initializing - Continued

(6) PROPELLANT TEMPERATURE - Must be entered in order to complete initialization. After ammunition has been received, a propellant temperature should be obtained by the crew using a calibrated propellant temperature gage. Propellant temperatures are entered as follows:

**NOTE**

- Accurate propellant temperatures must be entered in order for PDFCS to accurately compute muzzle velocity variances.
- Numerical value must be entered before sign. Default sign is (+).

(a) Box in PROP TEMP from SETUP AND INFORMATION menu. Press SELECT key. A PROPELLANT TEMPERATURE menu will be displayed. Type in correct temperature and press ENT key.

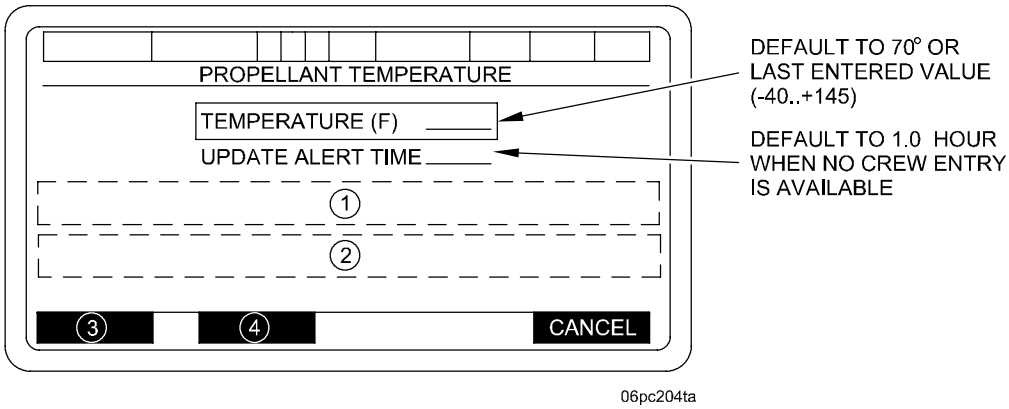


(1) TIME TO GO XX:XX (HOURS:MINUTES) OR TIME EXCEEDED

(2) WHEN TEMPERATURE SELECTED
TYPE TEMPERATURE IN FAHRENHEIT DEGREES: -40 TO +145
- PRESS ENT KEY -
WHEN UPDATE ALERT TIME SELECTED
TYPE UPDATE TIME IN 0.5 HOUR INCREMENTS: 0.5 TO 2.0
- PRESS ENT KEY -

(3) BLANK - When TEMPERATURE or UPDATE ALERT TIME selected
SELECT - When item is not selected

(4) USE ALL - When no item is selected
+/- When temperature is selected
BLANK - When UPDATE ALERT TIME is selected

(b) If a temperature outside allowable range is input, operator alert “VALUE TOO BIG” or “VALUE TOO SMALL” will appear when ENT key is pressed. The ACK key must be pressed to return to the PROPELLANT TEMPERATURE menu to enter correct temperature.

# O-6 PDFCS INITIALIZATION - CONTINUED

## O-6.2 Initializing - Continued

(c) A propellant temperature is input during initialization by selecting PROP TEMP from the SETUP AND INFORMATION menu to display the PROPELLANT TEMPERATURE menu. The operator is allowed to enter the propellant temperature. If no temperature is entered the PDFCS will use the default value of 70 degrees F. To enter the propellant temperature, place cursor to TEMPERATURE (F), press the SELECT softkey. An operator prompt “TYPE TEMPERATURE IN FAHRENHEIT DEGREES -40 TO +145 --PRESS ENTER KEY” will appear. Type in propellant temperature and press ENT key. In addition, the PDFCS incorporates a timed audible and visual alert to the operator to warn that a propellant temperature update is required. The time interval to use for the audible and visual alerts are selectable on the PROP TEMP menu, from 30 minutes (0.5 hours) to 120 minutes (2.0 hours) in 30 minute increments. The alert time is defaulted to 1.0 hour when no time is entered by the operator. To set alert time, place cursor on UPDATE ALERT TIME, and press SELECT softkey. An operator prompt, “TYPE UPDATE TIME IN 0.5 HOUR INCREMENTS 0.5 TO 2.0, PRESS ENTER KEY” will appear. When the operator has successfully entered the propellant temperature and alert time return to SETUP AND INFORMATION menu by pressing USE ALL softkey. When correct propellant temperature and alert time have been entered, pressing USE ALL will display the SETUP AND INFORMATION menu.

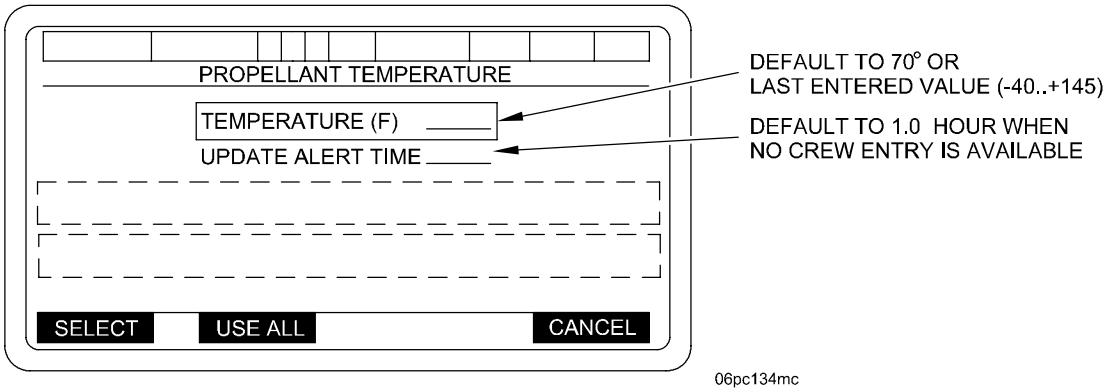


**NOTE**

- “Changed” means the item was “Selected” and “Entered”.
- “TEMPERATURE (F) update” updates the Powder Temperature and an internal DTG identifying when the TEMPERATURE (F) was last updated.
- “TIME TO GO” calculation = TEMPERATURE (F) update DTG − Current DTG. If the TIME TO GO is less than zero seconds, TIME TO GO equals TIME EXCEEDED.

(d) If only the UPDATE ALERT TIME is changed and the USE ALL key is pressed, the TEMPERATURE (F) will not be updated unless it had not been initialized during this particular power-up in which case it will be updated, UPDATE ALERT TIME will be updated, TIME TO GO will be recalculated and PDFCS will return to the SETUP AND INFORMATION display.

(e) If only TEMPERATURE (F) is changed and USE ALL is pressed, TEMPERATURE (F) will be updated but UPDATE ALERT TIME will not. TIME TO GO will be recalculated and PDFCS will return to the SETUP AND INFORMATION display.

(f) If neither UPDATE ALERT TIME or TEMPERATURE (F) is changed and USE ALL is pressed, TEMPERATURE (F) will be updated, UPDATE ALERT TIME will not be updated and TIME TO GO will be recalculated and PDFCS will return to the SETUP AND INFORMATION display.

# O-6 PDFCS INITIALIZATION - CONTINUED

## O-6.2 Initializing - Continued

(g) If both UPDATE ALERT TIME and TEMPERATURE (F) are changed and USE ALL is pressed, both fields will be updated and TIME TO GO will be recalculated and PDFCS will return to the SETUP AND INFORMATION display.

**NOTE**

Do not enter a time value smaller than 0.5 or larger than 10.0 minutes. Either of these conditions will cause the error message “VALUE TOO SMALL” “ACK” or “VALUE TOO BIG” “ACK”.

(7) TOT RESPONSE TIME – This is used to set crew time response for a specific fire mission. The data tells the PDFCS how much advance warning a crew needs before a Time on Target (TOT) mission is to be fired. This data is entered as follows:

(a) Box in TOT RESPONSE from SETUP AND INFORMATION menu. Press SELECT key to display a TIME ON TARGET CREW RESPONSE TIME menu.

(b) Enter data for response time and press the ENT key. This will return the display to the SETUP AND INFORMATION menu.

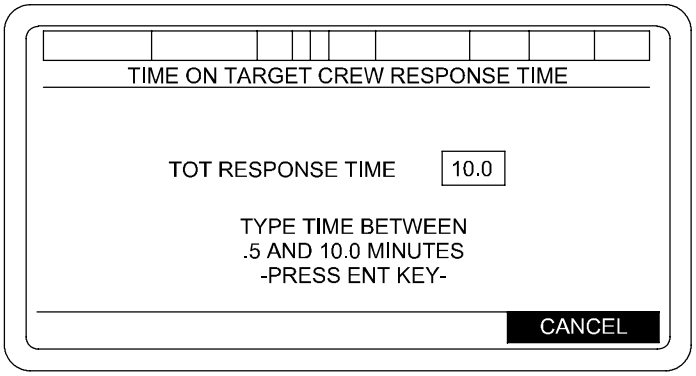


06pc136ma

# O-6 PDFCS INITIALIZATION - CONTINUED

## O-6.2 Initializing - Continued

(8) LOAD ELEVATION - This data is entered in the PDFCS to specify an elevation that the gun tube will automatically return to after firing when the LOAD key is pressed on the PDU panel. Enter LOAD ELEVATION as follows:

(a) Box in LOAD ELEVATION from the SETUP AND INFORMATION menu. Press SELECT key to display a TUBE LOAD ELEVATION menu.

**CAUTION**

Do not enter an elevation greater than 300 mils. Settings above 300 mils may result in breech failing to close and could cause unnecessary wear on spring pack.

**NOTE**

Numerical value must be entered before sign. Default sign is (+).

(b) Type in desired elevation data and press ENT key. The SETUP AND INFORMATION menu will be displayed.

**NOTE**

- If a value larger than 1333 is entered, Paladin will display the operator alert “VALUE TOO BIG” “ACK”.
- If a value smaller than −200 is entered, Paladin will display the operator alert “VALUE TOO SMALL” “ACK”.

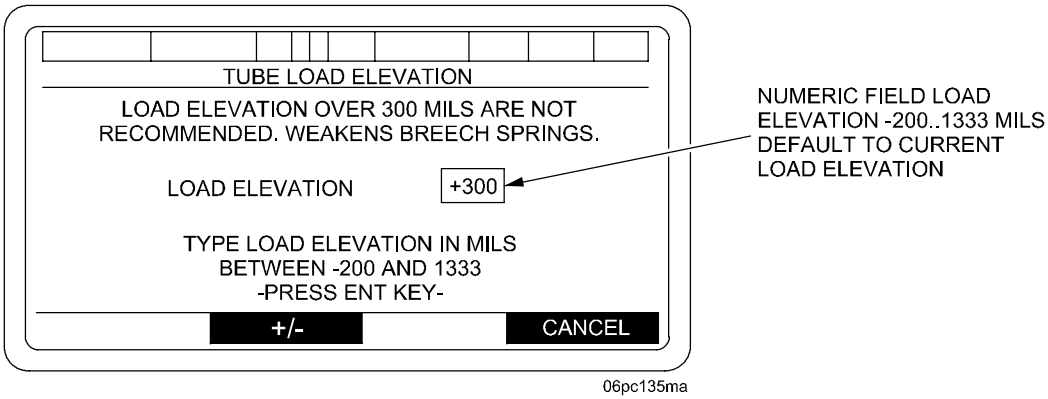

# O-6 PDFCS INITIALIZATION - CONTINUED

## O-6.2 Initializing - Continued

(9) SECTOR OF FIRE - Used to define the howitzer's sector of fire. Data is entered as follows:

(a) Box in SECTOR OF FIRE from SETUP AND INFORMATION menu. Press SELECT key to display DEFINE SECTOR OF FIRE menu.

(b) Box in LEFT LIMIT OF SECTOR. Press SELECT key. Enter data. Press ENT key. Move box to AOF. Press SELECT key. Enter data. Press ENT key. Move box to RIGHT LIMIT OF SECTOR. Press SELECT key. Enter data. Press ENT key.

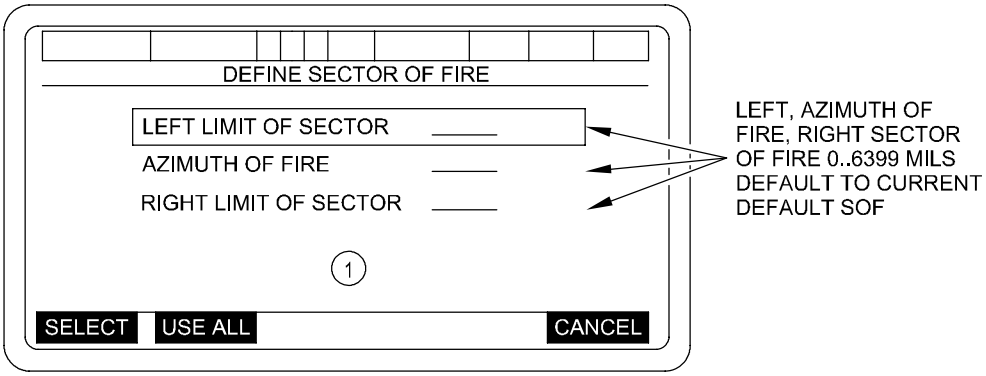


IF LEFT = RIGHT

ERROR - LEFT AND RIGHT EQUAL | ACK

If AZIMUTH OF FIRE is not to RIGHT OF LEFT LIMIT and LEFT OF RIGHT LIMIT.

AZIMUTH OF FIRE NOT IN SECTOR | ACK

(1) BLANK: No selection made

Selection made:

"TYPE AZIMUTH BETWEEN 0 AND 6399 MILS"
"PRESS ENT KEY"

**NOTE**

- Operator entered Sector of Fire data will be used by the PDFCS during Move Orders to help orient the vehicle during emplacement at a Firing Point/Firing Area.
- During Emplacement after a Move Order, this AOF will be "Base Azimuth" for 3200 Deflection.
- SECTOR OF FIRE entered by the operator will be used to calculate ballistic if FDC has not sent SECTOR OF FIRE for prescribed location (FIRING AREA/POINT).

# O-6 PDFCS INITIALIZATION - CONTINUED

## O-6.2 Initializing - Continued

(c) When all correct data has been entered, press USE ALL key to enter data. The following message will be displayed: "ARE YOU SURE" "YES" "NO". If YES is selected the sector of fire will be updated and the display will return to SETUP AND INFORMATION menu. If NO is selected the message will be removed for re-entry of data. Operator entered Sector of Fire data will update the Site Data display.

(d) When all initialization data (Asterisk items from SETUP AND INFORMATION menu) has been entered, and the navigation subsystem alert "OK TO MOVE OR SHOOT" "ACK" has been displayed and the ACK key pressed, then press CANCEL key on SETUP AND INFORMATION menu to bring up a SECTION IN ORDER AT INITIALIZATION POINT display.

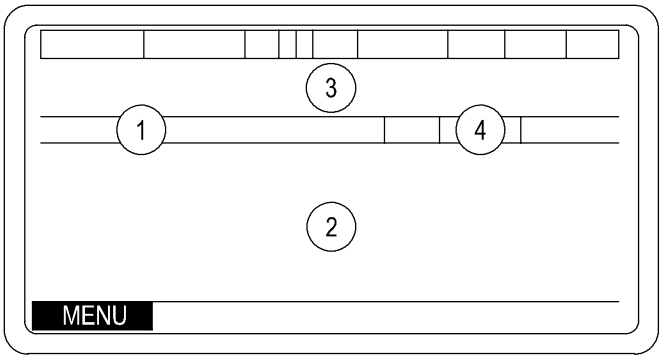


06pc138ma

1 "FPF/PRI EXISTS" FPF/PRI target exists in stored target table
"NO FPF/PRI EXISTS" - FPF/PRI target does not exist in stored target table

2 "SECTION IN ORDER AT LOGISTICS POINT" - Arrival location is logistics point
"SECTION IN ORDER AT INITIALIZATION POINT" - Arrival location is initialization point

3 DO NOT MOVE - No FPF/PRI exists
DO NOT MOVE / DO NOT LOAD - FPF/PRI target exists

4 Tube temperature status

## O-6 PDFCS INITIALIZATION - CONTINUED

### O-6.3 Initialization After an Orderly Shutdown.

**NOTE**

PMVS must be installed and connected prior to turning the vehicle MASTER power switch ON.

During PDFCS operation, it may become necessary to power down and then back up; (example, a system lockup occurs).

**NOTE**

After PDFCS has been powered down, the PDFCS will power up and be operational in approximately 3-4 minutes.

Power down in this form causes an orderly shutdown, and some of the PDFCS data is saved. An orderly shutdown also occurs when the power is turned off after normal operations. Some of the data saved on orderly shutdown is Network Setup, Ammo Inventory, Navigation Data (location where system was powered down), TOT Response, Load Elevation, and the last operator-entered Sector of Fire. When the system is turned back on from an orderly shutdown, step-by-step initialization is not necessary, although action on all asterisk marked items on the SETUP AND INFORMATION menu must be accomplished. The process for initialization after an orderly shutdown is as follows:

a. System Power Up. Set MASTER switch and Power Conditioner Unit-2 circuit breakers to ON.

With the DAGR mounted and all external cables attached, press the PWR/QUIT key on the DAGR key pad. The DAGR should power up automatically and perform its self-test (BIT). Operate the DAGR in accordance with the DAGR TM 11-5820-1172-13.

If the DAGR does not have a current key (i.e. the DAGR was previously zeroized, newly installed or the key has expired), then load a valid key in accordance with the DAGR TM 11-5820-1172-13.

**NOTE**

To load a key, the DRUH must be off, or the P4 DRUH-DAGR signal connector must be disconnected to cause a GPS COM FAIL. Re-attachment of P4 DRUH-DAGR signal connector after DAGR keying will automatically cause DRUH-DAGR communications to resume if DRUH is on.

If the DAGR antenna has a clear view of the sky, turn DAGR on. If the antenna's view of the sky is blocked (e.g. the vehicle is in a building, under tree cover or parked next to a large structure), move vehicle until the DAGR is clear.

If the vehicle cannot be moved, place DAGR in Standby mode until the vehicle can be moved to a location with a clear view of the sky.

# O-6 PDFCS INITIALIZATION - CONTINUED

## O-6.3 Initialization After an Orderly Shutdown - Continued

### NOTE

- If the DAGR is off, the Navigation Subsystem will still accept initialization data from the PDFCS for inertial operation and the Navigation System will operate as before.
- Guidelines for conditions and times for the DAGR to obtain position data acceptable by the PDFCS.

If the antenna has a clear view of the sky and DAGR has a valid position, current GPS time, current GUV key, and has stored a current satellite almanac, DAGR will be acceptable for use in about three minutes following the first turn-on of the day. It will take about 90 seconds for subsequent turn-ons. These are the normal operating conditions.

### NOTE

PMVS must be installed and connected prior to turning the vehicle MASTER power switch on.

Make sure TRAINING switch on PDU is OFF. Set POWER switch on PDU to ON. When power is first applied to the PDFCS, the display will be blank and the PDFCS will automatically perform its internal self-test (BIT). Next a screen will be displayed with this message “INITIALIZATION IN PROGRESS”.

### NOTE

- The time lapse between first two screens can range from 3 to 5 minutes.
- If screen stays blank for more than 7 minutes, power down system.

A “SYSTEM VERIFICATION FAILURE” message will be displayed only if a failure is detected.

# O-6 PDFCS INITIALIZATION - CONTINUED

## O-6.3 Initialization After an Orderly Shutdown - Continued

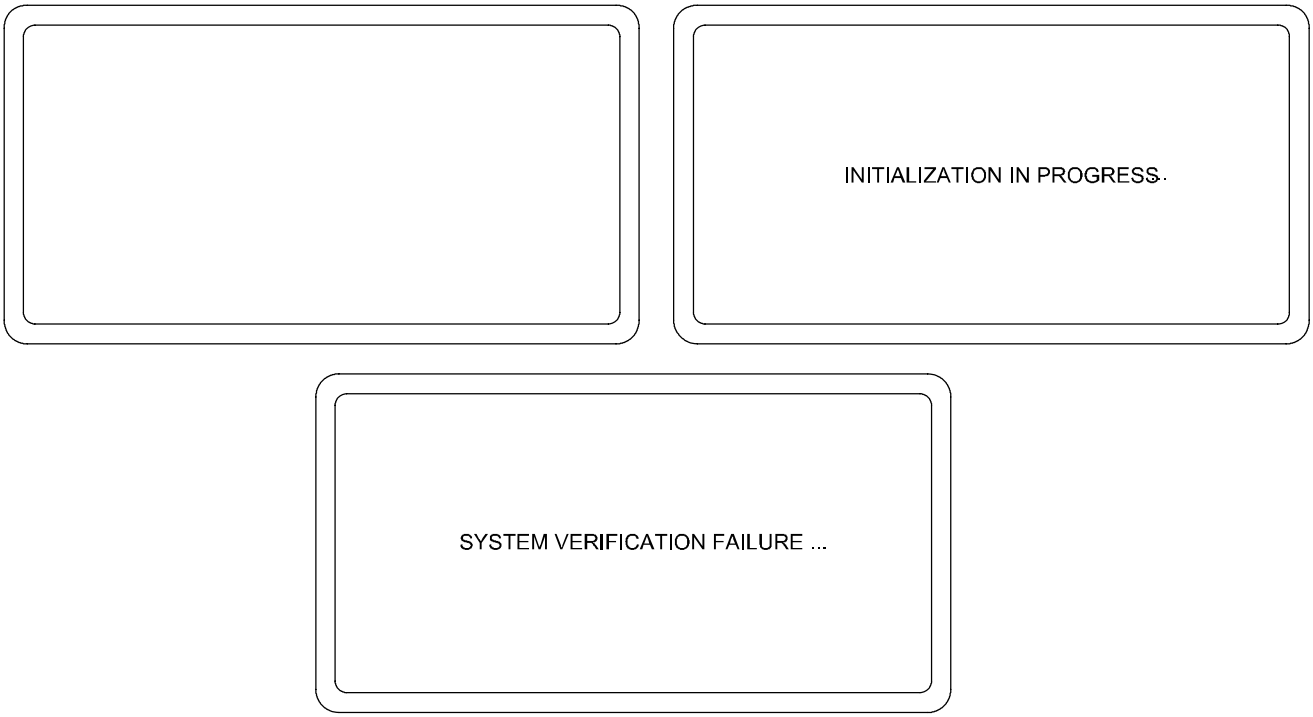


06pc272t

After the PDFCS powers up, the DAGR screen should read:

REMOTE CONTROL LOCKOUT
EMERGENCY ZEROIZE ALLOWED
MARK FASTFIX BASIC

At this point the DAGR key pad will become inactive. The only DAGR operation allowed using the key pad is EMERGENCY ZEROIZE.

If this message is not displayed on the DAGR screen, and the Low Priority Message “GPS OUT - GPS DISCONNECTED” is not displayed on the PDU, ensure that the DRUH-DAGR signal connector (P4) plug on the W17A cable is connected and secure. Once this DAGR screen is displayed, proceed with system initialization.

### NOTE

- NAV SUBSYSTEM includes: VMS, DRUH, VMS modems
- PCU-2 SUBSYSTEM includes: PCU-2 and both back-up batteries
- The switches on the PCU-2 are circuit breakers. They should be left ON at all times, so they will not wear out from being turned off and on constantly.

(1) This screen displays the subsystems that are checked by BIT. As the subsystems are checked, the dashed lines will change to a subsystem status (OK, DEGRADED, OUT, - -). The - - appears on the MVS status line when the PDFCS could not be connected to the MVS. This screen also identifies the system software version.

# O-6 PDFCS INITIALIZATION - CONTINUED

## O-6.3 Initialization After an Orderly Shutdown - Continued

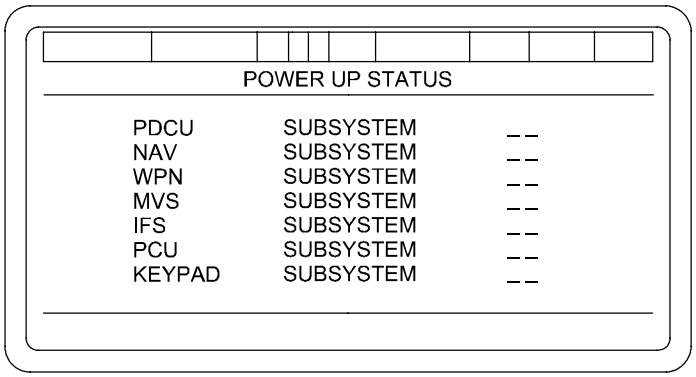


06pc071mj

In the event of a failure during POWER UP STATUS, the message, “DEGRADED-ACK TO CONTINUE”, will be displayed on the bottom line of the display. To continue, depress softkey under ACK. After the self-test is complete, SELECT OPERATIONAL MODE menu is displayed.

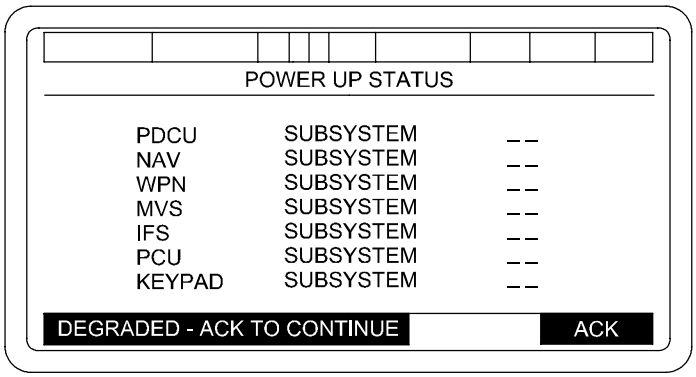


06pc074md

**NOTE**

If PCU-2 contains an incorrect configuration, the PDFCS will not allow the operator to select normal operations until a correct PDU software configuration is downloaded.

# O-6 PDFCS INITIALIZATION - CONTINUED

## O-6.3 Initialization After an Orderly Shutdown - Continued

When configuration verification checking indicates that an invalid howitzer software configuration is present, a short error message “INVALID SOFTWARE CONFIGURATION” “ACK” will appear on the softkey label line of the PDU.

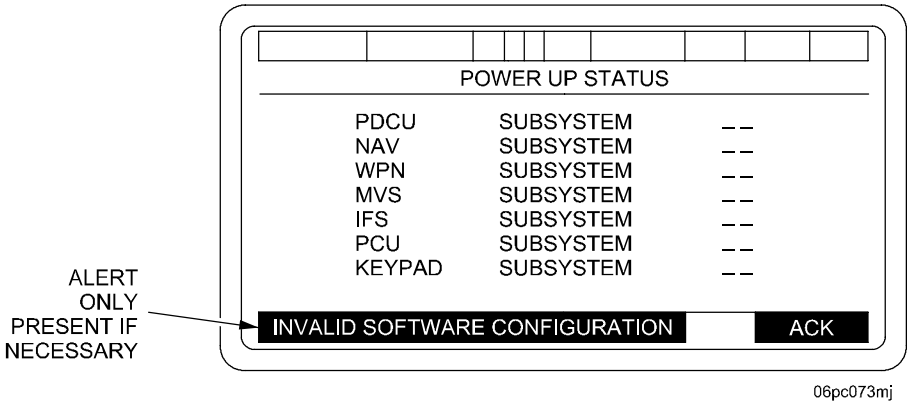


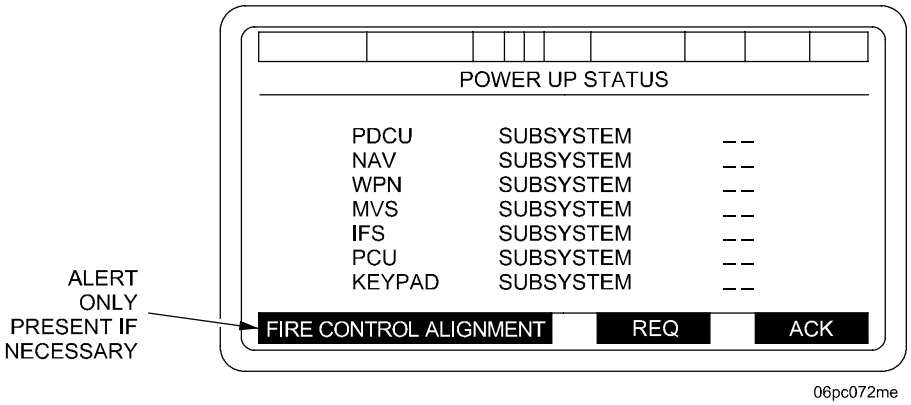


When the message is acknowledged, the PDFCS will proceed to the SELECT OPERATIONAL MODE menu. To view detailed software configuration information for each LRU, MAINTENANCE should be selected, IAW procedure in para O-9.1.

(2) Operational Mode Selection Menu.

This menu allows selection of the primary operating mode for the PDFCS.

The selection structure shows the prompting for Embedded Training selection. Note that the TRAINING selection and the associated prompting will not be available if the Embedded Training Controller fails power-up BIT.

# O-6 PDFCS INITIALIZATION - CONTINUED

## O-6.3 Initialization After an Orderly Shutdown - Continued

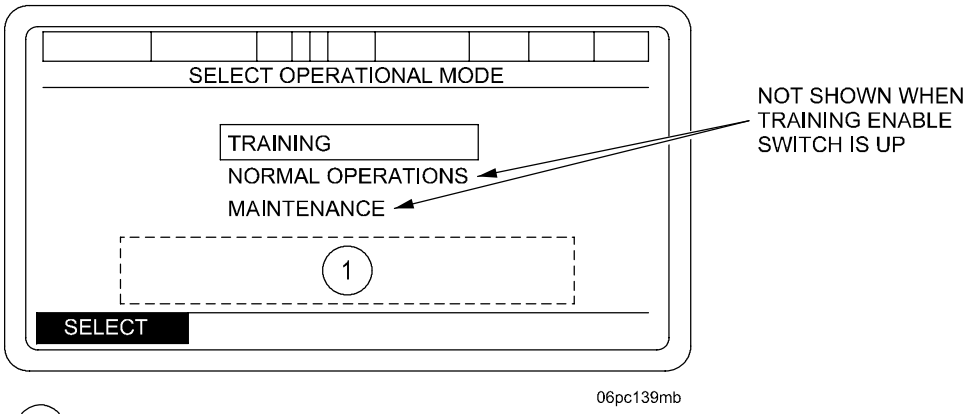


1

- WHEN TRAINING SWITCH IS UP:

POSITION TRAINING ENABLE SWITCH DOWN
TO SELECT OTHER MODES

- WHEN TRAINING SWITCH IS DOWN:

POSITION TRAINING ENABLE SWITCH UP
TO SELECT TRAINING MODE

b. Initialization.

**NOTE**

After an orderly shutdown, follow the procedures below. However, if a catastrophic failure happens within the system, go to para O-6.4.

Select NORMAL OPERATIONS on the SELECT OPERATIONAL MODE menu and press SELECT softkey. A NETWORK menu will be displayed.

(1) NETWORK - Check data on the NETWORK menu for correctness against current data from POC/FDC and press FINISHED.

Using the NET ACCESS menu, check that data in the displayed menu shows same data that the unit SOP specifies.

**NOTE**

To ensure efficient set up of the digital net, it is very important that NETWORK data be assigned and controlled by POC/FDC. Verify data per local SOP.

(a) Only one network configuration will be active at any one time. The active configuration is identified by the label “*ACTIVE*” in the STATUS column.

(b) Inactive configurations do not have anything displayed in the STATUS column.

(c) TACFIRE configurations will not display anything in the COMSEC and MODE columns of the NETWORK screen.

# O-6 PDFCS INITIALIZATION - CONTINUED

## O-6.3 Initialization After an Orderly Shutdown - Continued

(d) 188-220 communications configurations identify the Device, Baud, COMSEC and MODE. 188-220 configurations with any customized values identify the Device as “CUSTOM/R” for Radio and “CUSTOM/W” for Two-Wire.

(e) The PDFCS will not reorder network configurations as a result of deletions.

(f) The FINISHED and VIEW softkeys are not visible unless at least one configuration is defined.

(g) softkey sequencing shall be as follows:

SELECT softkey - If the highlighted configuration was previously defined, control transitions to NETWORK SETTINGS-SELECT CONFIGURATION OPTION display. If the highlighted configuration has not been defined, control transitions to NETWORK SETTINGS-STANDARD COMMUNICATION CONFIGURATION display (see para O-6.2c).

FINISHED softkey - When the operator presses the “FINISHED” softkey the PDFCS stores all defined network configurations and control transitions to Normal Operational Initialization display.

VIEW softkey - When the VIEW softkey is pressed and the currently selected network configuration has been defined, control transitions to the NETWORK SETTINGS display (see para O-6.2e). When the VIEW softkey is pressed and the currently selected network configuration has not been defined, control does not transition.

(h) PDFCS supports 11 predefined communications configurations (see Table O-13).

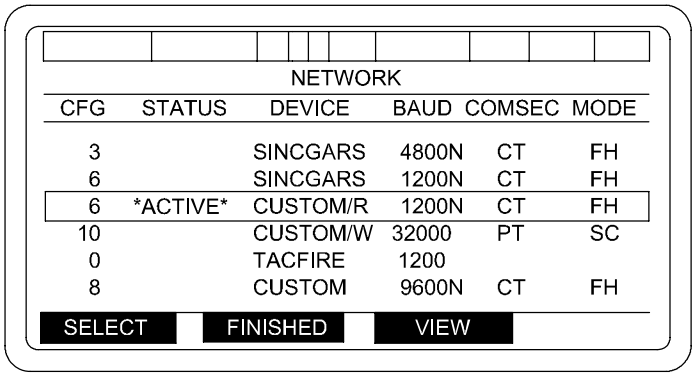


06pc322t

# O-6 PDFCS INITIALIZATION - CONTINUED

## O-6.3 Initialization After an Orderly Shutdown - Continued

(2) SET DATE/TIME - Select SET DATE/TIME on SETUP AND INFORMATION menu and press SELECT to display a SET DATE/TIME GROUP menu.

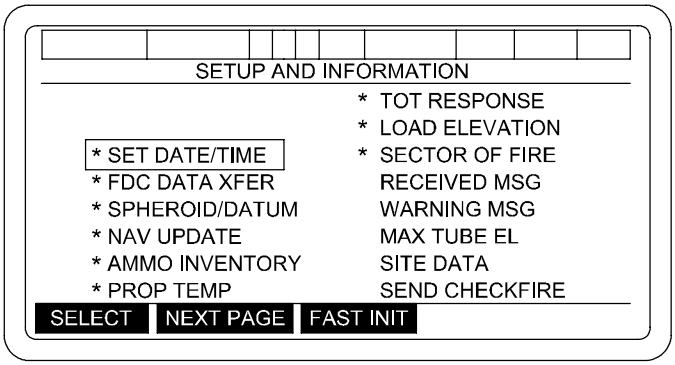


06pc327ta

**NOTE**

Use according to unit SOP.

If GPS data is available select USE GPS.

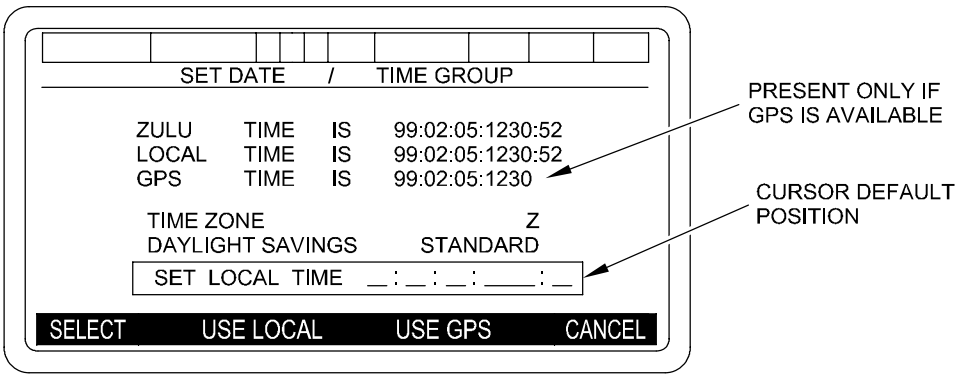


06pc177ta

If GPS is not available or if POC has instructed you not to use GPS time, type in new DTG.

SELECT TIME ZONE - Enter SELECT TIME ZONE in accordance with unit SOP.

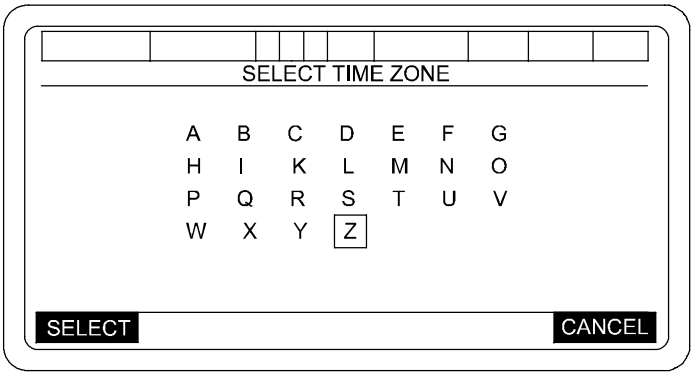


06pc178ta

# O-6 PDFCS INITIALIZATION - CONTINUED

## O-6.3 Initialization After an Orderly Shutdown - Continued

SELECT DAYLIGHT SAVINGS - Enter DAYLIGHT SAVINGS TIME in accordance with unit SOP.

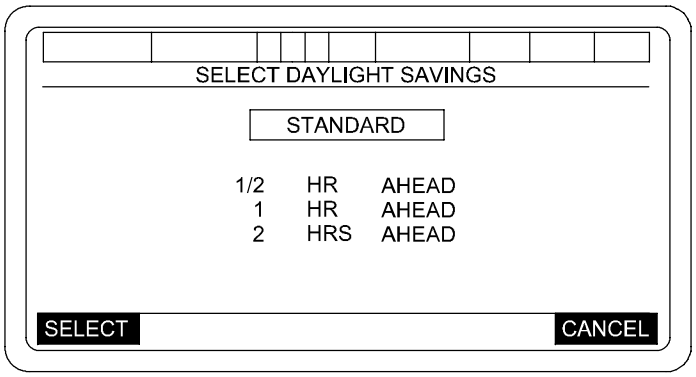


06pc179ta

Contact the POC by voice radio to obtain the correct date/time data and a MARK. Type in date/time data (year, month, day, hour, minute) as given by the POC. If the data is entered incorrectly a message will be displayed stating “Invalid DTG Value”, and you will have to re-enter the data. When this is done, another SET DATE/TIME GROUP menu will be displayed.

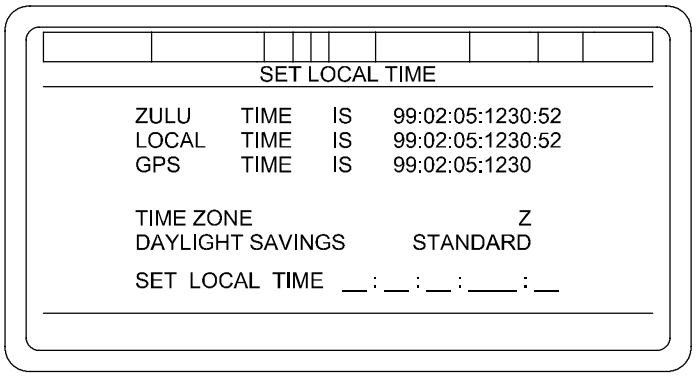


06pc180tb

When the FDC operator gives a countdown and announces MARK, press MARK. The PDFCS and FDC time should now be synchronized. A SETUP AND INFORMATION menu is then displayed on the DU.

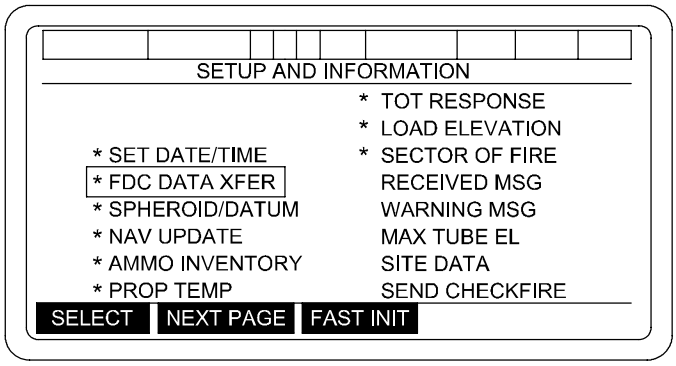


06pc327t

# O-6 PDFCS INITIALIZATION - CONTINUED

## O-6.3 Initialization After an Orderly Shutdown - Continued

### NOTE

The FDC DATA TRANSFER must be done each time you initialize the PDFCS, if the POC/FDC is operational.

(3) FDC DATA TRANSFER - To obtain current initialization data (current MET, registration data, etc.), select FDC DATA XFER on SETUP AND INFORMATION menu. Press SELECT softkey to display a FDC DATA TRANSFER menu.

The INITIALIZATION menu item will be automatically boxed and the operator will be prompted to press “YES” or “NO”. Pressing “YES” will cause a message to be sent to FDC requesting initialization data. If you know that FDC is not operational, pressing “NO” will clear the * from FDC DATA XFER on the SETUP AND INFORMATION menu.

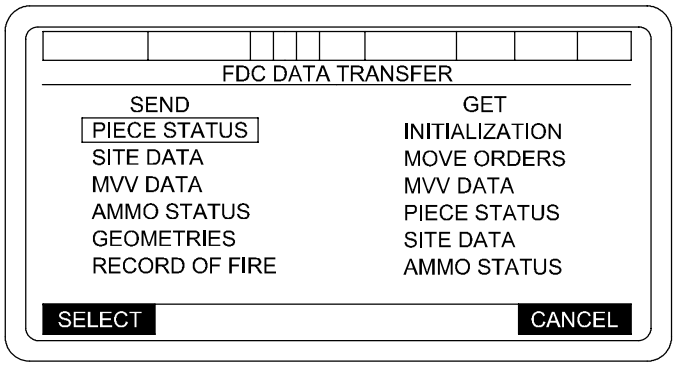


06pc328t

(4) ENTER SPHEROID/DATUM - The FDC DATA XFER, INITIALIZATION data includes a SPHEROID/DATUM, but does not transfer the necessary map DATUM. To input the correct DATUM, box in the “ENTER SPHEROID/DATUM” and press the SELECT key. This brings up the SPHEROID/DATUM entry menu.

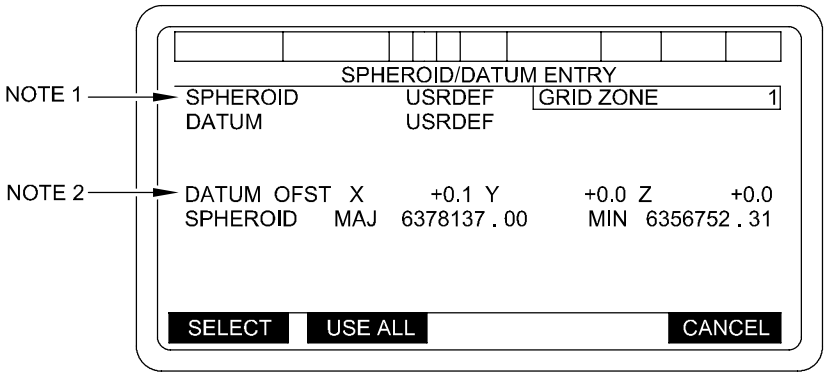


06pc249tc

Check to see if all the data is correct. If it is correct, press the USE ALL key, and proceed with the initialization. If an entry is not correct, select that field and make corrections.

NOTE 1 Selection of this field will display select spheroid menu.

NOTE 2 Field is only present if user defined (USRDEF) datum is used.

# O-6 PDFCS INITIALIZATION - CONTINUED

## O-6.3 Initialization After an Orderly Shutdown - Continued

When grid zone is selected the following will be displayed:

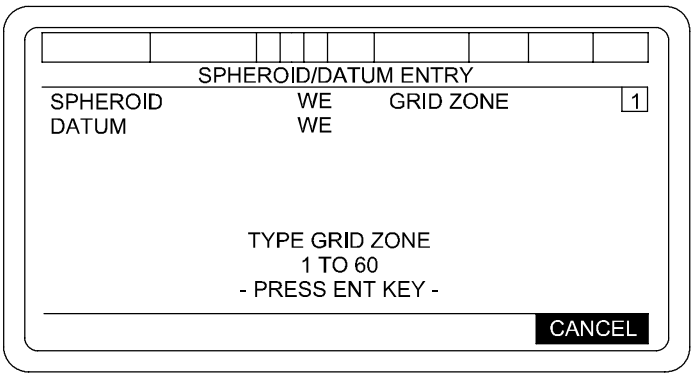


06pc250ta

When DATUM is selected, SELECT DATUM menu is displayed:

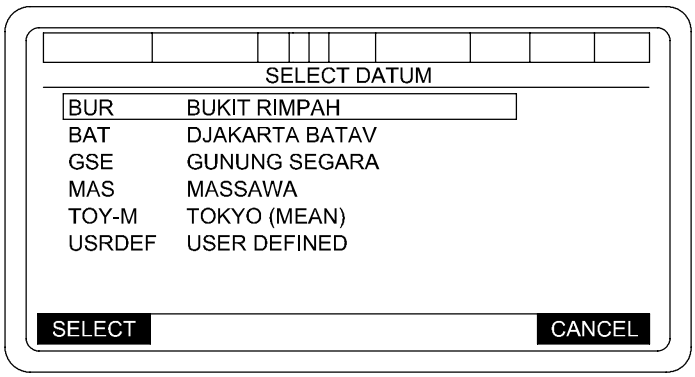


06pc253ta

Box in the correct DATUM and press the SELECT key. The DATUMs available are dependent on the SPHEROID selected. See PDFCS/FDC SPHEROID AND DATUM table in appendix J.1 for SPHEROID/DATUM combinations.

# O-6 PDFCS INITIALIZATION - CONTINUED

## O-6.3 Initialization After an Orderly Shutdown - Continued

### NOTE

The reference frame for UTM position coordinates is a DATUM. Typically, a Local DATUM is defined by an ellipsoidal earth model (SPHEROID) and a starting point (origin) for the coordinate system. Coordinates on a map or in a Trig list (SCPs) often are on a Local DATUM. An example of a Local DATUM is the North American 1927 (NAD 27) DATUM used in the United States. There have been many different Local DATUMs developed. GPS computes position on the World Geodetic System 1984 (WGS 84), a worldwide coordinate system. To use GPS with coordinates on a Local DATUM, the coordinates must be mathematically shifted. The PDFCS (DRUH and DAGR) can automatically perform DATUM shifting, but first the operator must select the Local DATUM to be used, or provide the appropriate shift parameters. For PDFCS operation, Local DATUMs are represented by two sets of parameters: The Local Ellipsoid (SPHEROID) and shift parameters as defined for each Local DATUM (DATUM IDs). The FDC can provide the SPHEROID. But the FDC cannot provide the Local DATUM. Therefore the operator must enter it. The SPHEROID selected will determine which DATUM IDs will be available for selection. The PDFCS/FDC SPHEROID and DATUM TABLE, appendix J.1, provides the SPHEROID number for the PDFCS and FDC, which DATUM IDs are available for that SPHEROID number and the normal coverage area. Note that there may be more than one DATUM ID associated with a Local DATUM because the shifts vary by locality. For other DATUMs or areas outside the indicated coverage area, User Defined (USDDEF) Datum shifts may be entered manually. The table is not intended as an absolute. A map sheet will identify the DATUM name, Ellipsoid (SPHEROID) name and the coordinate type, or the map sheet will identify the area. The data from a Trig list should identify the same information. These parameters must be correlated to the DATUM ID. If the applicable DATUM ID hasn't been programmed in the PDFCS, shift parameters for many other DATUMs and regions have been published in DMA TR 8350.2 and may be entered thru the DATUM X, Y and Z offsets. Note that the PDFCS cannot accept shift parameters for all Datums because its SPHEROID capability is limited to those listed in the PDFCS/FDC Spheroid and Datum table in appendix J.1.

# O-6 PDFCS INITIALIZATION - CONTINUED

## O-6.3 Initialization After an Orderly Shutdown - Continued

If the DATUM USR DEF is selected, then the DATUM X, Y, and Z offsets must be entered. These values must be obtained from the POC and should only be used with guidance from Battery Commander. The ENTER USER DATUM PARAMETERS page should look like:

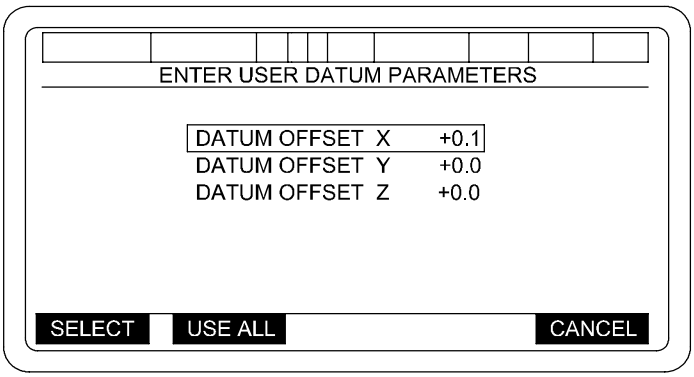


06pc254ta

When DATUM OFFSET X is selected:

Type -2000.0 TO +2000.0:
Press ENT key.

When DATUM OFFSET Y is selected:

Type -2000.0 TO +2000.0:
Press ENT key.

When DATUM OFFSET Z is selected:

Type -2000.0 TO +2000.0:
Press ENT key.

After all the correct data has been entered, press the USE ALL key to clear and return to the main menu.

(5) NAVIGATION UPDATE - Select NAV UPDATE and press SELECT soft key to display a NAVIGATION SUBSYSTEM UPDATE menu.

**NOTE**

- If vehicle has not been moved since orderly shutdown, the Navigation Subsystem will initiate a Stored Heading Align, which will be completed in about 90 seconds.
- If vehicle has been moved since orderly shutdown, move vehicle to a survey point and enter survey data.

# O-6 PDFCS INITIALIZATION - CONTINUED

## O-6.3 Initialization After an Orderly Shutdown - Continued

Check data for correctness. If correct, press USE ALL softkey. The prompt, NAV POSITION UPDATE TO START, ARE YOU SURE (YES OR NO), will be displayed. Make proper selection. Press the YES key to RESTART the Navigation Subsystem and display the SETUP AND INFORMATION menu.

Press the NO key to redisplay NAVIGATION SUBSYSTEM UPDATE menu. Make corrections or press CANCEL to display SET UP AND INFORMATION menu.

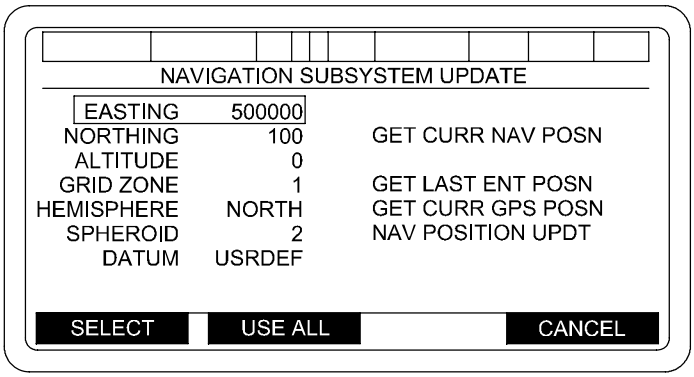


06pc144ma

(6) AMMO INVENTORY - Select AMMO INVENTORY on the SETUP AND INFORMATION menu. Press SELECT softkey to display INVENTORY MANAGEMENT menu.

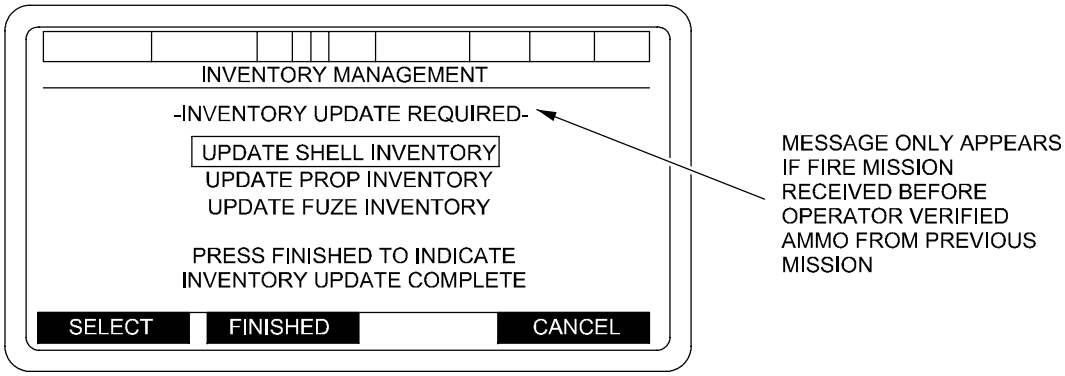


06pc145ma

**NOTE**

If a fire mission is activated while in any of the ammunition inventory sub-menus, all valid complete entries shall be saved.

If the ammunition inventory is current, press FINISHED softkey to display the SETUP AND INFORMATION menu. If ammunition inventory is not current, to enter ammunition data, refer to para O-6.2.

# O-6 PDFCS INITIALIZATION - CONTINUED

## O-6.3 Initialization After an Orderly Shutdown - Continued

(7) PROPELLANT TEMPERATURE - Select PROP TEMP on SETUP AND INFORMATION menu. Press SELECT key to display a PROPELLANT TEMPERATURE menu.

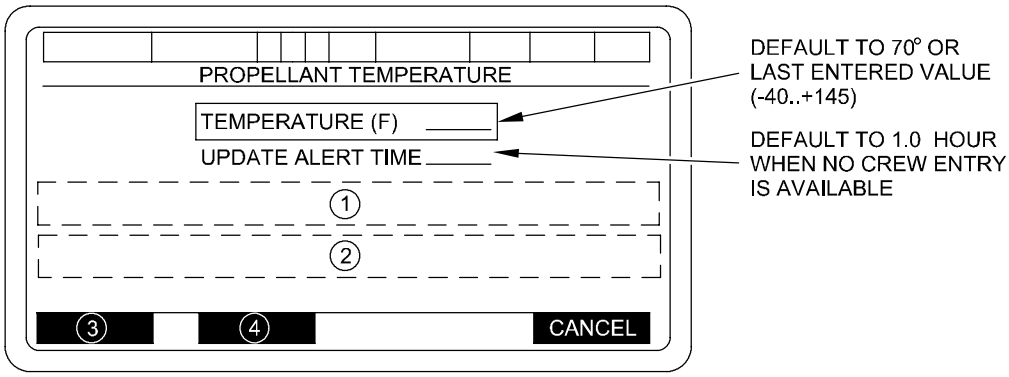


06pc204ta

(1) TIME TO GO XX:XX (HOURS:MINUTES) OR TIME EXCEEDED

(2) WHEN TEMPERATURE (F) SELECTED
TYPE TEMPERATURE IN FAHRENHEIT
DEGREES -40 TO +145
- PRESS ENT KEY -

WHEN UPDATE ALERT TIME SELECTED
TYPE UPDATE TIME IN 0.5 HOUR
INCREMENTS 0.5 TO 2.0
- PRESS ENT KEY -

(3) BLANK - WHEN TEMPERATURE (F) OR UPDATE ALERT TIME SELECTED
SELECT - WHEN ITEM IS NOT SELECTED

(4) USE ALL - WHEN NO ITEM IS SELECTED
+/- WHEN TEMPERATURE (F) IS SELECTED
BLANK - WHEN UPDATE ALERT TIME IS SELECTED

# O-6 PDFCS INITIALIZATION - CONTINUED

## O-6.3 Initialization After an Orderly Shutdown - Continued

If displayed temperature and update alert time are correct, press USE ALL key. If another temperature or alert time entry is necessary, box the desired item and press SELECT key. Type in new temperature or alert time and press ENT key. When entries are correct, press USE ALL key. The SETUP AND INFORMATION menu will be displayed.

(8) TOT RESPONSE - To access the TOT RESPONSE menu, press NEXT PAGE key to display next page of SETUP AND INFORMATION menu.

Select TOT RESPONSE and press SELECT to display a TOT RESPONSE menu.

Type in desired time to be used and press ENT key. The SETUP AND INFORMATION menu will be displayed.

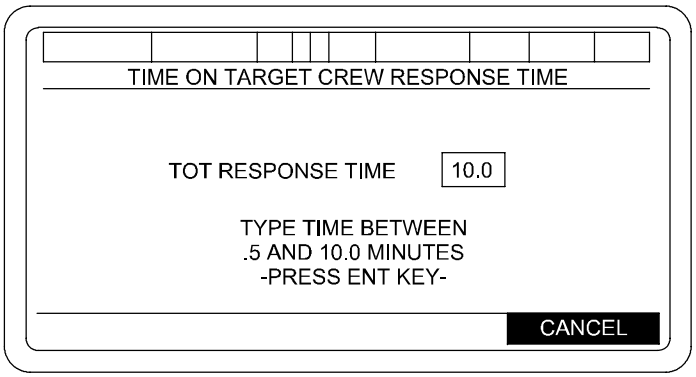


06pc136ma

(9) Select LOAD ELEVATION on the SETUP AND INFORMATION menu. Press SELECT key to display a TUBE LOAD ELEVATION menu.

**CAUTION**

Do not enter an elevation greater than 300 mils. Settings above 300 mils may result in breech failing to close and could cause unnecessary wear on spring pack.

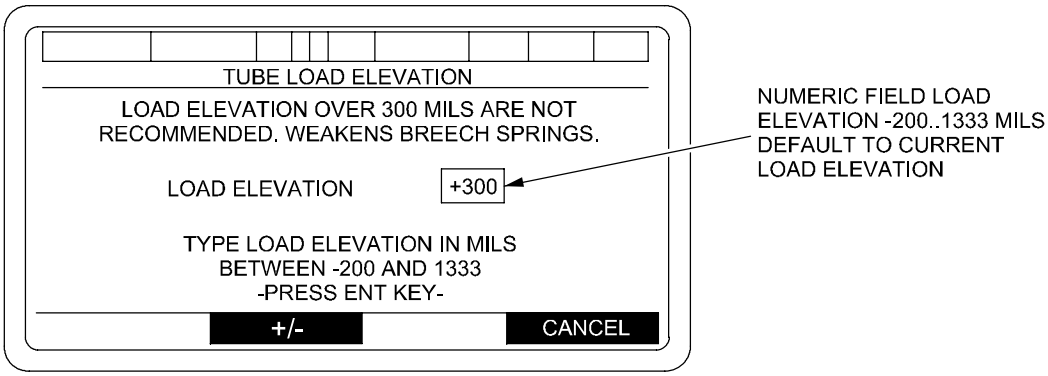


06pc135ma

If load elevation shown is the desired elevation, press ENT key. If a new elevation is desired, type in desired elevation and then press ENT key. The SETUP AND INFORMATION menu will be displayed.

# O-6 PDFCS INITIALIZATION - CONTINUED

## O-6.3 Initialization After an Orderly Shutdown - Continued

(10) Select SECTOR OF FIRE on SETUP AND INFORMATION menu. Press SELECT softkey to display a DEFINE SECTOR OF FIRE menu.

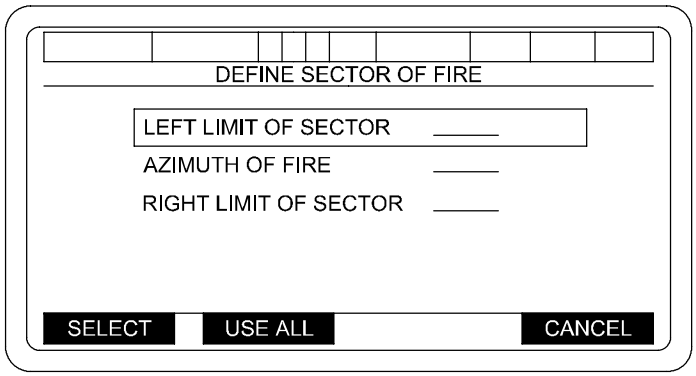


06pc205tb

If data displayed on menu is desired sector of fire, press USE ALL softkey. If a change is needed, select area to be changed, type in change and press ENT key. Repeat for additional changes, when complete press USE ALL softkey. The following message will be displayed: “ARE YOU SURE” “YES” “NO”. If YES is selected data will be updated and the display will return to SETUP and INFORMATION menu. If NO is selected the message will be removed for re-entry of data. A POS UPDATE or NAV RESTART must be performed if the changes are to be used by the PDFCS.

(11) SECTION IN ORDER - When navigation alignment time has been completed, or message “OK TO MOVE OR SHOOT” “ACK” has been acknowledged, a CANCEL prompt will appear on the SETUP AND INFORMATION menu. Press CANCEL to display the SECTION IN ORDER AT INITIALIZATION POINT screen.

The PDFCS system is now initialized and can perform missions as directed.

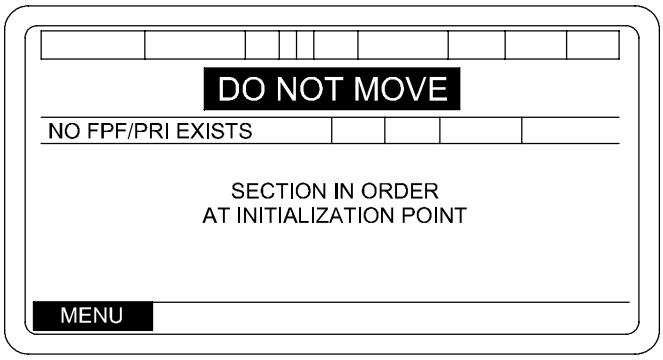


06pc148ma

## O-6 PDFCS INITIALIZATION - CONTINUED

### O-6.4 Initialization After a Catastrophic Failure.

a. If a catastrophic failure (e.g., sudden loss of power of PCU-2) occurs, it is possible that no data at all will be saved by the PDFCS. In this case, a step-by-step-system initialization must be done.

**NOTE**

- Position data must be recorded prior to pressing ARRIVED key during emplacement. If time permits the crew should also set out collimator or select a DAP and set 3200 Deflection on the PANTEL on Center of Sector (Base Azimuth).
- To be able to react quickly to re-initialize a failed PDFCS, a Platoon SOP voice request procedure from crew to POC to send all required data messages from FDC may be helpful. Data that would be useful from FDC are: INITIALIZATION (Subscriber File, Map Mode, MET, Registration), MUZZLE VELOCITY, Current Position (to include Sector of Fire) and Propellant Temp (PIECE STATUS), SITE STATUS, and AMMO STATUS.

b. Getting Data. To return to Section in Order as fast as possible after a catastrophic failure of the PDFCS, return the tube to travel lock before shutting PDFCS power off. Wait about 5 seconds, then turn PDFCS power on. Begin the Initialization process as normal, working off the * menu items on the SETUP AND INFORMATION menus. If FDC has current data, get as much data as you can from FDC. This data can be obtained as follows:

(1) Box FDC DATA XFER on the SETUP AND INFORMATION menu and press SELECT key. The INITIALIZATION item under the GET column will be boxed as usual. Press YES to transmit the request for INITIALIZATION data (Subscriber File, Map Mode, MET and Registration).

(2) Next, box MUZZLE VELOCITY under the GET column and press SELECT key. Press YES key to transmit the request to FDC.

**NOTE**

The PDFCS automatically uses the Muzzle Velocity data sent by FDC. No further action is necessary by the crew.

(3) Repeat the last step for PIECE STATUS, SITE STATUS, and AMMO STATUS.

(4) Once all requests have been sent, press CANCEL key to move to the next initialization step on the SETUP AND INFORMATION menu.

# O-6 PDFCS INITIALIZATION - CONTINUED

## O-6.4 Initialization After a Catastrophic Failure - Continued

c. Nav Update.

(1) Use your current position data that you recorded upon emplacement.

(2) If POC has a current location where the failure occurred, use that data for navigation initialization. To use position data obtained from FDC in the step above, box NAV UPDATE on the SETUP AND INFORMATION menu, press SELECT key and a NAV SUBSYSTEM UPDATE menu will be displayed. Box GET FDC PRPT POSN and press SELECT key. Press USE ALL key, and PDFCS will use the FDC reported position data and return to the SETUP AND INFORMATION menu.

(3) Another howitzer with an operational DRUH and PDFCS can pull into failed howitzer's position (left hub to left hub) and provide navigation data to be entered on the keyboard.

**NOTE**

If no FDC-provided Move Order is expected after PDFCS initialization, then the Sectors of Fire must be changed to those provided by the FDC prior to the failure. Sector of Fire entries must be completed prior to inputting a manual Move Order.

(4) The failed howitzer can be taken to a surveyed point and navigation initialized from survey data.

d. Ammo Inventory. To use ammunition inventory data obtained from FDC in the step above, box AMMO INVENTORY on the SETUP AND INFORMATION menu, press SELECT key and INVENTORY MANAGEMENT menu will be displayed. Box EDIT FDC PROVIDED and press SELECT key. When the FINISHED key is pressed the ammunition inventory shall be reviewed to insure each group of projectiles has at least one propellant and each group of propellants has at least one projectile. If a projectile is found without a propellant or a propellant without a projectile, PDFCS will display PROJECTILE/PROPELLANT MISMATCH menu. Pressing the CONTINUE softkey on this menu will return operator to the INVENTORY MANAGEMENT menu, at which time the operator has to update SHELL/PROP inventory. On the next INVENTORY MANAGEMENT menu, press FINISHED to accept the FDC PROVIDED data. If you want to check the ammo inventory for accuracy, then box and select UPDATE SHELL, UPDATE PROP, and UPDATE FUZE one at a time (para O-6.2l(5)).

e. Site Definition. To use Site data obtained from FDC in the step above, box SITE DATA on the SETUP AND INFORMATION menu, press SELECT key and SITE DEFINITION menu will be displayed. Box GET FDC SITE and press SELECT key (This option will only be available if the POC has sent an AFU mask to the PDFCS). Press USE ALL, and the FDC provided Site Data will be used by the PDFCS.

## O-7 PDFCS TRAVEL MODE.

During the travel mode the navigation system provides a continuous position data display to the operator. The data displayed on the EL Panel will show UTM coordinates for both position and destination. Also included is a graphic display showing where the vehicle is traveling in relation to destination. After alignment, the PDFCS will automatically go into travel mode when the howitzer starts to move.

### O-7.1 Movement.

Once the howitzer has been initialized and the navigation system has had time to align, a CANCEL softkey will appear on the main menu. To view a SECTION IN ORDER AT INITIALIZATION POINT screen, press the CANCEL softkey.

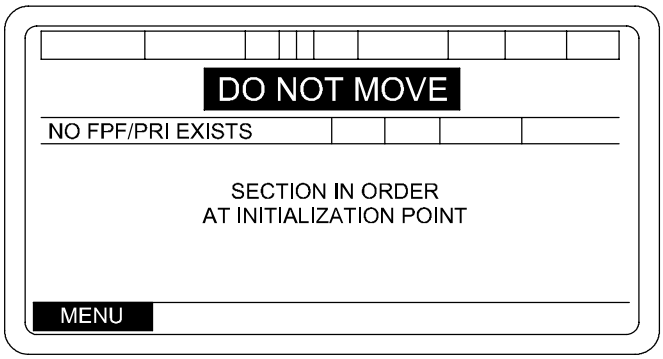


06pc148ma

**NOTE**

- DO NOT MOVE the howitzer until you see OK TO MOVE OR SHOOT, ACK message.
- You may then move the howitzer or accept fire missions, but you can expect ZUPT requests during moves if the ALN_ _ _S is still counting down.

O-7.1.1 Move Order. Upon receipt of a Move Order, an audio alert will sound and an OPERATOR ALERT and a STEERTO/EMPLACEMENT screen will automatically appear if the system display was at a SECTION IN ORDER screen. If the SET UP AND INFORMATION screen is displayed a MOVE ORDER alert will appear in field 3 of the screen, and an OPERATOR ALERT, “MOVE MISSION” “ACK”, will be displayed and the CANCEL softkey must be pressed to display the STEERTO/EMPLACEMENT screen. Once the vehicle has moved about 25 meters an audible and softkey alert “PRESS ACK WHEN TUBE STOWED” “ACK” will be displayed. Acknowledge the tube is stowed and press ACK softkey.

# O-7 PDFCS TRAVEL MODE - CONTINUED

## O-7.1 Movement - Continued

O-7.1.1 Move Order - Continued

STEERTO display screens:

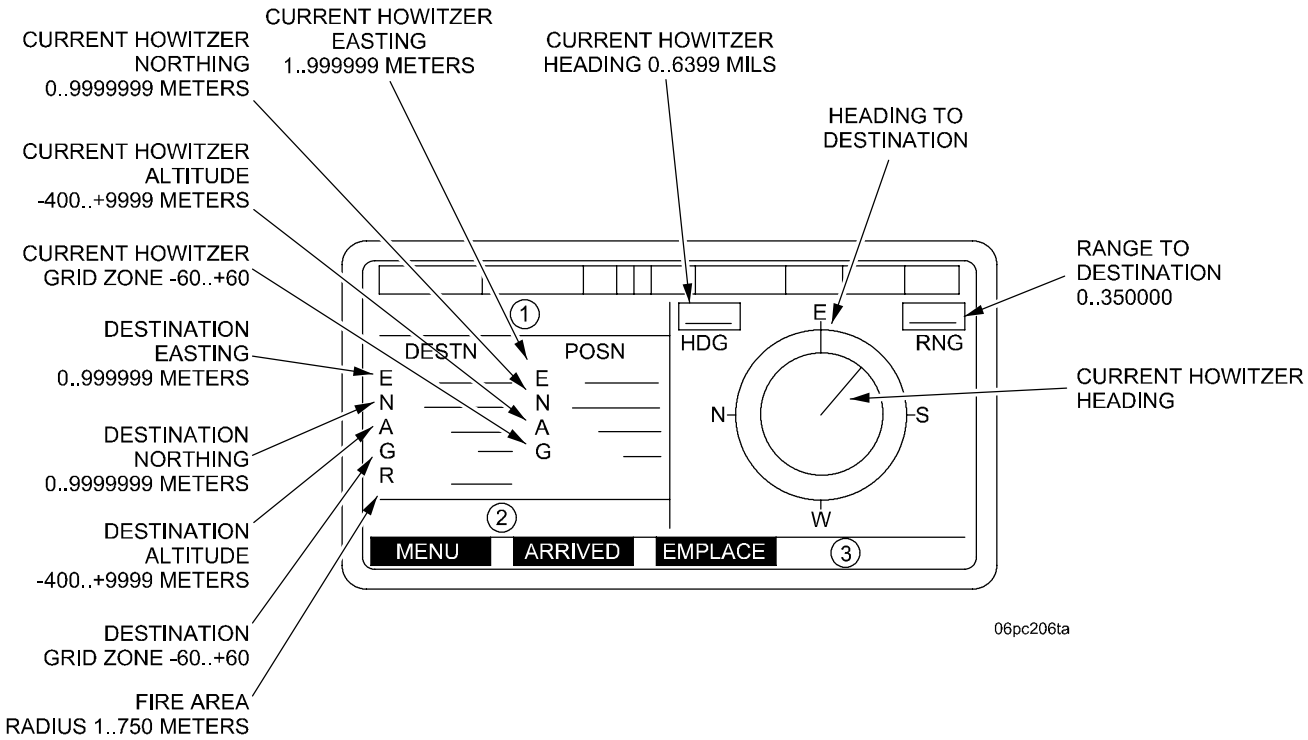


(1) "STEERTO FIRE AREA" - Destination is Fire Area
"STEERTO INIT POINT" - Destination is Initialization point
"STEERTO LOG POINT" - Destination is Logistics Point
"STEERTO FIRE POINT" - Destination is Fire Point

(2) "ORDERED MOVE IN PROGRESS"
"STOP MOVING AND WAIT"
"MOVE IN PROGRESS"
"NO AUTHORITY OR ORDERS TO MOVE"
"AWAITING START OF ORDERED MOVE"
"DO NOT START ORDERED MOVE"

(3) "ZUPT REQUIRED"
"NAV POS UPDATE REQUIRED"

# O-7 PDFCS TRAVEL MODE - CONTINUED

## O-7.1 Movement - Continued

O-7.1.1 Move Order - Continued

The STEER TO FIRE AREA screen contains the following:

a. MO - Describes Move Order status.

b. DESTN - Indicates destination coordinates: (E) Easting, (N) Northing, (A) Altitude, (G) Grid Zone, (R) Radius of operating area,

c. POSN - Indicates present howitzer position: (E) Easting, (N) Northing, (A) Altitude, (G) Grid Zone.

d. HDG - Howitzer's numerical heading in Mils (Azimuth).

e. RNG - Range to destination in radial distance.

f. Graphic Display - N, E, S, W on outer circle, indicates North, East, South and West and rotates like a compass. The line running from the center of display to edge of the inner circle indicates present vehicle heading. The line between the inner and outer circle indicates the desired heading. When these two lines are aligned, the vehicle is traveling toward destination.

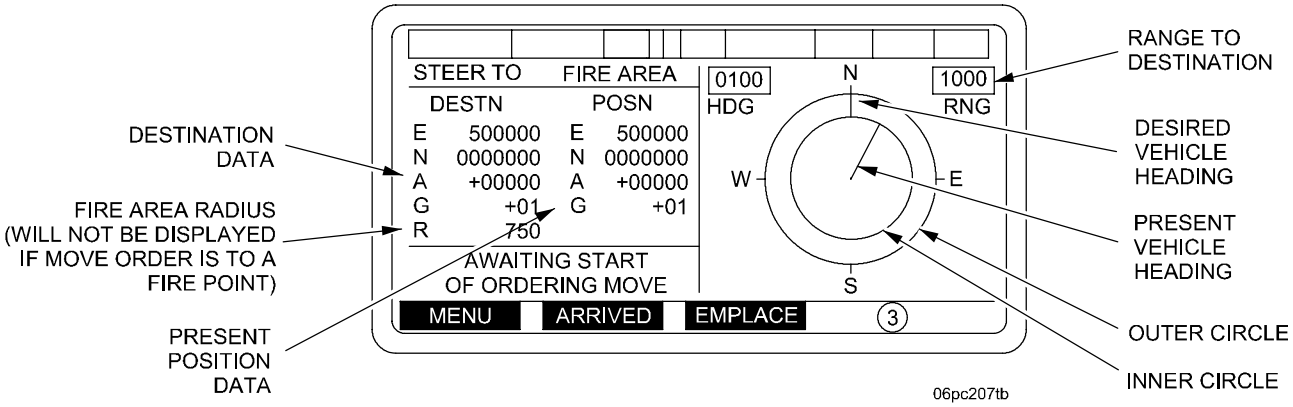

# O-7 PDFCS TRAVEL MODE - CONTINUED

## O-7.1 Movement - Continued

O-7.1.2 Moving. During movement of the howitzer, the STEER TO FIRE AREA screen will assist the operator in locating his destination. While the howitzer is on the move, the following will occur:

a. The graphic portion of the display will indicate the howitzer's movement by the outer circle of the display moving according to the vehicle heading. The line from center of the display to the inner circle will move as the howitzer changes directions.

b. The alphanumeric portion of the display under POSN will provide the operator with his current position constantly. The display above HDG will change as the howitzer changes headings and the display above RNG will change to indicate whether the movement is away from destination (increase) or toward destination (decrease).

c. Navigation system update may occur (zero velocity update) to maintain location accuracy.

O-7.1.3 Zero Velocity Updates. "Periodic Zero Velocity Updates (ZUPT) may be required if the VMS fails or is out, and the GPS is not valid. ZUPTs are required to increase the accuracy of the Navigation Subsystem. To insure proper Navigation Subsystem Operation and to maintain system performance accuracies, ALL Requested ZUPTs must be honored". When an update is required, the PDFCS will notify the operator with an audible alert and "ZPT" will appear in Field 6 and a softkey alert "ZUPT REQUIRED", "ACK". To accomplish a ZUPT, perform the following steps:

a. Stop the vehicle as soon as possible after the alert (the less time traveled between each ZUPT, the better the system accuracy).

b. Press ACK key to acknowledge operator alert.

c. Remain stopped until ZUPT is complete. ZUPT is done automatically during this period.

When the ZUPT is complete, another operator alert will be displayed, "ZUPT NO LONGER REQUIRED", "ACK". "ZPT" is no longer displayed in status line. Press ACK key, then vehicle movement can be continued.

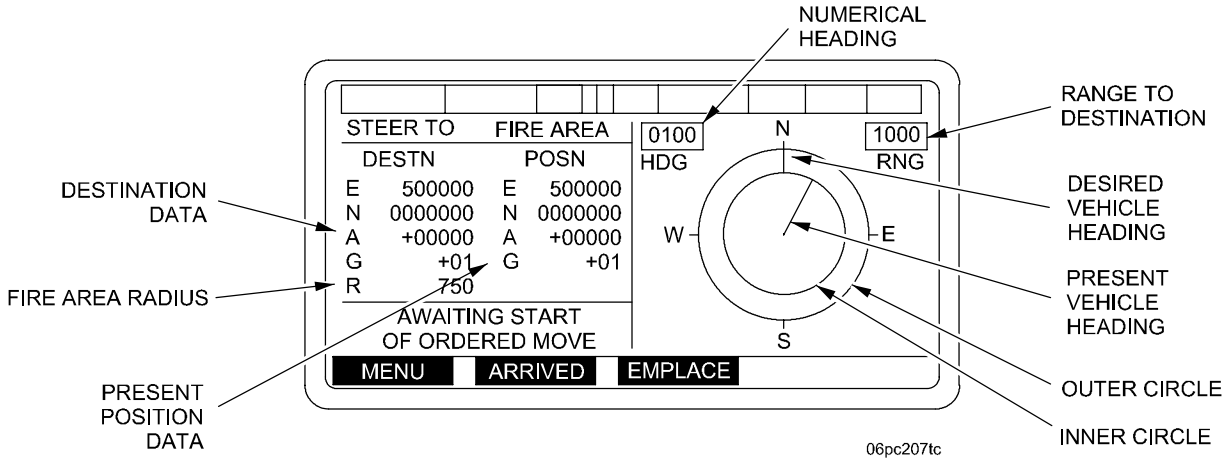

# O-7 PDFCS TRAVEL MODE - CONTINUED

## O-7.1 Movement - Continued

O-7.1.4 Moving with Navigation System Degraded. If a navigation system failure occurs while the howitzer is moving, the operator will be alerted visually with a NAVIGATE ON YOUR OWN TO DESTINATION display. The chief of section must use established navigation procedures to reach the destination shown. If only the DAGR is operational there will be no HDG information on the display.

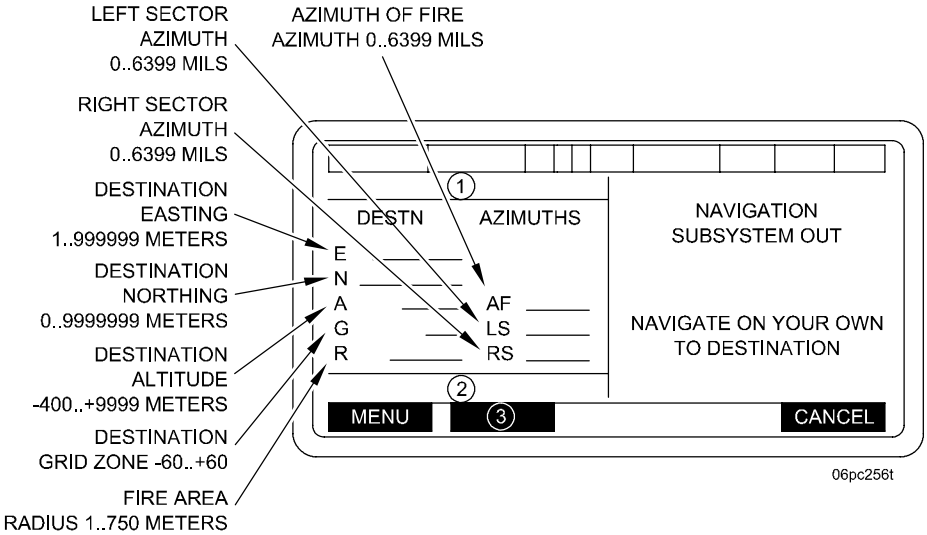


(1) "DEGRADED FIRE AREA" - Destination Is Fire Area

"DEGRADED INIT POINT" - Destination Is Initialization Point

"DEGRADED LOG POINT" - Destination Is Logistics Point

"DEGRADED FIRE POINT" - Destination Is Fire Point

(2) "ORDERED MOVE IN PROGRESS"

"STOP MOVING AND WAIT"

"MOVE IN PROGRESS"

"NO AUTHORITY OR ORDERS TO MOVE"

"AWAITING START OF ORDERED MOVE"

"DO NOT START ORDERED MOVE"

(3) MOVING softkey only appears when the Navigation System is DEGRADED or OUT. Press MOVING softkey after vehicle starts moving. Press ARRIVED key when vehicle has arrived at destination.

# O-7 PDFCS TRAVEL MODE - CONTINUED

## O-7.2 Emplacement Fire Point/Fire Area.

When the howitzer enters the radius the PDFCS will display the Emplacement at a FIRING AREA/POINT screen depending on type of MOVE ORDER received.

The EMPLACE FIRE POINT screen is also used for DESTINATION TYPES, INITIALIZATION POINT and LOGISTICS POINT emplacement.

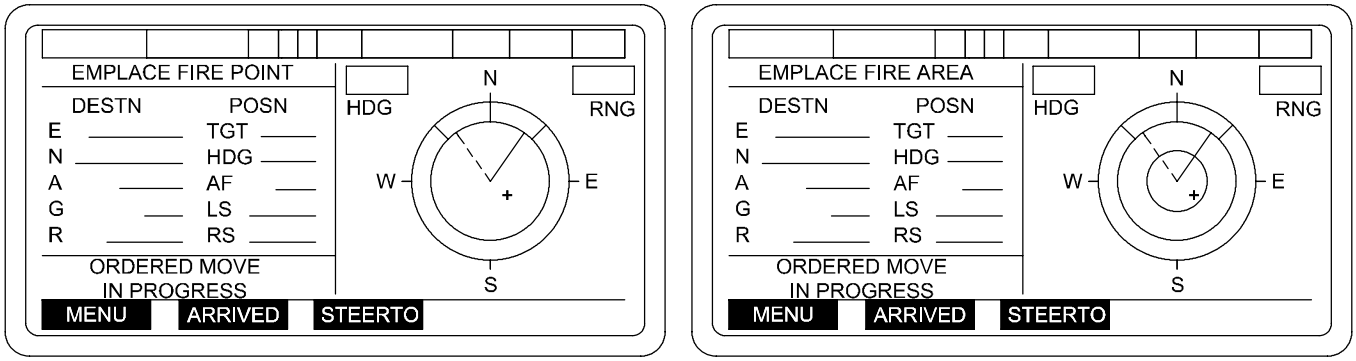


06pc257tb

# O-7 PDFCS TRAVEL MODE - CONTINUED

## O-7.2 Emplacement Fire Point/Fire Area - Continued

EMPLACE FIRE AREA Screen - The data on the EMPLACE FIRE AREA screen is the same as the STEER TO FIRE AREA screen with the following exceptions:

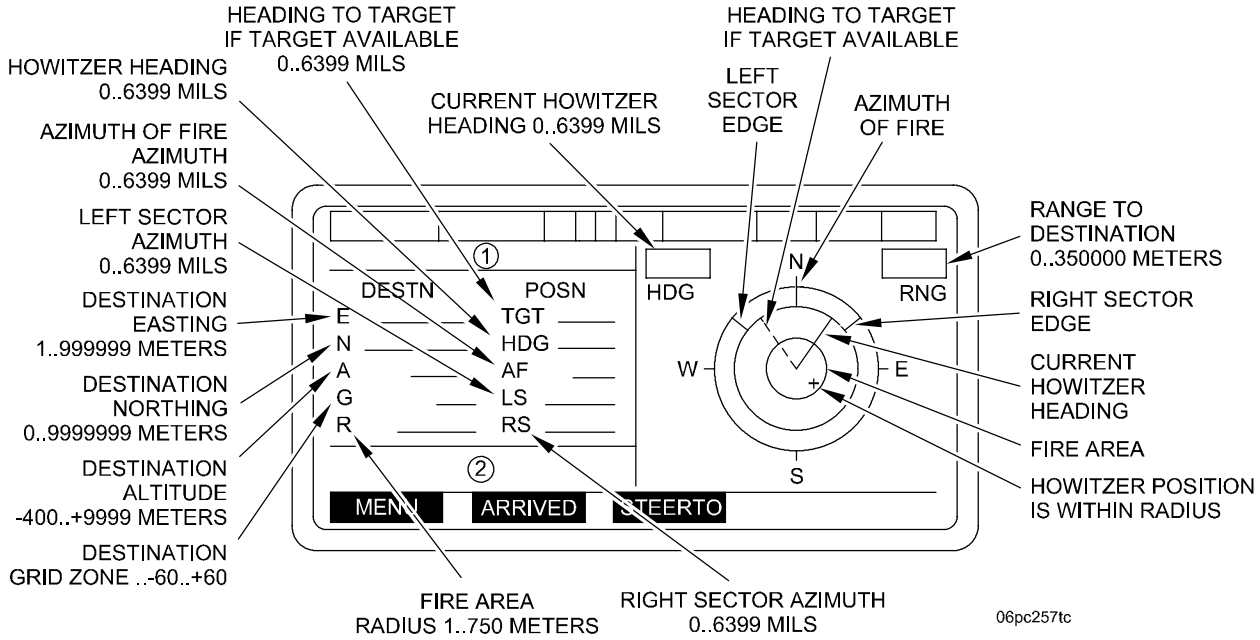


(1) "EMPLACE FIRE AREA" - Destination Is Fire Area
"EMPLACE INIT POINT" - Destination Is Initialization Point
"EMPLACE LOG POINT" - Destination Is Logistics Point
"EMPLACE FIRE POINT" - Destination Is Fire Point

(2) "ORDERED MOVE IN PROGRESS"
"STOP MOVING AND WAIT"
"MOVE IN PROGRESS"
"NO AUTHORITY OR ORDERS TO MOVE"
"AWAITING START OF ORDERED MOVE"
"DO NOT START ORDERED MOVE"

# O-7 PDFCS TRAVEL MODE - CONTINUED

## O-7.2 Emplacement Fire Point/Fire Area - Continued

a. Plus Sign - Represents the vehicle. When the vehicle is within the allowable move area assigned by the Platoon Operation Center (POC), the "+" will appear on the display. As the vehicle moves, the plus sign will also move, indicating direction of travel.

b. Inner Circle - Represents the Allowable Movement Area and will vary in size. This is determined by the radius of the Fire Area and is assigned by POC with a Move Order. This circle is an Emplacement Aid.

**NOTE**

- If EMPLACEMENT screen was accessed prior to arriving at next firing area the EMPLACEMENT screen may not display automatically.
- Once the vehicle is within the inner circle (shown by the + sign) the CHIEF OF SECTION may choose his emplacement position to take advantage of terrain features.

c. The line running from middle circle to outer circle between N and E represents Right Sector of Fire and the line between N and W represents Left Sector of Fire. The line under N represents Azimuth of Fire. The sector of fire is assigned by POC with the Move Order.

d. Solid Line - Represents the current heading. It extends from the center of the smallest circle to the edge of the middle circle. When this line is aligned with the line under the "N", the vehicle is travelling toward the ordered destination.

e. Dotted Line - Represents the gun-target line to a Final Protective Fire (FPF) target (if stored on PDFCS) and is designated by the POC.

f. Destination - Represented by the intersection of the solid line and the dotted line at the center of the smallest circle.

g. Azimuths - Display of azimuths in Mils to TGT (FPF target if one exists), HDG (present howitzer heading), AF (Azimuth of Fire), LS (Left Sector of Fire), RS (Right Sector of Fire).

O-7.2.1 Emplacing. Once the plus sign is within the designated firing area the howitzer has reached its destination. The howitzer is then maneuvered until vehicle heading (solid line from the center of the smallest circle to the edge of the middle circle) is aligned as closely as possible with the Azimuth of Fire Line (center solid line between the middle and outer circle). When these lines are aligned, the howitzer is roughly laid on the Azimuth of LAY.

**NOTE**

- DRUH position data improves approximately 30 seconds after the howitzer is stopped. The chief of section has the option of awaiting this time and then pressing the ARRIVED softkey to achieve optimum positioning data. However, this option should not be considered during an emergency fire mission (EMERGENCY MISSION).
- Before pressing ARRIVED key you must record your position data and Azimuth of Fire (Base Azimuth) in case the PDFCS fails.

# O-7 PDFCS TRAVEL MODE - CONTINUED

## O-7.2 Emplacement Fire Point/Fire Area - Continued

### NOTE - Continued

- If cab-side VMS modem is disconnected and position data is not available from the DAGR, the DRUH position data will degrade even though the howitzer is not moving. This data may degrade to the point where the navigation subsystem will be declared out.
- The softkey under ARRIVED on the MOVE ORDER screen must be pressed before the gun tube is unstowed from travel lock. This action establishes the TUBE STOW (travel lock) position. Pressing the STOW key will move the tube back to this azimuth.
- If EMPLACEMENT screen was accessed prior to arriving at next firing area the EMPLACEMENT screen may not display automatically.
- Once the vehicle is within the inner circle (shown by the + sign) the CHIEF OF SECTION may choose his emplacement position to take advantage of terrain features.
- When emplacing the howitzer, the Azimuth of Fire (Azimuth of LAY) from the Move Order is the azimuth the PDFCS holds as the “Base Azimuth” (the 3200 deflection reference position). This is the azimuth used by the PDFCS to compute ballistic data, and is also sent to the FDC in the PIECE STATUS (HOW: UPDATE) message for ballistic computations at the FDC.
- When emplacing at a FIRING POINT the howitzer range must be 50 meters or less. (Optimum 10 meters or less.)

Press the ARRIVED softkey on the EMPLACE FIRE AREA or Fire Point Site Definition screen to display a SITE DEFINITION screen. Take the tube out of travel lock.

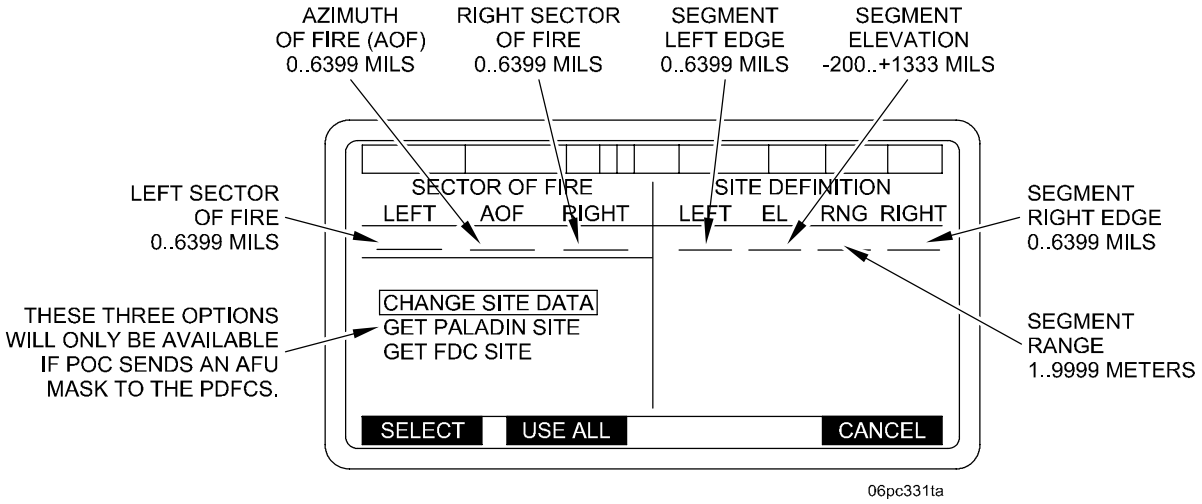


Automatic selection boxing will occur starting from field LEFT and then continuing from LEFT to RIGHT, to field EL RNG and RIGHT, after each previous entry has been ENTERED.

# O-7 PDFCS TRAVEL MODE - CONTINUED

## O-7.2 Emplacement Fire Point/Fire Area - Continued

O-7.2.2 SITE DATA. Identifies left and right limits, range and elevation in mils, and is used to ensure that all rounds clear crests within the howitzer's SECTOR OF FIRE. Up to eight sets of site definition data can be entered. Site definition data is determined using the same procedures as SITE TO CREST (sighting through the cannon tube). This data is entered using the SITE DEFINITION screen as follows:

a. Obtain SECTOR OF FIRE data from POC. Normally Azimuth of Fire, Left and Right Sector limits will be provided by the POC in the Move Order and will be displayed automatically on the SITE DEFINITION menu on the left side of the screen under LEFT AOF RIGHT headings.

b. Press the DELETE key to remove SITE DATA from previous occupation. Box in limit under column to be changed and press the SELECT key.

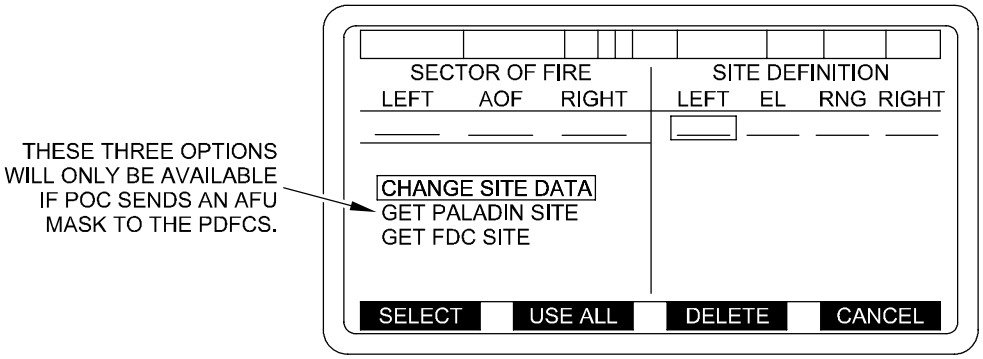


06pc332t

c. One Line SITE DATA (For Initial Occupation). Pressing the ARRIVED key, the COS must obtain One Line SITE DATA. After removing the gun tube from the travel lock, the COS brings the cursor box to the left limit and presses SELECT, then traverses the gun tube to the left while monitoring the Azimuth readout until he reaches at least one mil beyond the Left limit, then presses ENTER. While the GUNNER sights through the gun tube, the COS elevates or depresses the gun tube to obtain immediate crest. COS brings the cursor box to the Right limit and presses SELECT, then COS traverses the gun tube to the Right limit while the GUNNER sights through the gun tube. COS elevates gun tube upon the COMMAND "Elevate" from the GUNNER when the GUNNER needs to clear an obstruction until the COS reaches the Right limit while monitoring the Azimuth readout, then presses ENTER. Before moving the gun tube, COS then cursors to the entry under EL, presses SELECT and ENT to obtain elevation to immediate Crest. COS then cursors to entry under Range, presses SELECT and ENT and inputs RANGE TO CREST from the numeric PDFCS keypad and presses ENT. Upon completion of One Line SITE DATA the COS then presses USE ALL to input MIN QE.

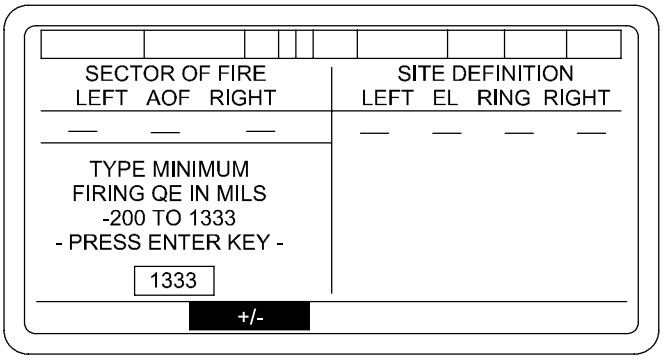


06pc215ta

# O-7 PDFCS TRAVEL MODE - CONTINUED

## O-7.2 Emplacement Fire Point/Fire Area - Continued

O-7.2.2 Site Data - Continued

Pressing the ENTER key will display SECTION IN ORDER menu. During NORMAL OPERATIONS the last value entered shall be displayed.

d. MINIMUM QUADRANT ENTRY. Upon completion of One Line SITE DATA, press USE ALL and a display will appear in the left side of the SITE DEFINITION screen. Enter the MIN QE obtained from the POC for the current position. Upon voice verification of the MIN QE with the POC, press the ENT key. This will display the SECTION IN ORDER at FIRING AREA/POINT screen.

e. Send piece status to POC.

**NOTE**

COS will obtain MAX QE and send updated piece status to POC (see para O-8.7.3).

O-7.2.2.1 SITE DEFINITION screen display. With the GUNNER sighting through the tube the COS elevates or depresses the gun tube to obtain immediate Crest. COS traverses right while the GUNNER looks through the gun tube. When an obstruction appears, data for the Left limit SITE DEFINITION can be entered by pressing the ENT key. The SITE DEFINITION screen with Left Azimuth will be displayed. Perform steps d and e to establish 6400 mils SITE DEFINITION.

**NOTE**

This procedure is conducted as part of Position Improvement.

# O-7 PDFCS TRAVEL MODE - CONTINUED

## O-7.2 Emplacement Fire Point/Fire Area - Continued

O-7.2.2 Site Data - Continued

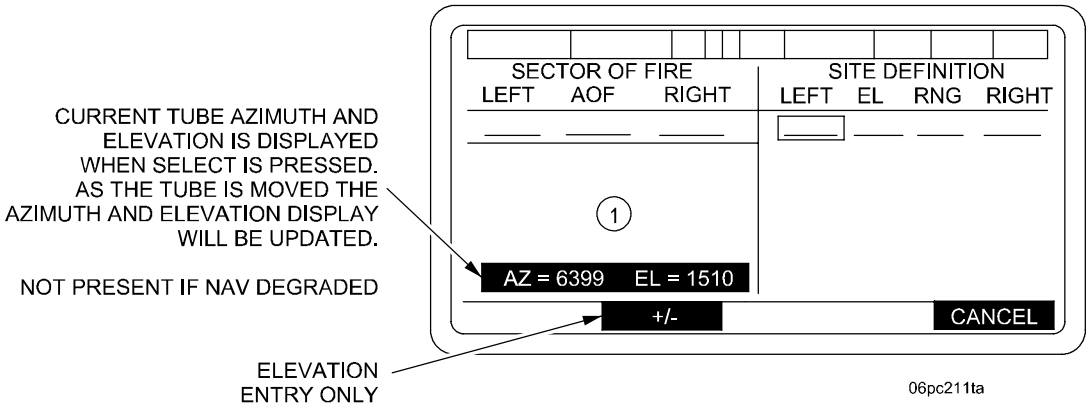


(1) THE FOLLOWING PROMPTS ARE DISPLAYED DEPENDING ON WHICH FIELD IS SELECTED:

| | |
|---|---|
| **WHEN "LEFT" IS SELECTED**<br>MOVE TUBE OR TYPE<br>LEFT EDGE OF SITE<br>IN MILS:<br>0 TO 6399<br>-PRESS ENT KEY- | **WHEN "EL" IS SELECTED**<br>MOVE TUBE OR TYPE<br>ELEVATION OF SITE<br>IN MILS:<br>-200 TO 1333<br>-PRESS ENT KEY- |
| **WHEN "RNG" IS SELECTED**<br>TYPE RANGE TO SITE<br>IN METERS:<br>1 TO 9999<br>-PRESS ENT KEY- | **WHEN "RIGHT" IS SELECTED**<br>MOVE TUBE OR TYPE<br>RIGHT EDGE OF SITE<br>IN MILS:<br>0 TO 6399<br>-PRESS ENT KEY- |

**NOTE: MASK HEIGHT CANNOT EXCEED 10,000 METERS, THEREFORE:**

(A) UPPER LIMIT ON RANGE WILL CHANGE DEPENDING ON CURRENT MASK ELEVATION

(B) UPPER LIMIT ON ELEVATION WILL CHANGE DEPENDING ON CURRENT MASK RANGE

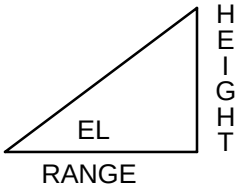


**NOTE: WHEN CURRENT TUBE POSITION IS USED TO SET MASK ELEVATION:** IF THE RANGE FIELD CONTAINS AN ENTRY WHICH RESULTS IN A MASK EXCEEDING 10,000 METERS, THE RANGE FIELD WILL BE RESET TO THE MAXIMUM ALLOWED VALUE AND THE FOLLOWING MESSAGE WILL BE DISPLAYED: **"WARNING - RANGE SET TO MAXIMUM", "ACK"**

Automatic selection boxing will occur starting from field LEFT and then continuing from LEFT to RIGHT, to field EL, RNG, and RIGHT, after each previous entry has been ENTERED.

# O-7 PDFCS TRAVEL MODE - CONTINUED

## O-7.2 Emplacement Fire Point/Fire Area - Continued

O-7.2.2 Site Data - Continued

a. Select column (LEFT) to display left limit SITE DEFINITION screen. Data for this limit can be typed in, or use tube position. Enter data by pressing ENT key.

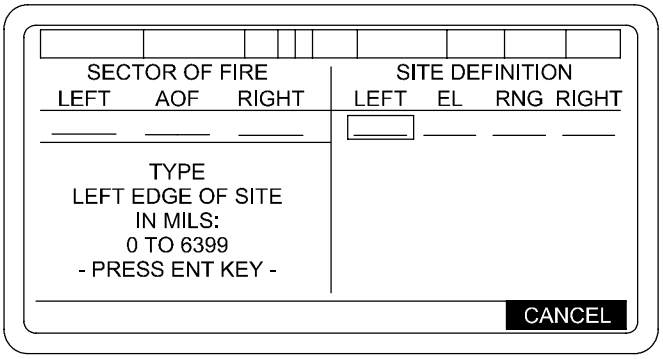


06pc329t

**NOTE**

- Numerical value must be entered before sign. Default sign is (+).
- Upper limit on elevation will change depending on current mask range. If range is blank, default shall be 1333.

b. Select next limit column (EL) to display Elevation SITE DEFINITION screen. Enter elevation data in the same manner as left limit (type in data or use gun tube position). If elevation is below zero, press +/- key to place minus sign in front of numbers to be entered (used only when typing in data). Press ENT key.

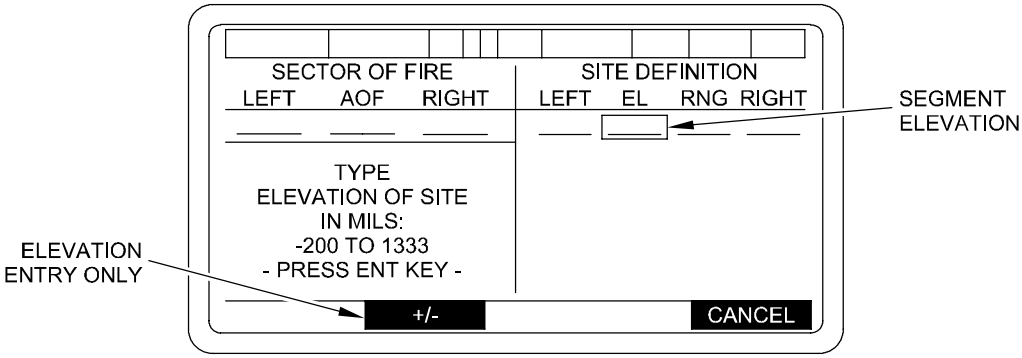


06pc330ta

# O-7 PDFCS TRAVEL MODE - CONTINUED

## O-7.2 Emplacement Fire Point/Fire Area - Continued

O-7.2.2 Site Data - Continued

**NOTE**

Upper limit on range will change depending on current mask elevation. If elevation is blank, default shall be 9999.

c. Select next limit column (RNG) to display the Range SITE DEFINITION screen. Enter range to crest and press ENT key. (Data for this must be typed in; gun tube position cannot be used.)

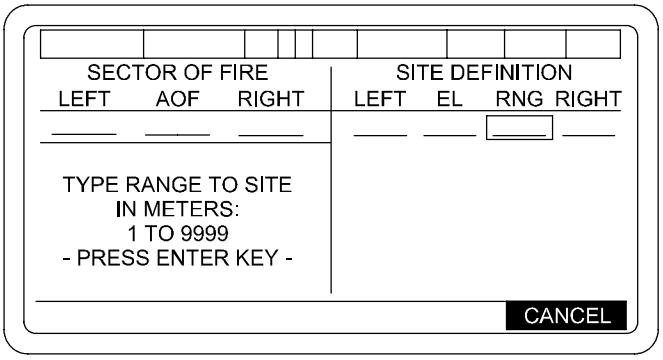


06pc334t

d. Select next limit column (RIGHT) to display the right limit SITE DEFINITION screen. Data for this limit can be typed in, or use tube position. Enter data by pressing ENT key.

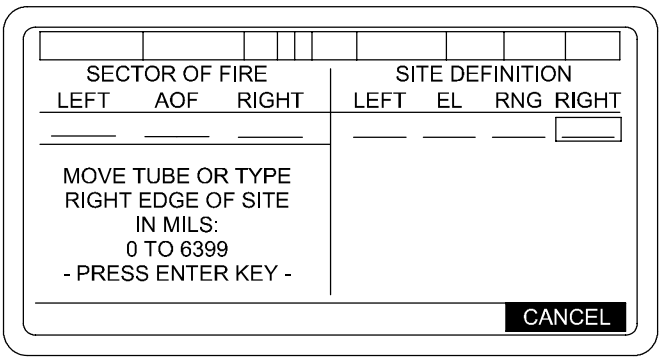


06pc335t

e. Using arrow key, move cursor box to next available line and to the left and identify next obstruction. Sequence can be repeated as many as seven times if needed.

f. When all data has been entered, press USE ALL key.

O-7.2.3 Section In Order. When all data is correct, press ENTER key. This will bring up a SECTION IN ORDER WITHIN FIRE AREA or SECTION IN ORDER AT FIRE POINT screen depending on whether the Move Order was a move to a FIRE AREA or FIRE POINT. An ordered move of any other type would be indicated as such in field 11 of the menu.

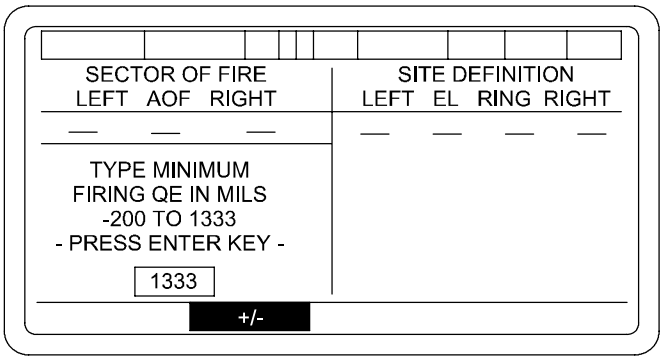


06pc215ta

# O-7 PDFCS TRAVEL MODE - CONTINUED

## O-7.2 Emplacement Fire Point/Fire Area - Continued

O-7.2.3 Section In Order - Continued

### NOTE

- See Table O-4 in Section O-4 (PDFCS Operating Controls and Indicators) for instructions and warnings which could appear on the SECTION IN ORDER display.
- When SECTION IN ORDER screen is displayed, the commanded deflection (CMD DEFL) may be either: 1) the Azimuth of Fire (Azimuth of LAY) from the Move Order, expressed at 3200 deflection. Since this is also the "Base Azimuth" position (the difference between the 3200 reference and the ordered Azimuth of LAY); or 2) if a Final Protective Fire (FPF) or Priority (PRI) target has been designated by the POC, the CMD DEFL will be the deflection from "Base Azimuth" to the FPF; or 3) when a Manual Move Order has been done, the CMD DEFL is the default Azimuth of Fire (Base Azimuth) entered upon initialization.
- LOAD/LAY and STOW will not be displayed unless the gun switch is in the ON position.

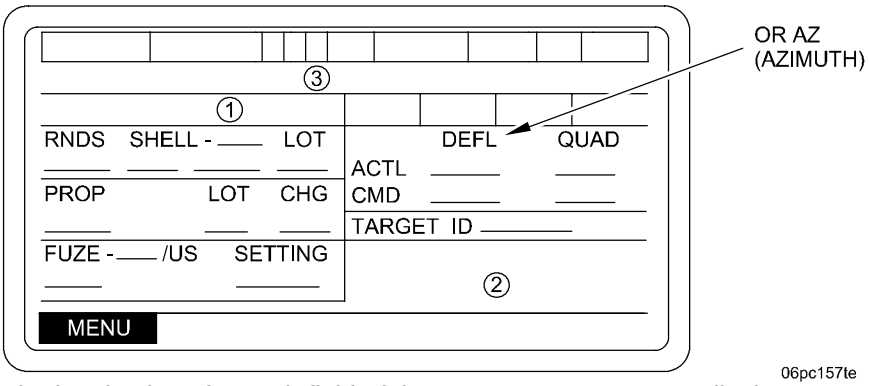


Listed below are the legal values for each field of the SECTION IN ORDER display:

RNDS = Number of rounds remaining to fire 0..99 or blank
SHELL = Shell model only (see Table O-6) or blank
SHELL LOT = A..Z or blank
PROP = Propellant model (see Table O-6) or blank
PROP LOT = A..Z or blank
PROP CHG = Propellant charge designator (see Table O-6) or blank
FUZE = Fuze model only (see Table O-6) or blank
FUZE SETTING = Computed fuze setting, "PD" or "DELAY".
DEFL (or AZ) = 0.0..6399.9 mils
QUAD = -200.0..+1600.0 mils
TARGET ID = FPF/PRI target identification if a target exists; otherwise blank

# O-7 PDFCS TRAVEL MODE - CONTINUED

## O-7.2 Emplacement Fire Point/Fire Area - Continued

O-7.2.4 Establish Distant Aiming Point or Set Collimator Per Unit SOP.

**NOTE**

If time permits, the crew should set out collimator or select a DAP and set the PANTEL with the tube "Base Azimuth". If this is not possible immediately, traverse back to "Base Azimuth" using one of the following procedures based on the conditions indicated on the SECTION IN ORDER screen.

a. Use this procedure when the CMD DEFL reads 3200 deflection and there is no FPF nor PRIORITY (PRI) target displayed on the SECTION IN ORDER screen. Under these conditions, CMD DEFL is using the Azimuth of Fire (Base Azimuth). To move the tube to Base Azimuth, 1) Turn on hydraulic power, 2) Set GUN SERVO switch to ON, and 3) Press/hold the LOAD key until the LOAD indicator is highlighted in the upper right corner of the screen. Tube is now laid on Azimuth of Fire (Base Azimuth) and both the ACTL DEFL and CMD DEFL should read 3200.4) Sight onto the Collimator or the DAP and set 3200 Deflection on the PANTEL.

b. Use this procedure when the CMD DEFL shows a deflection other than 3200 and there is either an FPF or PRIORITY (PRI) target displayed on the SECTION IN ORDER screen. The CMD DEFL is the Firing Azimuth for the FPF/PRI target, so the LOAD key cannot be used to move the tube to 3200 deflection. Under these conditions, 1) use the Hydraulic Power Handle Controls to traverse the tube until the ACTL DEFL reads 3200 deflection. Tube is now laid on Center of Sector (Base Azimuth). 2) Sight onto the Collimator or the DAP and set 3200 Deflection on the PANTEL.

**NOTE**

If the PDFCS fails, use the Azimuth of Fire recorded during emplacement as Azimuth of LAY (Base Azimuth) and use reciprocal lay procedures with the aid of an operational howitzer.

O-7.2.5 Final Laying of Gun Tube at FIRING AREA. It is necessary to lay the gun tube on the Azimuth of Fire (from MOVE ORDER) or the FPF/PRI azimuth/deflection. The SECTION IN ORDER screen will show a difference between the ACTL DEFL and the CMD DEFL. The ACTL and CMD values must be the same for the gun tube to be layed. To accomplish this: 1) set GUN SERVO switch to ON, and 2) depress and hold LOAD key (para O-4). The gun will traverse to the CMD DEFL (match ACTL and CMD) and to the LOAD ELEVATION stored at initialization. When the LOAD indicator is highlighted, release the LOAD key.

## O-8 PDFCS FIRE MISSION.

Fire missions are usually generated as a result of a message from the FDC to the PDFCS. Included in the message are target location, method of control, and ammunition to fire (if ammunition is not specified the PDFCS will default to its own selection). When the message is received by the PDFCS, a FIRE MISSION display is displayed on the PDU and an audible alert is sounded through the intercom system. The Ballistics Computer will then compute the ballistics (azimuth and quadrant), based on ammunition data (projectile, propellant, and fuze), target location and the location of the howitzer (provided by the navigation system). The ballistic solution is then displayed on the FIRE MISSION display.

A typical FIRE MISSION display contains the following:

**WARNING**

**The crew compartment must be adequately ventilated during all firing using the LEAD PARTICULATE FILTER or ventilation system in accordance with para 2-22.2.**

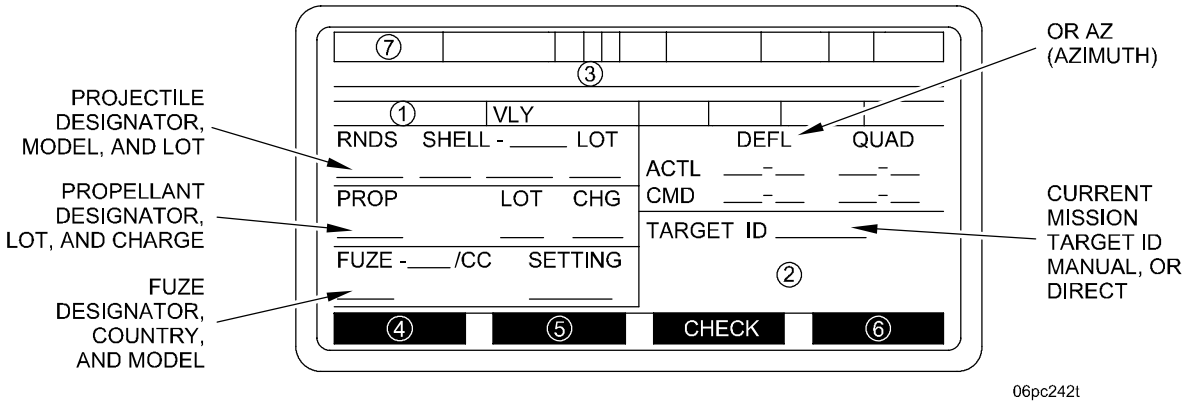


Listed below are the legal values for each field of FIRE MISSION display.

VLY / = Current volley being displayed; 1/1, 1/2 or 2/2

**NOTE**

The 1/1, 1/2, and 2/2 data shall not be displayed for direct or FDC Fire Commands fire missions.

VLY / = current volley being displayed: 1/1, 1/2 or 2/2
RNDS = Number of rounds remaining to fire 1..99 or blank
SHELL = Shell model only (see Table O-6) or blank
SHELL LOT = A..Z or blank
PROP = Propellant model (see Table O-6) or blank
PROP LOT = A..Z or blank
CHG = Propellant charge designator (see Table O-5) or blank
FUZE = Fuze model only (see Table O-6) or blank
FUZE SETTING = Computed fuze setting, “PD” or “DELAY”.
FUZE = Fuze model only (see Table O-6) or blank
DEFL or AZ = 0.0..6399.9 mils or blank
QUAD = −200.0..+1600.0 mils or blank
TARGET ID = Current mission target identification

## O-8 PDFCS FIRE MISSION - CONTINUED

Instructions and warnings which could appear on the FIRE MISSION display:

See Table O-2 in Section O-4 (PDFCS Operating Controls and Indicators) for instructions and warnings which could appear on the FIRE MISSION display.

### NOTE

- If the projectile is an XM982 or M982 and successfully set the EPIAFS, then the Paladin will display the SHELL, SHELL LOT, Fuze Setting (PD, DLY, VT) in normal video and Shell expiration time (420-0 seconds) in inverse video.
- A type 2 audio alert will sound and the message “PRESS LOAD THEN READY” “ACK” will appear if the fire mission is an XM982 or M982 and the Method of Control is DNL.
- Selecting “PRESS LOAD THEN READY” “ACK” will cause the READY softkey to appear.

The following alerts shall appear if the operator presses the LOAD or LAY keys and the tube transitions across the minimum quadrant elevation:

MINIMUM QE VIOLATED ACK

The Gun Tube has violated the minimum QE as entered by the PDFCS operator in the Enter Minimum Firing QE Display. A type 2 audio alert will sound until the ACK key is pressed.

MINIMUM QE NO LONGER VIOLATED ACK

The Gun Tube no longer violates the minimum QE as entered by the PDFCS operator in the Enter Minimum Firing QE Display. A type 2 audio alert will sound until the ACK key is pressed.

Fire Mission Received. When displayed, press ACK to confirm receipt of fire mission.

# O-8 PDFCS FIRE MISSION - CONTINUED

## O-8.1 Platoon Operation Center.

Although the howitzer has the ability to compute its own firing data, the actual firing of a mission is controlled by the POC. The control method is included within the fire mission message and displayed on the FIRE MISSION screen. Control methods are as follows:

a. AT MY COMMAND. In this method, the POC controls when the howitzer is fired. (An example is a normal Copperhead mission.) The Method of Control field of the FIRE MISSION screen will tell the COS to LOAD, LAY, then press READY key. When these are accomplished, a message that the howitzer is ready to fire is sent to the POC. When the FIRE COMMAND is issued by the POC, an audible alert and an alternating tone is sounded and a FIRE prompt is displayed. If more than one volley is to be fired, the other volleys will be FIRE WHEN READY.

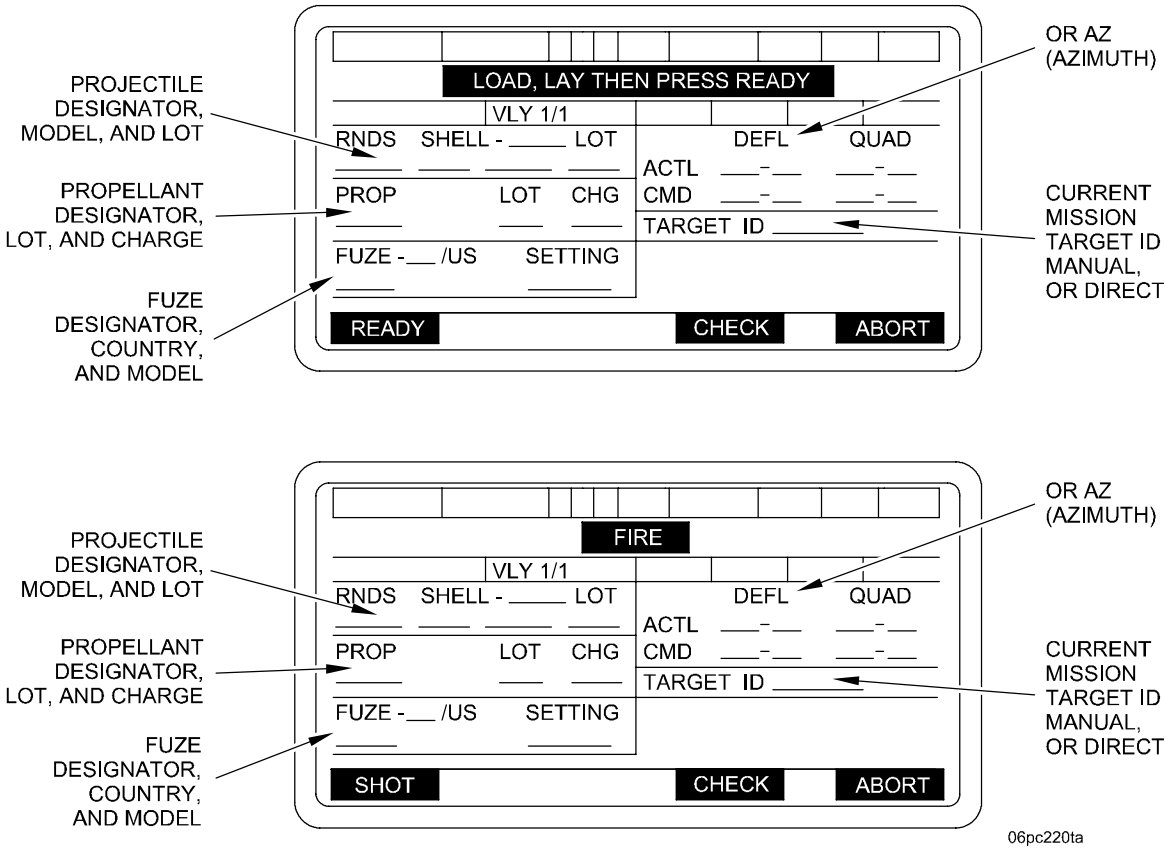

# O-8 PDFCS FIRE MISSION - CONTINUED

## O-8.1 Platoon Operation Center - Continued

b. DO NOT LOAD. This is a restrictive command that prohibits loading and firing. This is used when it is anticipated that significant time will elapse between loading and firing. When the DO NOT LOAD command is canceled, then the FIRE command is issued, and the same audible and visual alerts will be received as in AT MY COMMAND.

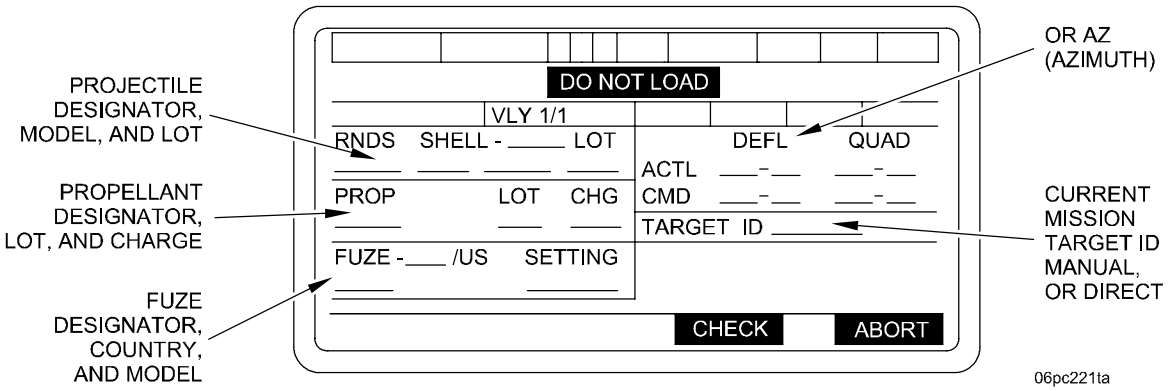


c. TIME TO FIRE (TTF) SEQUENCE. This sequence consists of the following:

(1) Ballistic sequencing is performed. (COMPUTING DO NOT LOAD)

(2) If no ABORT is performed during the ballistic sequencing the PDFCS operator is given the data.

(3) The PDFCS operator is told to “WAIT FOR XXX SECONDS” where xxx is the number of seconds remaining until time to fire.

(4) The “WAIT FOR XXX SECONDS” prompt is updated each second.

(5) When the countdown has expired, the PDFCS operator is told to “FIRE”.

(6) If this is not a FPF mission, then when the first shot out is detected, and there is a Continuous Fire Interval specified, processing continues using the Continuous Fire Interval sequence. If there are more rounds to fire, and a Continuous Fire Interval is not specified, the PDFCS operator is told to “FIRE WHEN READY” (similar to when ready sequencing subsequent rounds). Otherwise, if shot out is not detected within 20 seconds then the mission is automatically ended.

If this is a FPF mission, then when shot out is detected the PDFCS operator is told to “FIRE WHEN READY” again. This is repeated until the mission is ended and no rounds complete is generated.

(7) When rounds complete is detected the mission is automatically ended.

d. CONTINUOUS FIRE INTERVAL SEQUENCE. The Continuous Fire Interval sequence shall be as follows for the second and subsequent rounds in a mission where a continuous fire interval is specified.

(1) Following the first round fired using the sequences described above, the operator shall be told to “WAIT FOR XXX SECONDS” where xxx is the number of seconds remaining until time to fire.

(2) The “WAIT FOR XXX SECONDS” prompt shall be updated each second.

(3) When the countdown has expired, the operator is told to “FIRE”.

(4) If all rounds in the mission have not been shot, processing will sequence through steps 1, 2, and 3 above.

(5) When rounds complete is detected, the mission is automatically ended.

## O-8 PDFCS FIRE MISSION - CONTINUED

### O-8.2 Firing Mission.

**WARNING**

**The crew compartment must be adequately ventilated during all firing using the LEAD PARTICULATE FILTER or ventilation system in accordance with para 2-22.2.**

**WARNING**

**LEAD PARTICULATE AND FUMES HAZARD**

- The adverse effects associated with exposure of lead range from acute to relatively mild. The symptoms of severe lead intoxication include loss of appetite, metallic taste, constipation, nausea, pallor, excessive tiredness, weakness, insomnia, headache, nervous irritability, muscle and joint pains, fine tremors, numbness, dizziness, hyperactivity, and colic.
- The following precautions must be observed to ensure safety of personnel during routine and combat conditions.
- **BE ALERT** during all firing missions for exposure symptoms. If symptoms of lead intoxication are suspected, **IMMEDIATELY** ventilate vehicle. If symptoms persist, remove affected personnel from vehicle and treat as follows: Expose to fresh air, keep warm, do not permit physical exercise. (Consult FM 4-25.11, “First Aid for Soldiers”, for additional instruction.) A physician should be consulted within 24 hours.

**WARNING**

Individual exposure shall be limited to a maximum firing dosage of 13 M119 charges or six M203 charges per 24 hour period. If firing dosage will exceed these limits, MCS operation with the M25A1 face mask is required.

When a fire mission is received, visual as well as an audible alert is given. The visual alerts are FIREMSN in Field 2 and OPERATOR ALERT AND ACK display. The audible alert can be heard by all crewmembers. When a fire mission is in process, each crewmember will perform his portion of the following:

a. GUNNER and CANNONEER stow seats (if not previously stowed).

# O-8 PDFCS FIRE MISSION - CONTINUED

## O-8.2 Firing Mission - Continued

b. Driver starts engine and/or raises idle speed to 1000-1200 rpm.

c. COS issues the fire order (for example, 1 round HE; charge 4 green bag; Fuze Time, Time 25.0) and activates the HYDRAULIC POWER switch on the hydraulic control box and the GUN SERVO switch on the PDU.

d. Cannoneer turns LEAD FILTER switch on the Accessory Control Box to ON and moves Vent Duct Control Handle into UP position.

e. GUNNER opens breech (first round only).

f. CANNONEER positions rammer to RAM position.

g. GUNNER prepares propellant (charge/zone taken from bustle stowage).

h. CANNONEER prepares projectile and fuze (sets time on fuze if necessary).

i. COS verifies projectile, fuze, fuze time and propellant and depresses LOAD key on PDU (if necessary).

j. When the tube is in the LOAD position, the CANNONEER places the projectile on the ram tray and activates rammer.

k. When the ramming cycle is complete, the CANNONEER places the rammer in the stowed position.

l. GUNNER places propellant in powder chamber and closes breech.

**NOTE**

When the PDFCS has laid the gun and the LAY key is highlighted the gun must stay within +/- 0.9 mils of the commanded deflection.

m. The COS presses and holds the LAY key on the PDU until the cannon is laid on the COMMAND FIRING data.

n. COS ensures that the gun is in the LAY position by verifying and announcing LAY light is highlighted (ACTUAL and COMMANDED DEFLECTION) and QUADRANT is within tolerance (+/- 0.9) and the prompt “WARNING TUBE IS NOT IN LAY POSITION” is no longer displayed.

o. GUNNER verifies LAY data. If data is correct GUNNER will announce “Verified”. (If data is incorrect GUNNER will announce “Check firing”).

p. COS gives the command to “PRIME”.

**NOTE**

During high angle missions or illumination missions, it is recommended prime be done at load elevation.

q. COS commands “Hookup”, CANNONEER attaches lanyard to firing block and announces “Hookup”.

r. COS announces, “FIRE”.

**NOTE**

If the Navigation Subsystem or PMVS are out, the PDFCS will not detect the shot, and COS must press the SHOT softkey after each round.

s. CANNONEER pulls the lanyard to fire the round.

t. The PDFCS is capable of automatically detecting Shot. In most cases pressing the SHOT softkey is not required. When a round is fired, the Navigation Subsystem and PMVS will detect the round. After the round is fired and detected by the PDFCS, the SHOT softkey will automatically disappear for 5 seconds, the Fire Mission will automatically decrement by one round (i.e. rounds to complete mission will decrease by one), and the Ammo Inventory will automatically be adjusted. In the very rare case that the PDFCS does not detect shot, the COS must press the SHOT softkey as before.

# O-8 PDFCS FIRE MISSION - CONTINUED

## O-8.2 Firing Mission - Continued

u. Cannoneer turns on Personnel Fan (Exhaust) switch on the Accessory Control Box and moves the Vent Duct Control Handle into DOWN position. Operate Personnel Fan for 1-2 minutes until all fumes are exhausted.

O-8.2.1 Subsequent Rounds. The first procedure is also used for all subsequent rounds in a fire mission. When all rounds have been fired for the mission, a VERIFY EXPENDED AMMO screen will be displayed. Ammunition accountability is covered in para O-8.3.

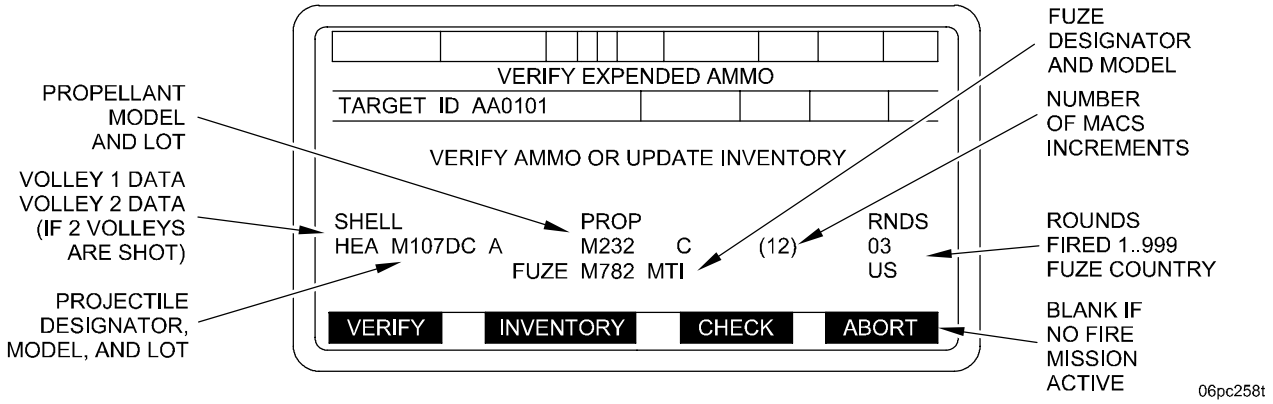


## O-8.3 Ammunition Accountability.

### NOTE

- If a shell, fuze or propellant is entered in the PDFCS inventory, but the quantity is insufficient for the mission, or zero, the PDFCS will prompt the Chief of Section to accept or reject the mission (in case a new load of ammunition just arrived and has not been entered into inventory yet).
- If a fire mission is activated while you are in any of the inventory management menus, all completed entries will be saved automatically.

It is essential that accurate ammunition updates to the PDFCS be done in order to be able to fire all missions received. This should be done after a mission is fired. When all rounds in a mission have been fired, a VERIFY EXPENDED AMMO screen is displayed. This screen asks the operator either to verify ammunition fired or to update the ammo inventory. This is accomplished as follows:

a. If the ammunition shown in the lower part of the VERIFY EXPENDED AMMO screen is an accurate account of the ammunition fired, press VERIFY key, to update the ammunition count. This updates the PDFCS ammunition count automatically.

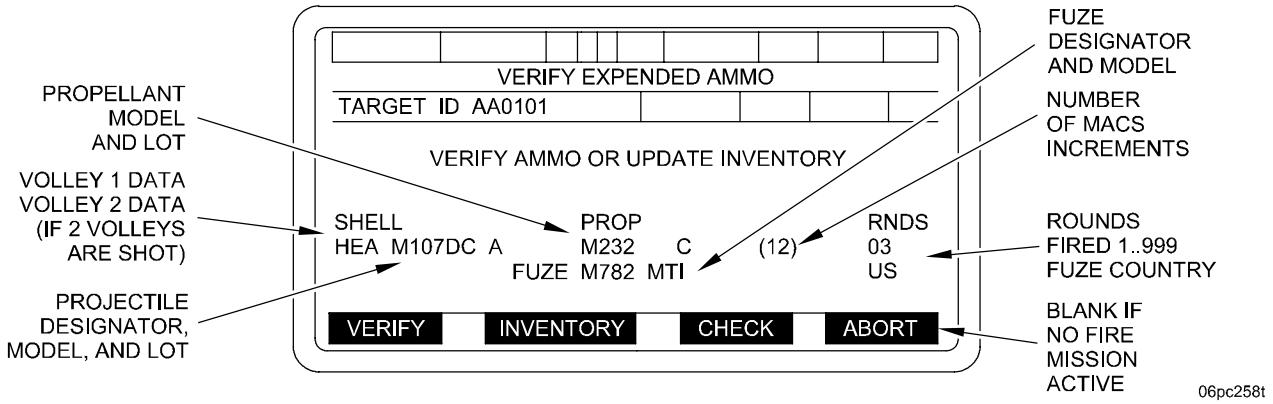

# O-8 PDFCS FIRE MISSION - CONTINUED

## O-8.3 Ammunition Accountability - Continued

b. If the ammunition shown on the VERIFY EXPENDED AMMO screen is not an accurate account of ammunition fired (for example, a compatible fuze was used as a substitute for the fuze specified in the mission), press the INVENTORY key. This causes an INVENTORY MANAGEMENT screen to be displayed.

**NOTE**

- When INVENTORY key is pressed, SHELL, PROP and FUZE must be updated.
- The message "INVENTORY UPDATE REQUIRED" only appears if the screen is entered after a fire mission and the operator has not verified the ammo from the previous fire mission, or if a direct or manual mission was performed.

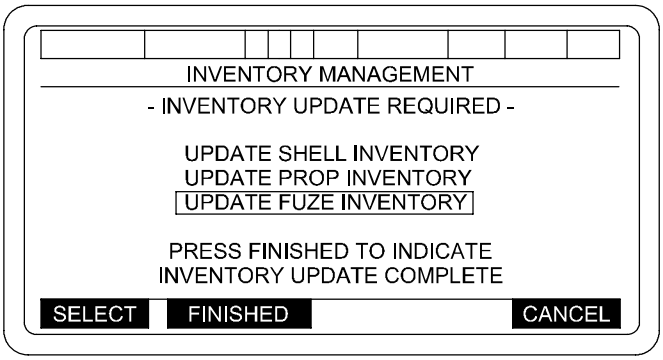


06pc172ma

c. This will allow the operator to manually input the type of round actually fired and correct the ammo inventory.

d. If FINISHED is pressed at this point, the operator will be returned to a ROUND COMPLETE screen and none of the ammo from that fire mission will be subtracted from the inventory.

# O-8 PDFCS FIRE MISSION - CONTINUED

## O-8.4 End of Mission.

Notification that a Fire Mission has ended is sent by an END OF MISSION (EOM) message from the POC. Normally, this is done when all rounds requested in a Fire Mission have been fired. When all the rounds for a mission have been fired, a ROUNDS COMPLETE OR MISSION PAUSED, AWAITING EOM OR CONTINUATION OF MISSION screen will be displayed until an EOM message is sent from the POC. When the EOM message is received by the PDFCS, an END OF MISSION screen is displayed.

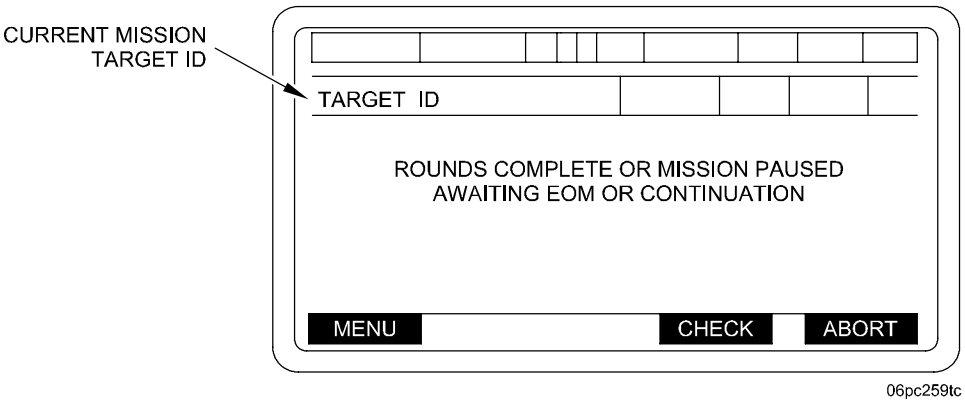


**CAUTION**

Operate Personnel Fan (Exhaust) switch on the Accessory Control Box with the Vent Duct Control Handle in DOWN position for 2 minutes when crew members observe fumes, smoke or indication of carbon monoxide build up in the crew compartment.

**NOTE**

- While awaiting EOM or continuation of a mission, you can access the SETUP AND INFORMATION menus by pressing the MENU key (e.g. to update inventory to add new ammo received). The PDFCS will automatically interrupt whatever you are doing if the fire mission is continued.
- See Table O-4 in Section O-4 (PDFCS Operating Controls and Indicators) for instructions and warnings which could appear on the SECTION IN ORDER display.

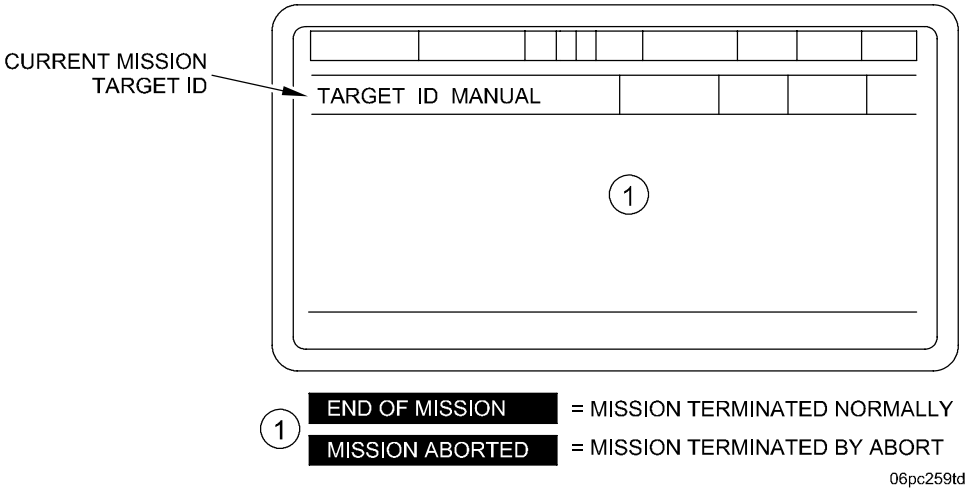

# O-8 PDFCS FIRE MISSION - CONTINUED

## O-8.5 PDFCS Emergency Mission.

Because the M109A6 makes frequent tactical and survivability moves, receiving a Fire Mission while moving will become a routine event. During a move, a Fire Mission order may be sent requiring the individual howitzer to stop, emplace, and fire on a target at any time. When this type of order is sent, an audible alert and a visible alert in the form “FIREMSN RECEIVED” “ACK” in field 16 is displayed to the operator.

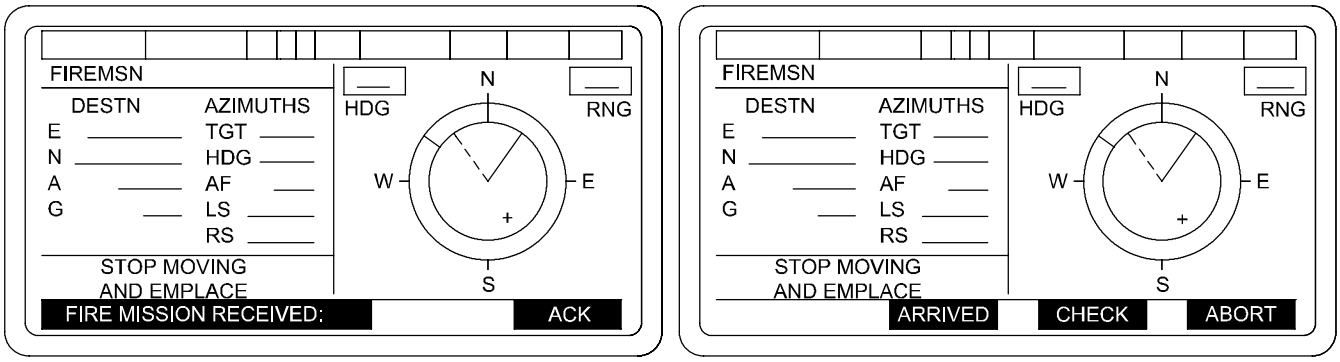


06pc274ta

O-8.5.1 Emplace.

The chief of section must ACK the mission and select a suitable firing position as quickly as possible. Depress ARRIVED softkey to receive the Fire Mission. Fire Mission data will be computed and displayed.

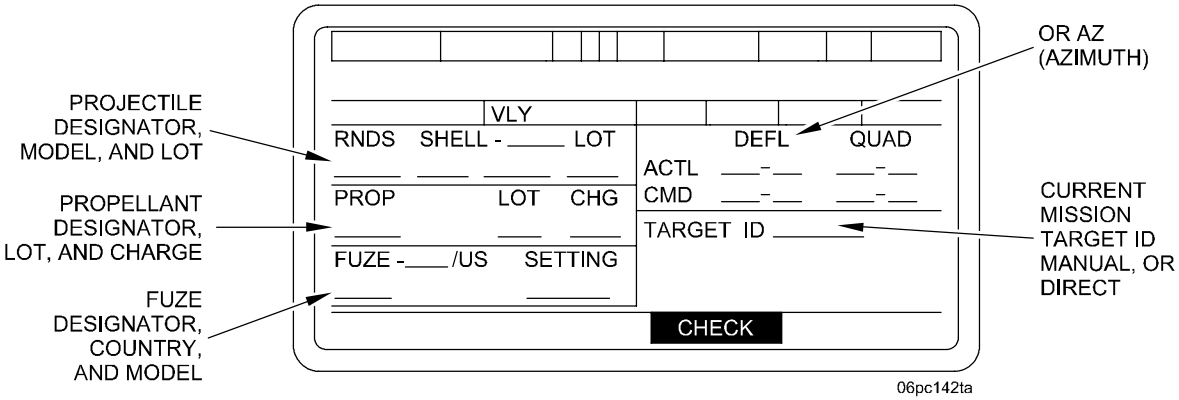


06pc142ta

# O-8 PDFCS FIRE MISSION - CONTINUED

## O-8.5 PDFCS Emergency Mission - Continued

O-8.5.2 Ready Gun.

a. Set HYDRAULIC POWER switch on hydraulic control box and GUN SERVO switch on PDU to ON.

b. Release gun tube from travel lock.

c. Release cab traverse lock.

O-8.5.3 LAY, LOAD, LAY, AND FIRE.

**NOTE**

Ballistic computations must have been completed before LAY key is depressed.

a. Depress and hold LAY key to bring gun to target Azimuth and LAY elevation. Look through tube and verify immediate Crest is clear.

b. Depress LOAD key to LAY weapon on COMMANDED deflection and LOAD quadrant.

c. Depress LAY key to LAY weapon on COMMANDED deflection and quadrant. Ensure LAY key is held until LAY indicator is highlighted.

d. On command, fire the gun.

O-8.5.4 End of Mission.

a. When END OF MISSION message is received, wait for instructions to proceed with displacement.

b. After the END OF MISSION message, the MOVE ORDER screen with previous move mission data will be displayed.

c. Turn on Personnel Fan (Exhaust) switch on the Accessory Control Box and move the Vent Duct Control Handle into DOWN position. Operate Personnel Fan for 1-2 minutes until all fumes are exhausted.

d. Proceed to ordered destination.

**CAUTION**

Operate Personnel Fan (Exhaust) switch on the Accessory Control Box with the Vent Duct Control Handle in DOWN position for 2 minutes when crew members observe fumes, smoke or indication of carbon monoxide build up in the crew compartment.

# O-8 PDFCS FIRE MISSION - CONTINUED

## O-8.6 Direct Fire Procedures Using PDFCS.

**NOTE**

While the PDFCS can be used, manual (one man-one sight) procedures have been found to be faster and just as accurate.

For direct fire against close range targets, PDFCS can be used to aid in laying the cannon. COS identifies target, states type charge, projectile and fuze to be used, estimates speed (if target is moving) and announces lead to GUNNER. COS continues direct firing procedures until target is destroyed.

a. COS first identifies direct fire target. If target consists of several weapons, he selects target that is the greatest threat to his position.

b. COS gives fire command in the following order:

| ELEMENT | EXAMPLE |
|---|---|
| Target designation | Target, lead tank |
| Target direction | Left/right front |
| Projectile, charge, fuze | Shell HE, charge 7, fuze quick |
| Lead | Lead left/right 10 |
| Method of fire | Fire at will |

**NOTE**

- "Fire at will" means to keep firing until target is destroyed or another command is given.
- COS will estimate range if he has no accurate range.
- COS will use lead chart mounted in commander's cupola (shown below) for initial lead.

**DIRECT FIRE MOVING TARGET LEAD**

| TARGET SPEED (MPH) | TARGET DIRECTION OF TRAVEL LEAD IN MILS (m) | | |
|---|---|---|---|
| | ↔ | ⤫ | ↕ |
| 5 | 5m | 5m | 0m |
| 10 | 10m | 5m | 0m |
| 15 | 15m | 10m | 0m |
| 20 | 20m | 15m | 0m |
| 25 | 20m | 15m | 0m |
| 30 | 30m | 20m | 0m |

c. On Display Unit COS sets GUN SERVO switch to OFF.

# O-8 PDFCS FIRE MISSION - CONTINUED

## O-8.6 Direct Fire Procedures Using PDFCS - Continued

d. On hydraulic control box (1), turn HYDRAULIC POWER switch (2) to ON, TRAVERSE MODE switch (3) to POWER, TRAVERSE CONTROL switch (4) to GUNNER, and ELEVATE CONTROL switch (5) to COS.

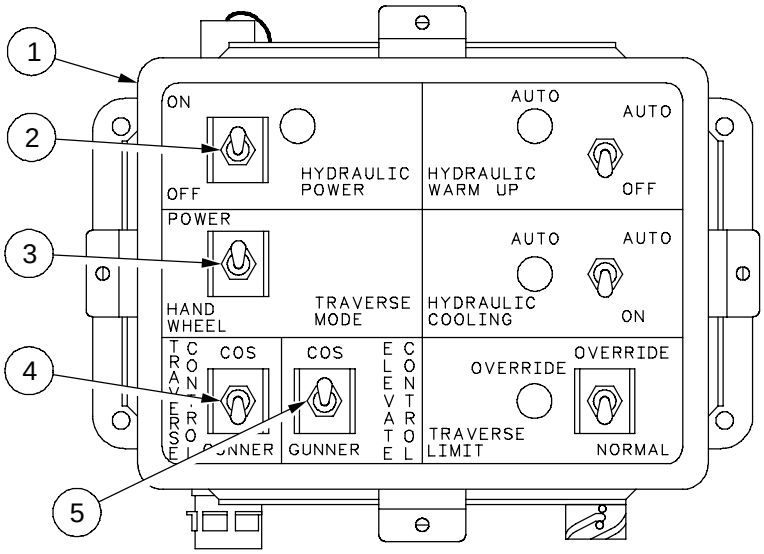


hipc173a

e. Bring up SETUP AND INFORMATION menu on Display Unit.

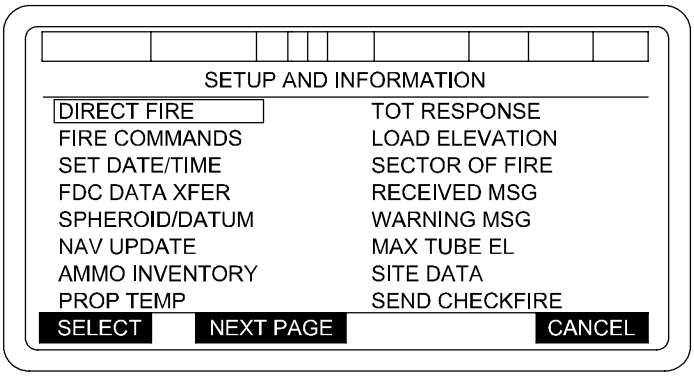


06pc260tb

**NOTE**

The NAV update selection shall be available to the PDFCS operator at all times except when a fire mission is active or the navigation subsystem is unavailable.

# O-8 PDFCS FIRE MISSION - CONTINUED

## O-8.6 Direct Fire Procedures Using PDFCS - Continued

f. With cursor (box) at DIRECT FIRE, press softkey located directly beneath SELECT prompt to display a DIRECT FIRE MODE ENTRY menu on PDU.

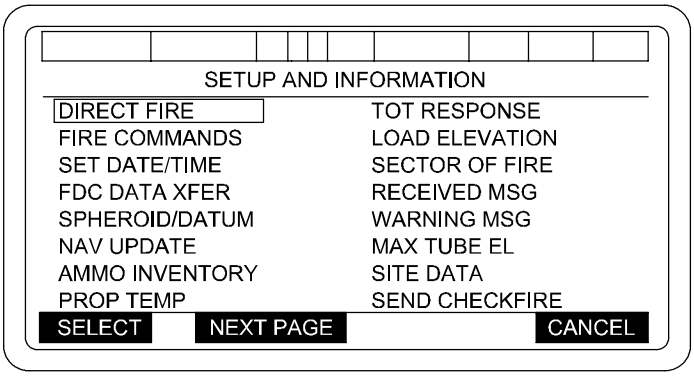


06pc260tb

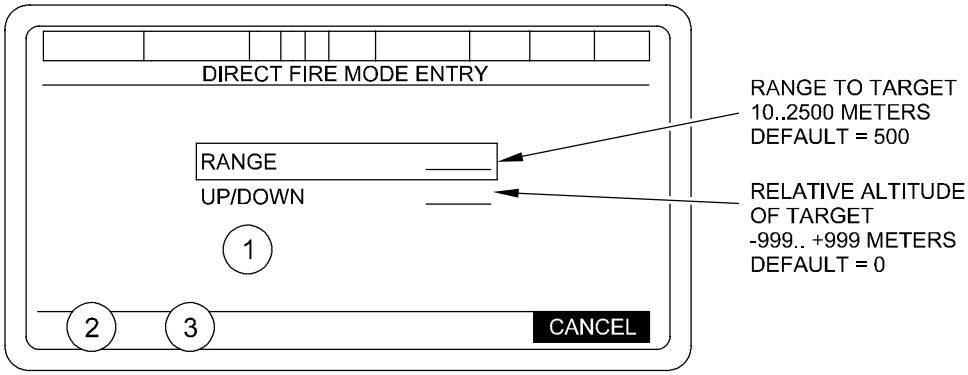


06pc183ma

(1) blank - No selection made
"TYPE VALUE 10 TO 2500 METERS" - RANGE Selected.
"-PRESS ENT KEY-"
"TYPE VALUE -999 TO +999" - UP/DOWN Selected.
"-PRESS ENT KEY-"

(2) blank - If RANGE or UP/DOWN Selected

SELECT -Awaiting Selection or USE ALL. Selects current menu item.

(3) blank - If RANGE Selected

+/- - UP/DOWN Selected. Change sign of value

USE ALL - Awaiting Selection or USE ALL. Initiate direct fire mission.

# O-8 PDFCS FIRE MISSION - CONTINUED

## O-8.6 Direct Fire Procedures Using PDFCS - Continued

g. Press softkey located directly beneath the USE ALL prompt of the DIRECT FIRE MODE ENTRY menu to display a FIRE MISSION menu.

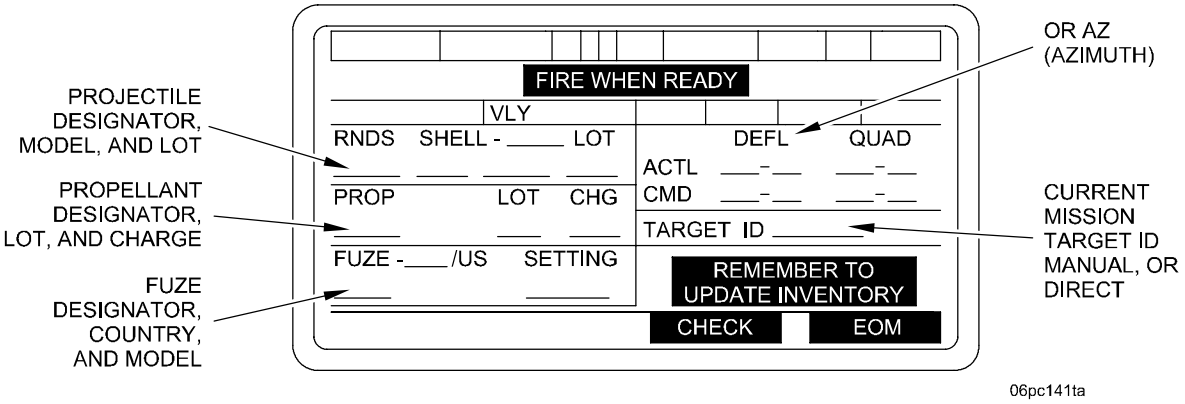


**NOTE**

You will only use the ACTL QUAD field of this screen to set tube elevation.

h. Using the DIRECT FIRE RANGE PLATE, the COS determines elevation based on estimated range. Using COS control handle, COS elevates/depresses gun to proper elevation in the ACTL QUAD field of the FIRE MISSION menu, then announces "SET" continually until howitzer is fired.

**DIRECT FIRE RANGE PLATE**
**155MM HOWITZER**

| M549A1 RAP | | M107 HE PROJECTILE | |
|---|---|---|---|
| ROCKET OFF | | M19A1 PC WB | |
| M203 SERIES PC RB | | M119A2 PC RB | |
| RANGE METERS | ELEV MILS | RANGE METERS | ELEV MILS |
| 400 | 3 | 400 | 4 |
| 600 | 5 | 600 | 7 |
| 800 | 6 | 800 | 9 |
| 1000 | 8 | 1000 | 11 |
| 1200 | 9 | 1200 | 14 |
| 1400 | 11 | 1400 | 16 |
| L15 HE PROJECTILE | | M107 HE PROJECTILE | |
| M203 SERIES PC RB | | M4A2 PC WB | |
| RANGE METERS | ELEV MILS | RANGE METERS | ELEV MILS |
| 400 | | 400 | 6 |
| 600 | | 600 | 10 |
| 800 | | 800 | 13 |
| 1000 | | 1000 | 16 |
| 1200 | | 1200 | 20 |
| 1400 | | 1400 | 23 |
| PLATE DIRECT FIRE | | P/N 12910859 | |

# O-8 PDFCS FIRE MISSION - CONTINUED

## O-8.6 Direct Fire Procedures Using PDFCS - Continued

i. On subsequent rounds, the COS will estimate a new range based on observed effects and repeat step h until target is destroyed or other commands become necessary.

j. GUNNER sets azimuth counter (6) to 3200, and turns direct/indirect fire bar knob (7) to DIRECT position to engage 5.0 mils per click sight mechanism.

**NOTE**

The head of the PANTEL must remain oriented with the gun tube. The PANTEL will be oriented with the gun tube if the azimuth counter reads 3200 and the PANTEL is properly boresighted.

k. If central laying is used, GUNNER applies announced lead to azimuth counter (6). If lead is left, add the lead angle to 3200; if lead is right, subtract the lead angle from 3200. The GUNNER then sights through the eyepiece (8) and traverses tube until vertical hairline (9) of PANTEL centers on the target. If reticle method is used, GUNNER places vertical hairline (10) left or right of target the number of mils lead announced by COS.

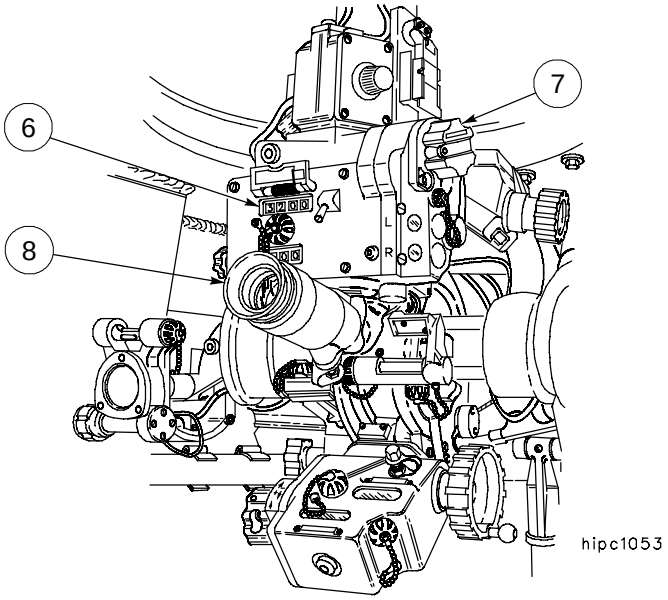


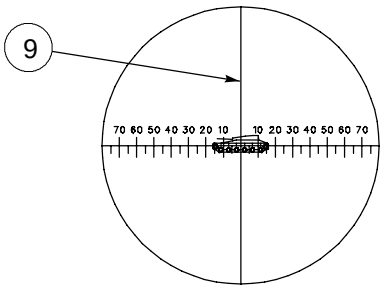


CENTRAL LAYING

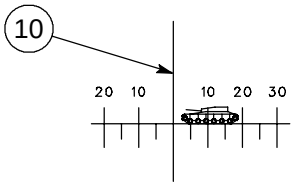


RETICLE METHOD

hipc1057

# O-8 PDFCS FIRE MISSION - CONTINUED

## O-8.6 Direct Fire Procedures Using PDFCS - Continued

l. When GUNNER establishes correct sight picture, and COS has announced “SET”, GUNNER commands “FIRE”.

m. CANNONEER fires gun.

n. After firing, GUNNER continues to lay on target until it is destroyed or a subsequent fire command is issued.

o. COS gives subsequent fire commands based on observed effects and changes lead as necessary.

| ELEMENT | EXAMPLE |
|---|---|
| Change in Lead | Right/left 5 |

p. GUNNER turns azimuth deflection knob in 5-mil (1-click) increments to set lead change.

## O-8.7 System Menus.

The SETUP AND INFORMATION menu is used to access the various screens to initialize the PDFCS and align the Navigation System. It also provides access to menus allowing the operator to enter fire commands and muzzle velocities, access messages, and to monitor PDFCS STATUS and tube temperature. The operator can change the display format and intensity, input Manual Move Orders, perform a system update, and access stored targets. The operator can enter a SPHEROID/DATUM; can access the MAINTENANCE MODE MENU; and can update his ammunition inventory. This will complete the capabilities of the system menus.

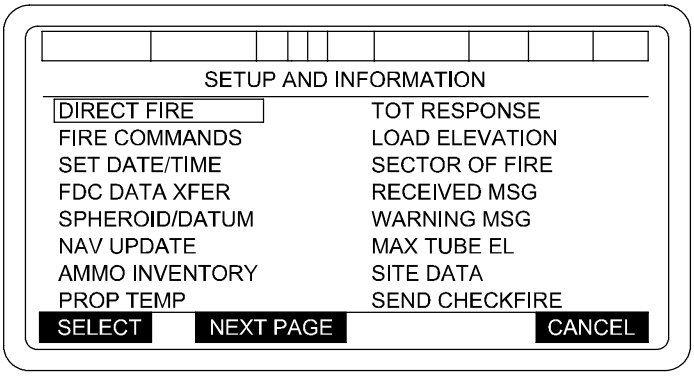


06pc260tb

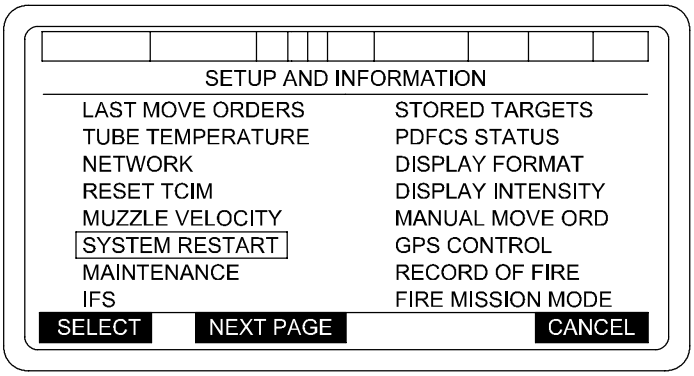


06pc261tf

# O-8 PDFCS FIRE MISSION - CONTINUED

## O-8.7 System Menus - Continued

O-8.7.1 Fire Commands. Selection of FIRE COMMANDS from the SETUP AND INFORMATION menu will result in display of the FIRE COMMANDS screen. Two options will be shown, FDC FIRE COMMANDS and PALADIN FIRE COMMANDS.

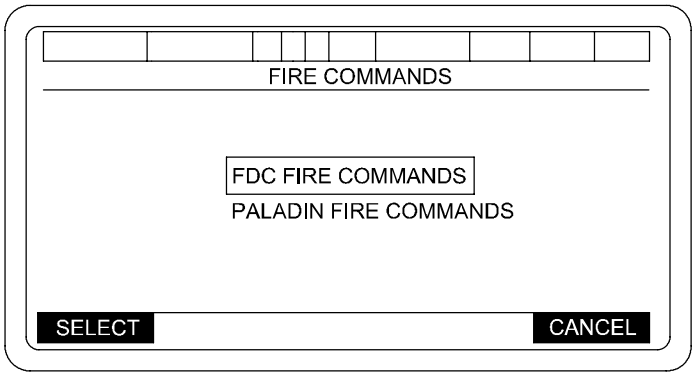


06pc204tc

O-8.7.1.1 FDC FIRE COMMANDS ENTRY screen.

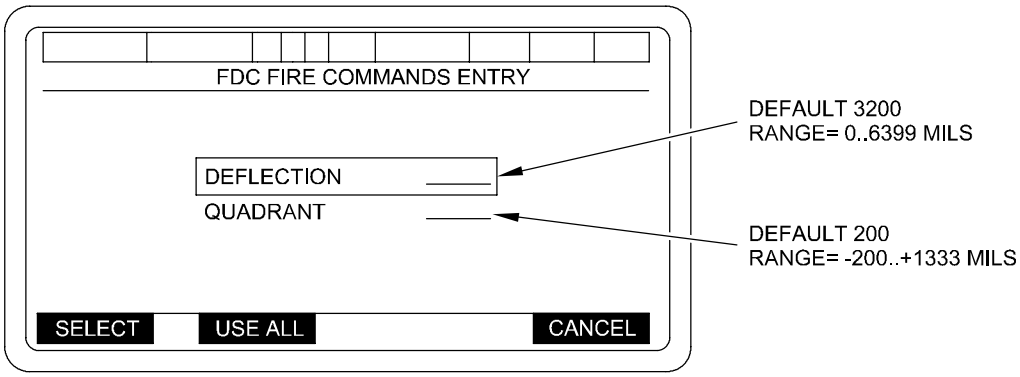


06pc204tb

a. With the FIRE COMMANDS ENTRY screen displayed, box in DEFLECTION; press SELECT key; type in deflection; and press ENT key.

b. Box in QUADRANT and press SELECT key. Type in quadrant and press ENT key.

c. When correct fire command has been entered, press USE ALL key to display a FIRE MISSION screen with firing data in the COMMANDED (CMD) field.

# O-8 PDFCS FIRE MISSION - CONTINUED

## O-8.7 System Menus - Continued

O-8.7.1 Fire Commands - Continued

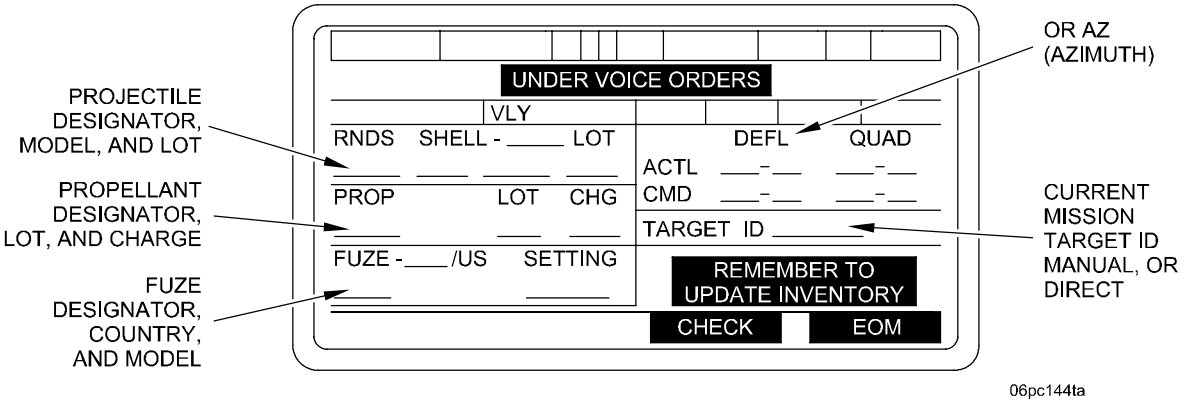


d. The fire mission is fired using normal procedures.

e. When the voice order to end the mission is received, press the EOM key.

f. Ammo accountability is then manually processed (para O-8.3).

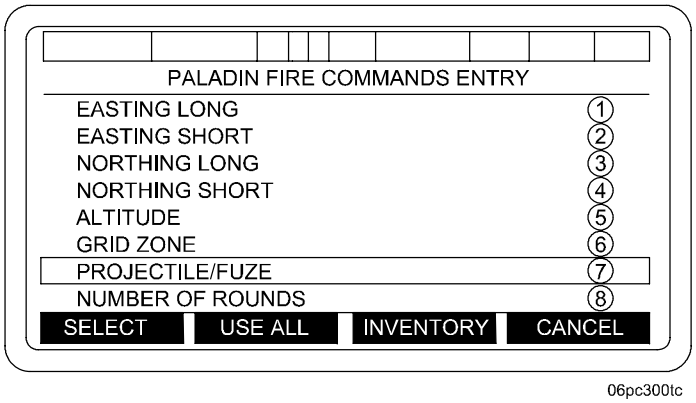


O-8.7.1.2 PALADIN FIRE COMMANDS ENTRY display. If selected, the Paladin will check the current ammunition inventory. If at least one Projectile/Fuze combination is present, the Paladin will display the PALADIN FIRE COMMANDS ENTRY screen.

**NOTE**

If no Projectile/Fuze combinations are found, Paladin will display “NO AMMO PRESENT” “ACK”. Pressing ACK will return display to the SETUP AND INFORMATION menu. Refer to Table O-13.

# O-8 PDFCS FIRE MISSION - CONTINUED

## O-8.7 System Menus - Continued

O-8.7.1 Fire Commands - Continued

**Table O-13. Paladin Fire Commands Entry Display**

| Field | Description | Conditions for display |
|---|---|---|
| 1 | EASTING LONG<br>Range/Values:<br>(1) 0-9<br>Default/Initial value: Paladin's entered location<br>Units: Meters | (1) Defaults to the Paladin's current location.<br>(2) Shall be editable. |
| 2 | EASTING SHORT<br>Range/Values:<br>(1) 0-99999<br>(2) - - - - -<br>Default/Initial value: -----<br>Units: Meters | Note: Easting short fields shall be left justified. If the operator enters at least 1 digit and presses enter, the Paladin shall default remaining digits to the right with zeros.<br>(1) Operator entered.<br>(2) - - - - - |
| 3 | NORTHING LONG<br>Range/Values:<br>(1) 001-100<br>Default/Initial value: Paladin's entered location<br>Units: Meters | (1) Defaults to the Paladin's current location.<br>(2) Shall be editable. |
| 4 | NORTHING SHORT<br>Range/Values:<br>(1) 0-99999<br>(2) - - - - -<br>Default/Initial value: Blank<br>Units: Meters | Note: Northing short fields shall be left justified. If the operator enters at least 1 digit and presses enter, the Paladin shall default remaining digits to the right with zeros.<br>(1) Operator entered.<br>(2) - - - - - |

# O-8 PDFCS FIRE MISSION - CONTINUED

## O-8.7 System Menus - Continued

O-8.7.1 Fire Commands - Continued

**Table O-13. Paladin Fire Commands Entry Display - Continued**

| Field | Description | Conditions for display |
|---|---|---|
| 5 | ALTITUDE<br>Range/Values:<br>(1) -400 to +9999<br>(2) - - - - -<br>Default/Initial value: Blank<br>Units: Meters | (1) Operator entered.<br>(2) - - - - - |
| 6 | GRID ZONE<br>Range/Values:<br>(1) +/- 1-60<br>Default/Initial value: Paladin's entered grid zone | (1) Defaults to the Paladin's current location.<br>(2) Shall be editable. |
| 7 | PROJECTILE/ FUZE<br>Range/Values:<br>(1) HE / Q<br>(2) HE / TI<br>(3) HE / VT<br>(4) HE / D<br>(5) HE / CP<br>(6) HE / CPD<br>(7) ICM /TI<br>(8) WP / Q<br>(9) WP / TI<br>(10) SMK / TI<br>(11) ILL / TI<br>(12) - - - - -<br>Default/Initial value: ------ | Note: The PROJECTILE / FUZE shall not be available until the target location (EASTING LONG, EASTING SHORT, NORTHING LONG and NORTHING SHORT) is entered and is calculated to be within 50,000 meters.<br>(1) Operator selected.<br>(2) Operator selected.<br>(3) Operator selected.<br>(4) Operator selected.<br>(5) Operator selected.<br>(6) Operator selected.<br>(7) Operator selected.<br>(8) Operator selected.<br>(9) Operator selected.<br>(10) Operator selected.<br>(11) Operator selected.<br>(12) Operator has not selected a PROJECTILE / FUZE. |

# O-8 PDFCS FIRE MISSION - CONTINUED

## O-8.7 System Menus - Continued

O-8.7.1 Fire Commands - Continued

**Table O-13. Paladin Fire Commands Entry Display - Continued**

| Field | Description | Conditions for display |
|---|---|---|
| 8 | NUMBER OF ROUNDS<br>Range/Values:<br>(1) 1-99<br>(2) - -<br>Default/Initial value: ------ | Note: The NUMBER OF ROUNDS fields shall not be available until the target location (EASTING LONG, EASTING SHORT, NORTHING LONG and NORTHING SHORT) is entered and is calculated to be within 50,000 meters.<br>(1) Operator entered.<br>(2) Operator has not entered NUMBER OF ROUNDS. |

# O-8 PDFCS FIRE MISSION - CONTINUED

## O-8.7 System Menus - Continued

O-8.7.1 Fire Commands - Continued

a. After target location (fields 1-6) has been entered, Paladin will calculate the range to target. If the calculated range to target exceeds 50,000 meters, Paladin will display “RANGE TOO FAR” “ACK”.

b. Pressing ACK will allow operator to re-enter values into fields 1-6 of the PALADIN FIRE COMMANDS ENTRY display. Once the Paladin calculates the range to be within 50,000 meters, fields 7-8 will be available.

c. Selection of field 7 (Projectile/Fuze) will display the PALADIN FIRE COMMANDS ENTRY - PROJECTILE/FUZE SELECTIONS screen.

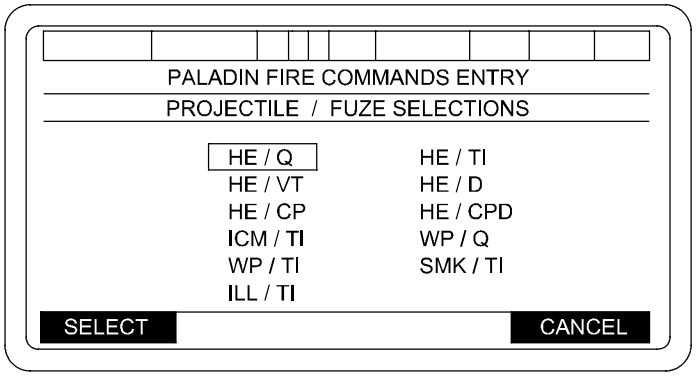


06pc300tg

d. The PALADIN FIRE COMMANDS ENTRY - PROJECTILE/FUZE SELECTIONS display will be populated with Projectile/Fuze combinations values that are available. Selection of a Projectile/Fuze will transition display back to PALADIN FIRE COMMANDS ENTRY screen.

**NOTE**

A target number block will be assigned by the Paladin. These target numbers will from PF9974 to PF9999. The target numbers will recycle when PF9999 is reached or there is a system restart.

Softkey sequencing shall be as follows:

- USE ALL - Paladin will transition to FIRE MISSION display. If dashed (----) fields remain in the display, the following message will display “INCOMPLETE ENTRY” “ACK”. Pressing ACK will end the mission and allow the operator to edit the mission data.

  If an error is detected (an error is a condition that causes to fire mission to be rejected), the Paladin shall abort the mission and return to the PALADIN FIRE COMMANDS ENTRY screen after 5 seconds. Upon return to the PALADIN FIRE COMMANDS ENTRY screen, the Paladin will display an appropriate operator message to indicate what caused the fire mission to abort.

- INVENTORY - Transitions to the AMMO INVENTORY display.

- + / – - Changes sign for current value.

- CANCEL - Transitions to SETUP AND INFORMATION menu.

# O-8 PDFCS FIRE MISSION - CONTINUED

## O-8.7 System Menus - Continued

O-8.7.2 Messages. The two types of PDFCS messages accessed from the SETUP AND INFORMATION menu are RECEIVED MSG and WARNING MSG. The received messages are ones received from the POC and the warning messages are generated by the PDFCS for system status. When there is a new message to read, a RCVD MSG (R) highlighted field 5 or WARN MSG (W) highlighted field 4 indicator will be displayed at the top of the screen. Access messages using the following procedures:

a. Box in desired message on SETUP AND INFORMATION menu and press SELECT key to display a RECEIVED MESSAGE/SYSTEM WARNING MESSAGE.

b. If more than one message is in the message queue, display next message by pressing the NEXT MSG key. If a message contains more than one page, display next page by pressing NEXT PAGE key.

c. To return to the SETUP AND INFORMATION menu, press CANCEL key.

**NOTE**

- The PDFCS shall keep eight (8) messages in a buffer. If there are more than eight unviewed messages, the PDFCS shall discard the oldest and display the error message “MESSAGES HAVE BEEN LOST” “ACK” to the operator upon entry into the screen.
- The RECEIVED MESSAGE counter has a range from 0001 to 9999 and will reset on each power-up.

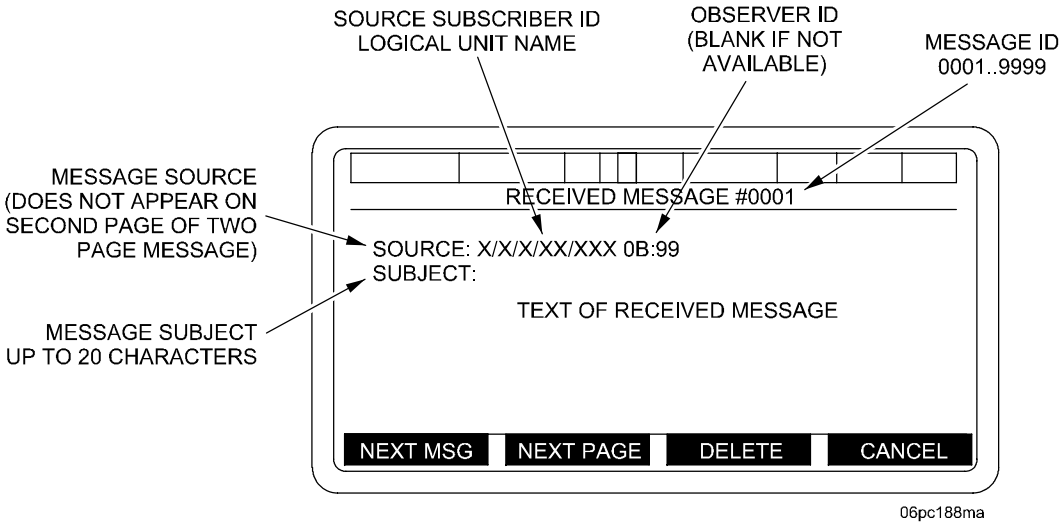


NEXT MSG = DISPLAY NEXT MESSAGE (WHEN ON THE LAST MESSAGE AND NEXT MSG IS PRESSED, THE DISPLAY SCROLLS TO THE FIRST MESSAGE IN THE BUFFER)

NEXT PAGE = DISPLAY NEXT PAGE (BLANKED IF NO NEXT PAGE)

DELETE = DELETE CURRENT MESSAGE (IF THERE ARE NO MORE MESSAGES, THEN “NO MORE MESSAGES” SHALL BE DISPLAYED

# O-8 PDFCS FIRE MISSION - CONTINUED

## O-8.7 System Menus - Continued

O-8.7.2 Messages - Continued

**NOTE**

The SYSTEM WARNING MESSAGE counter has a range from 0001 to 9999 and will reset on each power-up. If the counter reaches 9999, then the next WARNING MESSAGE number will be reset to 0001.

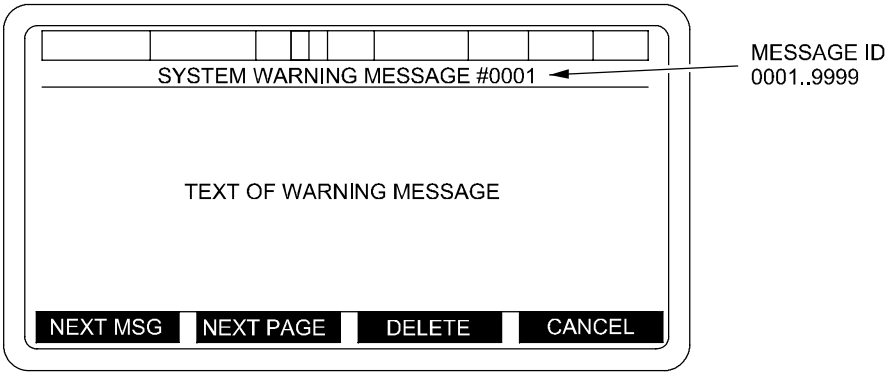


06pc189ma

NEXT MSG = DISPLAY NEXT MESSAGE (WHEN ON THE LAST MESSAGE AND NEXT MSG IS PRESSED, THE DISPLAY SCROLLS TO THE FIRST MESSAGE IN THE BUFFER)

NEXT PAGE = DISPLAY NEXT PAGE (BLANKED IF NO NEXT PAGE)

DELETE = DELETE CURRENT MESSAGE (IF THERE ARE NO MORE MESSAGES THEN "NO MORE MESSAGES" IS DISPLAYED)

O-8.7.3 Maximum Tube Elevation. From the SET UP AND INFORMATION menu select "MAX TUBE EL" to input the maximum tube elevation.

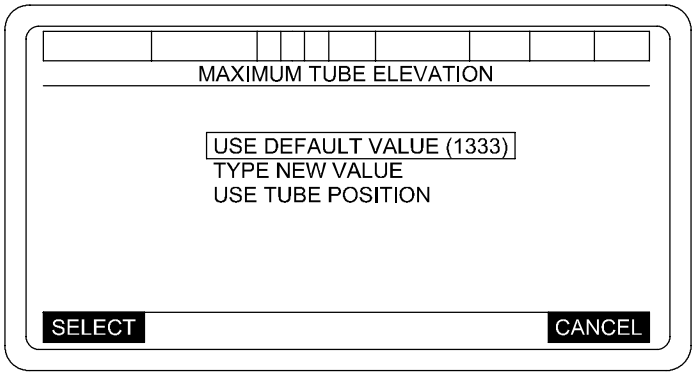


06pc154ma

a. Entering MAXIMUM TUBE ELEVATION. If a maximum tube elevation is not entered, the default value as shown on the display will be entered automatically. If an elevation other than the default value is desired, the entry can be made by either of two methods:

# O-8 PDFCS FIRE MISSION - CONTINUED

## O-8.7 System Menus - Continued

O-8.7.3 Maximum Tube Elevation - Continued

### NOTE

- Numerical value must be entered before sign. Default sign is (+).
- The PDFCS will default to maximum tube elevation of 1333 mils unless a value or USE TUBE POSITION was selected since last power up or restart.

(1) Box in TYPE NEW VALUE and depress SELECT to bring up a new MAXIMUM TUBE ELEVATION display. Enter required value for MAX TUBE EL and press ENT key.

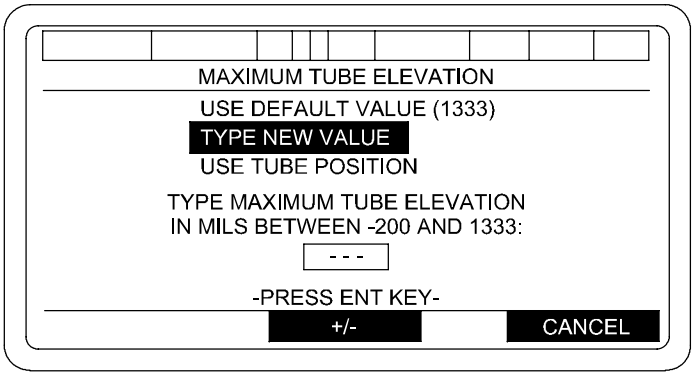


06pc655m

(2) Box in USE TUBE POSITION and press SELECT key to bring up a new MAXIMUM TUBE ELEVATION display. Using the COS or gunner's control handle, move tube to desired elevation and press ENT key.

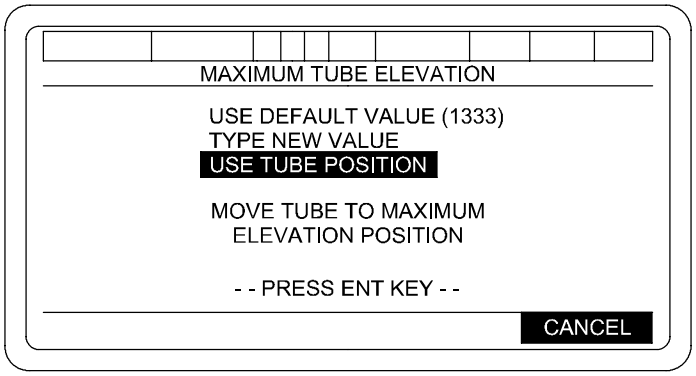


06pc156ma

# O-8 PDFCS FIRE MISSION - CONTINUED

## O-8.7 System Menus - Continued

O-8.7.4 Send Checkfire. Selecting SEND CHECKFIRE will result in questions asked, “ARE YOU SURE”, “YES” “NO”. YES selection will cause all howitzer systems to be placed on CHECKFIRE. Only the POC/FDC can cancel the CHECKFIRE. NO selection = No action.

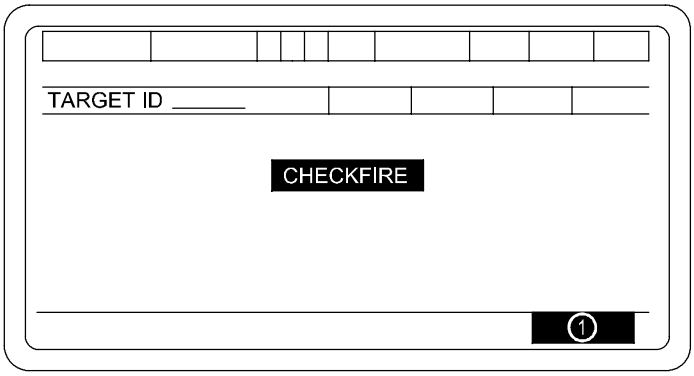


06pc145tb

1 EOM - MISSION is direct or manual

ABORT - MISSION is not direct or manual

O-8.7.5 Stored Targets. The PDFCS can store up to ten targets. These targets can be reviewed for information concerning target number, rounds to be fired, shell, propellant, fuze, and method of control. To access the target summary, perform the following steps:

a. Box in STORED TARGETS on SETUP AND INFORMATION menu and press SELECT key to display a STORED TARGET SUMMARY screen.

b. If there is more than one page, press NEXT PAGE key to display next page.

c. To return to SETUP AND INFORMATION menu, press CANCEL key.

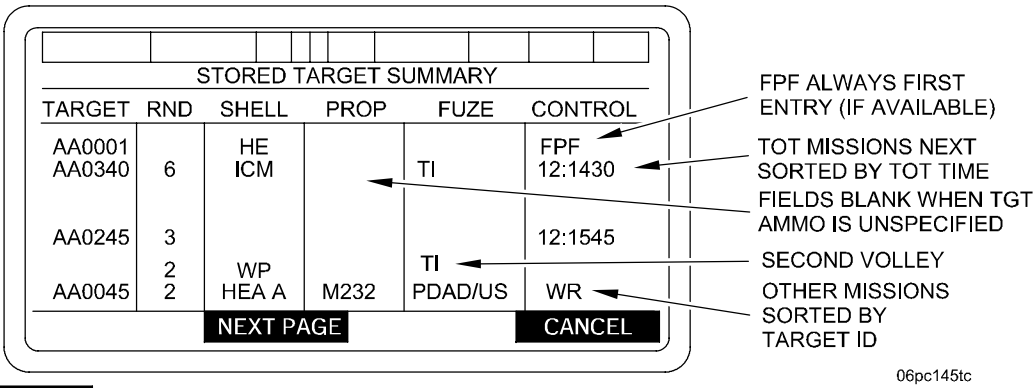


06pc145tc

NEXT PAGE = Shows next page. If last page, then shows first page. (Blanked if only one page or no targets).

d. Paladin will store the shell and/or fuze model as received and display that data based on its associated generic type. SHELL values are HE, ICM, WP, SMK, ILL, CPH and SAD. FUZE values are PD, TI, VT, D, CP or CPD. If shell is specified XM982 or M982 the Paladin will display PGM. Shell model numbers are shown in Table O-14. Fuze model numbers are shown in Table O-15.

# O-8 PDFCS FIRE MISSION - CONTINUED

## O-8.7 System Menus - Continued

O-8.7.5 Stored Targets - Continued

**Table O-14. Shell Model Numbers**

| HE SHELLS | ICM SHELLS | WP SHELLS | SMK SHELLS | ILL SHELLS | CPH SHELL | SAD SHELL |
|---|---|---|---|---|---|---|
| M795 | M483A1 | M110 | M116A1/HC | M485A1 | M712 | M898 |
| M107DC | M864 | M110A1 | M116C1 | M485A2 | | DM702 |
| M107DCBG | M864A1 | M110A2 | M116C2 | NR109 | | DM702A1 |
| M107DCB2 | M449A1 | M110E2 | DM45A1 | | | O155ACF1 |
| M107DCC1 | M718 | M110C1 | | | | 155BONUS |
| NM28DC | M718A1 | M825 | | | | |
| OE56DC | M741 | M825A1 | | | | |
| OE69DC | M741A1 | | | | | |
| DM21DC | M692 | | | | | |
| M107NC | M731 | | | | | |
| M107NCBG | | | | | | |
| M107NCB2 | | | | | | |
| M107NCC1 | | | | | | |
| NM28NC | | | | | | |
| OE56NC | | | | | | |
| OE69NC | | | | | | |
| DM21NC | | | | | | |
| M549 | | | | | | |
| M549A1 | | | | | | |

**Table O-15. Fuze Model Numbers**

| PD FUZES | TI FUZE | VT FUZE | D FUZE | CP/CPD FUZE |
|---|---|---|---|---|
| M51A4 | M767 | M732A2 | M51A4 | M78 |
| M51A5 | M767A1 | M732 | M51A5 | M78A1 |
| M557 | M762 | M728 | M557 | DM371 |
| PDM557 | M762A1 | M782 | PDM557 | MK399 |
| M557C1 | M564 | M514 | M557C1 | |
| M572 | M577 | | M739 | |
| M739 | M577A1 | | M739A1 | |
| M739A1 | M565 | | M782 | |
| M782 | M582 | | DM211 | |
| DM211 | M582A1 | | DM241 | |
| DM241 | M782 | | M572 | |
| L32A2 | M548 | | L85A2 | |
| L32A3 | | | L106A2 | |
| L32A4 | | | L106A3 | |
| L85A2 | | | L112A1 | |
| L106A1 | | | | |
| L106A2 | | | | |
| L106A3 | | | | |
| L112A1 | | | | |

# O-8 PDFCS FIRE MISSION - CONTINUED

## O-8.7 System Menus - Continued

O-8.7.5 Stored Targets - Continued

### NOTE

- If no targets are stored in the Stored Target buffer, then the PDFCS shall display “NO STORED TARGETS”.
- Shell and fuze entries will be blank if the stored mission arrives from the FDC with unspecified ammunition and is not an FPF mission (as shown above in target ID AA0245).
- Targets with RND (rounds) over 99 are displayed with **.

O-8.7.6 PDFCS Status. To display the PDFCS SUBSYSTEM STATUS, proceed as follows:

a. Box in PDFCS STATUS on SETUP AND INFORMATION menu and press SELECT to display the PDFCS STATUS screen.

b. Cursor and select an PDFCS subsystem to view the subsystems. With the exception of the IFS SUBSYSTEM, the status of each subsystem will be displayed either “OK” or “FAIL”.

c. IFS SUBSYSTEM status values are shown in Table O-17.

d. To return to the SETUP AND INFORMATION menu, press CANCEL key.

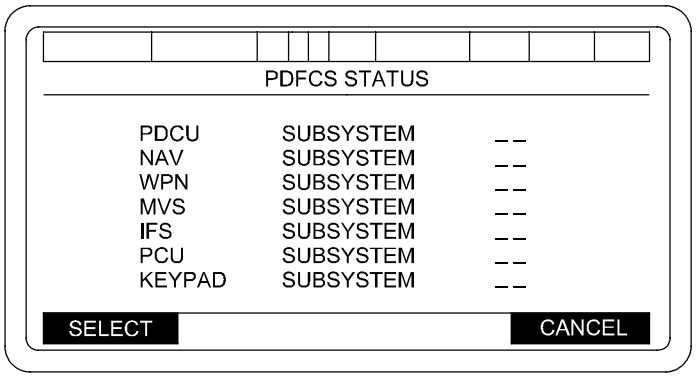


06pc638mb

# O-8 PDFCS FIRE MISSION - CONTINUED

## O-8.7 System Menus - Continued

O-8.7.6 PDFCS Status - Continued

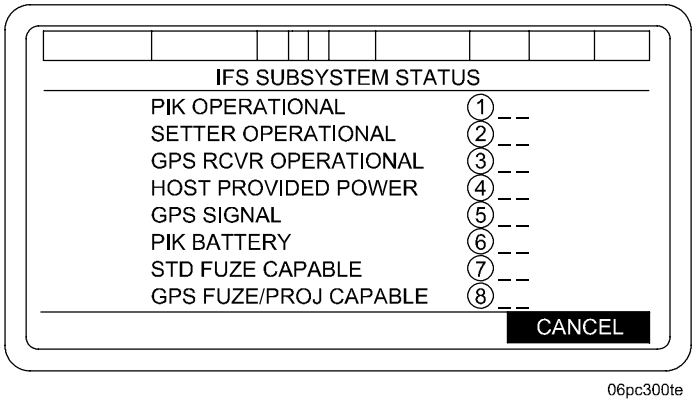


**Table O-16. IFS Subsystem Status Display**

| Field | Description | Conditions for display |
|---|---|---|
| 1 | PIK OPERATIONAL<br>Range/Values:<br>(1) - -<br>(2) DISC<br>(3) FAIL<br>(4) YES | <br><br>(1) Status not determined.<br>(2) PIK disconnected.<br>(3) Failed operational BIT.<br>(4) Passed operational BIT |
| 2 | SETTER OPERATIONAL<br>Range/Values:<br>(1) - -<br>(2) DISC<br>(3) FAIL<br>(4) YES | <br><br>(1) Status unknown due to PIK OPERATIONAL is not determined or is DISC or FAIL.<br>(2) Setter power, PIK-Setter cable, Setter or PIK disconnected.<br>(3) Failed operational BIT.<br>(4) Passed operational BIT. |
| 3 | GPS RCVR OPERATIONAL<br>Range/Values:<br>(1) - -<br>(2) DISC<br>(3) FAIL<br>(4) YES | <br><br>(1) Status unknown due to PIK OPERATIONAL is not determined or is DISC or FAIL.<br>(2) GPS RCVR (DAGR) is disconnected from the PIK.<br>(3) Failed operational BIT.<br>(4) Passed operational BIT. |

# O-8 PDFCS FIRE MISSION - CONTINUED

## O-8.7 System Menus - Continued

**Table O-16. IFS Subsystem Status Display - Continued**

| Field | Description | Conditions for display |
|---|---|---|
| 4 | HOST PROVIDED POWER<br>Range/Values:<br>(1) - -<br>(2) OK<br>(3) LOW | <br><br>(1) Status unknown due to PIK OPERATIONAL is not determined or is DISC or FAIL.<br>(2) Host power is sufficient to operate the PIK and set GPS fuze/projectile.<br>(3) Host power is sufficient to operate the PIK, but not sufficient to set a GPS fuze/projectile. |
| 5 | GPS SIGNAL<br>Range/Values:<br>(1) - -<br>(2) GOOD<br>(3) POOR<br>(4) DISC | <br><br>(1) Status unknown due to PIK OPERATIONAL is not determined, DISC or FAIL or the DAGR is DISC or FAIL.<br>(2) DAGR is operational and signal is good.<br>(3) DAGR is operational but, signal is degraded. (sky view shaded, jamming, damaged or poor connection of DAGR cable or antenna)<br>(4) Antenna cable, antenna is disconnected. |
| 6 | PIK BATTERY<br>Range/Values:<br>(1) - -<br>(2) GOOD<br>(3) BAD | <br><br>(1) Status unknown due to PIK OPERATIONAL is not determined or is DISC or FAIL.<br>(2) PIK Battery is good.<br>(3) PIK Battery is low. |
| 7 | STD FUZE CAPABLE<br>Range/Values:<br>(1) - -<br>(2) YES<br>(3) NO | <br><br>(1) Status unknown due to PIK OPERATIONAL is not determined or is DISC or FAIL.<br>(2) The PIK is capable of setting standard fuzes.<br>(3) The PIK is *NOT* capable of setting standard fuzes. |
| 8 | GPS FUZE/PROJ CAPABLE<br>Range/Values:<br>(1) - -<br>(2) YES<br>(3) NO | <br><br>(1) Status unknown due to PIK OPERATIONAL is not determined or is DISC or FAIL.<br>(2) The PIK is capable of setting GPS fuze/projectiles.<br>(3) The PIK is *NOT* capable of setting GPS fuze/projectiles. |

# O-8 PDFCS FIRE MISSION - CONTINUED

## O-8.7 System Menus - Continued

O-8.7.7 Last Move Orders. To display the last move orders received by the PDFCS, proceed as follows:

a. Box in LAST MOVE ORDERS on SETUP AND INFORMATION menu and press SELECT key. A STEERTO FIRE AREA screen will be displayed showing LAST MOVE ORDERS.

b. Press the EMPLACE key to display an EMPLACE FIRE AREA screen showing LAST MOVE ORDERS.

c. From STEERTO FIRE AREA or EMPLACE FIRE AREA screen, the SETUP AND INFORMATION menu can be reached by pressing the CANCEL key.

**NOTE**

This will not be available after the first Survivability Move.

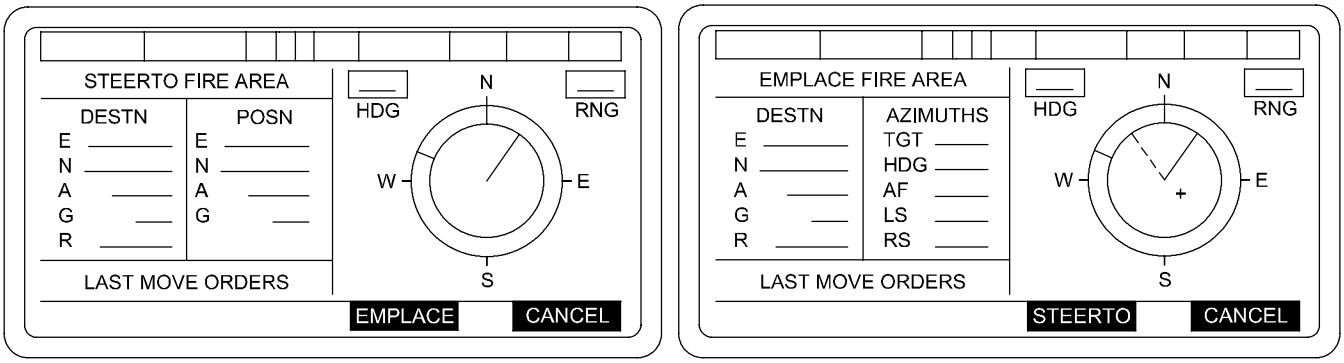


06pc192mb

O-8.7.8 Tube Temperature. The TUBE TEMPERATURE STATUS is shown on the FIRE MISSION screen as COLD, WARM, or HOT; and a time is displayed which indicates how long a complete round may remain in the tube. TUBE TEMPERATURE STATUS can also be displayed as follows:

a. Box in TUBE TEMPERATURE on SETUP AND INFORMATION menu and press SELECT key.

b. A TUBE TEMPERATURE screen will be displayed showing TEMPERATURE STATUS (COLD, WARM, HOT), and SAFE TIME IN TUBE.

c. To return to SETUP AND INFORMATION menu, press CANCEL key.

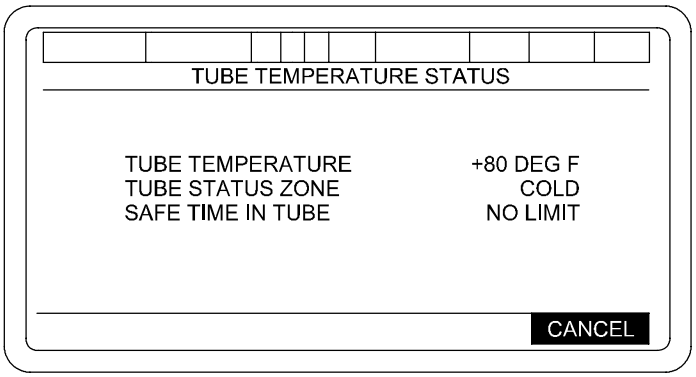


06pc193ma

# O-8 PDFCS FIRE MISSION - CONTINUED

## O-8.7 System Menus - Continued

O-8.7.9 System Restart. To do a SYSTEM RESTART without shutting the system off and powering back up, proceed as follows:

a. Box in SYSTEM RESTART on SETUP AND INFORMATION menu and press SELECT key. A prompt will be displayed, “ARE YOU SURE” “YES” “NO”.

b. The system will restart at a POWER UP STATUS.

c. INITIALIZATION must be performed.

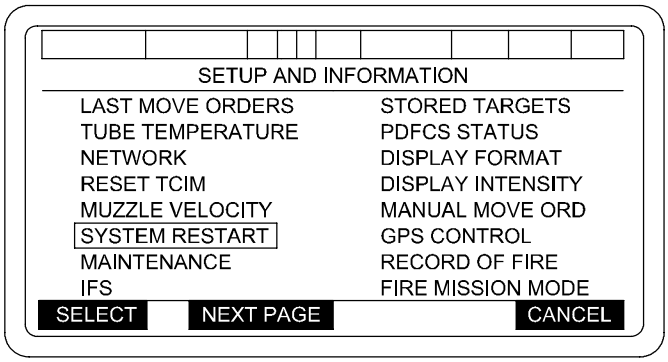


06pc261tf

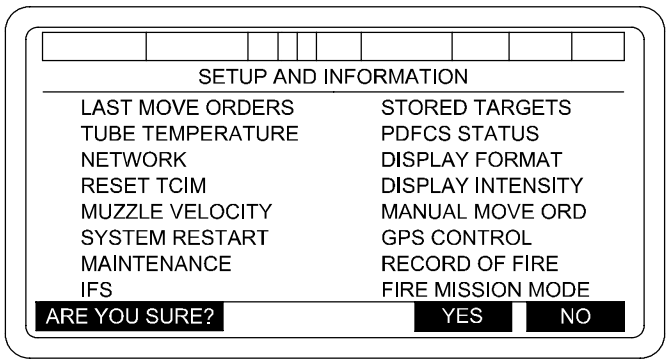


06pc261tg

# O-8 PDFCS FIRE MISSION - CONTINUED

## O-8.7 System Menus - Continued

O-8.7.10 Display Format. This function is used to change the display of the tube position from AZIMUTH to DEFLECTION, and vice versa; or the TEMPERATURE STATUS display from Fahrenheit to Celsius, and vice versa. This display format is changed as follows:

a. Box in DISPLAY FORMAT on SETUP AND INFORMATION menu and press SELECT key to display a DISPLAY FORMAT screen.

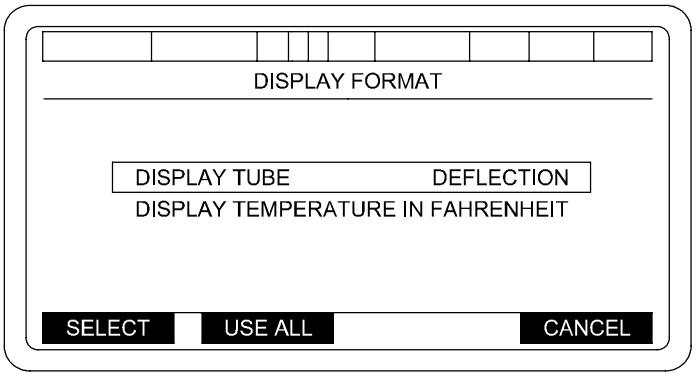


06pc196ma

b. To change deflection, box in DISPLAY TUBE DEFLECTION and press SELECT to display another DISPLAY FORMAT screen.

c. This screen asks the question: CHANGE TO AZIMUTH/DEFLECTION? Press the appropriate softkey, YES or NO. This will return the display to the original DISPLAY FORMAT screen.

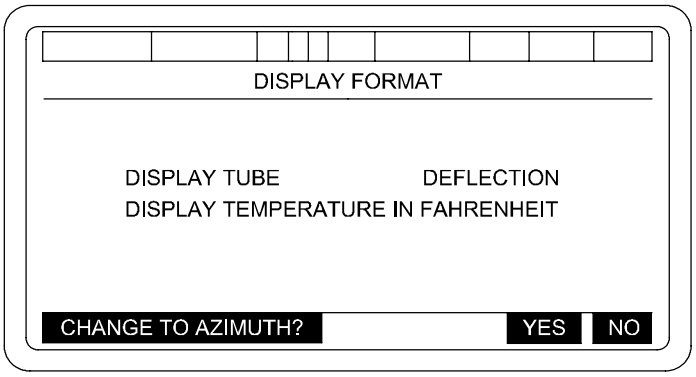


06pc197ma

# O-8 PDFCS FIRE MISSION - CONTINUED

## O-8.7 System Menus - Continued

O-8.7.10 Display Format - Continued

d. To change the temperature display, box in DISPLAY TEMPERATURE IN FAHRENHEIT and press SELECT key to display another DISPLAY FORMAT screen.

e. Answer screen question CHANGE TO CELSIUS/FAHRENHEIT? by pressing appropriate softkey.

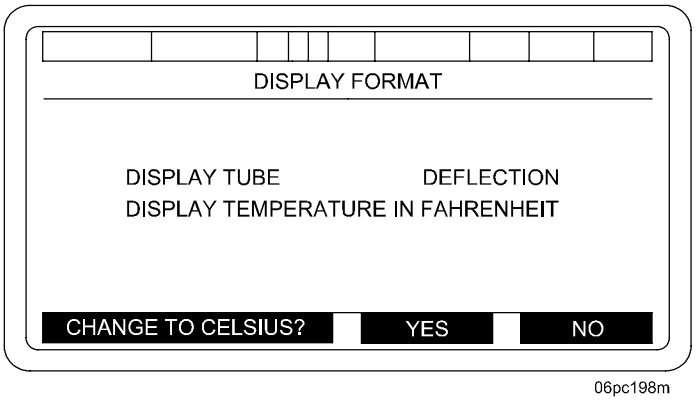


f. When original DISPLAY FORMAT screen is displayed, press USE ALL key to return to SETUP AND INFORMATION menu.

O-8.7.11 Display Intensity. Display intensity is set using the buttons on the left side of the PDFCS PDU. If DISPLAY INTENSITY on SETUP AND INFORMATION menu is selected, the following screen will be displayed.

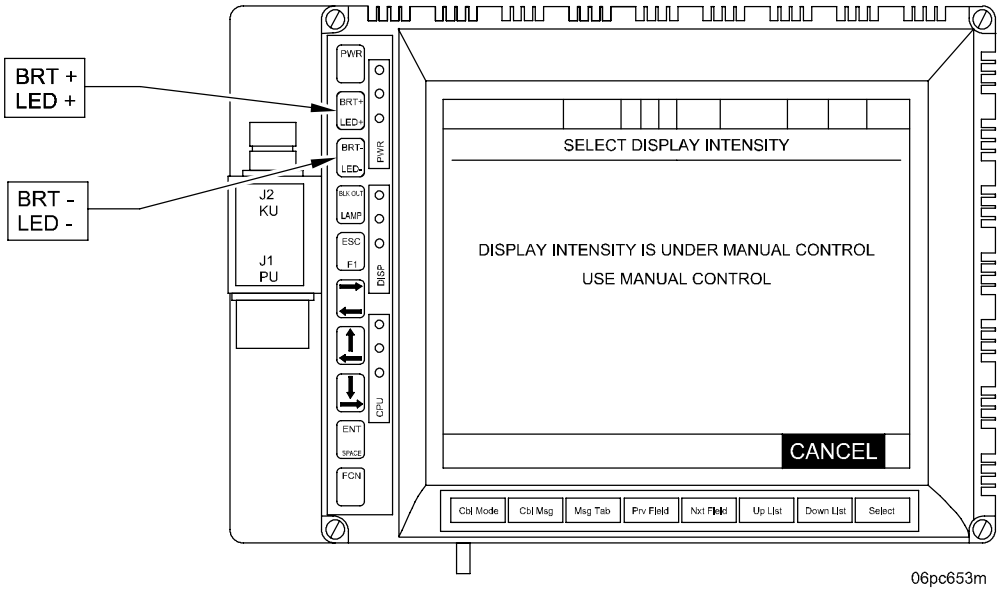

# O-8 PDFCS FIRE MISSION - CONTINUED

## O-8.7 System Menus - Continued

O-8.7.12 Manual Move Order. When it is necessary to move the howitzer without a move order from the POC, enter the movement data as follows:

a. Box in MANUAL MOVE ORDER on SETUP AND INFORMATION menu and depress SELECT key to display a MANUAL MOVE ORDER ENTRY screen.

b. Enter data by boxing in each data field and then typing in desired data. As each field is filled, press ENT key to enter data.

c. When all data has been entered, press USE ALL key. This will cause the SETUP AND INFORMATION screen to be displayed with MOVE ORD at the top. Press CANCEL key to display the MOVE ORDER screen (STEERTO or EMPLACE).

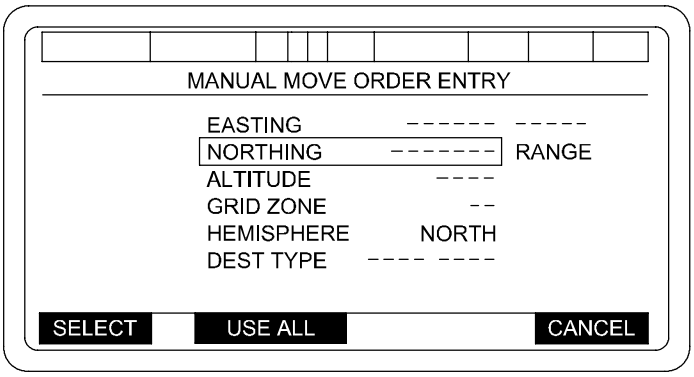


06pc262t

**NOTE**

- If the Move Order coordinates are outside the Map Mod, no PDFCS warning message will be issued. All Move Order coordinates should be checked with a map spot, or through some other secondary means to insure they are within the current Map Mod.
- If the Move Order coordinates are in an adjacent Grid Zone, the PDFCS will automatically convert these coordinates to the Map Mod Grid Zone. Once the STEER TO screen is displayed, the entered coordinates will be converted to the Map Mod Grid Zone. If a map spot is performed, the Map Mod Grid Zone will need to be extended into the adjacent Grid Zone.
- If Destination Type is to a FIRING POINT, Operator must input SECTOR OF FIRE prior to inputting a Manual Move Order.

# O-8 PDFCS FIRE MISSION - CONTINUED

## O-8.7 System Menus - Continued

O-8.7.12 Manual Move Order - Continued

### NOTE - CONTINUED

- Destination Types are: LOG POINT (for resupply), INIT POINT (for survey control point) and FIRE POINT.
- If DO NOT MOVE was on the screen before you start this move, the PDFCS will notify FDC that the howitzer is moving.
- RANGE shows the distance to the entered point from the current location based on easting and northing. It is not operator selectable. Move order distance will only be displayed up to 99,999 meters. If the value is 100,000 to 350,000 meters, "*****" will be displayed. If the value is more than 350,000 meters you will receive an error message, "DISTANCE EXCEEDS 350 KM" "ACK".
- If the position entered is above 84 degrees north or below 80 degrees south the entry will be rejected and you will receive an error message, "POSITION IS NOT VALID" "ACK".

O-8.7.13 GPS Control. Used to enhance positioning. The POC will instruct you when to use GPS Control.

### NOTE

Use according to unit SOP.

a. Select either USE GPS AIDING or USE ONLY CODED GPS DATA.

b. You will receive the following operator prompts.

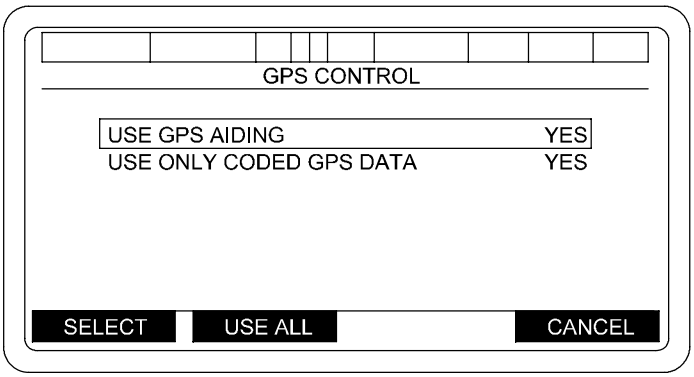


06pc201ma

OPERATOR PROMPTS (ON softkey LINE):

1. WHEN GPS AIDING SELECTED:

USE GPS AIDING? | YES | NO

2. WHEN USE ONLY CODED GPS DATA SELECTED:

USE ONLY CODED GPS? | YES | NO

NOTE: VALUES SHOWN ARE SYSTEM SUPPLIED DEFAULTS.

# O-8 PDFCS FIRE MISSION - CONTINUED

## O-8.7 System Menus - Continued

O-8.7.14 Record of Fire.

**NOTE**

- See Table O-17 for fields 1 thru 5 criteria.
- When more than one page is required to display choices, MORE BELOW and/or MORE ABOVE may be used to navigate between screens.

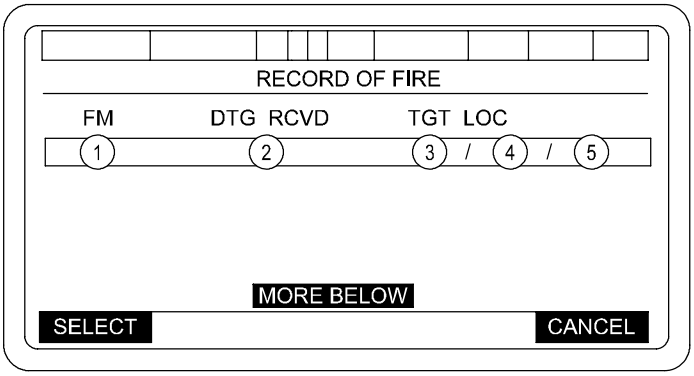


06pc191tg

**NOTE**

If there are no targets in the Record of Fire, the SELECT softkey will not be available.

SELECT : View firing data for a particular target

CANCEL : Return to SETUP AND INFORMATION menu

Mission data displayed in order from latest received to earliest

The following default criteria for FDC computed fire missions shall appear in the RECORD OF FIRE displays.

MET (CURRENT NVM)
POWDER TEMPERATURE (CURRENT NVM)
MVV (-99.9)
REGISTRATION DATA (NO DATA IS DISPLAYED)
TARGET LOCATION AND ELEVATION (ZEROS)

# O-8 PDFCS FIRE MISSION - CONTINUED

## O-8.7 System Menus - Continued

O-8.7.14 Record of Fire - Continued

**Table O-17. Record of Fire Select Target Display**

| Field | Description | Conditions for display |
|---|---|---|
| 1 | FM<br>Range/Values:<br>(1) MANUAL<br>(2) DIRECT<br>(3) AA0000-ZZ9999<br>(4) Blank | <br><br>(1) Indicates that an FDC Fire Commands mission was fired from the Paladin.<br>(2) Indicates that the Paladin has fired a mission in Direct Fire mode.<br>(3) Range values for target number received from the system initiating the Fire Mission, or Fire Commands initiated by the operator.<br>(4) Indicates that there are no fire missions in the Record of Fire. |
| 2 | DTG<br>Range/Values:<br>(1) YYMMDDHHMM<br>(2) Blank | <br><br>(1) The DTG Fire Mission was received.<br>(2) There are no fire missions in the record of fire. |
| 3 | Target Location Easting<br>Range/Values:<br>(1) 000000-999999<br>(2) Blank | <br><br>(1) Easting of the target location.<br>(2) Indicates that the Paladin has fired an FDC FIRE COMMANDS Fire Mission or there are no fire missions in the Record of Fire. |
| 4 | Target Location Northing<br>Range/Values:<br>(1) 0-9999999<br>(2) Blank | <br><br>(1) Northing of the target location.<br>(2) Indicates that the Paladin has fired an FDC FIRE COMMANDS Fire Mission or there are no fire missions in the Record of Fire. |
| 5 | Target Location Altitude<br>Range/Values:<br>(1) -400 to +9999<br>(2) Blank | <br><br>(1) Altitude of the target location.<br>(2) Indicates that the Paladin has fired an FDC FIRE COMMANDS Fire Mission or there are no fire missions in the Record of Fire. |

# O-8 PDFCS FIRE MISSION - CONTINUED

## O-8.7 System Menus - Continued

O-8.7.14 Record of Fire - Continued

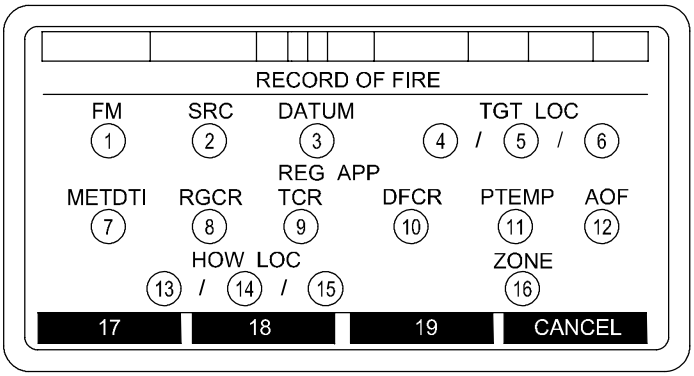


06pc191th

**Table O-18. Record of Fire Display**

| Field | Description | Conditions for display |
|---|---|---|
| 1 | FM<br>Range/Values:<br>(1) MANUAL<br>(2) DIRECT<br>(3) AA0000-ZZ9999<br><br>Resolution: NA<br>Default/Initial: NA<br>Units: NA | <br><br>(1) FDC FIRE COMMANDS computed mission was fired from the Paladin.<br>(2) Paladin has fired a mission in Direct Fire mode.<br>(3) Range values for target number received from FDC/Additional subscriber initiating the Fire Mission, or Paladin Fire Commands initiated by the operator. |
| 2 | SRC (Source of Mission)<br>Range/Values:<br>(1) FDC<br>(2) OPR<br>(3) OTH<br><br>Resolution: NA<br>Default/Initial: NA<br>Units: NA | <br><br>(1) Fire Mission was sent digitally from the FDC.<br>(2) Fire Mission is a FDC FIRE COMMANDS, DIRECT, or PALADIN FIRE COMMANDS Fire Mission.<br>(3) Fire Mission is received from an additional subscriber to the Paladin (i.e. not the FDC or backup FDC). |

# O-8 PDFCS FIRE MISSION - CONTINUED

## O-8.7 System Menus - Continued

O-8.7.14 Record of Fire - Continued

**Table O-18. Record of Fire Display - Continued**

| Field | Description | Conditions for display |
|---|---|---|
| 3 | DATUM<br>Range/Values:<br>(1) See appendix J.1-1 Spheroid and Datum table (not selectable by the operator on this display).<br>Resolution: NA<br>Default/Initial: NA<br>Units: NA | (1) Paladin will display the DATUM. |
| 4 | Target Location Easting<br>Range/Values:<br>(1) 000000-999999<br>(2) Blank<br>Resolution: NA<br>Default/Initial: Blank<br>Units: NA | (1) Easting of the target location.<br>(2) Indicates that the Paladin has fired an FDC FIRE COMMANDS Fire mission. |
| 5 | Target Location Northing<br>Range/Values:<br>(1) 0-9999999<br>(2) Blank<br>Resolution: NA<br>Default/Initial: Blank<br>Units: NA | (1) Northing of the target location.<br>(2) Indicates that the Paladin has fired an FDC FIRE COMMANDS Fire Mission. |

# O-8 PDFCS FIRE MISSION - CONTINUED

## O-8.7 System Menus - Continued

O-8.7.14 Record of Fire - Continued

**Table O-18. Record of Fire Display - Continued**

| Field | Description | Conditions for display |
|---|---|---|
| 6 | Target Location Altitude<br>Range/Values:<br>(1) -400 through +9,999<br>(2) Blank<br>Resolution: NA<br>Default/Initial: Blank<br>Units: NA | (1) Altitude of the target location.<br>(2) Indicates that the Paladin has fired an FDC FIRE COMMANDS Fire Mission. |
| 7 | METDTI (Metrological Correction)<br>Range/Values<br>(1) DDHH.M (where DD represents Day where HH represents Hour and M represents tenths of minutes.<br>(2) 1 0.0<br>Resolution: NA<br>Default/Initial: NA<br>Units: NA | (1) Date Time Group of the MET message that was applied to the Fire Mission.<br>(2) No MET message was received. |
| 8 | RGCR (Range Correction)<br>Range/Values:<br>(1) -4095 to 4095<br>(2) 0<br>Resolution: NA<br>Default/Initial: 0<br>Units: Meters | (1) A registration range correction was applied by the Paladin to the Fire Mission.<br>(2) There was no range correction applied by the Paladin or the mission is an FDC computed Fire Mission or FDC FIRE COMMANDS Fire Mission. |

# O-8 PDFCS FIRE MISSION - CONTINUED

## O-8.7 System Menus - Continued

O-8.7.14 Record of Fire - Continued

**Table O-18. Record of Fire Display - Continued**

| Field | Description | Conditions for display |
|---|---|---|
| 9 | TCR (Time Correction)<br>Range/Values<br>(1) -9.9 to 9.9<br>(2) 0.00<br>Resolution: NA<br>Default/Initial: 0.00<br>Units: Seconds | (1) A registration time correction was applied by the Paladin to the Fire Mission.<br>(2) There was no time correction applied by the Paladin or the mission is an FDC computed Fire Mission or an FDC FIRE COMMANDS Fire Mission. |
| 10 | DFCR (Deflection Correction)<br>Range/Values<br>(1) L 999 to R 999<br>(2) 0.00<br>Resolution: NA<br>Default/Initial: 0.00<br>Units: Mils | (1) A registration deflection correction was applied by the Paladin to the Fire Mission.<br>(2) There was no time correction applied by the Paladin or the mission is an FDC computed Fire Mission or an FDC FIRE COMMANDS Fire Mission. |
| 11 | PTEMP<br>Range/Values<br>(1) -40 to 145 F<br>Resolution: NA<br>Default/Initial: 70<br>Units: Degrees | (1) Propellant Temperature at the time the Fire Mission was processed. |
| 12 | AOF<br>Range/Values<br>(1) 0-6399<br>Resolution: NA<br>Default/Initial: NA<br>Units: Mils | (1) Azimuth of Fire at the time the mission was fired. |
| 13 | Howitzer Location Easting<br>Range/Values:<br>(1) 1 to 999999<br>Resolution: NA<br>Default/Initial: Blank<br>Units: NA | (1) Easting location of the Paladin during the Fire Mission. |

# O-8 PDFCS FIRE MISSION - CONTINUED

## O-8.7 System Menus - Continued

O-8.7.14 Record of Fire - Continued

**Table O-18. Record of Fire Display - Continued**

| Field | Description | Conditions for display |
|---|---|---|
| 14 | Howitzer Location Northing<br>Range/Values:<br>(1) 0 to 9999999<br>Resolution: NA<br>Default/Initial: Blank<br>Units: NA | (1) Northing location of the Paladin during the Fire Mission. |
| 15 | Howitzer Location Altitude<br>Range/Values:<br>(1) -400 to +9,999<br>Resolution: NA<br>Default/Initial: Blank<br>Units: NA | (1) Altitude of the Paladin during the Fire Mission. |
| 16 | Zone<br>Range/Values<br>(1) 1 to 60<br>(2) -1 to -60<br>Resolution: NA<br>Default/Initial: Blank<br>Units: NA | (1) Grid zone that the Paladin was located in during the Fire Mission (Northern Hemisphere).<br>(2) Grid zone that the Paladin was located in during the Fire Mission (Southern Hemisphere). |
| 17 | ADJ<br>Range/Values<br>(1) ADJ<br>(2) Blank<br>Resolution: NA<br>Default/Initial: Blank<br>Units: NA | (1) There is an adjust phase for the mission or when the mission ended before the Fire For Effect phase began.<br>(2) No adjust phase for the mission. |

# O-8 PDFCS FIRE MISSION - CONTINUED

## O-8.7 System Menus - Continued

O-8.7.14 Record of Fire - Continued

**Table O-18. Record of Fire Display - Continued**

| Field | Description | Conditions for display |
|---|---|---|
| 18 | FFE1<br>Range/Values:<br>(1) FFE1<br>(2) Blank<br>Resolution: NA<br>Default/Initial: Blank<br>Units: NA | (1) FFE1 phase during a mission.<br>(2) Fire Mission is an FDC FIRE COMMANDS or DIRECT or there was no FFE1 phase. |
| 19 | FFE2<br>Range/Values:<br>(1) FFE2<br>(2) Blank<br>Resolution: NA<br>Default/Initial: Blank<br>Units: NA | (1) There was a second Fire for Effect phase for the mission.<br>(2) There was no FFE2 phase for the mission. |

# O-8 PDFCS FIRE MISSION - CONTINUED

## O-8.7 System Menus - Continued

O-8.7.14 Record of Fire - Continued

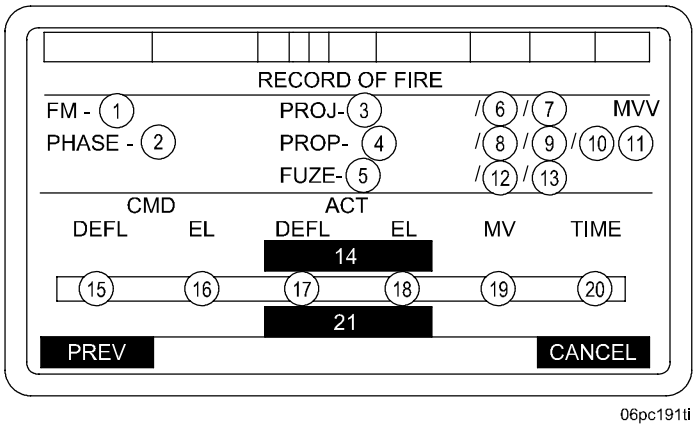


06pc191ti

PREV : Returns to previous screen for viewing pre-shot data of different phase

CANCEL : Return to RECORD OF FIRE menu

**Table O-19. Record of Fire Data Display**

| Field | Description | Conditions for display |
|---|---|---|
| 1 | FM<br>Range/Values:<br>(1) MANUAL<br>(2) DIRECT<br>(3) AA0000-ZZ9999<br>Resolution: NA<br>Default/Initial: Blank<br>Units: NA | (1) An operator initiated FDC FIRE COMMANDS computed mission was fired from the Paladin.<br>(2) A mission was fired in Direct Fire mode.<br>(3) Range values for target number received from FDC or additional subscribers initiating the Fire Mission, or Paladin Fire Commands initiated by the operator. |
| 2 | PHASE<br>Range/Values:<br>(1) ADJ<br>(2) FFE1<br>(3) FFE2<br>Resolution: NA<br>Default/Initial: Blank<br>Units: NA | (1) Adjust Fire phase.<br>(2) Fire for Effect 1 phase.<br>(3) Fire for Effect 2 phase. |

# O-8 PDFCS FIRE MISSION - CONTINUED

## O-8.7 System Menus - Continued

O-8.7.14 Record of Fire - Continued

**Table O-19. Record of Fire Data Display - Continued**

| Field | Description | Conditions for display |
|---|---|---|
| 3 | PROJ<br>Range/Values:<br>(1) PROJ (shell) model only (see table O-6 for US munitions)<br>Resolutions: NA<br>Default/Initial: Blank<br>Units: NA | (1) Initial projectile fired during the selected phase (ADJ, FFE1, or FFE2) of the Fire Mission. |
| 4 | PROP<br>Range/Values<br>(1) PROP model only (see table O-6 for US munitions)<br>Resolution: NA<br>Default/Initial: Blank<br>Units: NA | (1) Initial propellant fired during the selected phase (ADJ, FFE1, or FFE2) of the Fire Mission. |
| 5 | FUZE<br>Range/Values:<br>(1) FUZE model only (see table O-6 for US munitions)<br>(2) Blank<br>Resolution: NA<br>Default/Initial: Blank<br>Units: NA | (1) Initial fuze fired during the selected phase (ADJ, FFE1, or FFE2) of the Fire Mission.<br>(2) Projectile XM982, M982, or M712 (Copperhead) was fired. |

# O-8 PDFCS FIRE MISSION - CONTINUED

## O-8.7 System Menus - Continued

O-8.7.14 Record of Fire - Continued

**Table O-19. Record of Fire Data Display - Continued**

| Field | Description | Conditions for display |
|---|---|---|
| 6 | Projectile Lot<br>Range/Values:<br>(1) A-Z<br><br>Resolution: NA<br>Default/Initial: Blank<br>Units: NA | (1) Projectile lot designator of the projectile fired during the selected phase (ADJ, FFE1, or FFE2) of the Fire Mission. |
| 7 | Projectile CC (Country Code)<br>Range/Values:<br>(1) Projectile CC (see table O-6 for US munitions)<br>Resolution: NA<br>Default/Initial: Blank<br>Units: NA | (1) CC of the projectile fired during the selected phase (ADJ, FFE1, or FFE2) of the Fire Mission. |
| 8 | Propellant Lot<br>Range/Values:<br>(1) A-Z<br><br>Resolution: NA<br>Default/Initial: Blank<br>Units: NA | (1) Propellant lot designator of the propellant fired during the selected phase (ADJ, FFE1, or FFE2) of the Fire Mission. |
| 9 | Propellant Charge<br>Range/Values:<br>(1) Prop charge only (see table O-6 for US munitions)<br>Resolution: NA<br>Default/Initial: Blank<br>Units: NA | (1) Propellant charge of the propellant fired during the selected phase (ADJ, FFE1, or FFE2) of the Fire Mission. |

# O-8 PDFCS FIRE MISSION - CONTINUED

## O-8.7 System Menus - Continued

O-8.7.14 Record of Fire - Continued

**Table O-19. Record of Fire Data Display - Continued**

| Field | Description | Conditions for display |
|---|---|---|
| 10 | Propellant CC (Country Code)<br>Range/Values:<br>(1) Projectile CC (see table O-6 for US munitions)<br>Resolution: NA<br>Default/Initial: NA<br>Units: NA | (1) Propellant Country Code for the propellant fired during the selected phase (ADJ, FFE1, or FFE2) of the Fire Mission. |
| 11 | MVV<br>Range/Values:<br>(1) -99.9 to 99.9<br>Resolution: NA<br>Default/Initial: 0.0<br>Units: NA | (1) Total MVV applied to the selected phase (ADJ, FFE1, or FFE2) of the Fire Mission. |
| 12 | Fuze Setting<br>Range/Values:<br>(1) PD<br>(2) DLY<br>(3) VT<br>(4) 00.0 to 500.0<br>(5) NN PPP<br>Resolution: NA<br>Default/Initial: 0.0 | (1) Fuze is fired with a PD setting during the selected phase (ADJ, FFE1, or FFE2) of the Fire MIssion.<br>(2) Fuze is fired with a DLY setting during the selected phase (ADJ, FFE1, or FFE2) of the Fire Mission.<br>(3) XM982 or M982 is fired with a VT setting during the selected phase (ADJ, FFE1, or FFE2) of the Fire Mission.<br>(4) Fuze time setting for the initial round of the selected phase (ADJ, FFE1, or FFE2) of the Fire Mission.<br>(5) NN PPP (where NN is the fuze setting and PPP is the Pulse Repetition Frequency Code.) |
| 13 | FUZE CC (Country Code)<br>Range/Values<br>(1) FUZE CC (see table O-6 for US munitions)<br>Resolution: NA<br>Default/Initial: NA<br>Units: NA | (1) Fuze country code of the fuze fired during the selected phase (ADJ, FFE1, or FFE2) of the Fire Mission. |

# O-8 PDFCS FIRE MISSION - CONTINUED

## O-8.7 System Menus - Continued

O-8.7.14 Record of Fire - Continued

**Table O-19. Record of Fire Data Display - Continued**

| Field | Description | Conditions for display |
|---|---|---|
| 14 | MOVE ABOVE<br>Range/Values:<br>(1) MORE ABOVE<br>(2) DATA (for rounds shot)<br>Resolution: NA<br>Default/Initial: Blank<br>Units: NA | (1) Used to navigate between screens when there is more DATA that can be viewed on this display by scrolling.<br>(2) Most recent DATA (up to the tenth shot) when there are no more than 4 recorded rounds fired for the selected phase or when scrolling is enabled. |
| 15 | CMD DEFL<br>Range/Values:<br>(1) 0.0 through 6399.9<br>Resolution: NA<br>Default/Initial: Blank<br>Units: Mils | (1) Command deflection for each round. |
| 16 | CMD EL<br>Range/Values:<br>(1) -200.0 through +1333.0<br>Resolution: NA<br>Default/Initial: Blank<br>Units: Mils | (1) Command elevation for each round. |
| 17 | ACT DEFL<br>Range/Values:<br>(1) 0.0 through 6399.9<br>Resolution: NA<br>Default/Initial: Blank<br>Units: Mils | (1) Actual deflection for each round at the time shot was detected. |

# O-8 PDFCS FIRE MISSION - CONTINUED

## O-8.7 System Menus - Continued

O-8.7.14 Record of Fire - Continued

**Table O-19. Record of Fire Data Display - Continued**

| Field | Description | Conditions for display |
|---|---|---|
| 18 | ACT EL<br>Range/Values:<br>(1) -200.0 through +1333.0<br>Resolution: NA<br>Default/Initial: Blank<br>Units: Mils | (1) Actual Elevation for each round at the time shot was detected. |
| 19 | MV (Muzzle Velocity)<br>Range/Values:<br>(1) 0 to 999.9<br>Resolution: NA<br>Default/Initial: 0.0<br>Units: Meters Per Second | (1) Muzzle velocity for each round of the Fire Mission. |
| 20 | TIME<br>Range/Values:<br>(1) 0000-5959<br>Resolution: NA<br>Default/Initial: NA<br>Units: Minutes/Seconds | (1) Time the round was fired. |
| 21 | MORE BELOW<br>Range/Values:<br>(1) MORE BELOW<br>(2) DATA (for rounds shot)<br>Resolution: NA<br>Default/Initial: Blank<br>Units: NA | (1) Used to navigate between screens when there is more DATA that can be viewed on this display by scrolling.<br>(2) Displayed when there are no more than 4 recorded rounds fired for the selected phase or the first shot DATA appears. |

# O-8 PDFCS FIRE MISSION - CONTINUED

## O-8.7 System Menus - Continued

O-8.7.14.1 Fire Mission Mode.

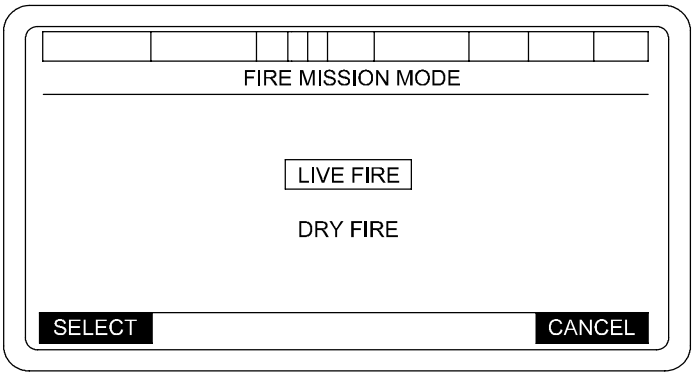


06pc269t

- When LIVE FIRE is selected, EFC updates shall be performed upon EOM/Abort Fire Mission Processing.
- When DRY FIRE is selected, Muzzle Velocity processing and EFC processing shall not be performed. All other functions are performed as they would be in a normal Live Fire Mode. An operator warning “D” shall be shown in position 4 of the Function Status Field. This warning shall remain in all screens until LIVE FIRE is selected.
- Pressing SELECT will transition display to the SETUP AND INFORMATION menu with the appropriate value shown in the Function Status field.

O-8.7.15 Muzzle Velocity. For more accurate firing data when computing ballistics, measured muzzle velocities are entered into the PDFCS. Also, muzzle velocities can be entered as they are measured. This is performed as followed:

**WARNING**

Ensure that correct propellant temperature and shell weights are entered in PDFCS. Failure to comply will result in incorrect ballistic computations. This could result in injury or death to friendly troops.

# O-8 PDFCS FIRE MISSION - CONTINUED

## O-8.7 System Menus - Continued

O-8.7.15 Muzzle Velocity - Continued

a. Box in MUZZLE VELOCITY on SETUP AND INFORMATION menu and press SELECT key to display a MUZZLE VELOCITY VARIATION screen.

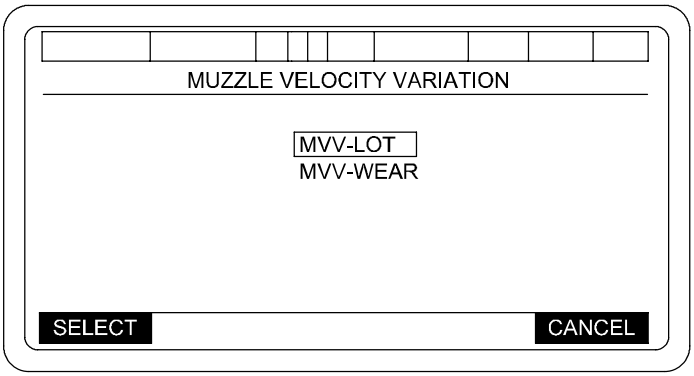


06pc266t

b. To delete muzzle velocity, box in MVV-LOT from the MUZZLE VELOCITY VARIATION screen and press SELECT.

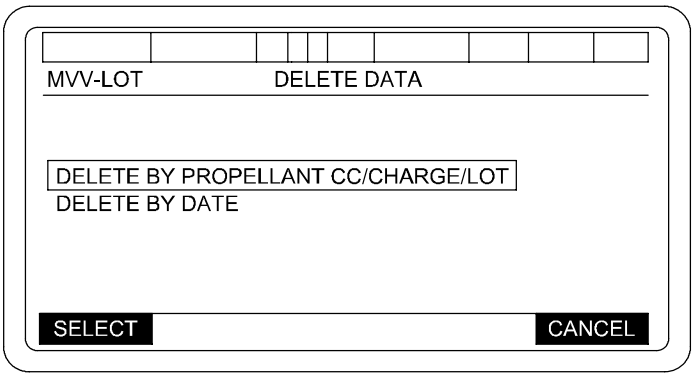


06pc266ta

# O-8 PDFCS FIRE MISSION - CONTINUED

## O-8.7 System Menus - Continued

O-8.7.15 Muzzle Velocity - Continued

c. To delete muzzle velocity by propellant cc/charge/lot, box in DELETE BY PROPELLANT CC/CHARGE/LOT and press SELECT.

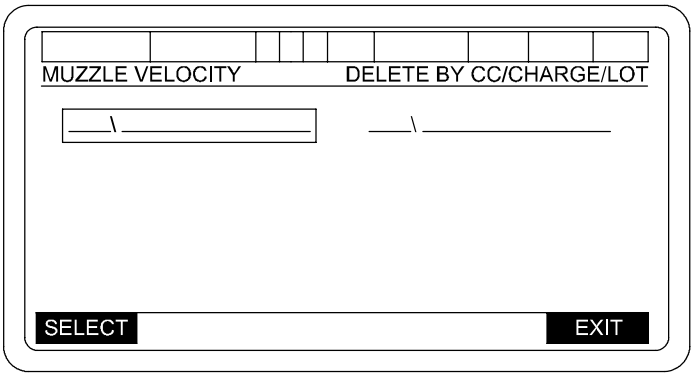


06pc273ta

Lots are displayed in ascending ASCII sort sequence by country, manufacturer's propellant lot, and then propellant charge. When SELECT softkey is pressed the short message "DELETE VELOCITY DATA" "YES" "NO" will be displayed. YES causes the MVV Lot data for the selected propellant lot to be deleted from the display. NO allows the re-selection of a propellant lot. While extended lot codes are being retrieved and sorted for display, the following message shall be displayed:

"RETRIEVING LIST PLEASE WAIT"

If no lots are available for deletion, the SELECT key will be blanked, you will have a CANCEL at softkey 4 and the message "NO LOTS TO DELETE" will be displayed.

If there is more than one page of entries in the MVV-Lot database you will have a NEXT PAGE at softkey 2 and PREV PAGE at softkey 3. If the first page of entries is displayed, the PREV PAGE softkey will be blanked. If the last page of entries is displayed, the NEXT PAGE softkey will be blanked.

EXIT replaces the CANCEL softkey once a lot has been deleted. When the EXIT softkey is pressed, the message "PERM DELETE LOTS" "YES" "NO" shall be displayed. If YES is selected, the propellant lots will be deleted from the MVV-Lot Database. If NO is selected, propellant lots shall not be deleted from the MVV-Lot Database.

If the entry has an asterisk (*) in front of the country code, then that entry has a 5% radial impact error. This error must be considered to ensure accurate fire.

# O-8 PDFCS FIRE MISSION - CONTINUED

## O-8.7 System Menus - Continued

O-8.7.15 Muzzle Velocity - Continued

d. To delete muzzle velocity by the date box in DELETE BY DATE and press SELECT.

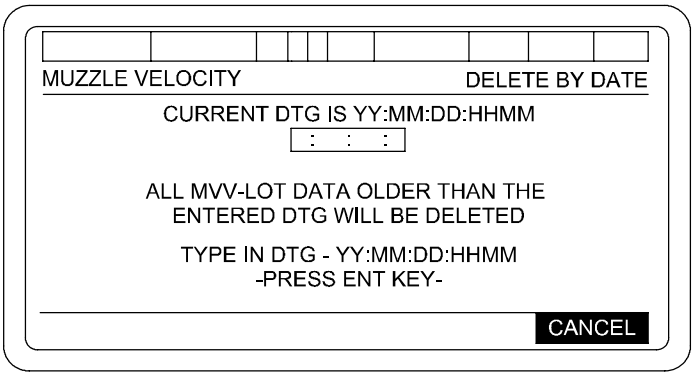


06pc267t

When ENT key is pressed, a validity check is performed on the entered date/time. If the date/time is invalid, you will receive a short error message: "INVALID DTG VALUE" "ACK". You will be required to enter a new Date/Time value. If the date/time data is valid, a short message "DELETE MVV" "YES" "NO". YES causes all MVV Lot data older than the entered DTG to be deleted. NO allows re-entry of the DTG.

e. To update MUZZLE VELOCITY VARIATION tube wear information, box in MVV-WEAR from the MUZZLE VELOCITY VARIATION screen and press SELECT.

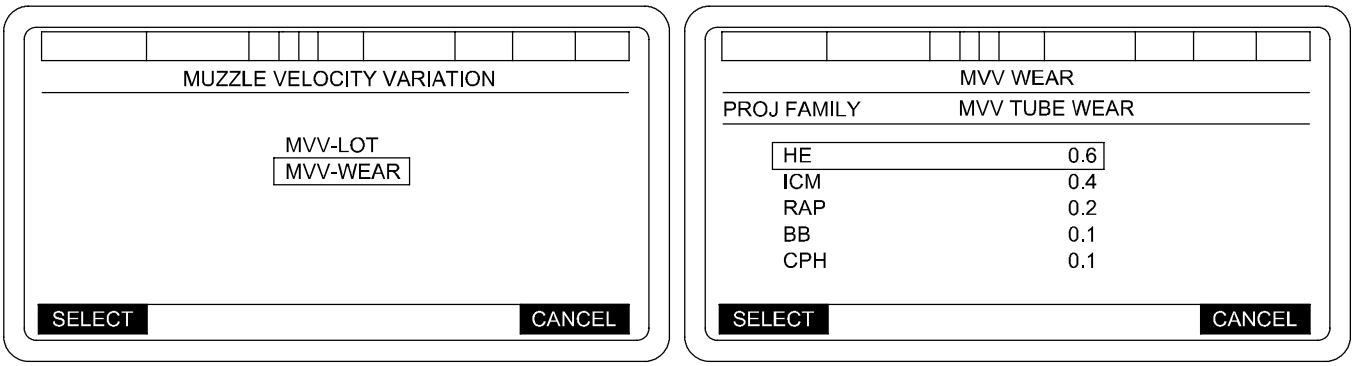


06pc267tb

When an entry has been selected the "+/-" will be displayed at softkey 2. The phrase "ENTER A VALUE BETWEEN -49.9 AND +49.9" and "PRESS ENT KEY" will be displayed. If the value is greater than +/- 49.9 you will receive a short error message: "VALUE TOO BIG" "ACK" or "VALUE TOO SMALL" "ACK". The value will be returned to the previous value displayed and allow re-entry. When you have updated an entry with a different value, UPDATE will be displayed at softkey 2. Press UPDATE. This will update the MVV-Wear database and return to the MUZZLE VELOCITY VARIATION screen.

# O-8 PDFCS FIRE MISSION - CONTINUED

## O-8.7 System Menus - Continued

O-8.7.16 Operational Maintenance Transition.

The PDFCS will provide the capability for the PDFCS operator to transition from NORMAL OPERATIONAL MODE functions to MAINTENANCE MODE functions and back to NORMAL OPERATIONAL MODE without having to POWER DOWN, perform SYSTEM RESTART, or perform NORMAL OPERATIONAL MODE initialization procedures. This capability will only be available when the PDFCS has successfully completed a NORMAL OPERATIONAL MODE initialization. Selection of the MAINTENANCE MODE from the PDFCS MODE SELECTION display will not allow the PDFCS operator to transition to NORMAL OPERATIONAL MODE without first having to POWER DOWN, perform SYSTEM RESTART, or do a NORMAL OPERATIONAL MODE "INITIALIZATION" procedure.

When MAINTENANCE MODE functions are selected from the PDFCS NORMAL OPERATIONAL MODE, the PDCU will be directed to limit instructive testing to only respond to Fire Mission requests. When MAINTENANCE MODE is entered from the PDFCS SELECT OPERATIONAL MODE display, the PDCU will be allowed to perform its full range of intrusive tests.

If a Fire Mission is received while the PDFCS is in a MAINTENANCE MODE function which was activated from the NORMAL OPERATIONAL MODE, the operator will be prompted to either accept or reject the mission. NORMAL OPERATIONAL acceptance of the mission will automatically terminate all MAINTENANCE MODE function activity and transition to NORMAL OPERATIONAL MODE Fire Mission processing. Operator rejection of the mission will cause an operator ABORT of the Fire Mission and will cause the PDFCS to remain in the currently active MAINTENANCE MODE function.

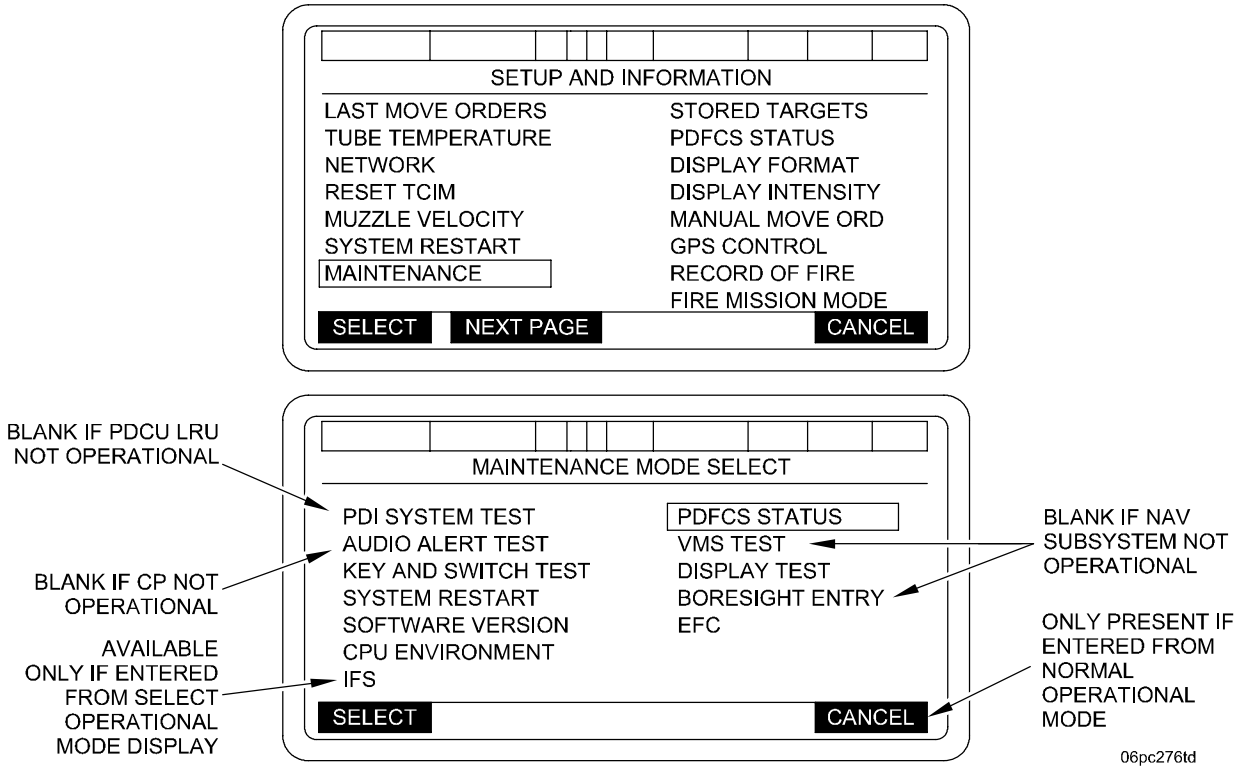

# O-9 PDFCS AND PDI FAULT DETECTION.

## O-9.1 Power Up Built-In-Test (BIT).

The BIT is a self-test of the PDFCS. This test occurs when the vehicle MASTER power is ON and the PDFCS POWER switch (located on the PDU), is placed to ON. By placing the PDFCS POWER switch and PCU-2 circuit breakers to ON, the PDU will display the screen shown.

As each of the six subsystems is tested, the "--" will change and provide a subsystem condition. An OK condition (see illustration below), indicates a subsystem is 100% functional.

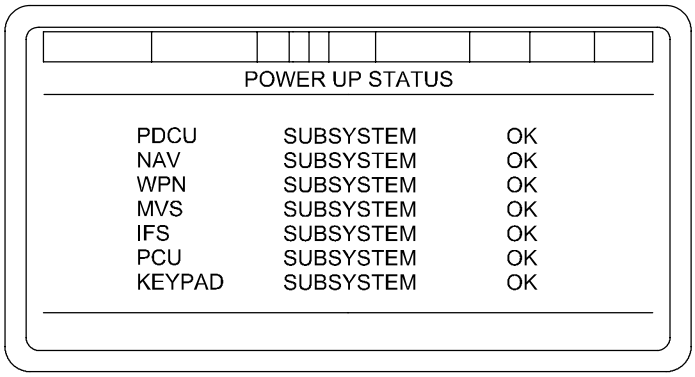


06pc279tc

**NOTE**

If PDU contains an incorrect configuration, the PDFCS will not allow the operator to select normal operations until a correct PDU software configuration is downloaded.

When configuration verification checking indicates that the executed software configuration is not the same as the acquired software configuration, a short error message "INVALID SOFTWARE CONFIGURATION" "ACK" will appear on the sofkey label line of the PDU.

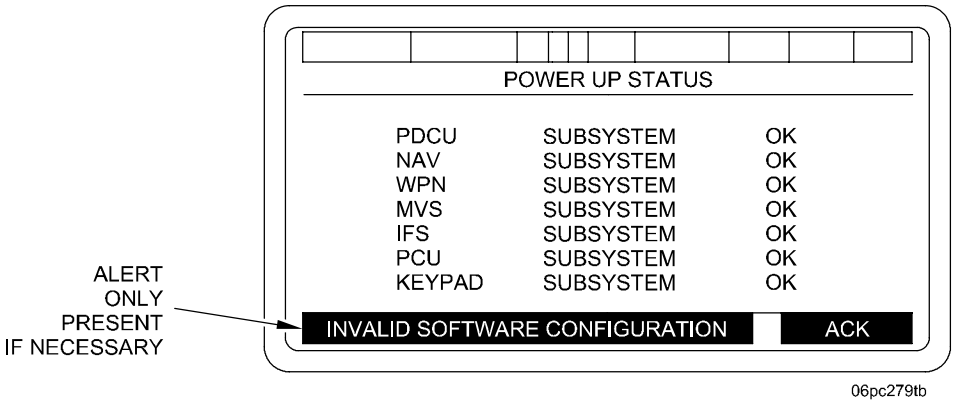


06pc279tb

When the message is acknowledged, the PDFCS will proceed to the SELECT OPERATIONAL MODE menu. To view detailed software configuration information for each LRU, MAINTENANCE should be selected, IAW procedure in para O-9.2.

# O-9 PDFCS AND PDI FAULT DETECTION - CONTINUED

## O-9.1 Power Up Built-In-Test (BIT) - Continued

The display shown in the example below illustrates two conditions, DEGRADED and OUT.

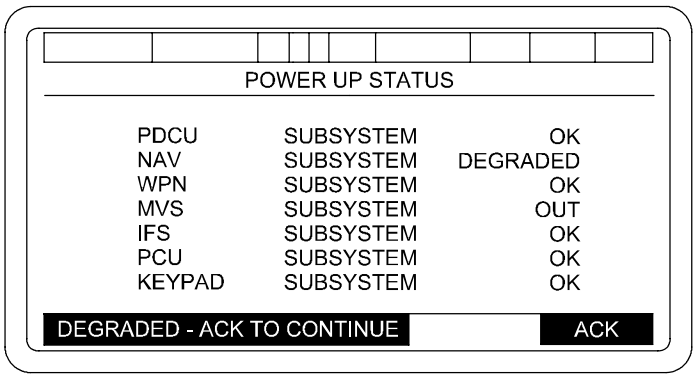


06pc077mf

The DEGRADED condition indicates a subsystem is not 100% functional. When a degraded condition exists, it will be indicated in field 7 by one or a combination of these letters with the following meaning:

N - Navigation
A - GPS Aiding
C - Communication Processing
W - Weapon Controller

These two conditions, OUT and DGRD, will be tested to determine where the fault exists and the extent of the fault. After a fault has been detected (OUT or DGRD condition during self-test) press the illuminated softkey beneath the word ACK. After pressing the ACK key, the screen shown below will be displayed.

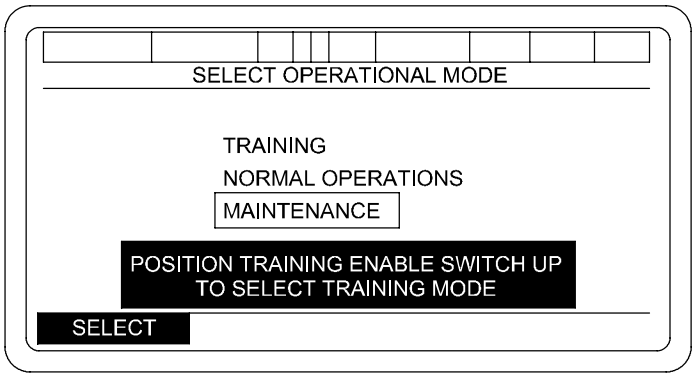


06pc567ma

The display above depicts three modes: TRAINING, NORMAL OPERATION and MAINTENANCE. To select MAINTENANCE MODE, box in MAINTENANCE as shown in the illustration above. Press illuminated softkey beneath the word SELECT to enter maintenance mode master menu.

# O-9 PDFCS AND PDI FAULT DETECTION - CONTINUED

## O-9.1 Power Up Built-In-Test (BIT) - Continued

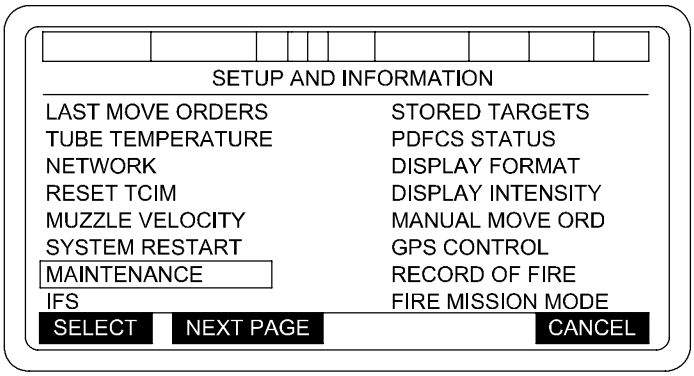


06pc276tb

The PDFCS also provides the capability for the PDFCS operator to transition from Normal Operational Mode functions to Maintenance Mode functions and back to Normal Operational Mode without having to perform a power down sequence, system restart, or Normal Operational Mode initialization procedures. This capability shall only be available when the PDFCS has successfully completed a Normal Operational Mode initialization. Selection of the Maintenance Mode from the PDFCS Mode Selection display shall not allow the PDFCS operator to transition to Normal Operational Mode without first performing either a power down sequence or a system restart.

When Maintenance Mode functions are selected from the PDFCS Operational Mode, the PDI shall be directed to limit intrusive testing to only those tests which will not impact the ability of the PDFCS to quickly respond to fire mission requests. When Maintenance Mode is entered from the PDFCS Mode Selection display, the PDI shall be allowed to perform its full range of intrusive tests.

If a fire mission is received while the PDFCS is in a Maintenance Mode function which was activated from the Operational Mode, the operator shall be prompted to either accept or reject the mission. Operator acceptance of the mission shall automatically terminate all Maintenance Mode function activity and transition to Normal Operational Mode fire mission processing. Operator rejection of the mission shall cause an operator abort of the fire mission and shall cause the PDFCS to remain in the currently active Maintenance Mode function.

# O-9 PDFCS AND PDI FAULT DETECTION - CONTINUED

## O-9.2 PDFCS Status.

To display the PDFCS STATUS menu:

a. Select MAINTENANCE from the SETUP AND INFORMATION menu. Press SELECT key. This will cause the MAINTENANCE MODE SELECT menu to be displayed.

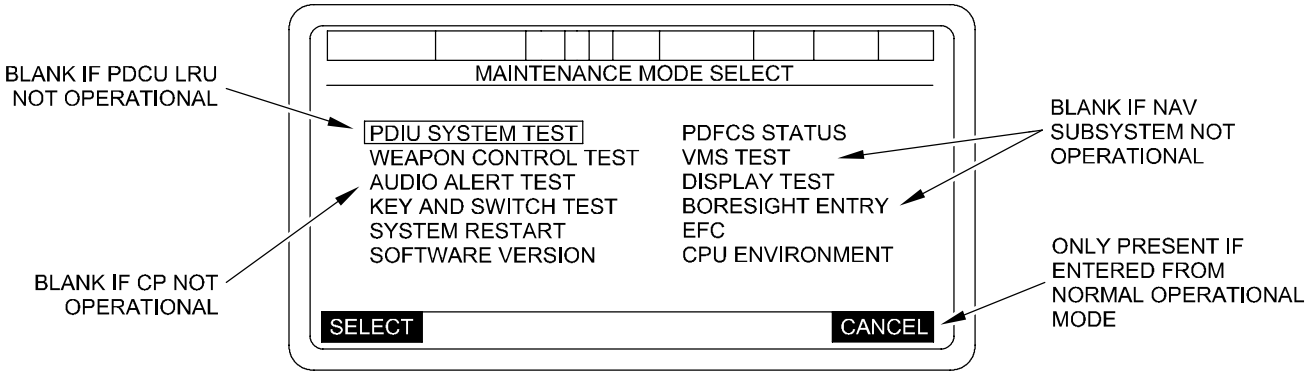


06pc122td

If MAINTENANCE is selected from NORMAL OPERATIONAL MODE, the MAINTENANCE screen will display SELECT and CANCEL options above softkeys 1 and 4 in field 16.

b. Select PDFCS STATUS from the MAINTENANCE MODE SELECT menu. Press SELECT key. This will cause the PDFCS STATUS menu to be displayed.

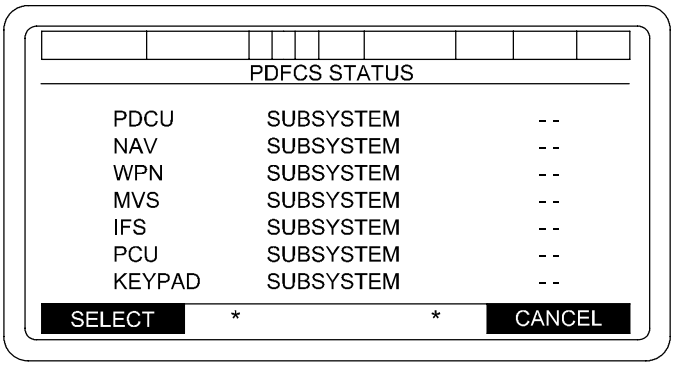


06pc640mb

The PDFCS STATUS menu will display the various subsystem faults. Using this fault list (showing Degraded Mode of each subsystem), you will be able to determine if Degraded Mode is acceptable depending on mission requirements.

# O-9 PDFCS AND PDI FAULT DETECTION - CONTINUED

## O-9.2 PDFCS Status - Continued

Certain degraded subsystems will not interfere with PDFCS operation or mission capability. It is important to know, however, which subsystem is degraded (and which BIT item has failed). Knowing which failure to compensate for/correct will allow you to carry on with your mission. The various LRUs communicate/send messages periodically within PDFCS. Whenever an LRU has not sent a message within a certain amount of time, the LRU timer sends an LRU FAILED message. In the event you get an LRU FAILED message, go into MAINTENANCE menu, check PDFCS STATUS. If LRU failed, notify unit maintenance.

The PDFCS STATUS menu is used by unit maintenance personnel, as well as by the operator. The operator must notify unit maintenance of any subsystem listed with a status of DEGRADED or -- (OUT), then no faults within that subsystem are indicated. Look at each subsystem carefully.

Select the subsystem in question. Additional information will be displayed to identify where the fault lies. There is no additional information for PDU and KEYPAD.

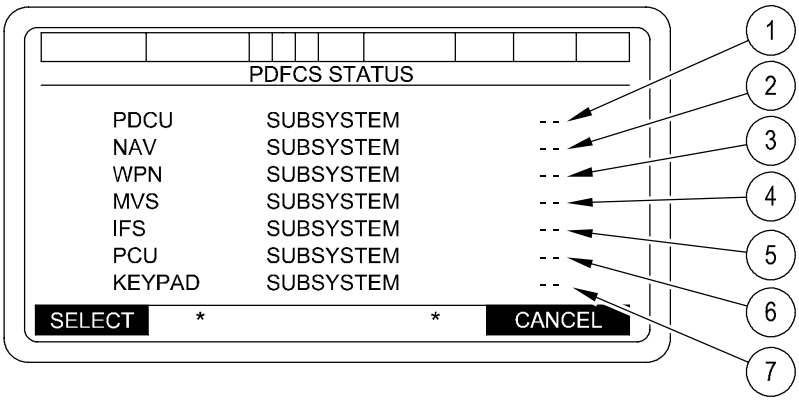


1 = (OK, DEGRADED, - -)

2 = (OK, DEGRADED, - -)

3 = (OK, DEGRADED, - -)

4 = (OK, - -) Where - - indicates that the PDFCS could not connect to the MVS, or OUT

5 = (DEG - MNT, DEG,- GPS, DEG - BAT, OK, - -) Where - - indicates status not determined, or OUT

6 = (OK, DEGRADED, - -) Where - - indicates PDCU failure that prevents PCU status from being determined, or OUT

7 = (OK, DEGRADED, - -) Where - - indicates PDCU failure that prevents KEYPAD status from being determined, or OUT

SELECT = SELECT A SUBSYSTEM

CANCEL = CANCEL and return to SETUP AND INFORMATION menu or INTERNAL MAINTENANCE menu

* = No test appears for these softkeys. Pressing FUNCTION KEY 2 or 3 will clear ET SIMULATED FAILURES

06pc641mb

# O-9 PDFCS AND PDI FAULT DETECTION - CONTINUED

## O-9.2 PDFCS Status - Continued

O-9.2.1 PDCU SUBSYSTEM STATUS Display.

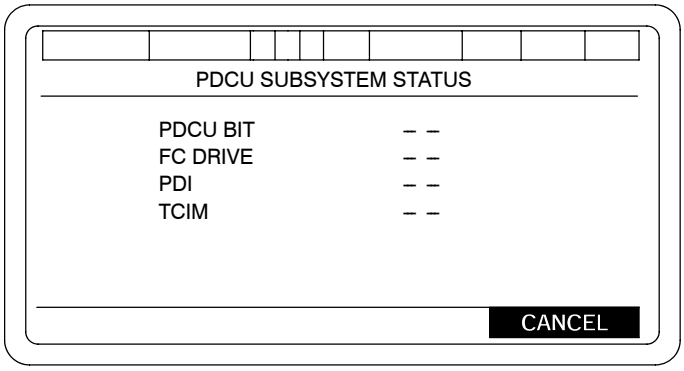


– – = (OK, FAIL)

CANCEL = Return to the PDFCS STATUS display

06pc642m

O-9.2.2 NAV SUBSYSTEM STATUS Display.

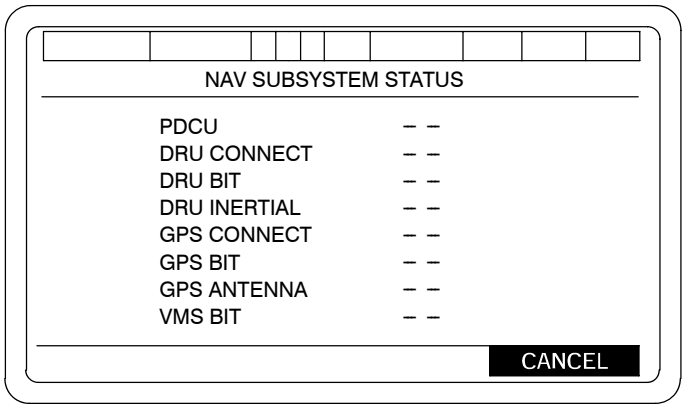


– – = (OK, FAIL)

CANCEL = Return to the PDFCS STATUS display

06pc643m

# O-9 PDFCS AND PDI FAULT DETECTION - CONTINUED

## O-9.2 PDFCS Status - Continued

O-9.2.3 WPN SUBSYSTEM STATUS Display.

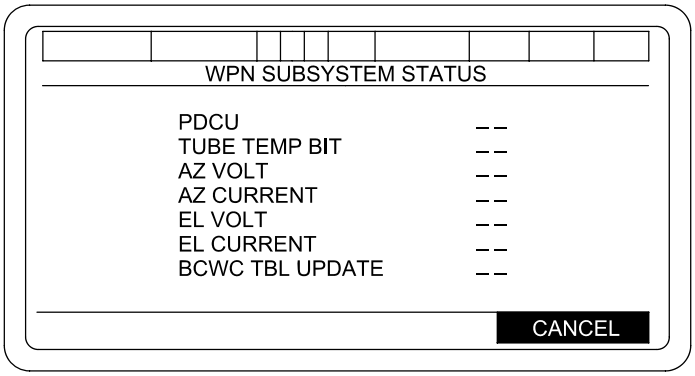


_ _ = (OK, FAIL)

CANCEL = Return to the PDFCS STATUS display

06pc644ma

O-9.2.4 MVS SUBSYSTEM STATUS Display.

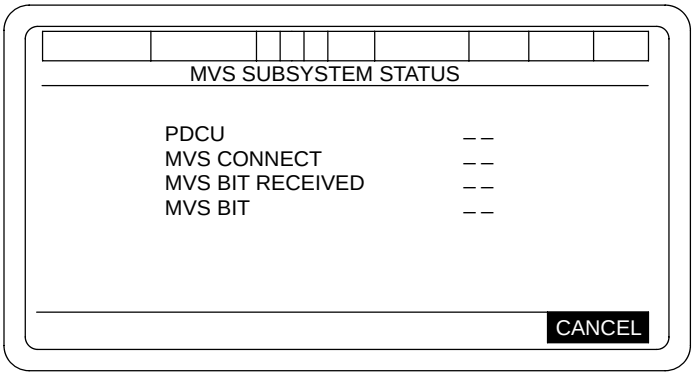


_ _ = (OK, FAIL)

CANCEL = Return to the PDFCS STATUS display
= Press CANCEL twice,
returns to MAINTENANCE MODE SELECT
display

06pc645m

# O-9 PDFCS AND PDI FAULT DETECTION - CONTINUED

## O-9.2 PDFCS Status - Continued

O-9.2.5 IFS SUBSYSTEM STATUS Display.

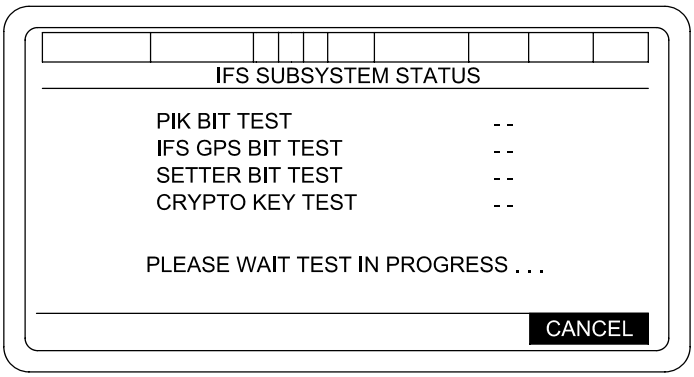


- - = (OK, FAIL)

CANCEL = Return to the PDFCS STATUS display

06pc128td

# O-9 PDFCS AND PDI FAULT DETECTION - CONTINUED

## O-9.3 PDI System Test.

Ensure NAV alignment is complete prior to performing PDI system test.

To start the PDI SYSTEM TEST, move the cursor with the arrow keys until the PDI SYSTEM TEST is boxed, as shown below.

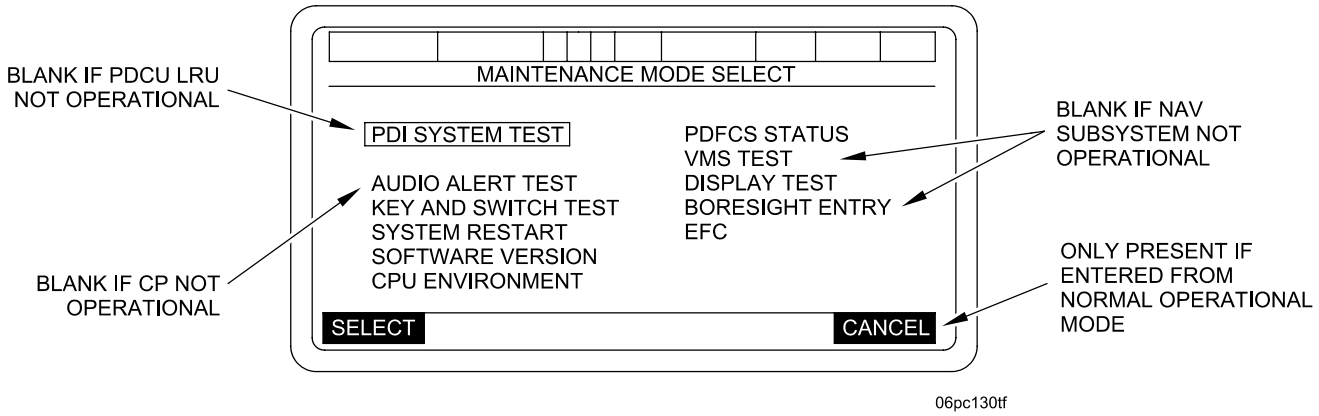


Press SELECT. The screen will display the prompt “ARE YOU SURE” “YES” “NO”. Press YES. The screen will display the following message:

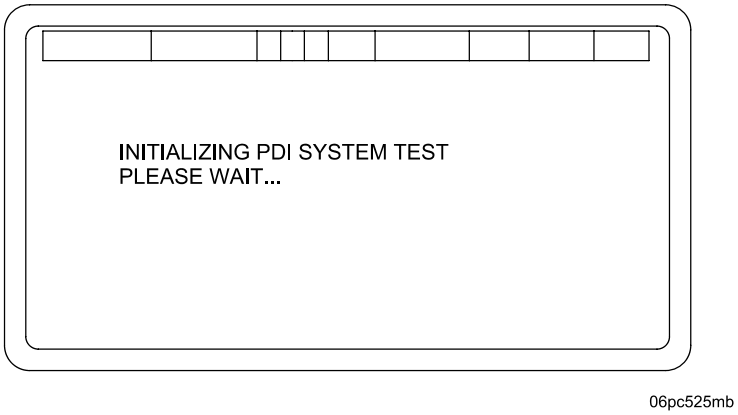


This message requires no action on your part. In 3 to 5 seconds, when the system is ready, it will be replaced with a menu display like the following:

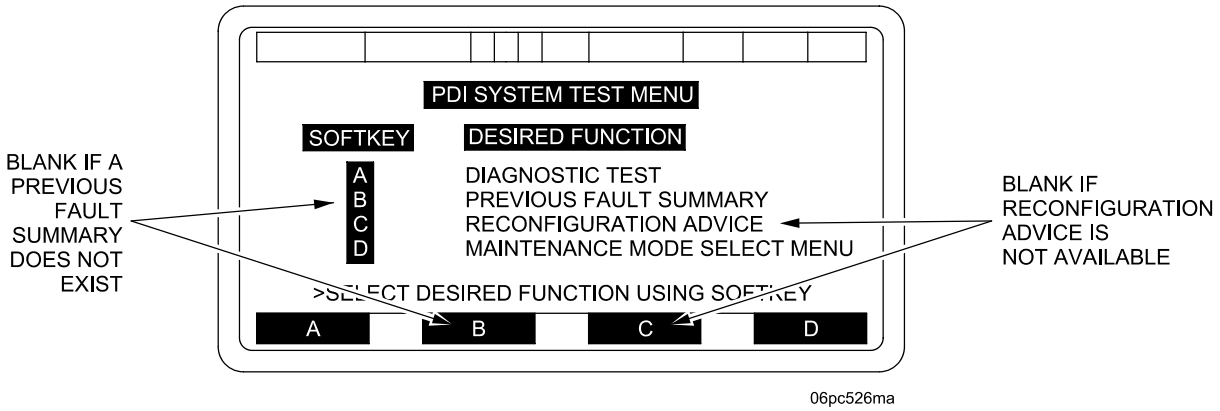


This menu allows you to select whichever function you wish to perform.

# O-9 PDFCS AND PDI FAULT DETECTION - CONTINUED

## O-9.3 PDI System Test - Continued

**NOTE**

The previous Fault Summary and Reconfiguration Advice functions are not always available. These options will not be displayed if their functions cannot be performed. (The different menu screens that can be seen because of this are shown at the end of the description.)

Each of the four functions will now be described separately.

a. DIAGNOSTIC TEST

To perform DIAGNOSTIC TEST, press the “A” softkey.

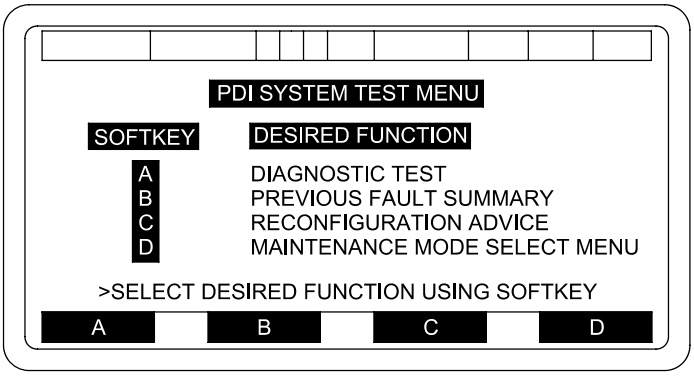


06pc527mb

The next screen allows you to select which part of the system you would like to test based upon the problem you are troubleshooting. The Gun Positioning System will not be available until the hydraulics segment has been successfully tested (the PDI should not be reset). To test the entire system, all four segments should be tested in the order they appear on the screen. As each segment passes its test, the next segment should be selected from this screen without resetting the system. If any of the segmented tests fail, the fault should be corrected, the PDFCS should be reset and the testing should begin again with the first test. Continuing testing without resetting the system can result in false failures.

To perform any of the segment tests select “YES” when that segment appears behind “CHOOSE OPTION”.

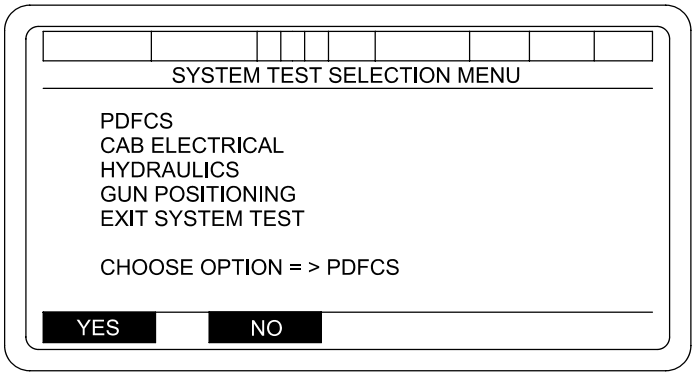


06pc377mc

# O-9 PDFCS AND PDI FAULT DETECTION - CONTINUED

## O-9.3 PDI System Test - Continued

The following screen will be displayed.

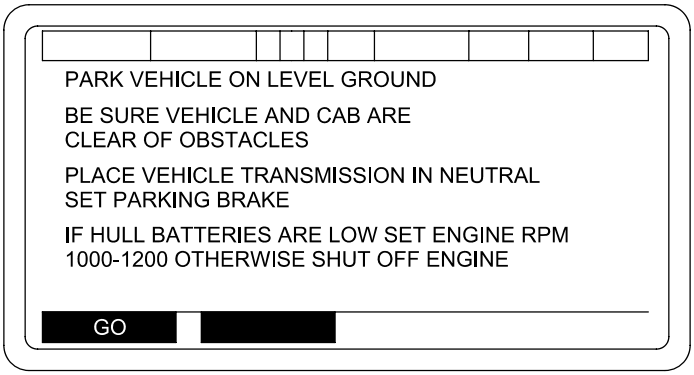


06pc378ma

When you have completed the required actions, press GO softkey and testing will continue.

During the next few screens, you will be given the CANCEL softkey option. CANCEL is there in case you selected the DIAGNOSTIC TEST function (from the menu) by mistake or in case you changed your mind. When you press CANCEL, the system will display the PDI SYSTEM TEST MENU again.

Throughout diagnostic testing, you will be given instructions. When you press GO, you are telling the system that you have done the task it asked for. It is important that you complete the task before pressing GO because many of the decisions that the system makes are based on the actions that you made. A typical instruction is shown below:

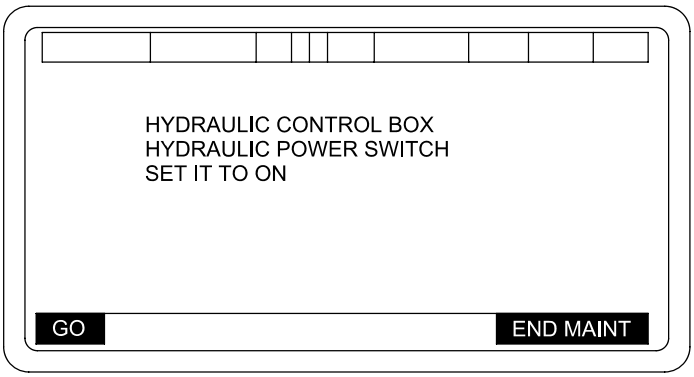


06pc411ma

When you are instructed to perform an action such as the screen below, the PDI measures the voltage of the switch.

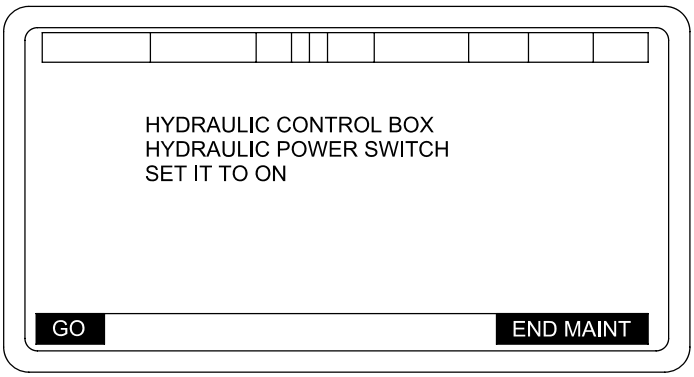


06pc411ma

# O-9 PDFCS AND PDI FAULT DETECTION - CONTINUED

## O-9.3 PDI System Test - Continued

If the result is not correct, then you are asked if you performed the action correctly, as shown in the screen below.

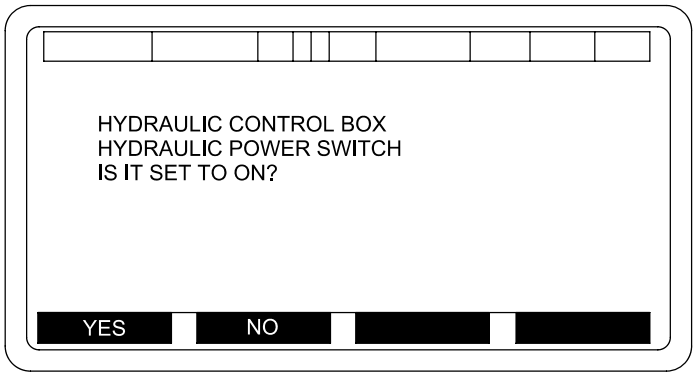


06pc409ma

If you answer “YES”, a fault will be detected by the PDI. If you answer “NO”, you will be given another chance to perform the action correctly. Then, if the action is not performed correctly, a fault will be detected by the PDI.

Most of the displays in the main section of the DIAGNOSTIC TEST will include an END MAINT softkey at the bottom of the display. When this is present, you have the option of stopping the test at that point. If you press END MAINT, testing will immediately stop and you will see the Fault Summary display with all of the test results up to where you stopped. This feature is provided to allow you to return to normal operations with a minimum of delay if necessary. REMEMBER - When you press END MAINT, the system can only report the results of the test up to where you stopped. There may be further faults not detected.

During diagnostic testing, you will also be asked to answer questions. A typical question is shown below:

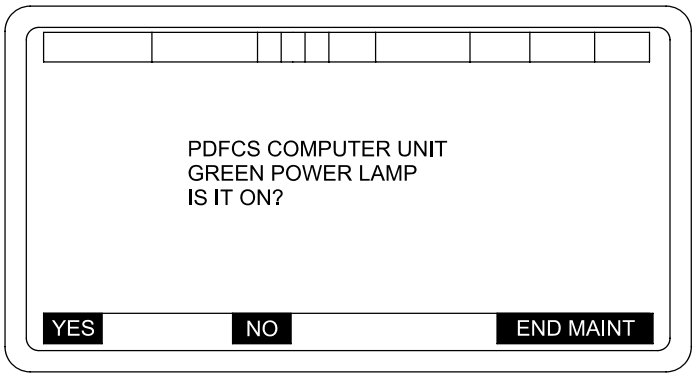


06pc407me

Questions will always be asked so that a YES or NO answer is possible by pressing the YES or NO softkeys. The system is using your ability to see, feel and hear to get the information it needs. It uses your answers to make decisions about functions that cannot be measured directly by the PDI.

# O-9 PDFCS AND PDI FAULT DETECTION - CONTINUED

## O-9.3 PDI System Test - Continued

Several times during diagnostic testing, you will see messages that start with the words “TEST IN PROGRESS” like the following screen:

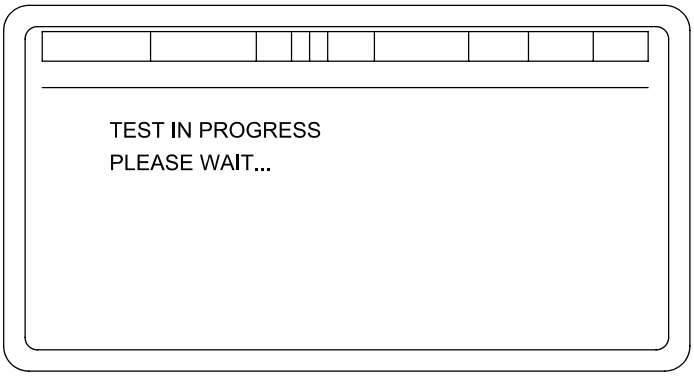


06pc548mb

These screens have no labels for the softkeys at the bottom of the screen and require no response. They are intended to let you know that the system has recognized your last response and is busy with a long test operation. When it is ready to continue, the display will automatically change to a question or instruction message.

If you are troubleshooting a hydraulics or weapon positioning problem or performing a full system checkout, you should press the YES softkey. The system will then begin a new sequence of instructions and questions. Most faults will be isolated as far as possible by the PDI during the normal sequence of DIAGNOSTIC TEST. Usually, the test sequence will run to completion and display the Fault Summary screen. However, some faults can be isolated further. This requires extra testing which can involve disconnecting cables and opening the hydraulic compartment. When one of these faults is detected, the system will remember it until it has finished all of the fault detection tests. It will then display a special menu screen like the following:

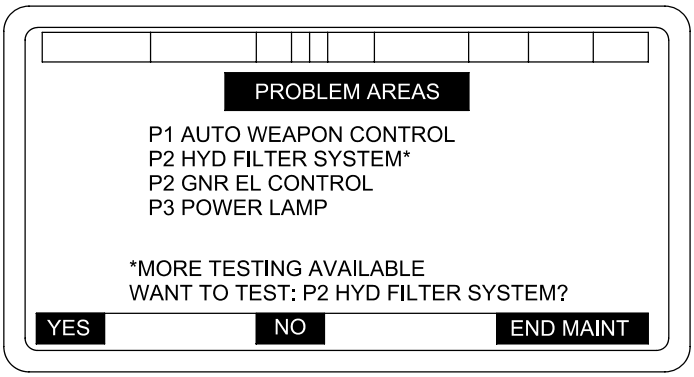


06pc531ma

Each of the problem areas that requires extra testing will be displayed with an asterisk (*). The question line at the bottom will have the same name of the first extra test problem area. You can choose to continue testing this problem area by pressing YES. If you press NO, the name of the next extra test problem area will appear. As long as you continue to press NO, the names of the * problem areas will appear in the question, one at a time. If you decide not to do any of the extra testing, press END MAINT and the system will immediately display the Fault Summary.

# O-9 PDFCS AND PDI FAULT DETECTION - CONTINUED

## O-9.3 PDI System Test - Continued

If you press the YES softkey for one of the problem areas, testing will continue with instructions and questions until the fault has been isolated as far as possible by the PDI. When the extra testing is complete, you will see a screen like the following:

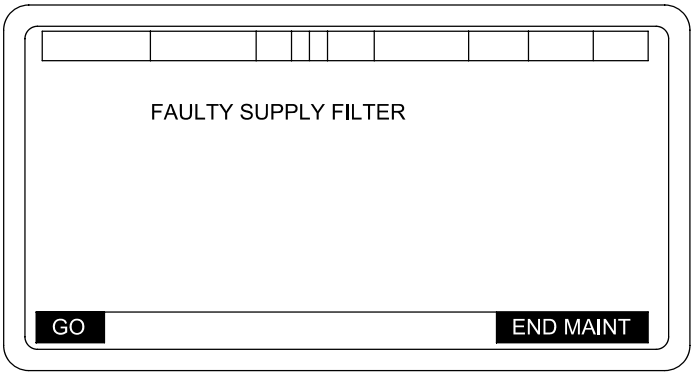


06pc532ma

This screen may show one faulty LRU or a short list of possible faulty LRUs that must be isolated further by manual troubleshooting procedures. It tells you that the PDI has done all of the testing it can. When you press GO, the Fault Summary screens will begin.

The first screen of the Fault Summary sequence will be definition of the Fault Priority Codes assigned to each fault message.

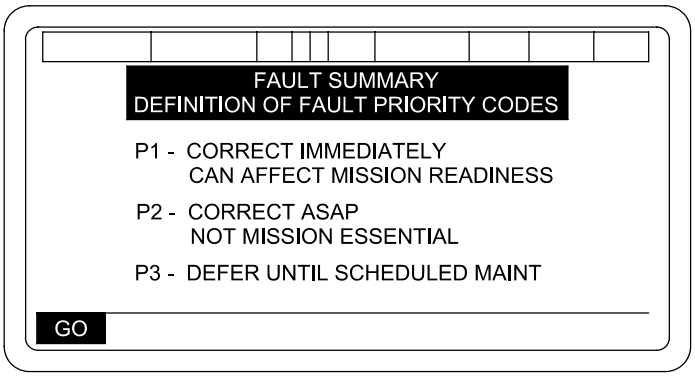


06pc533ma

P1 – These faults require immediate attention. You have lost or may soon lose a major system function that may affect your mission capabilities.

P2 – These faults do not immediately affect your mission readiness but should be corrected as soon as possible.

P3 – These faults can be deferred until a scheduled maintenance period.

# O-9 PDFCS AND PDI FAULT DETECTION - CONTINUED

## O-9.3 PDI System Test - Continued

The fault definition screen is followed by a Fault Summary list like the one shown on the next screen.

**NOTE**

All of the information in the Fault Summary screens should be reported to Unit Maintenance. It is a good idea to copy the list of problems and possible faults before pressing GO. If you forget or don't have time to copy all the information now, it can be redisplayed by selecting the Previous Fault Summary option in the PDI SYSTEM TEST MENU screen the next time it is displayed, even if power has been removed.

Press the GO softkey to continue.

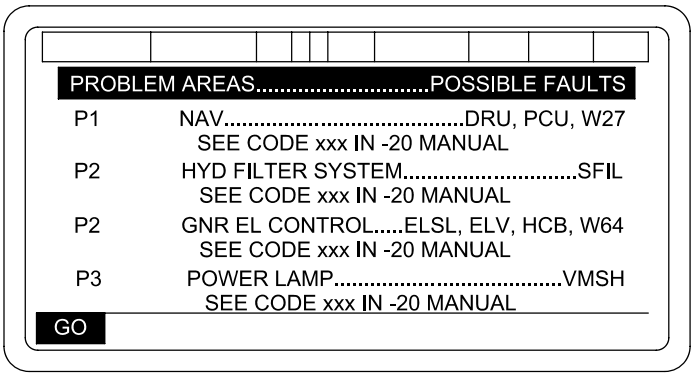


06pc534ma

The Fault Summary screens are a list of all of the problems found during screen DIAGNOSTIC TEST. When no problems have been detected, this will simply say "NO FAULTS FOUND" and the Definition of Fault Priority Codes screen will not be shown. However, when problems have been detected, a list like the one above will appear.

When the Fault Summary displays problem areas, it also displays a list of possible faulty LRUs for each problem area and a -20 manual code number. When only one LRU is listed for a problem area, DIAGNOSTIC TEST has determined that the LRU is definitely faulty and must be replaced. When more than one LRU (separated by commas) is listed as a possible fault for a problem area, further isolation by Unit Maintenance is required to determine which one of the LRUs listed is faulty.

The code number (xxx) listed in the "SEE CODE XXX IN -20 MANUAL" message is a reference to an index in the -20 manual which lists the page where the correct manual troubleshooting procedure can be found.

# O-9 PDFCS AND PDI FAULT DETECTION - CONTINUED

## O-9.3 PDI System Test - Continued

The Fault Summary list can take up to three screens. When you have finished viewing or copying the information on each Fault Summary screen, press GO to continue. If more faults were detected, the next Fault Summary screen will be displayed. Some faults may not appear due to limited space on the screens. After corrective actions have been accomplished, the test should be re-run to ensure no additional faults are detected. If Reconfiguration Advice is available for the detected faults, you will be asked the following question:

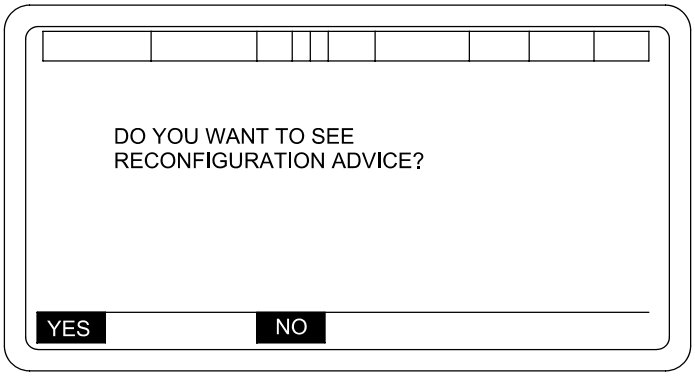


06pc535ma

This screen offers you the chance to get further information on what backup modes of operation are available for subsystems that are not operational. If you press YES, a screen like the following will appear:

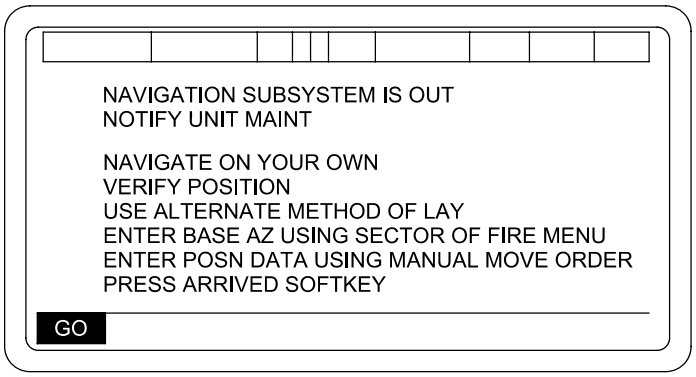


06pc536ma

# O-9 PDFCS AND PDI FAULT DETECTION - CONTINUED

## O-9.3 PDI System Test - Continued

Reconfiguration Advice may take more than one screen depending on which (and how many) subsystems are not operational. After you have read each screen, press the GO softkey to continue.

After all Reconfiguration Advice messages have been read, you will be given two screens of instructions that will return the vehicle to a given state. At this point, testing is complete. When you press the final GO, the screen will display the PDIU SYSTEM TEST MENU again.

General Notes About DIAGNOSTIC TEST

The sequence of messages and displays that you see during DIAGNOSTIC TEST will vary depending on the number of faults present in the vehicle. The system will choose its own path through the tests and guide you with instructions. Don't be concerned if you see messages and questions you haven't seen before. The system is simply troubleshooting a fault you haven't had before.

b. PREVIOUS FAULT SUMMARY

To view the PREVIOUS FAULT SUMMARY, press the B softkey.

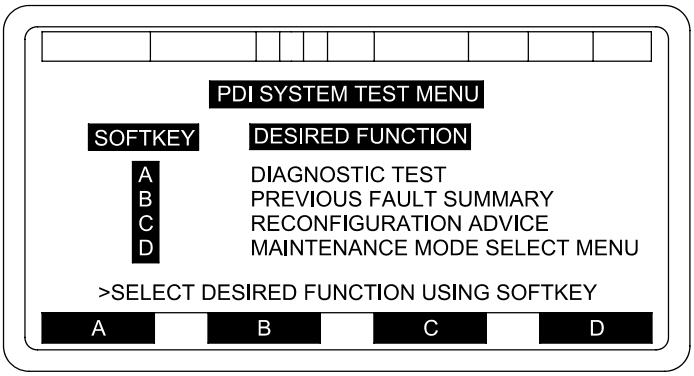


06pc527mb

The PREVIOUS FAULT SUMMARY is a list of all the problems found during the last DIAGNOSTIC TEST performed. If no problems were detected, the following message will be displayed:

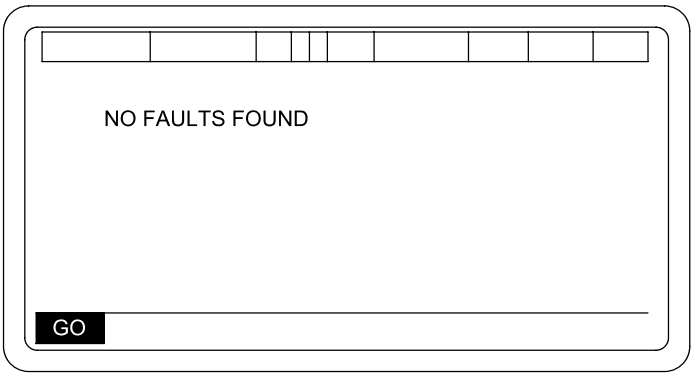


06pc537ma

# O-9 PDFCS AND PDI FAULT DETECTION - CONTINUED

## O-9.3 PDI System Test - Continued

If the last DIAGNOSTIC TEST was aborted before completion, you will also see the following message:

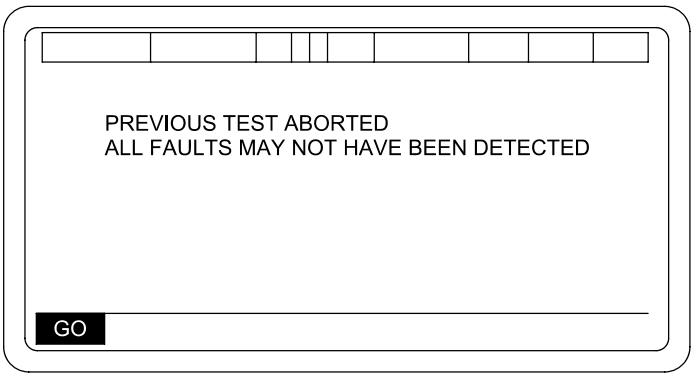


06pc538ma

When all screens in the Previous Fault Summary display sequence have been viewed, the PDIU SYSTEM TEST MENU will automatically be displayed again.

c. RECONFIGURATION ADVICE

To view Background Monitoring Mode RECONFIGURATION ADVICE, press the C softkey.

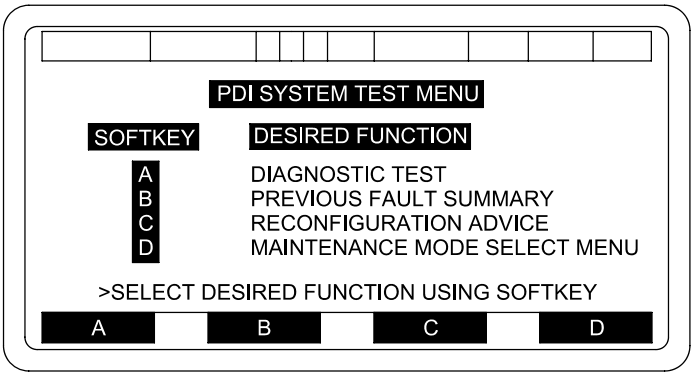


06pc527mb

A screen like the following will be displayed:

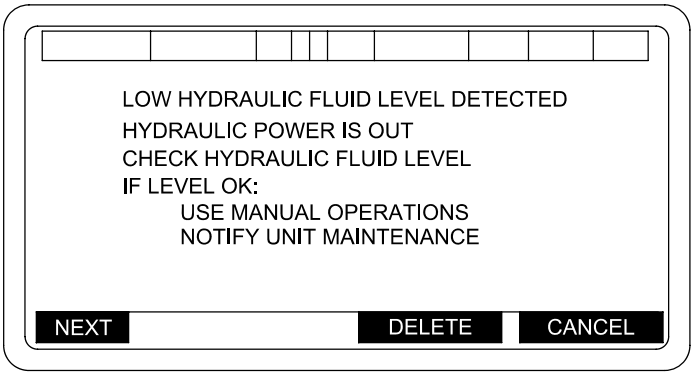


06pc539ma

# O-9 PDFCS AND PDI FAULT DETECTION - CONTINUED

## O-9.3 PDI System Test - Continued

RECONFIGURATION ADVICE offers you the opportunity to get more information on what Backup Modes of Operation are available for subsystems that are not operational. This information is displayed for each warning message sent to the PDCU during Normal Operations. RECONFIGURATION ADVICE can take several screens to display as each warning message/advisory information is displayed on a separate screen. You can cycle through and delete the messages as desired.

If you press NEXT, the next warning message and its advisory information will be displayed. If you press DELETE, the warning message and its advisory information displayed will be deleted and the next warning message will appear.

Throughout RECONFIGURATION ADVICE, the CANCEL softkey is available to you. If you press CANCEL, you will exit from RECONFIGURATION ADVICE and the PDI SYSTEM TEST MENU will be displayed again.

After all messages have been viewed, the following display will appear:

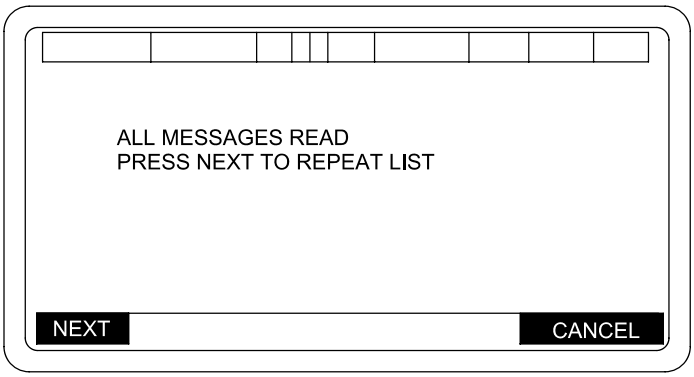


06pc540ma

You can press NEXT to cycle through all the messages which were not deleted. Or press CANCEL to exit.

When the last message is displayed and there are no more messages to view, a display like the following will appear:

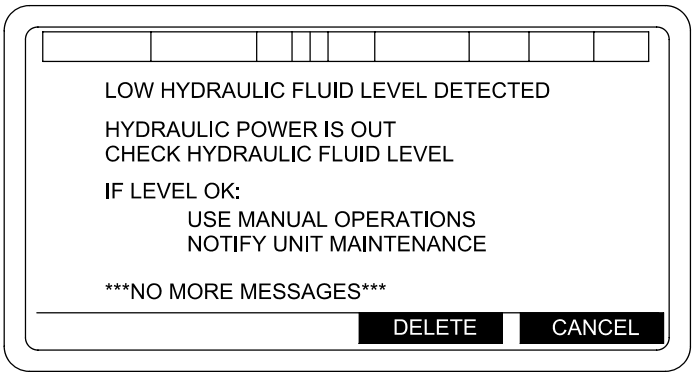


06pc541ma

If you press DELETE, the warning message and its advisory information will be deleted and the PDI SYSTEM TEST MENU will be displayed again.

# O-9 PDFCS AND PDI FAULT DETECTION - CONTINUED

## O-9.3 PDI System Test - Continued

d. MAINTENANCE MODE SELECT MENU

To exit from PDI SYSTEM TEST, press the D softkey.

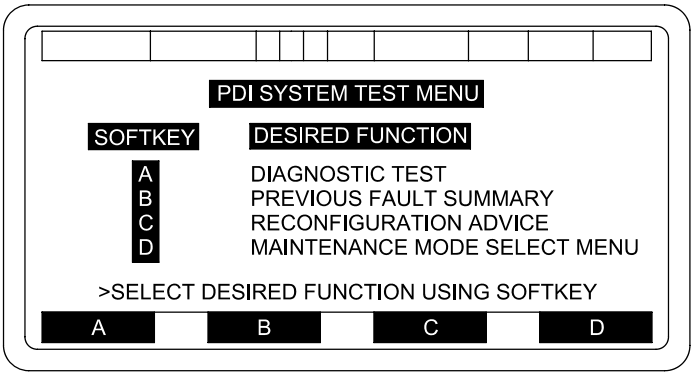


06pc527mb

Pressing D will terminate PDI SYSTEM TEST and the MAINTENANCE MODE SELECT menu screen will appear. The PDI will automatically enter into its Background Monitoring Mode.

e. PDI SYSTEM TEST MENU VARIATIONS

The following screens show all of the different menus that can be displayed when entering the PDI SYSTEM TEST. As mentioned above, all options are not always available. An option will not be displayed if its function cannot be performed.

In the following screen, all options are available to the user.

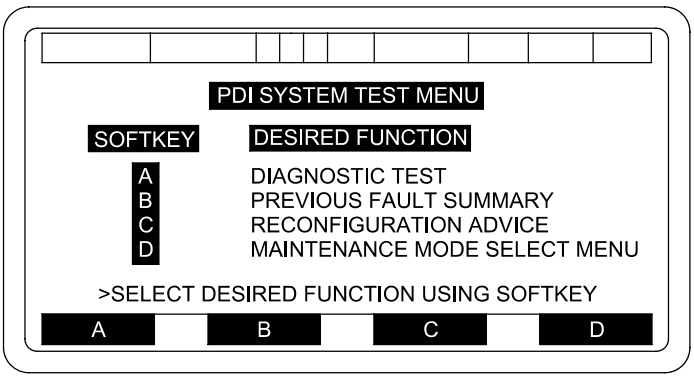


06pc527mb

# O-9 PDFCS AND PDI FAULT DETECTION - CONTINUED

## O-9.3 PDI System Test - Continued

The RECONFIGURATION ADVICE option is missing from the following menu screen. RECONFIGURATION ADVICE will only be available for warning messages sent to the PDCU during Normal Operations and for certain faults detected by the PDFCS.

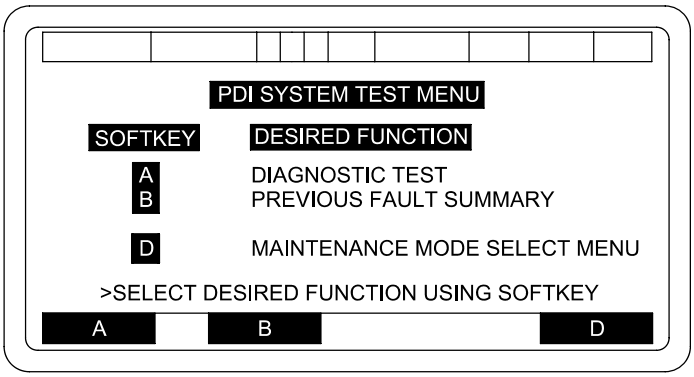


06pc542mb

The PREVIOUS FAULT SUMMARY option is missing from the following menu screen. A PREVIOUS FAULT SUMMARY will only be available if the last DIAGNOSTIC TEST performed was aborted while in progress and faults had been detected or if the last DIAGNOSTIC TEST was completed.

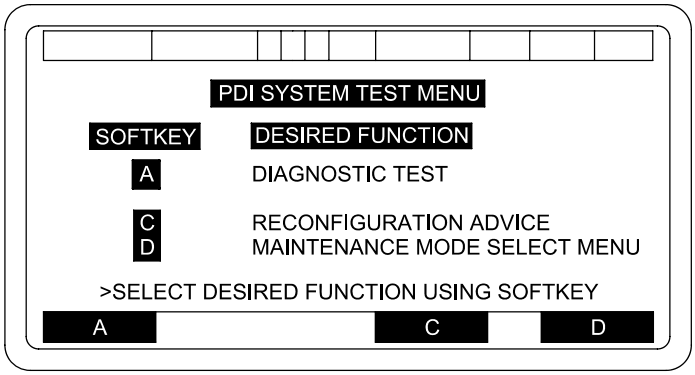


06pc543mb

# O-9 PDFCS AND PDI FAULT DETECTION - CONTINUED

## O-9.3 PDI System Test - Continued

Both the PREVIOUS FAULT SUMMARY and RECONFIGURATION ADVICE options are missing from the following menu screen. Neither of these options can be performed. DIAGNOSTIC TEST and MAINTENANCE MODE SELECT MENU options will always be available.

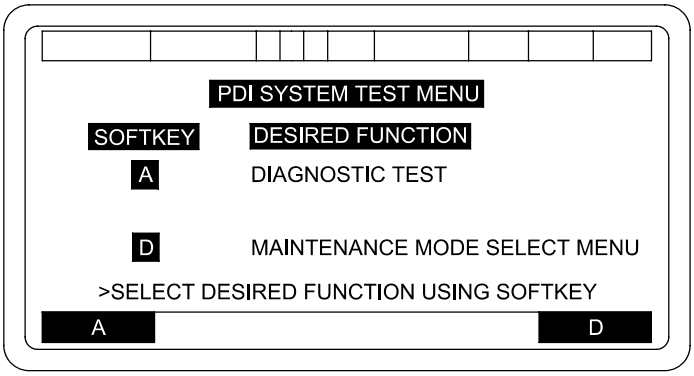


06pc546mb

DIAGNOSTIC TEST is the way you perform all diagnostic testing.

MAINTENANCE MODE SELECT MENU is the way you end PDI system testing and return to PDFCS operations.

# O-9 PDFCS AND PDI FAULT DETECTION - CONTINUED

## O-9.4 Vehicle Motion Sensor Test.

This test is designed to check Vehicle Positioning System. The VMS provides signals to the PDFCS that aid in the location and positioning of vehicle (coordinates).

This test SHOULD be performed under standard vehicle setup conditions (para O-9.3). This test is used whenever directed by troubleshooting procedures, or when NAV DEGRADED is displayed on the PDU and you get ZUPT requests after about 4 minutes of travel.

If test results indicate that VMS is not properly functioning, notify unit maintenance personnel for corrective action.

a. Select VMS TEST from MAINTENANCE MODE SELECT menu.

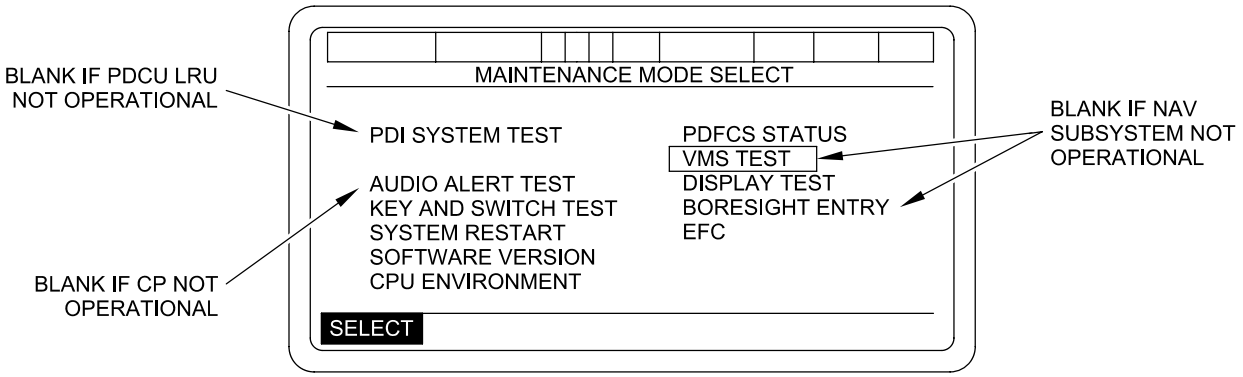


06pc134tf

# O-9 PDFCS AND PDI FAULT DETECTION - CONTINUED

## O-9.4 Vehicle Motion Sensor Test - Continued

This test is run automatically.

b. Depressing softkey under CANCEL will end test and take you back to MAINTENANCE MODE SELECT menu.

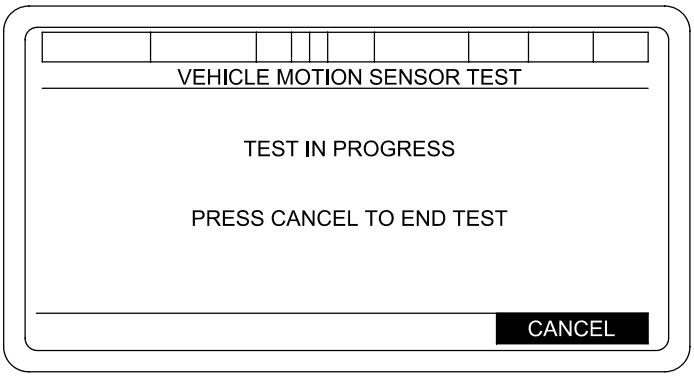


06pc548ma

If test results indicate a fault, determine if this degraded mode is acceptable. If not, notify unit maintenance.

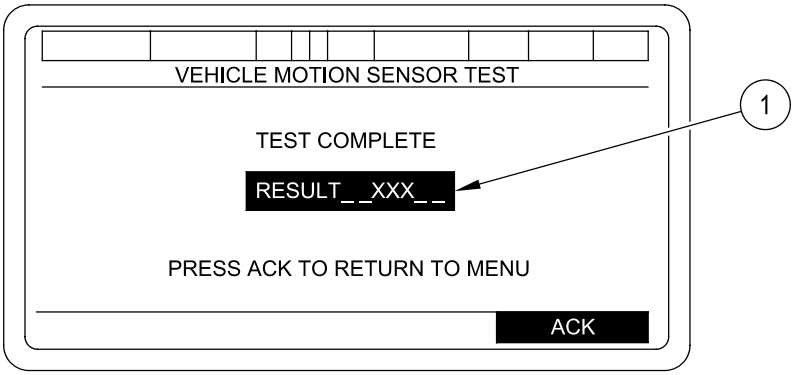


06pc549ma

(1) Test results can show any of the following:

RESULT -- VMS GOOD

RESULT -- VMS BAD

RESULT -- CAB SIDE VMS MODEM BAD

RESULT -- CHASSIS SIDE VMS MODEM BAD

c. When test is completed, depress softkey under ACK. This will take you back to MAINTENANCE MODE SELECT menu.

# O-9 PDFCS AND PDI FAULT DETECTION - CONTINUED

## O-9.5 Audio Alert Test.

This test checks the PDFCS communications system fire mission alert notification. During this test, all crewmember's intercom control boxes should emit a repeating tone for 5 seconds. Checks of CVC helmets and intercoms should be performed.

This test should be performed under the standard vehicle setup conditions.

This test is used when directed by troubleshooting procedures, or if testing intercom/CVC is desirable.

a. Select AUDIO ALERT TEST from MAINTENANCE MODE SELECT menu. Press SELECT KEY. AUDIO ALERT TEST is displayed.

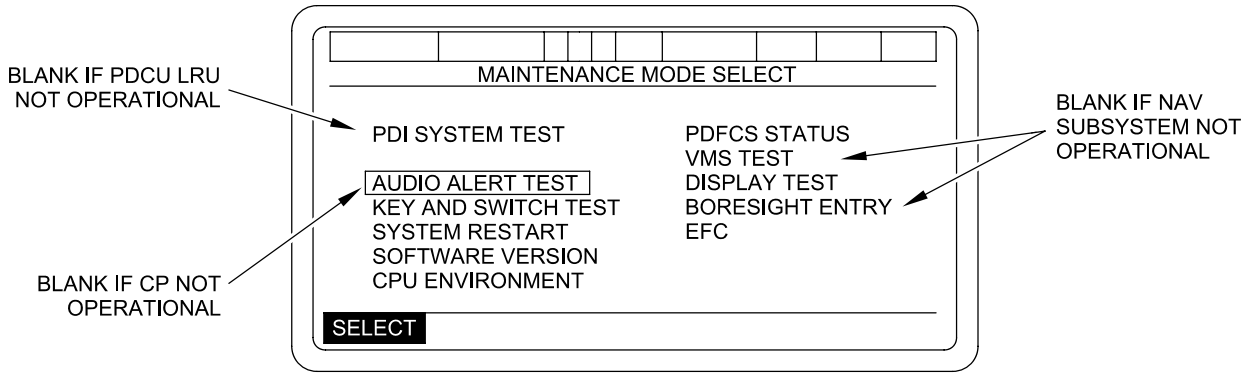


06pc135tc

b. Depressing softkey under CANCEL will take you back to MAINTENANCE MODE SELECT menu.

c. Depressing softkey under CONTINUE will start your AUDIO ALERT TEST.

d. When your AUDIO ALERT TEST is completed, you may depress softkey under CONTINUE to repeat test.

e. When test is completed, depress softkey under CANCEL to return to MAINTENANCE MODE SELECT menu.

f. If there is fault with your intercom/PDFCS, notify unit maintenance.

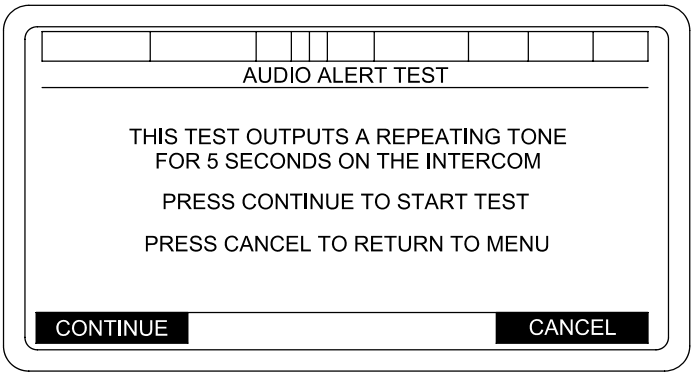


06pc550ma

# O-9 PDFCS AND PDI FAULT DETECTION - CONTINUED

## O-9.6 Display Test.

This test checks the uniform color contrast of the display. Information appearing on the screen may become too light to read.

This test should be performed under standard vehicle setup condition (para 3-5A.3).

This test will be used when directed by troubleshooting procedures, or if testing of PDU screen is desirable.

a. Select DISPLAY TEST from MAINTENANCE MODE SELECT menu. Press SELECT key.

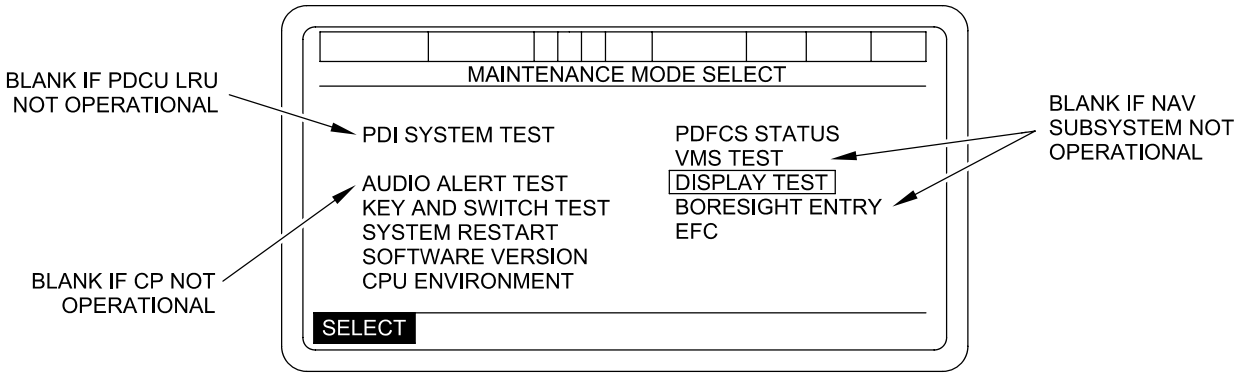


06pc136te

b. Your display will become highlighted for 2 seconds. After 2 seconds, the display will return to normal. You may reselect DISPLAY TEST if required.

c. If there are some spots on your display that did not light up, determine if this degraded mode is acceptable. If this is not acceptable, notify unit maintenance.

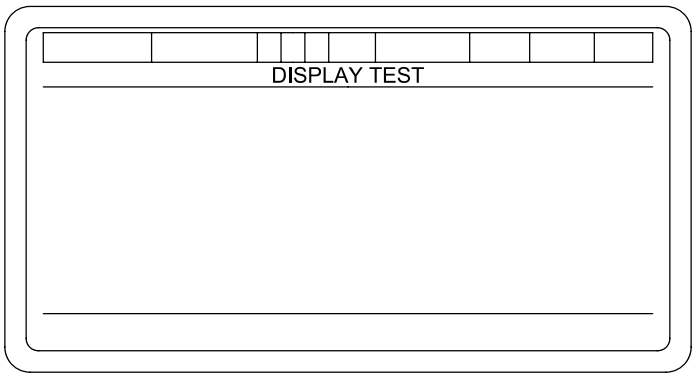


06pc136tc

# O-9 PDFCS AND PDI FAULT DETECTION - CONTINUED

## O-9.7 Key and Switch Test.

### NOTE

PDFCS must be powered up at least 5 minutes prior to performing this test.

This test checks the response of each key and toggle switch on the display. The key marked T is for the embedded trainer switch and the key marked S is the GUN SERVO switch. Ensure that NOTES are observed when conducting this test.

This test should be performed under the standard vehicle setup condition (para O-9.3).

This test will be used when directed by troubleshooting procedures, or if malfunctions of PDFCS keypad and switches are apparent.

Select KEY AND SWITCH TEST from MAINTENANCE MODE SELECT menu. Press SELECT key.

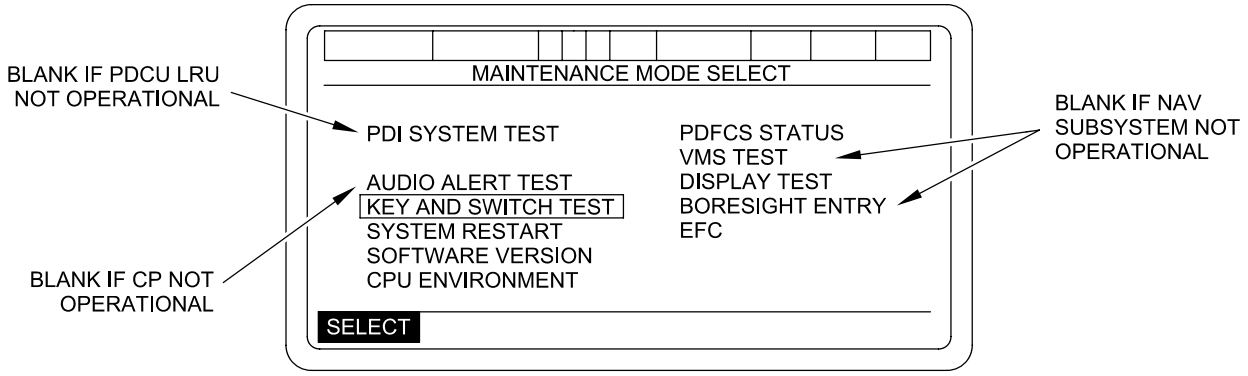


06pc137tc

### NOTE

- Test ends when F1 (softkey) is depressed. Make sure you depress F1 softkey last while performing this test.
- Do not place PDFCS POWER switch to OFF during this test.

a. Depress each key in turn (including arrow keys, softkeys, LOAD, LAY, and STOW keys) and place both switches shown to ON/OFF for testing. As each key is depressed, it will be highlighted.

b. As each switch/toggle is moved, it will move up or down on your display.

c. If fault is indicated with your PDFCS keypad, switches, softkeys, arrow keys, LOAD, LAY, or STOW keys, notify unit maintenance.

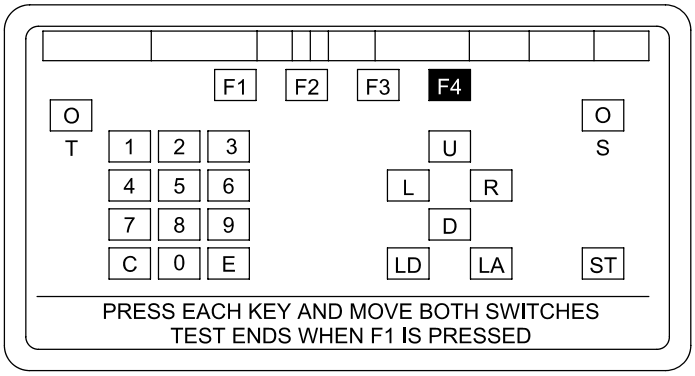


06pc551ma

# O-9 PDFCS AND PDI FAULT DETECTION - CONTINUED

## O-9.8 Boresight Angle Entry.

This capability is designed for use by unit maintenance personnel only. Operators must not use this selection.

**WARNING**

This selection will be used by unit maintenance personnel to input correction to NAV SUBSYSTEM boresight. Entry of improper data into boresight angle entry menu can cause gun to be laid incorrectly. This could result in injury or death to personnel down range.

**NOTE**

If you accidently enter this mode, you must exit immediately by pressing the CANCEL key.

## O-9.9 Equivalent Full Charge (EFC).

EFC data is maintained by the PDFCS. It consists of a cumulative set which contains the total number of rounds fired by the gun using legal charge and the accumulated EFC based on the total number of rounds fired. The PDFCS saves the data in the non-volatile memory during normal PDFCS power down sequencing.

The calculation of EFC is done automatically for POC/FDC directed fire missions when the operator presses the softkey under the VERIFIED prompt on the VERIFY EXPENDED AMMO menu. However, should the operator not be able to VERIFY that the specified ammunition has been fired, or fire missions have been fired with data supplied by voice radios, or direct fire missions have occurred, then the operator will be required to update the PDFCS Ammunition Inventory and the EFC.

To update the EFC, access the SETUP AND INFORMATION menu, place cursor on MAINTENANCE, and press softkey under SELECT prompt. The MAINTENANCE MODE SELECT menu will appear. Place cursor on EFC and press softkey under SELECT prompt, the EQUIVALENT FULL CHARGE menu will be displayed.

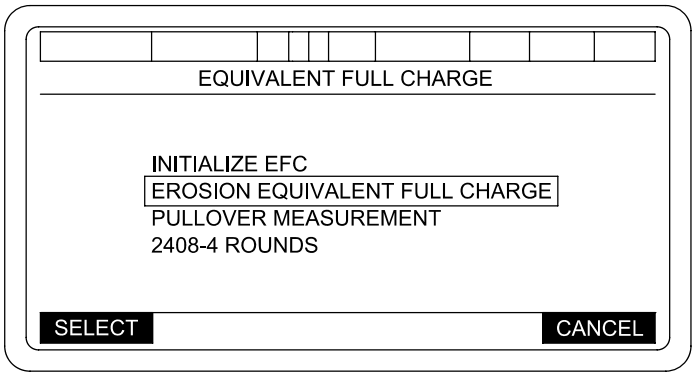


06pc281t

Each of the four functions will not be described separately.

# \O-9 PDFCS AND PDI FAULT DETECTION - CONTINUED

## O-9.9 Equivalent Full Charge (EFC) - Continued

O-9.9.1 Initialize EFC.

This function is used to Initialize EFC data in the event a new cannon tube is placed on the vehicle.

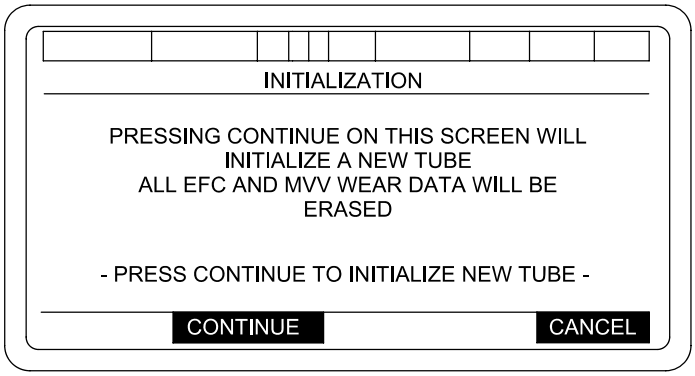


06pc281ta

If you press CONTINUE, the PDFCS shall display the operator prompt “ARE YOU SURE?” “YES” “NO”.

If YES is pressed, the following actions occur automatically and the display will return to the EQUIVALENT FULL CHARGE menu:

Pullover Gauge Measurement is reset to 6.100 (This also causes EFC Erosion to reset to Zero)
MVV Wear Database is reset to Zero
2408-4 Rounds Information is reset to Zero

If NO is pressed, the display will return to the EQUIVALENT FULL CHARGE menu.

O-9.9.2 Erosion Equivalent Full Charge.

This function is used to view the Current EFC Erosion Count of the weapon.

**NOTE**

The maximum value of EFC displayed shall not exceed 2700.

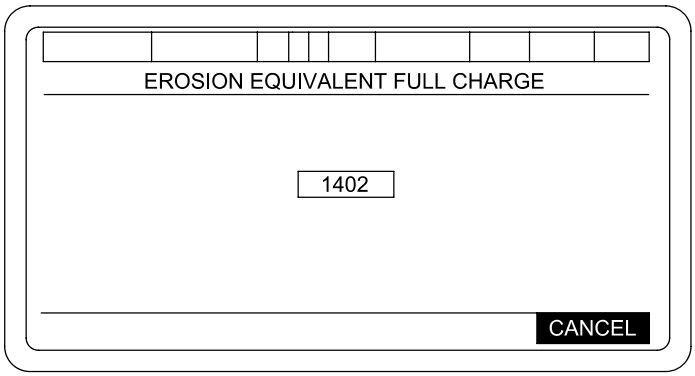


06pc282t

When the CANCEL softkey is pressed, the display shall return to the EQUIVALENT FULL CHARGE menu.

# O-9 PDFCS AND PDI FAULT DETECTION - CONTINUED

## O-9.9 Equivalent Full Charge (EFC) - Continued

O-9.9.3 Pullover Measurement.

This function is used to view the Current Pullover Gauge Measurement or input a new Pullover Gauge Measurement.

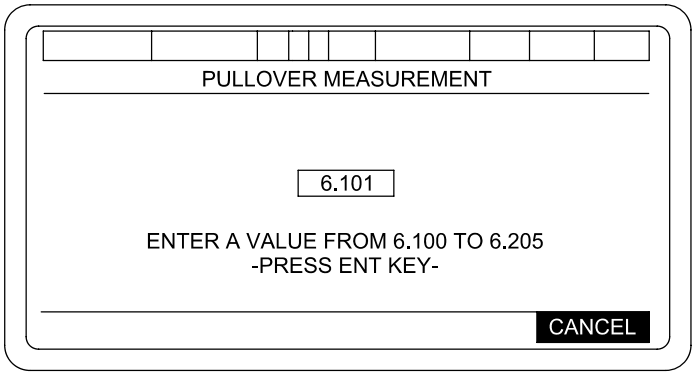


06pc282ta

The operator shall only be allowed to enter a Pullover Measurement of 6.100 to 6.205. If the operator enters a value less than 6.100 or greater than 6.205, the PDFCS shall display the operator warning “VALUE TOO BIG” “ACK” or “VALUE TOO SMALL” “ACK”. When the ACK softkey is pressed, the display shall return to the previously stored value.

When the ENT key is pressed, the PDFCS shall display the operator prompt “ARE YOU SURE?” “YES” “NO”.

If “YES” is pressed, then the PDFCS shall convert the Pullover Gauge Measurement into the equivalent EFC Erosion count and update the EFC Erosion count in the MVV Wear Database. This display will then return to the EQUIVALENT FULL CHARGE menu.

If NO is pressed, the screen will return to the previously stored values for reentry of data.

# O-9 PDFCS AND PDI FAULT DETECTION - CONTINUED

## O-9.9 Equivalent Full Charge (EFC) - Continued

O-9.9.4 2408-4 Rounds.

This screen allows four separate and distinct functions:

The first allows update of Total Rounds (which shall not affect EFC Erosion) to match the Manual 2408-4. The second permits entry of rounds fired during a period in which the PDFCS was inoperable. The third allows adjustment of rounds entered during Verification or "Other" missions not actually fired. The fourth function allows initialization of a new PDU. When coupled with Pullover Gauge, 2408-4 TOT RNDS PRIOR TO PULLOVER GAUGE, AND "+/- RNDS", the last known EFC Erosion can be duplicated.

**NOTE**

To maintain accuracy and consistency, the PDFCS database must be restored exactly as it was at the time the PDFCS became inoperable.

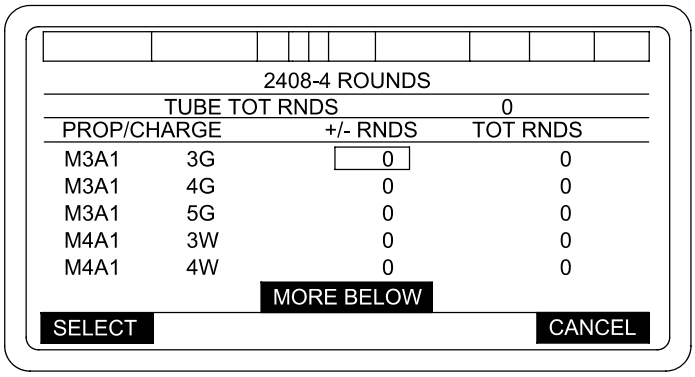


06pc283t

**NOTE**

Scrolling shall be enabled, with MORE BELOW and MORE ABOVE appearing as appropriate.

When +/- RNDS is highlighted and the SELECT softkey is pressed, the following will be displayed:

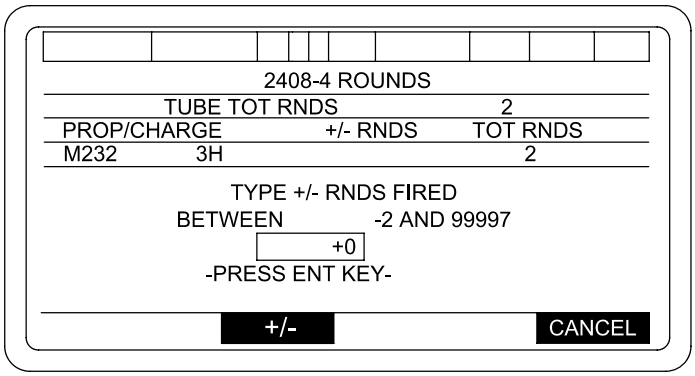


06pc283ta

# O-9 PDFCS AND PDI FAULT DETECTION - CONTINUED

## O-9.9 Equivalent Full Charge (EFC) - Continued

O-9.9.4 2408-4 Rounds - Continued

When TOT RNDS is highlighted and the SELECT softkey is pressed the following will be displayed.

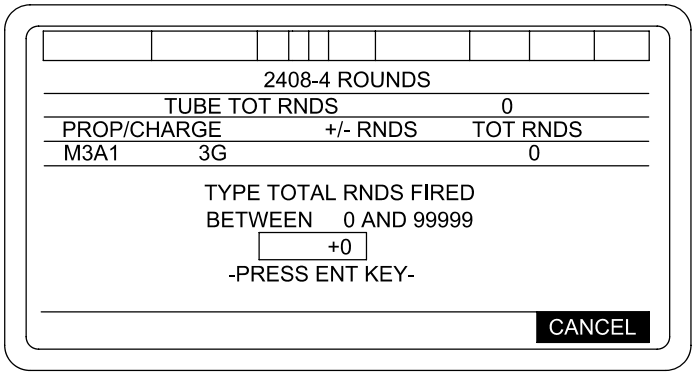


06pc284t

Input new value and press ENTER to accept value. When ENTER has been pressed the display will return to the 2408-4 ROUNDS screen.

## O-9 PDFCS AND PDI FAULT DETECTION - CONTINUED

### O-9.10 PDFCS and PDCU Abbreviations.

| ABBREVIATION | NAME |
|---|---|
| ABCS | ARMY BATTLE COMMAND SYSTEM |
| AOF or AF | AZIMUTH OF FIRE |
| ATCCS | ARMY TACTICAL COMMAND AND CONTROL SYSTEM |
| AUXA | EXTERNAL BATTERY-A |
| AUXB | EXTERNAL BATTERY-B |
| AZ | AZIMUTH |
| AZ/EL | AZIMUTH AND ELEVATION TACHOMETERS |
| AZTACH | TACHOMETER |
| BATT | BATTERY |
| BB2 | BRUSH BLOCK #2 |
| BB6 | BRUSH BLOCK #6 |
| BB7 | BRUSH BLOCK #7 |
| BC | BALLISTIC COMPUTATION |
| BCS | BATTERY COMPUTER SYSTEM |
| BDE | BRIGADE |
| BFA | BATTLEFIELD FUNCTIONAL AREAS |
| BIT | BUILT IN TEST |
| BN | BATTALION |
| BRD | BOARD |
| BPSL | BYPASS SOLENOID |
| BPV | BYPASS VALVE |
| C3 | COMMAND, CONTROL, AND COMMUNICATION |
| CBLS | CABLES |
| CDP | CONDITION DIPOLE |
| CHKFIRE | CHECK FIRE |
| CFN | COOLING FAN |
| CLCS | CLUTCH SOLENOID |
| CLV | CLUTCH VALVE |
| COMMO | COMMUNICATION |
| COS | CHIEF OF SECTION |
| COSCH | CHIEF OF SECTION CONTROL HANDLE |
| COSCH VLF | CHIEF OF SECTION CONTROL HANDLE VELOCITY FUSE |
| COTS | COMMERCIAL OFF THE SHELF |
| CP | COMMUNICATIONS PROCESSING |
| CPCI | COMPUTER PROGRAM CONFIGURATION ITEM |
| CPU | COMPUTER PROCESSING UNIT |
| CRSH | CURRENT SHUNT |
| CTRL | CONTROL |
| CTSW | COOLING TEMPERATURE SWITCH |

# O-9 PDFCS AND PDI FAULT DETECTION - CONTINUED

## O-9.10 PDFCS and PDCU Abbreviations - Continued

| ABBREVIATION | NAME |
|---|---|
| DAGR | DEFENSE ADVANCED GPS RECEIVER |
| DRU | DYNAMIC REFERENCE UNIT |
| DRUH | DYNAMIC REFERENCE UNIT HYBRID |
| EDS | ENHANCED DISPLAY SYSTEM |
| EL | ELEVATION |
| ELHP | ELEVATION HAND PUMP |
| ELSL | ELEVATION SELECT SOLENOID |
| ELSV | ELEVATION SERVO VALVE |
| ELTACH | ELEVATION TACHOMETER |
| ELTRUN | ELEVATION TRUNNION |
| ELV | ELEVATION SELECT VALVE |
| EPIAFS | ENHANCED PORTABLE INDUCTIVE ARTILLERY FUZE SETTER |
| EQ | EQUILIBRATION |
| EQA | EQUILIBRATION ASSEMBLY |
| EQACC | EQUILIBRATION ACCUMULATOR |
| EQHP | EQUILIBRATOR HANDPUMP |
| EQMANIFOLD | EQUILIBRATION MANIFOLD |
| EQ CHARGE VALVE | EQUILIBRATOR CHARGE VALVE |
| FC | FIRE CONTROL |
| FIL | FILTER |
| FILA | FILTER ASSEMBLY |
| FIREMSN | FIRE MISSION |
| FLOM | FLOWMETER |
| FLU | FLUID |
| FLUSN | FLUID LEVEL SENSOR |
| GB | GIGABYTES |
| GCH | GUNNER'S CONTROL HANDLE |
| GNR | GUNNER |
| GPS | GLOBAL POSITIONING SYSTEM |
| HCB | HYDRAULIC CONTROL BOX |
| HPUMP | HANDPUMP |
| HYD | HYDRAULIC |
| HYM | HYDRAULIC PUMP ELECTRIC MOTOR |
| HYP | HYDRAULIC PUMP |
| HYPR | HYDRAULIC POWER RELAY |
| IFS | INDUCTIVE FUZE SETTER |
| INP | INPUT |
| KU | KEYBOARD UNIT |

# O-9 PDFCS AND PDI FAULT DETECTION - CONTINUED

## O-9.10 PDFCS and PDCU Abbreviations - Continued

| ABBREVIATION | NAME |
|---|---|
| LAN | LOCAL AREA NETWORK |
| MB | MEGABYTES |
| MO | MOVE ORDER |
| MSL | MODE SELECT SOLENOID |
| MSV | MODE SELECT VALVE |
| MVS | MUZZLE VELOCITY SENSOR |
| MVV | MUZZLE VELOCITY VARIANCE |
| NA | NAV ASSIST |
| NAV | NAVIGATION |
| NRZ | NON-RETURN TO ZERO |
| NVM | NON-VOLATILE MEMORY |
| OLSN | OVERLOAD SENSOR |
| PCU/PCU-2 | POWER CONDITIONER UNIT-2 |
| PDCU | PROGNOSTIC DIAGNOSTIC INTERFACE UNIT |
| PDFCS | PALADIN DIGITAL FIRE CONTROL SYSTEM |
| PDI | PROGNOSTIC/DIAGNOSTIC INTERFACE |
| PDU | PALADIN DISPLAY UNIT |
| PIK | PLATFORM INTEGRATION KIT |
| PLGR | PRECISION LIGHTWEIGHT GPS RECEIVER |
| PRESS | PRESSURE |
| PSIAD | PALADIN SERIAL INTERFACE ADAPTER DEVICE |
| PWR | POWER |
| PXDCR | PRESSURE TRANSDUCER |
| RAM | RANDOM ACCESS MEMORY |
| REFIL | RETURN FILTER |
| RHDDC | REMOVABLE HARD DISK DRIVE CARTRIDGE |
| RR | RADIO RACK |
| SA | SITUATIONAL AWARENESS |
| SFIL | SUPPLY FILTER |
| SH | SHUNT |
| SINCGARS | SINGLE CHANNEL GROUND & AIRBORNE RADIO SUBSYSTEM |
| SL | SOLENOID |
| SN | SENSOR |
| SR | SLIP RING |
| SV | SERVO |
| SW | SWITCH |
| SYS | SYSTEM |
| TEMP | TEMPERATURE |
| TOC | TACTICAL OPERATION CENTER |
| TOT | TIME ON TARGET |
| TRAV | TRAVERSE |
| TRAV GEAR | TRAVERSING GEAR |

# O-9 PDFCS AND PDI FAULT DETECTION - CONTINUED

## O-9.10 PDFCS and PDCU Abbreviations - Continued

| ABBREVIATION | NAME |
|---|---|
| TRDM | TRAVERSE DRIVE MECHANISM |
| TRLSL | TRAVERSE LIMIT SOLENOID |
| TRLSW | TRAVERSE LIMIT SWITCH |
| TRLV | TRAVERSE LIMIT VALVE |
| TRSL | TRAVERSE SELECT SOLENOID |
| TRSV | TRAVERSE SERVO VALVE |
| TRV | TRAVERSE SELECT VALVE |
| TSN | TEMPERATURE SENSOR |
| TTCBL | TUBE TEMPERATURE SENSOR GFE CABLE |
| TTTSN | TUBE TEMPERATURE SENSOR |
| TXDCR | TEMPERATURE TRANSDUCER |
| USRDEF | USER DEFINED |
| VMS | VEHICLE MOTION SENSOR |
| VMSC | VEHICLE MOTION SENSOR MODEM-CAB |
| VMSH | VEHICLE MOTION SENSOR MODEM-HULL |
| VLF | VELOCITY FUSES |
| WC | WEAPONS CONTROLLER |
| WPN | WEAPON |
| WTSL | WARMUP TEMPERATURE SOLENOID |
| WTSW | WARMUP TEMPERATURE SWITCH |
| WTV | WARMUP TEMPERATURE VALVE |

# O-9 PDFCS AND PDI FAULT DETECTION - CONTINUED

## O-9.11 Software Version/Configuration Display.

To view detailed software configuration information for each Computer Program Configuration Item (CPCI) move cursor to “SOFTWARE VERSION” on the MAINTENANCE MODE SELECT menu.

### NOTE

- Information displayed from the DRUH can be interpreted as version configuration data.
- When a CPCI other than the DCU is reported with an indirect configuration, then the system will run in a degraded mode and will declare the CPCI as unavailable.
- Initially, the ACQUIRED information of the display will give the boot loader, system software version and build data for each computer program configuration item that is acceptable to the system software configuration.
- If the CPCI is not acceptable, there will be an asterisk (*) to the left of the CPCI. If the asterisk is present, this will cause the system to operate in the DEGRADED mode unless the asterisk appears next to DCU, then the system will only operate in the maintenance mode.
- To check which version of software is acceptable, press softkey under EXPECTED.
- If a CPCI is blank, the version of software loaded is acceptable with any system configuration.
- If uploading of software is required, notify unit maintenance.

# O-9 PDFCS AND PDI FAULT DETECTION - CONTINUED

## O-9.11 Software Version/Configuration Display - Continued

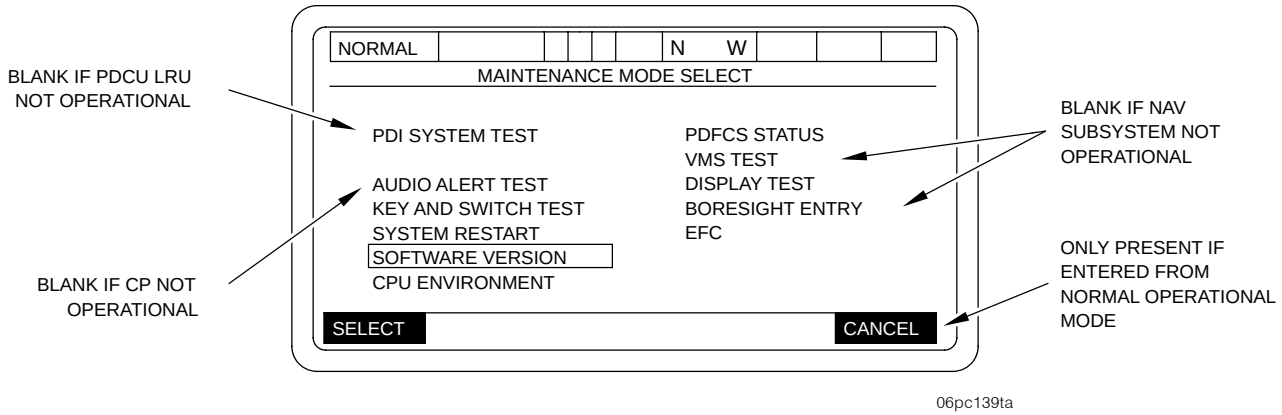


Press softkey label “SELECT” and the SOFTWARE VERSION/CONFIGURATION display as shown below will appear.

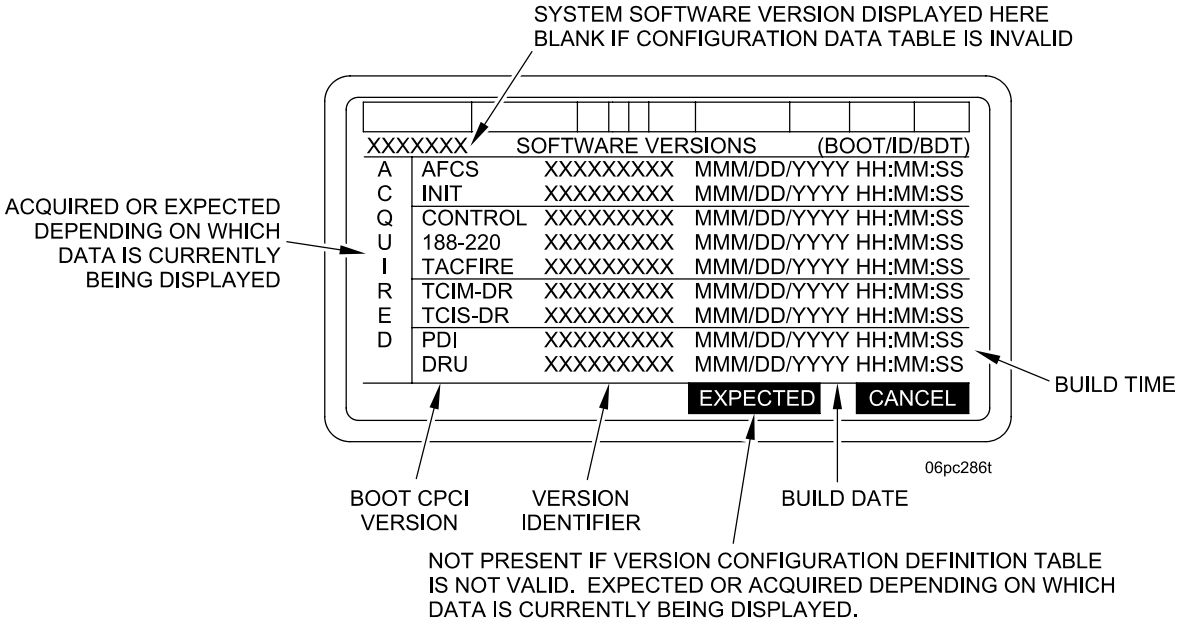


NOTE: A * IS PLACED TO THE LEFT OF ANY UNIT THAT HAS PROVIDED DATA THAT DOES NOT MATCH THE SOFTWARE CONFIGURATION TABLE ENTRY FOR THAT UNIT.

# O-9 PDFCS AND PDI FAULT DETECTION - CONTINUED

## O-9.12 CPU Environment Display.

This display allows the operator to view system-related parameters as follows:

Inputs:

1. Operating System Version (O/S)
2. BIOS Information (Vendor & Version)
3. Elapsed Time Meter (in hours)

The tactical software receives the data listed above from the PDCU and presents this information to the operator on the PDU. This information is used by maintenance personnel.

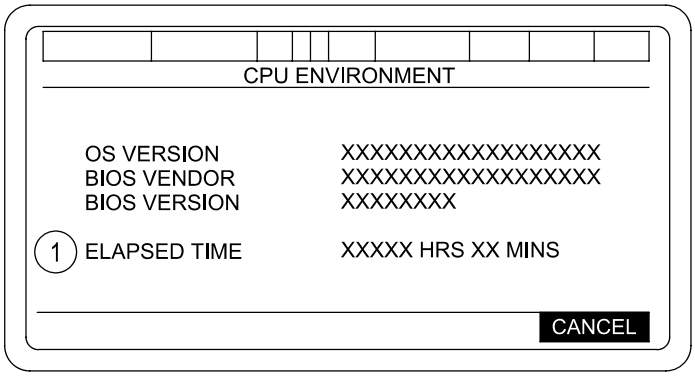


06pc428ma

1 The "ELAPSED TIME" line is not present on a PDCU system because the PDCU uses a mechanical timer to perform this function.

# O-9 PDFCS AND PDI FAULT DETECTION - CONTINUED

## O-9.13 Inductive Fuze Setter Display

The Inductive Fuze Setter (IFS) is an interface for EPIAFS components: PIK, setter, and setter cable. The IFS provides GPS data and projectile information for Excalibur munitions.

O-9.13.1 Zeroize IFS/GPS

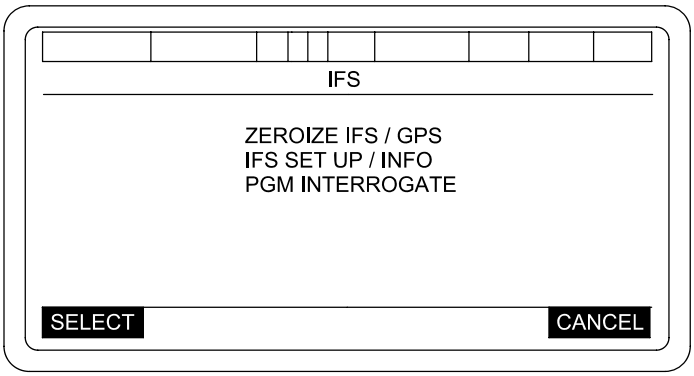


06pc071mf

**CAUTION**

Zeroizing keys will cause PGM INCAPABLE.

Selection of ZEROIZE IFS/GPS will result in the display of the confirmation message “ARE YOU SURE” “YES” “NO”. NO will result in no action. Selection of YES will send EPIAFS Zeroize Crypto Keys message to the PIK.

**NOTE**

- If Zeroize command is successful, Paladin will display “ZEROIZE IFS/GPS COMPLETE”.
- If Zeroize command is not successful, Paladin will display “ZEROIZE IFS/GPS FAILED” “ACK”.

O-9.13.2 IFS Setup/Information

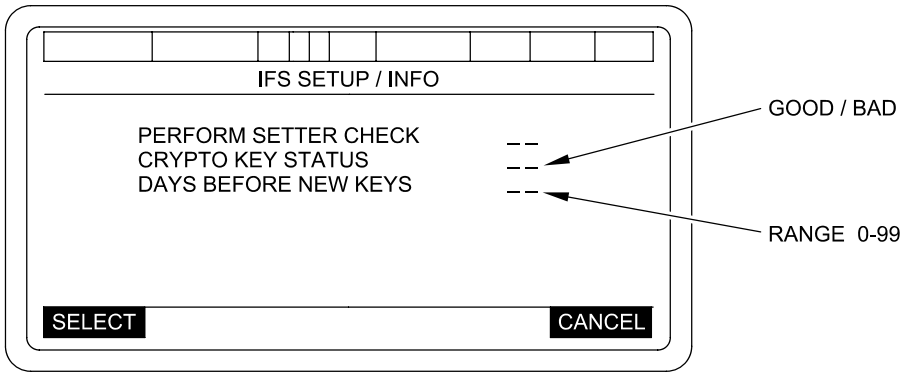


06pc071me

Select PERFORM SETTER CHECK and Paladin will display the operator prompt “PERFORM SETTER CHECK?” “YES” “NO”.

Selection of YES or NO will set PERFORM SETTER CHECK to that corresponding value. No further action will occur until a new power-up or restart of the Paladin software.

# O-9 PDFCS AND PDI FAULT DETECTION - CONTINUED

## O-9.13 Inductive Fuze Setter Display - Continued

### NOTE

- If NO was previously selected and this is a new software power-up or restart and the IFS Subsystem BIT is OUT, this will not cause the Fault BIT Lamp to illuminate.
- If YES was previously selected and this is a new software power-up or restart and IFS Subsystem BIT is OUT, this will cause Fault BIT Lamp to illuminate.

CANCEL will transition the display back to the IFS display.

O-9.13.3 PGM Interrogate.

Selection of of PGM INTERROGATE will send a command to the PIK to interrogate the XM982 and M982 projectile. If successful, Paladin will display the PGM INTERROGATE screen.

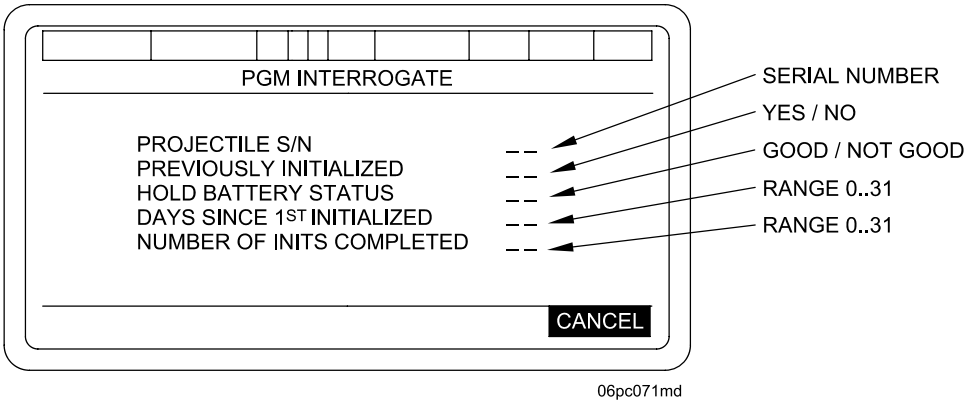


All data values for the PGM INTERROGATE screen are obtained from EPIAFS. If no data is available, -- will be displayed for that item.

CANCEL will transition the display back to the IFS display.

## O-10 SYMPTOM INDEX.

### NOTE

- Before you use this troubleshooting table, be sure you have performed all applicable operating checks in Chapter 2.
- For corrective actions of malfunctions not listed in this table, notify unit maintenance.
- Wherever the word lubricate appears, see Appendix I.

The following symptom index is to assist you in locating the correct troubleshooting procedure quickly.


| PDFCS | Troubleshooting Procedure Page |
|---|---|
| PDFCS-Software Lockup | O-248 |
| Cab does not traverse freely under PDFCS control | O-248 |
| Cab creeps under PDFCS control | O-249 |
| Gun tube does not move to LOAD position when LOAD is selected under PDFCS control | O-250 |
| Gun tube does not move to STOW position when STOW is selected under PDFCS control | O-251 |
| Gun tube does not move to LAY position when LAY is selected under PDFCS control | O-252 |
| PDU does not power up | O-253 |
| Training mode cannot be selected | O-253 |
| PDFCS is not able to receive a mission | O-253 |
| No audible alert for COS or crew (PDU power is ON) | O-254 |
| PDU messages are garbled/hard to read | O-254 |
| Keypad softkeys/arrow keys/keypad switches, LOAD, LAY, or STOW keys do not respond properly | O-254 |
| NAV subsystem fault (degraded mode) is indicated | O-254 |
| PDU subsystem fault (degraded mode) is indicated | O-255 |
| WPN subsystem fault (degraded mode) is indicated | O-255 |
| PDCU subsystem fault (degraded mode) is indicated | O-255 |
| PCU-2 subsystem fault (degraded mode) is indicated | O-255 |
| PMVS subsystem fault (degraded mode) is indicated | O-256 |
| PDFCS position drifts/PDCU “OP FAIL” is indicated or subsystem (degraded mode) is indicated | O-256 |
| IFS subsystem fault (degraded mode) is indicated | O-257 |

Table O-20. TROUBLESHOOTING

MALFUNCTION

TEST OR INSPECTION

CORRECTIVE ACTION

## PDFCS

**WARNING**

Before troubleshooting PDFCS gun positioning faults, make sure immediate area around and in the howitzer is clear of nonessential personnel and that no other equipment is within the 360 degree radius of the cab. Before moving gun servo switch to the ON position, announce loudly to everyone in immediate area, “PDFCS POWER ON”. Serious injury or death, and/or equipment damage could result.

1. PDFCS - SOFTWARE LOCKUP

Step 1. Place PDU POWER switch OFF and wait at least 5 seconds.

Step 2. Place PDU POWER switch ON and restart system. If lockup persists, notify unit maintenance.

2. CAB DOES NOT TRAVERSE FREELY UNDER PDFCS CONTROL.

**NOTE**

Verify following: main drive gears and gun tube are unobstructed and main hydraulic pressure is at 1925 psi ± 50 psi.

Step 1. Verify that GUN SERVO light illuminates when LAY button is pressed.

a. If not ON, place gun switch ON.

b. If switch is ON, go to step 2.

Step 2. Check to see if you are in NORMAL OPERATIONS mode.

a. Verify that TRAVERSE mode switch is in the POWER position. Check PDU for mode display. Status line will indicate mode.

If not, enter proper mode.

b. If in NORMAL OPERATIONS mode, check display fields.

(1) Verify that LOAD, LAY, or STOW fields are displayed on PDU when GUN SERVO SWITCH is on.

(2) LOAD, LAY, or STOW fields (graphics) are highlighted when displayed.

Gun is already in proper position.

(3) LOAD, LAY, or STOW fields (graphics) are displayed in normal form.

Reselect proper functional key. If cab does not traverse freely, notify unit maintenance. Complete mission in DEGRADED mode.

(4) LOAD, LAY, or STOW fields are not displayed.

If fields are not displayed, go to step 3.

Table O-20. TROUBLESHOOTING - Continued

| MALFUNCTION / TEST OR INSPECTION | CORRECTIVE ACTION |
|---|---|

## PDFCS - Continued

Step 3. Check PDU for fault indication.

a. GUN SERVO indicator not lit during LOAD/LAY/STOW operation.

Run PDI System Test (para O-9.3) and notify unit maintenance. Complete mission in DEGRADED mode.

b. FAULT indicator lit.

Check status line for faulty hardware, run PDI System Test (para O-9.3) and notify unit maintenance. Complete mission in DEGRADED mode.

3. CAB CREEPS UNDER PDFCS CONTROL.

Step 1. Verify that GUN SERVO ON/OFF switch is ON.

a. If not ON, place switch ON.

b. If switch is ON, go to step 2.

Step 2. Check to see if you are in NORMAL OPERATIONS mode.

a. Check PDU for mode display.

If not in proper mode, enter proper mode.

b. If in NORMAL OPERATIONS mode, check display fields.

(1) Verify that LOAD, LAY, or STOW fields are displayed on PDU.

(2) LOAD, LAY, or STOW fields are highlighted, when displayed.

Gun is already in proper position, cab should not creep. If cab still creeps, notify unit maintenance. Complete mission in DEGRADED mode.

(3) LOAD, LAY, or STOW fields are displayed properly.

Reselect proper functional key. If cab still creeps, notify unit maintenance.

(4) LOAD, LAY, or STOW fields are not displayed.

If fields are not displayed, go to step 3.

Step 3. Check PDU for fault indication.

a. GUN SERVO indicator not lit during LOAD/LAY/STOW operation.

Run PDI System Test (para O-9.3) and notify unit maintenance. Complete mission in DEGRADED mode.

b. FAULT indicator lit.

Check status line on PDU for faulty hardware, run PDI System Test (para O-9.3), and notify unit maintenance. Complete mission in DEGRADED mode.

Table O-20. TROUBLESHOOTING - Continued

| MALFUNCTION | TEST OR INSPECTION | CORRECTIVE ACTION |
|---|---|---|

## PDFCS - Continued

4. GUN TUBE DOES NOT MOVE TO LOAD POSITION WHEN LOAD IS SELECTED UNDER PDFCS CONTROL.

Step 1. Verify that GUN SERVO ON/OFF switch is ON.

a. If not ON, place switch ON.

b. If switch is ON, go to step 2.

Step 2. Check to see if you are in NORMAL OPERATIONS mode.

a. Verify that TRAVERSE mode switch is in the POWER position. Check PDU for mode display.

If not in proper mode, enter proper mode.

b. If in NORMAL OPERATIONS mode, check display fields.

(1) Verify that LOAD, LAY or STOW fields are displayed on PDU.

(2) LOAD, LAY, or STOW fields are highlighted, when displayed.

Gun is already in proper position.

(3) LOAD, LAY, or STOW fields are displayed properly.

Reselect proper functional key. If gun tube still does not move to LOAD position, notify unit maintenance. Complete mission in DEGRADED mode.

(4) LOAD, LAY, or STOW fields are not displayed.

If fields are not displayed, go to step 3.

Step 3. Check PDU for fault indication.

a. GUN SERVO indicator not lit during LOAD/LAY/STOW operation.

Run PDI System Test (para O-9.3) and notify unit maintenance. Complete mission in DEGRADED mode.

b. FAULT indicator lit.

Check status line on PDU for faulty hardware, run PDI System Test (para O-9.3), and notify unit maintenance. Complete mission in DEGRADED mode.

Table O-20. TROUBLESHOOTING - Continued

| MALFUNCTION | TEST OR INSPECTION | CORRECTIVE ACTION |
|---|---|---|

## PDFCS - Continued

5. GUN TUBE DOES NOT MOVE TO STOW POSITION WHEN STOW IS SELECTED UNDER PDFCS CONTROL.

Step 1. Verify that GUN SERVO ON/OFF switch is ON.

a. If not ON, place switch ON.

b. If switch is ON, go to step 2.

Step 2. Check to see if you are in NORMAL OPERATIONS mode.

a. Verify that TRAVERSE mode switch is in the POWER position. Check PDU for mode display.

If not in proper mode, enter proper mode.

b. If in NORMAL OPERATIONS mode, check display fields.

(1) Verify that LOAD, LAY, or STOW fields are displayed on PDU.

(2) LOAD, LAY, or STOW fields are highlighted when displayed.

Gun tube is already in proper position.

(3) LOAD, LAY, or STOW fields are displayed properly.

Reselect proper functional key. If gun tube does not traverse/elevate freely, notify unit maintenance. Complete mission in DEGRADED mode.

(4) LOAD, LAY, or STOW fields are not displayed.

If fields are not displayed, go to step 3.

Step 3. Check PDU for fault indication.

a. GUN TUBE SERVO indicator not lit during LOAD/LAY/STOW operation.

Run PDI System Test (para O-9.3) and notify unit maintenance. Complete mission in DEGRADED mode.

b. FAULT indicator lit.

Check status line on PDU for faulty hardware, run PDI System Test (para O-9.3), and notify unit maintenance. Complete mission in DEGRADED mode.

Table O-20. TROUBLESHOOTING - Continued

| MALFUNCTION | TEST OR INSPECTION | CORRECTIVE ACTION |
|---|---|---|

## PDFCS - Continued

6. GUN TUBE DOES NOT MOVE TO LAY POSITION WHEN LAY IS SELECTED UNDER PDFCS CONTROL.

Step 1. Verify that GUN SERVO ON/OFF switch is ON.

a. If not ON, place switch ON.

b. If switch is ON, verify TRAVERSE LOCK is in UNLOCKED position. Go to step 2.

Step 2. Check to see if you are in NORMAL OPERATIONS mode.

a. Verify that TRAVERSE mode switch is in the POWER position. Check PDU for mode display.

If not in proper mode, enter proper mode.

b. If in NORMAL OPERATIONS mode, check display fields.

(1) Verify that LOAD, LAY, or STOW fields are displayed on PDU.

(2) LOAD, LAY, or STOW fields are highlighted, when displayed.

Gun tube is already in proper position.

(3) LOAD, LAY, or STOW fields are displayed properly.

Reselect proper functional key. If gun tube still does not move to LAY position, notify unit maintenance. Complete mission in DEGRADED mode.

(4) LOAD, LAY, or STOW fields are not displayed.

If fields are not displayed, go to step 3.

Step 3. Check PDU for fault indication.

a. GUN TUBE SERVO indicator not lit during LOAD/LAY/STOW operation.

Run PDI System Test (para O-9.3) and notify unit maintenance. Complete mission in DEGRADED mode.

b. FAULT indicator lit.

Check status line on PDU for faulty hardware and notify unit maintenance. Complete mission in DEGRADED mode.

Table O-20. TROUBLESHOOTING - Continued

| MALFUNCTION | TEST OR INSPECTION | CORRECTIVE ACTION |
|---|---|---|

## PDFCS - Continued

7. PDU DOES NOT POWER UP.

Step 1. Verify that MASTER and HYDRAULIC POWER switches are ON.

a. If not ON, place switch(es) ON.

b. If switch(es) are ON, go to step 2.

Step 2. Verify that PCU-2 circuit breakers are ON.

a. If not ON, place appropriate circuit breaker(s) ON.

b. If all circuit breakers are ON, notify unit maintenance.

8. TRAINING MODE CANNOT BE SELECTED.

Step 1. Verify that you are in the proper mode for TRAINING selection.

a. If not, enter TRAINING mode.

b. If in TRAINING mode, place the TRAINING ON/OFF switch in ON position.

Step 2. TRAINING mode still cannot be entered.

Notify unit maintenance.

9. PDFCS IS NOT ABLE TO RECEIVE A MISSION.

Step 1. Verify that during POWER UP STATUS, PDFCS is okay.

a. PDFCS subsystems do not check out as OK. If not OK, notify unit maintenance. If degraded, go to step 2.

b. PDFCS subsystems check out OK. Go to step 2.

Step 2. Verify that you are in proper mode (NORMAL OPERATIONS).

a. If not in proper mode, enter NORMAL OPERATIONS mode and go through NETWORK display until you get to SETUP AND INFORMATION display. Now go to step 3.

b. If already in proper mode, go to step 3.

Step 3. Verify that data entry has been provided and is correct for all items marked with an * on SETUP AND INFORMATION display.

a. If data has not been entered, enter data now to initialize system. Now system is able to receive a mission.

b. If data has been entered for the * items and you still are unable to receive a mission, notify unit maintenance.

Table O-20. TROUBLESHOOTING - Continued

| MALFUNCTION | TEST OR INSPECTION | CORRECTIVE ACTION |
|---|---|---|

## PDFCS - Continued

10. NO AUDIBLE ALERT FOR COS OR CREW (PDU POWER IS ON).

    Step 1. Verify that wire/cable connections are tight.

    If wire/cable connections are tight, go to step 2.

    Step 2. Go to para O-9.5 and perform Audio Alert Test.

    a. If intercom is not adjusted properly, adjust it now.

    b. Rerun Audio Alert Test and go to step 3.

    Step 3. If there is still no audible signal, notify unit maintenance that intercom/PDFCS is faulty.

11. PDU MESSAGES ARE GARBLED/HARD TO READ.

    Step 1. Verify that wire/cable connections are tight.

    If wire/cable connections are tight, go to step 2.

    Step 2. Go to para O-9.6 and perform Display Test.

    a. If test indicates that some of the pixels on PDU are burned out, notify unit maintenance that PDU is faulty.

    b. If test does not indicate a problem with pixels, have unit maintenance check PDFCS.

12. KEYPAD SOFTKEYS/ARROW KEYS/KEYPAD SWITCHES, LOAD, LAY, OR STOW KEYS DO NOT RESPOND PROPERLY.

    Step 1. Verify PDFCS window is active by touching or left clicking on the window area or the PDFCS button on the task bar. If this doesn't correct the problem, proceed to step 2.

    Step 2. Verify that cable/harness connections are tight.

    If wire/cable connections are tight, go to step 3.

    Step 3. Go to para O-9.7 and perform Key and Switch Test.

    a. If test indicates a fault, notify unit maintenance that PDU is faulty.

    b. If no fault is indicated, notify unit maintenance to check PDFCS.

13. NAV SUBSYSTEM FAULT (DEGRADED MODE) IS INDICATED.

    Step 1. Verify that wire/cable connections are tight.

    If wire/cable connections are tight, go to step 2.

    Step 2. Traverse cab left and right 90 degrees from travel lock position and verify fault has been eliminated. If not, clean slip ring segment boards (para 3-8.17) and try the VMS test again before notifying unit maintenance.

    Step 3. Go to para O-9.2 and perform PDFCS Status.

    a. Determine which subsystem is degraded. If VMS fault is indicated, go to para O-9.4 and perform VMS Test. Notify unit maintenance of particular fault.

    b. Check PDCU reconfiguration advice (Appendix G.4). Determine if DEGRADED mode is acceptable. (Certain degraded subsystems will not interfere with PDFCS operation or mission capability, i.e., VMS is out.) If acceptable, continue mission.

Table O-20. TROUBLESHOOTING - Continued

| MALFUNCTION | TEST OR INSPECTION | CORRECTIVE ACTION |
|---|---|---|

## PDFCS - Continued

14. PDU SUBSYSTEM FAULT (DEGRADED MODE) IS INDICATED.

Step 1. Verify that wire/cable connections are tight.

If wire/cable connections are tight, go to step 2.

Step 2. Go to para O-9.2 and perform PDFCS Status.

a. Determine which subsystem is degraded. Notify unit maintenance of particular fault.

b. Determine if DEGRADED mode is acceptable. (Certain degraded subsystems will not interfere with PDFCS operation or mission capability; i.e., Embedded Trainer is out.) If acceptable, continue mission.

15. WPN SUBSYSTEM FAULT (DEGRADED MODE) IS INDICATED.

Step 1. Verify that wire/cable connections are tight.

If wire/cable connections are tight, go to step 2.

Step 2. Go to para O-9.2 and perform PDFCS Status.

a. Determine which subsystem is degraded. Notify unit maintenance of particular fault.

b. Check PDCU reconfiguration advice (Appendix G.4). Determine if DEGRADED mode is acceptable. (Certain degraded subsystems will not interfere with PDFCS operation or mission capability; i.e., Tube Temp is out.) If acceptable, continue mission.

16. PDCU SUBSYSTEM FAULT (DEGRADED MODE) IS INDICATED.

Step 1. Verify that wire/cable connections are tight.

If wire/cable connections are tight, go to step 2.

Step 2. Go to para O-9.2 and perform PDFCS Status.

a. Determine which subsystem is degraded. Notify unit maintenance of particular fault.

b. Determine if DEGRADED mode is acceptable. (Certain degraded subsystems will not interfere with PDFCS operation or mission; i.e., PDCU is out.) If acceptable, continue mission.

17. PCU-2 SUBSYSTEM FAULT (DEGRADED MODE) IS INDICATED.

Step 1. Verify that wire/cable connections are tight.

If wire/cable connections are tight, go to step 2.

Step 2. Go to para O-9.2 and perform PDFCS Status.

a. Determine which subsystem is degraded. Notify unit maintenance of particular fault.

b. Determine if DEGRADED mode is acceptable. (Certain degraded subsystems will not interfere with PDFCS operation or mission capability; i.e., PCU-2 BIT failed.) If acceptable, continue mission.

Table O-20. TROUBLESHOOTING - Continued

| MALFUNCTION<br>TEST OR INSPECTION | CORRECTIVE ACTION |
|---|---|

## PDFCS - Continued

18. PMVS SUBSYSTEM FAULT (DEGRADED MODE) IS INDICATED.

    Step 1. Verify that cable/harness connections are tight.

    If wire/cable connections are tight, go to step 2.

    Step 2. Go to para O-9.2 and perform PDFCS Status.

    a. Determine which subsystem is degraded. Notify unit maintenance of particular fault.

    b. Determine if DEGRADED mode is acceptable. (Certain degraded subsystems will not interfere with PDFCS operation or mission capability; i.e. PCU-2 BIT failed.) If acceptable, continue mission.

19. PDFCS POSITION DRIFTS/PDCU "OP FAIL" IS INDICATED OR SUBSYSTEM (DEGRADED MODE) IS INDICATED.

**NOTE**

- Infrequently, the PDFCS position has been observed to drift while the howitzer is stationary, or the "NAV OUT - DRU OP FAIL" alert message is displayed, for no apparent reason. These problems have been traced to errors in communications between the PDFCS and PDCU. With the GPS receiver (DAGR) installed and the PDFCS operated in a GPS aided mode, the problem will be bound to an acceptable level. If the DAGR is off or not receiving acceptable signals from four satellites, the drift may occur to an unacceptable level.
- Unless there is an operational constraint on using GPS, it is recommended that the DAGR be installed and the PDFCS be operated in the GPS aided mode.

Follow the steps below if position is drifting when the howitzer is stationary and any of the following symptoms are observed: Note that these conditions are normal when the howitzer is travelling.

a. "ZPT" is displayed in field 6 in the top line of the display. (Note that it takes about 30 seconds after the vehicle stops for a normal "ZPT" indication to clear.)

b. PDFCS position changes more than 10 meters.

c. The "ZUPT REQUIRED" alert message is displayed.

d. The "NAV POS UPDATE REQUESTED" alert message is displayed.

e. The "PRESS ACK WHEN TUBE STOWED" alert message is displayed when the howitzer hasn't traveled.

f. The "POS UPDATE INTERRUPTED" alert message is displayed after a NAV UPDATE is attempted.

g. The "POS UPDATE RJTD HOWITZER MOVG" alert message is displayed after a NAV UPDATE is attempted.

Table O-20. TROUBLESHOOTING - Continued

| MALFUNCTION | TEST OR INSPECTION | CORRECTIVE ACTION |
|---|---|---|

## PDFCS - Continued

### NOTE

The “POSITION UPDATE REQUIRED” alert message can be triggered by several conditions. Unless accompanied by one of the above indications, it is not a symptom of position drift.

If any of the position drift symptoms are observed or the “NAV OUT - DRU OP FAIL” alert message is displayed, perform the following procedure:

Step 1. Power down the PDFCS.

Step 2. Power the PDFCS back up.

Step 3. Reinitialize the PDFCS.

### NOTE

Do not replace the PDCU for position drift or PDCU OP FAIL problems. If cycling power, as discussed above, doesn’t relieve the symptoms, notify unit maintenance.

20. IFS SUBSYSTEM FAULT (DEGRADED MODE) IS INDICATED.

Step 1. Verify the wire/cable connections are tight.

If wire/cable connections are tight, go to step 2.

Step 2. Go to para O-9.2 and perform PDFCS status.

a. Determine which component is degraded. Notify unit maintenance of any replacement recommendations.

b. For GPS degradation, refer to TM 11-5825-291-13 for PLGR and TM 11-5820-1172-13 for DAGR.

# O-11 PDFCS CONFIDENCE TESTS.

## O-11.1 Verification of Position and Direction Using Survey Data.

**NOTE**

To perform the direction tests, it is important that the spheroid and grid zone stored in the PDFCS map mod are correct for the area of operation. If the PDFCS spheroid and grid zone are incorrect, get a correct map mod from FDC (select GET INITIALIZATION on the FDC DATA XFER menu) or enter the correct spheroid and grid zone by selecting ENTER SPHEROID/DATUM on the SETUP AND INFORMATION menu.

During field training or combat, the position and direction data shown by the PDFCS can be checked by using a surveyed location. The built-in-test (BIT) does not fully assure that the PDFCS accuracy is within tolerance.

To perform the position test, two carefully surveyed points about 3-4 km apart are required, with an accuracy of 1:1000 or better.

To perform the direction test, there are three options:

- Surveyed orienting station and end of orienting line (OS/EOL). The OS should be at least 100 meters from the howitzer survey point.
- A surveyed azimuth to a distant aiming point (DAP) that is at least 1500 meters away from the survey point. A closer point may be used, but the test will not be as accurate.
- When no survey azimuth is available, a deflection test using the PANTEL is possible.

Perform the tests as follows.

O-11.1.1 Verification of Position Using Survey Points.

a. Initialize the PDFCS with the howitzer left front sprocket within one meter of the first survey point. Ensure easting, northing, and altitude match the data posted on the survey marker.

**NOTE**

If a surveyed azimuth to a DAP will be used for a direction test at the second survey point, then the FDC move order should include the azimuth to DAP as the center of sector. If a manual move order is used, first enter the azimuth to DAP as the center of sector on the DEFINE SECTOR OF FIRE menu (select SECTOR OF FIRE from SETUP AND INFORMATION menu). Then by positioning howitzer at second survey point with vehicle heading aligned with center of sector, you will ensure the tube is pointed toward the DAP.

b. After the nav subsystem is fully aligned, receive a move order from FDC (destination INIT POINT) to the second survey point. If FDC is not available, enter a manual move order to the second survey point.

c. Move to the second survey point without stopping.

d. Upon arrival at the survey point, position howitzer with the left front sprocket within one meter of survey point. Wait 30 seconds before proceeding to next step.

# O-11 PDFCS CONFIDENCE TESTS - CONTINUED

## O-11.1 Verification of Position and Direction Using Survey Data - Continued

O-11.1.1 Verification of Position Using Survey Points - Continued

e. With the STEER TO screen displayed, read and record PDFCS position data under POSN (easting, northing, and altitude) and the range to destination (RNG) in the upper right corner of the screen. Subtract the POSN altitude from the DESTN altitude.

f. Compare the data obtained in step e with the following tolerances.

| | |
|---|---|
| RNG | 26 meters or less |
| Altitude Difference | ± 26 meters |

g. If the PDFCS data is within tolerance, but the POSN easting, northing, and altitude do not match the survey marker data exactly, then press ARRIVED key and do a NAV POSN UPDATE, using the NAV POSN UPDATE screen from the SETUP AND INFORMATION menu.

h. If PDFCS data is within tolerance, position test is complete. Skip the steps below and proceed to the chosen method for testing direction.

i. If the PDFCS data is out of tolerance, verify the DESTN easting, northing, and altitude matches the data on the survey marker. If they do not match, record the survey marker data for later use.

j. Press ARRIVED key. Select NAV POSN UPDATE from the SETUP AND INFORMATION menu to enter the survey marker data. Do a NAV POSN UPDATE by pressing the USE ALL key.

k. After the nav subsystem is fully aligned, receive a MOVE ORDER from FDC (or do a manual move order) to the first survey point.

l. Move to the first survey point without stopping.

m. Repeat steps d. through f. at the first survey point. Record the data and note whether the PDFCS is in or out of tolerance.

n. Press ARRIVED key. Select NAV update from the SETUP AND INFORMATION menu to enter the survey marker data. Do a NAV position update by pressing the USE ALL key.

o. After the nav subsystem is fully aligned, receive a move order from FDC (or do a manual move order) to the second survey point.

p. Move to the second survey point without stopping.

q. Repeat steps d. through f. at the second survey point. Record the data and note whether the PDFCS is in or out of tolerance.

r. If the PDFCS was out of tolerance two out of three trials, notify unit maintenance.

s. If the PDFCS was in tolerance two out of three trials, press ARRIVED key. Select NAV UPDATE from the SETUP AND INFORMATION menu and enter the second survey marker data. Do a NAV POSN UPDATE by pressing USE ALL key. Proceed to the chosen method for testing direction.

O-11.1.2 Verification of Direction Using an OS/EOL.

The PDFCS nav subsystem uses gyros to align the system to north. Checks of PDFCS direction may be accomplished using survey points and the M2 aiming circle, or a theodolite. Perform the test as follows.

a. Ensure the howitzer is fully initialized and emplaced at the survey point on level ground. Ensure that a NAV POSN UPDATE has been done using the survey marker data.

b. Unstow the tube. Install muzzle crosshairs.

# O-11 PDFCS CONFIDENCE TESTS - CONTINUED

## O-11.1 Verification of Position and Direction Using Survey Data - Continued

O-11.1.2 Verification of Direction Using an OS/EOL - Continued

c. Set up and level the aiming circle over the OS.

d. Place the azimuth of the Orienting Line (OL) on the aiming circle using the upper (recording) motion.

e. Sight the aiming circle on the EOL using the lower (non-recording) motion.

f. Sight the aiming circle toward the howitzer using the upper (recording) motion.

g. Using the primer vent hole and muzzle crosshairs, align the cannon bore on the aiming circle lens.

h. With the upper (recording) motion of the aiming circle, align the vertical crosshair on the center of the cannon bore. Aiming circle operator announces “NUMBER (SO AND SO) REFER, AIMING POINT THIS INSTRUMENT”.

i. Read the azimuth to the cannon bore. This corresponds to the back azimuth of the cannon bore.

j. If the aiming circle azimuth to the tube is greater than 3200, subtract 3200 to obtain tube pointing azimuth. If the aiming circle azimuth to the tube is less than 3200, add 3200 to obtain tube pointing azimuth.

k. Select DISPLAY FORMAT from the SETUP AND INFORMATION menu. Change display from DEFLECTION to AZIMUTH and press USE ALL key.

l. Select FIRE COMMANDS from the SETUP AND INFORMATION menu. When FIRE COMMANDS menu is displayed, press USE ALL to display a FIRE MISSION screen.

m. Read and record ACTL AZ and QUAD off the FIRE MISSION screen. PDFCS operator announces “NUMBER (SO AND SO), AZIMUTH (SO MUCH)”.

n. Aiming circle operator compares the readings from steps j and m. If the difference is with ± 2 mils, the aiming circle operator announces “SAFE”.

**NOTE**

Quadrant should also be checked with a pretested gunner’s quadrant. After adjusting for breech correction, reading should compare within ± 2 mils.

o. PDFCS operator compares the readings from steps k and n. If the difference is within ± 2 mils, the direction test is complete. Skip the steps below. Press EOM key on the FIRE MISSION menu to return to the SETUP AND INFORMATION menu. Select DISPLAY FORMAT and change display back to DEFLECTION and press USE ALL key.

p. If either the azimuth or quadrant difference exceeds ± 2 mils, stow tube. Select NAV UPDATE from SETUP AND INFORMATION menu. When NAV UPDATE menu is displayed, check data and correct if necessary. When data is correct, select FORCE NAV RESTART and press USE ALL key to align the nav subsystem.

q. Recheck the aiming circle level and position over the stake.

r. After the nav subsystem if fully aligned, unstow tube and repeat steps d through o.

s. If results are still out of tolerance, notify unit maintenance.

# O-11 PDFCS CONFIDENCE TESTS - CONTINUED

## O-11.1 Verification of Position and Direction Using Survey Data - Continued

O-11.1.3 Verification of Direction Using an Azimuth to a DAP.

The PDFCS nav subsystem uses gyros to align the system to north. Checks of PDFCS direction may be accomplished using a survey point and a surveyed azimuth to a DAP at least 1500 meters away. A closer point may be used, but the test will not be as accurate. Perform the test as follows.

a. Ensure the PDFCS is fully initialized and the nav subsystem is fully aligned. Ensure the howitzer is positioned with the left front sprocket within one meter of the survey point. Ensure the howitzer is pointed generally toward the DAP.

b. Unstow the tube.

c. Align the cannon bore on the DAP.

d. Select DISPLAY FORMAT from the SETUP AND INFORMATION menu. Change display from DEFLECTION to AZIMUTH and press USE ALL key.

e. Select FIRE COMMANDS from the SETUP AND INFORMATION menu. When FIRE COMMAND menu is displayed, press USE ALL to display a FIRE MISSION screen.

f. Read and record ACTL AZ and QUAD off the FIRE MISSION screen.

g. Compare the azimuth display on the PDFCS (ACTL AZ) with the surveyed azimuth to the DAP. Azimuth should compare within ± 2 mils.

h. Compare the quadrant displayed on the PDFCS (ACTL QUAD) with the quadrant elevation off the M145A1 Mount. Quadrant elevation should compare within ± 2 mils.

**NOTE**

Quadrant should also be checked with a pretested gunner's quadrant. After adjusting for breech correction, reading should compare within ± 2 mils.

i. If the results are within tolerance, the test is complete. Skip the steps below. Press EOM key on the FIRE MISSION menu to return to the SETUP AND INFORMATION menu. Select DISPLAY FORMAT and change display back to DEFLECTION and press USE ALL key.

j. If the results are out of tolerance, stow tube. Select NAV UPDATE from SETUP AND INFORMATION menu. When NAV UPDATE menu is displayed, check data and correct if necessary. When data is correct, select FORCE NAV RESTART and press USE ALL key to align the nav subsystem.

k. After the NAV subsystem is fully aligned, unstow tube and repeat steps c through i.

l. If results are still out of tolerance, notify unit maintenance.

# O-11 PDFCS CONFIDENCE TESTS - CONTINUED

## O-11.1 Verification of Position and Direction Using Survey Data - Continued

O-11.1.4 Verification of Deflection and Quadrant.

If surveyed azimuth data is not available, you can check the PDFCS and the PANTEL for a match in deflection and quadrant elevation. To perform this test, a DAP at least 1500 meters away is needed. Perform the test as follows.

**NOTE**

The howitzer may be positioned at a survey point if the position test is also being conducted. However, a survey point is not necessary to perform the deflection and quadrant test alone.

a. Receive a move order from FDC to fire point. If FDC is not available, enter a manual move order to a FIRE POINT.

b. With the EMPLACE FIRE POINT screen displayed, position howitzer with tube pointed generally toward center of sector (base azimuth).

c. Press ARRIVED and unstow tube. Install muzzle crosshairs.

d. Use default value for MAXIMUM TUBE ELEVATION and press USE ALL on the SITE DEFINITION screen. The SECTION IN ORDER AT FIRE POINT screen will be displayed.

e. Using the power control handle, traverse the tube until ACTL DEFL displays 3200 deflection on the SECTION IN ORDER screen (this is the center of sector or base azimuth).

**NOTE**

If there is no FPF or priority fire mission on the screen, you may press the LOAD key to traverse the tube to 3200 deflection. Ensure that ACTL DEFL remains on 3200 deflection when you release the LOAD key. Adjust with power control handle, if necessary.

f. Check boresight of PANTEL with M140/M140A1 alignment device.

g. Select a DAP that is at least 1500 meters away.

h. Using the Azimuth deflection knob, align the vertical hairline of the PANTEL on the DAP. Level the pitch and cross level bubbles and check alignment.

i. Rotate counter rest knob on PANTEL until 3200 appears on reset counter.

j. Using the primer vent hole and muzzle crosshairs, align the tube on the DAP.

k. Level pitch and cross level bubbles on PANTEL mount. Using the azimuth deflection knob, align vertical hairline of PANTEL on the DAP. Record PANTEL deflection reading.

l. Center elevation level vial on M145A1 mount. Record M145A1 quadrant reading.

m. Read and record the ACTL deflection (DEFL) and quadrant (QUAD) obtained on the PDFCS SECTION IN ORDER screen.

n. Compare deflections and quadrants obtained in steps k, l, and m. The tolerance between readings is $\pm$ 2 mils for both deflection and quadrant.

o. If PDFCS and PANTEL agree within the tolerance, the test is complete. Skip the next step.

p. If PDFCS and PANTEL do not agree with the tolerance, notify unit maintenance.

## O-11 PDFCS CONFIDENCE TESTS - CONTINUED

### O-11.2 Testing the Accuracy of the PDFCS Elevation.

**NOTE**

Before performing this test, ensure that the cannon assembly is properly equilibrated (para 3-8.2) to prevent tube elevation drift.

The PDFCS elevation accuracy should be tested whenever the trunnions have been leveled for optical fire control alignment test and measurements. It is suggested that a survey point be put in at the location of these tests for the purpose of proper initialization of the PDFCS.

This test is used to verify the PDFCS quadrant elevation and gunner's quadrant agree at all elevations. Perform the test as follows.

a. Initialize the PDFCS with the tube stowed in the travel lock.

b. When the Nav Subsystem is fully aligned, unstow tube, and recheck trunnion level using a plumbline.

c. Level the tube using a pretested gunner's quadrant on the machined surface just rear of the muzzle brake. Set the gunner's quadrant on the top (widest) surface with the feet aligned with the machined shoulder.

d. With the tube held at the level position, place the gunner's quadrant on the breech elevation seats. Measure and record breech correction.

e. Select FIRE COMMANDS from the SETUP AND INFORMATION menu. When FIRE COMMANDS menu is displayed, press USE ALL to display a FIRE MISSION screen.

f. Read and record ACTL QUAD on the FIRE MISSION screen. QUAD should be zero mils ± 0.5 mils.

g. If ACTL QUAD is not within tolerance, notify unit maintenance.

h. Set the scale of the gunner's quadrant to 100 mils plus the sum of the gunner's quadrant correction and the breech correction.

i. Place the gunner's quadrant on the breech seats. Elevate the tube (power or manual) until the bubble is centered.

j. Read and record the ACTL QUAD on the FIRE MISSION screen. If the difference between the ACTL QUAD and the tube elevation exceeds ± 0.5 mils, verify all settings. Record the difference.

k. Repeat steps h. through j., adding 100 mils elevation each time, until maximum elevation is reached. Then decrease elevation in 100 mil increments and repeat measurements.

l. Compare all differences to the tolerance of ± 0.5 mils. If the reading at any elevation exceeds the tolerance, notify unit maintenance.

# ALPHABETICAL INDEX

## NOTE

Maintenance information for M109A6 is included in this Index. For software versions 7 and 7P and 2 and 2P, see Table of Contents for applicable Index pages.

## A


Abbreviations, AFCS and PDIU, 3-35

Abbreviations, List of, 1-4

Abbreviations, PDFCS and PDI, 3-38.30

Accessing Warning Messages, G.1-1

Accessory Control Box, 2-12

Accessory Control Box Indicator LED Removal, 3-81

Additional Authorization List, C-1
- Additional Authorized Items List, C-2
- Explanation of Listing, C-1
- General, C-1
- Scope, C-1

AFCS and PDIU Abbreviations, 3-35

AFCS and PDIU Fault Detection, 3-3
- AFCS and PDIU Abbreviations, 3-35
- Audio Alert Test, 3-29
- BIT Status, 3-6
- Boresight Angle Entry, 3-32
- Display Test, 3-30
- Equivalent Full Charge (EFC), 3-32
- PDIU System Test, 3-9
- Power Up Built-In-Test (BIT), 3-3
- Software Version/Configuration Display, 3-38
- Vehicle Motion Sensor Test, 3-27
- Weapon Control Test, 3-24.1

AFCS Components, LED Removal, 3-132

AFCS Fire Mission, 2-223
- AFCS HIPSHOOT, 2-234
- Ammunition Accountability, 2-230
- Direct Fire Procedures Using AFCS, 2-236
- End of Mission, 2-233
- Firing Mission, 2-228
- Platoon Operation Center, 2-226
- System Menus, 2-242
  - AFCS Status, 2-246
  - Display Format, 2-248
  - Display Intensity, 2-249
  - Fire Commands, 2-243
  - GPS Control, 2-250.1
  - Last Move Orders, 2-246
  - Manual Move Order, 2-250
  - Messages, 2-244
  - Muzzle Velocity Variance (MVV), 2-257
  - Operational/Maintenance Transition, 2-258
  - Send Checkfire, 2-245
  - Stored Targets, 2-245
  - System Update, 2-247
  - Tube Temperature, 2-247

AFCS HIPSHOOT, 2-234

AFCS Initialization, 2-152.1
- Initialization After a Catastrophic Failure, 2-207
- Initializing, 2-157
- Initializing After an Orderly Shutdown, 2-189
- System Power-Up, 2-152.1

AFCS Operating Controls and Indicators, 2-138

AFCS Operating Modes, 2-138

AFCS Section in Order, 2-222

AFCS Status, 2-246

AFCS System Power-Up, 2-152.1

AFCS Travel Mode, 2-208.1
- Emplacement Fire Point/Fire Area, 2-213
- Movement, 2-208.1

AFCS, PDIU, and Cab Navigation System, 1-18.1, 1-38

AFCS/BCS Spheroid and Datum Table, J-1

AFCS/PDFCS Confidence Tests, 3-157
- Testing the Accuracy of the AFCS/PDFCS Elevation, 3-162
- Verification of Position and Direction Using Survey Data, 3-157

AFCS/PDFCS, Testing the Accuracy of the, 3-162

AFCS/PDFCS/BCS Spheroid and Datum Table Spheroid #1 - Australian National Spheroid, J-1

After Firing, 5-61

Air Cleaner, Maintenance of, 3-84
- Ammunition, 1-1, 5-1

## ALPHABETICAL INDEX - CONTINUED


Authorized Projectiles, 5-5
General, 5-1
Identification, 5-1
Injury/Damage, 1-1
Safety, Care, and Handling, 1-1

Ammunition Accountability
AFCS, 2-230
PDFCS, 2-258.113

Ammunition Components, Packing and Unpacking, 5-36

Ammunition or Components of Ammunition Prepared for Firing, but not Rammed, 5-67

Ammunition Prepared For Firing But Not Fired, 5-62

Armament and Cab Maintenance, 3-86
Adjustment of Elevation System, 3-90
AFCS Components, LED Removal, 3-132
Bore Evacuator Assembly, Removing/Installing, 3-99
Breech Mechanism Assembly, 3-115
Breech Mechanism Disassembly, 3-102
Estimating Remaining Round Life of Howitzer Tubes, 3-94
Filling Hydraulic Reservoir, 3-126
Hydraulic Control Box LED Removal, 3-129
M3 Heater Pilot Light Lamp Removal, 3-130
Microclimate Conditioning System (MCS) NBC Filter Replacement, 3-133
Muzzle Brake, Removing/Installing, 3-97
Rammer Operational Checks, 3-92
Servicing Replenisher, 3-96
Sighting and Fire Control Equipment Maintenance, 3-86
Slip Ring Segment Board Assembly Cleaning, 3-134
Vehicle Motion Sensor (VMS) Modem LED Removal (Hull/Cab), 3-131
Zeroing Pressure, 3-94

Assembly and Preparation For Use, 2-76

Audio Alert Test
AFCS, 3-29,
PDFCS, 3-38.25

Authorized Fuzes, 5-25
Fuze, Electronic Time (ET), M762 and M767, 5-29
Fuze, Mechanical Time Superquick, M564, 5-26.1
Fuze, Mechanical Time, M565, 5-27
Fuze, Point-Detonating: M557, M572 or M739 Series, 5-25
Fuze, Proximity, Variable Time, M728, 5-27
Fuze, Proximity, Variable Time, M732 Series, 5-28
Fuzes, Mechanical Time Superquick, M577 and M582, 5-28

Authorized Fuzes, Foreign (NATO), 6-12.1

Authorized Projectiles
Projectile, 155MM, DPICM, M864, 5-15
Projectile, 155MM, HE, M692, 5-17
Projectile, 155MM, HE, Rocket Assist M549/M549A1, 5-12
Projectile, 155MM, ICM, M449 Series, 5-13
Projectile, 155MM, ICM, M483A1, 5-14
Projectile, 155MM, Illuminating, M485A1 and M485A2, 5-11
Projectile, 155MM, Smoke, HC, M116A1, 5-11
Projectile, 155MM, Smoke, WP, M825/M825A1, 5-10
Projectile, 155MM, Agent, H or HD, M110, 5-6, 5-7
Projectile, 155MM, AT, Remote Anti-Armor Mine System, M718/M718A1, 5-18
Projectile, 155MM, AT, Remote Anti-Armor Mine System, M741, 5-18
Projectile, 155MM, Gas, VX (Persistent) Or GB (Non-Persistent) M121A1, 5-9
Projectile, 155MM, HE, M107, 5-6
Projectile, 155MM, HE, M731, 5-17
Projectile, 155MM, Heat, M712, 5-19
Projectile, 155MM, Practice, M804/M804A1, 5-20
Projectile, 155MM, Training, M823, 5-19
Projectile, Smoke, WP, M110, and M110E1, 5-8
Projectile/Fuze Combinations for Howitzer M109A6 with M284 Cannon, 5-21
Projectile/Propelling Charge Combinations for Howitzer M109A6 with M284 Cannon, 5-23
Projectiles, 5-5

Authorized Projectiles, Foreign (NATO), 6-2

Auxiliary Quadrant on M145A1 Mount Using the Gunner's Quadrant Testing, 3-152


## B


Backing the Howitzer, 2-103

Basic Issue Items List, B-6

Batteries, Servicing, 3-68

Bilge Pump, Operating the, 2-108

## ALPHABETICAL INDEX - CONTINUED


BIT Status
AFCS, 3-6
PDFCS, 3-38.2

Bore Evacuator Assembly, Removing/Installing, 3-99

Boresight Angle Entry
AFCS, 3-32
PDFCS, 3-38.28

Boresighting - Distant Aiming Point Method, 2-277

Boresighting the Weapon, 3-143

Boresighting-Preliminary Procedure, 2-269

Boresighting-Test Target Method, 2-270

Break Periods During Training or Firing, 1-43

Breech Mechanism, Assembly of, 3-115

Breech Mechanism, Disassembly of, 3-102

Bustle Uploading and Stowage, E-10


# C


Cab Components, 1-18

Cab Decals and Instruction Plates, 2-132

Cannon and Mount Components, 1-22

Cannon-Launched Guided M712 Projectile, Heat (Copperhead) and M823 Projectile (Training), 5-72

Cannon-Launched Guided M712 Projectile, Heat (Copperhead) and M823 Projectile Training, 5-75
Description, 5-72
Unpackaging and Inspection, 5-73

Capabilities and Features, 1-11

Care of Ammunition, 5-64

Characteristics, 1-11

Checking Boresight of M117A2 Using M140 Alignment Device, 2-273

Checking M140 Alignment Device While Boresighting on Test Target, 2-272

Cleaning, K.1-7

Cold Tube Misfire/Checkfire Procedures, 2-305

Cold Weather Starting (Below +40 Degrees F), 2-336

Commander's Cupola, Operating, 2-118

Communications Equipment, Purpose of, 2-317

Comparison Test of M140 Alignment Device, 2-276

Components of End Item (COEI) and Basic Issue Items (BII) Lists, B-1
Explanation of Columns, B-1
General, B-1
Scope, B-1

Components of the End Item List, B-2

Control Box Assembly (Travel Lock) LED Removal, 3-78

Coolant Heater, Operating, 2-335

Cooling System, 1-30

Corrosion Prevention and Control (CPC), 1-1, H-1
General, H-1
Scope, H-1
Tools and Materials, H-2
Treatment Procedures, H-2
Types of Corrosion Problems, H-1

COS Controls and Indicators, 2-7
Display Unit, 2-8
Hydraulic Control Box, 2-9
PDFCS Display Unit (PDU) and PDFCS Keypad, 2-8.1

COS Seat and Footrest, Operating, 2-115

Crew Compartment Warning Light Lamp Removal, 3-79

Crew Seats, Operating, 2-117


# D


DC Power Messages
AFCS, 2-151
PDFCS, 2-258.18

Decals and Instruction Plates, 2-131
Cab Decals and Instruction Plates, 2-132
Hull Decals and Instruction Plates, 2-131

Deflections, Testing and Reliability, 3-146

Description and Use of Operator's Controls and Indicators, 2-1

Destruction of Army Materiel to Prevent Enemy Use, 1-2

Diagnostic Mode Reconfiguration Advice Messages, G.1-6

Differences Between Models, 1-25

## ALPHABETICAL INDEX - CONTINUED

Digital Processor Section, K.1-6

Direct Fire Procedures, 2-293

Direct Fire Procedures Using PDFCS, 2-258.118

Display Format
- AFCS, 2-248
- PDFCS, 2-258.131

Display Intensity
- PDFCS, 2-249,
- AFCS2-258.132

Display Test
- AFCS, 3-30
- PDFCS, 3-38.26

Display Unit, 2-8

Dome Lights, 2-92

Doppler Antenna Section, K.1-5

Driver's Controls and Indicators, 2-1
- Driver's Controls and Equipment, 2-1
- Driver's Instrument Panels, 2-4
- Travel Lock Control Box, 2-6
- Winterization Heater Control Box, 2-6

Driver's Instrument Panels, 2-4

Driving, 2-98

Driving Operation in Extreme Cold Weather, 2-339

Driving Over Rough, Soft or Hilly Terrain, 2-100

Duds, 2-308

# E

Electrical System, 1-32

Elevating, Traversing and, 2-127

Elevation System, Adjustment, 3-90

Embedded Trainer
- Entering Training Mode, F-3
- General, F-1
- Initialize Training Option, F-19
- Level of Operation, F-4
- Levels of Training, F-1

Emergency Shutdown, 2-312.4

Emplacement Fire Pont/Fire Area
- AFCS, 2-213
- PDFCS, 2-258.95

Emplacing Infinity Aiming Reference Collimator M1A1, 2-265

Emplacing the Howitzer, 2-259

End of Mission
- AFCS, 2-233
- PDFCS, 2-258.115

Engine Air Cleaner System, Operating, 2-114

Engine Cooling System, 3-62.1

Equipment Characteristics, Capabilities, and Features, 1-11

Equipment Data, 1-25

Equipment Description, 1-11

Equipment Performance, K.1-4

Equivalent Full Charge (EFC)
- AFCS, 3-32
- PDFCS, 3-38.28

Estimating Remaining Round Life of Howitzer Tube, 3-94

Excess Explosive Components, 5-68

Expendable/Durable Supplies and Materials List, D-1
- Expendable/Durable Supplies and Materials List, D-2
- Explanation of Columns, D-1
- Scope, D-1

Exterior Components, 1-12

External Decontamination, 2-342

External Inspection, K.1-7

Extractor Assembly Operation, 5-79

# F

Field Manuals, A-1

Fire Commands
- AFCS, 2-243
- PDFCS, 2-258.124

Fire Control Alignment Tests and Measurements, 3-137
- Equipment Required for Fire Control Alignment Tests, 3-137
- Preparation for Fire Control Alignment Tests, 3-137

Fire Extinguishing System (FES), Operating, 2-324

## ALPHABETICAL INDEX - CONTINUED


Firing 155MM Cannon, 2-298

Firing Mission
- AFCS, 2-228,
- PDFCS, 2-258.111

Flash Reducer, M2 (T2), 5-34.1

Fording, 2-341

Foreign Ammunition (NATO), 6-1
- General, 6-1

Forms, A-1

Fuel System, 1-28

Fuel System, Servicing, 3-64

Fuze Assembly, 5-43

Fuze Preparation, 5-40
- Fuze Assembly, 5-43
- General, 5-40
- Lifting Plug Removal, 5-40
- Special Preparation for the M577 Series Fuze, 5-44
- Supplementary Charge, 5-41

Fuze Setting, 5-45
- Procedure Number 1, Fuzes, M557, M572, or M739 Series, 5-45
- Procedure Number 2, Fuzes, M728, M514, and M732 Proximity VT Fuzes, 5-46
- Procedure Number 3, Fuzes, M564 and M565, 5-48
- Procedure Number 4, Fuzes, M577 and M582 Series, 5-52
- Procedure Number 5, Fuzes M762 and M767, 5-54

Fuze, Artillery, Multi-Option (MOFA): M782, 5-30.1

Fuze, Electronic Time (ET), M762 and M767, 5-29

Fuze, Mechanical Time Superquick, M564, 5-26.1

Fuze, Mechanical Time, M565, 5-27

Fuze, Point-Detonating: M557, M572 or M739 Series, 5-25

Fuze, Proximity, Variable Time, M728, 5-27

Fuze, Proximity, Variable Time, M732 Series, 5-28

Fuzes, 6-12.1
- Authorized Fuzes, 6-12.1

Fuzes, Foreign (NATO), 6-12.1

Fuzes, Maintenance, 5-67

Fuzes, Mechanical Time Superquick, M577 Series and M582 Series, 5-28


## G


General Information, 1-1

Glossary, 1-8

Glow Plug System, 1-36

GPS Control
- AFCS, 2-250.1
- PDFCS, 2-258.134

Gun Tube, Releasing, 2-119

Gun Tube, Stowing, 2-123

Gunner's Controls and Equipment, 2-10

Gunner's Controls and Indicators, 2-10
- Accessory Control Box, 2-12
- Gunner's Controls and Equipment, 2-10
- MCS Control Panel, 2-11

Gunner's Quadrant End-for-End Test, 3-139

Gunner's Quadrant Micrometer Test, 3-138


## H


Handling, Ammunition, 5-64

Heater Operation Faults (Global A20), 2-312.3

Hot Tube Misfire/Checkfire Procedures, 2-308

How to use this manual, iii

Howitzer Cannon in Extreme Cold Weather, Operating, 2-340

Howitzer Decontamination, Complete, 2-343

Hull Components, 1-17

Hull Decals and Instruction Plates, 2-131

Hull Doors, Cab Doors, Grilles, and Baskets, Operating, 2-108

## ALPHABETICAL INDEX - CONTINUED

Hull Maintenance Procedures, 3-62.1
Accessory Control Box Indicator LED Removal, 3-81
Air Cleaner Maintenance, 3-84
Control Box Assembly (Travel Lock) LED Removal, 3-78
Crew Compartment Warning Light Lamp Removal, 3-79
Engine Cooling System, 3-62.1
M3 Heater Pilot Light Lamp Removal, 3-80
Maintenance of Track, 3-70
Master Warning Light Assembly Lamp Removal, 3-82
Portable/Driver's Instrument Panel Lamp and LED Removal, 3-77
Refueling, 3-67
Servicing Batteries, 3-68
Servicing Fuel System, 3-64
Winterization Heater Control Box Lamp Removal (If Equipped), 3-83

Hydraulic Control Box, 2-9

Hydraulic Control Box LED Removal, 3-129

Hydraulic Reservoir, Filling, 3-126

Hydraulic System Components, 1-24

Hydraulic System in Extreme Cold Weather, Operating, 2-339

## I

Initial Adjustment and Daily Checks, 2-76

Initialization After a Catastrophic Failure
AFCS, 2-207
PDFCS, 2-258.88

Initialization After an Orderly Shutdown
AFCS, 2-189
PDFCS, 2-258.70

Initializing
AFCS, 2-157
PDFCS, 2-258.25

Injury/Damage, 1-1

Instrument Panel, 2-5

Internal Decontamination, 2-343

Introduction, 1-1

## K

Key and Switch Test
AFCS, 3-31
PDFCS, 3-38.27

## L

Last Move Orders
AFCS, 2-246
PDFCS, 2-258.129

Laying for Deflection and Quadrant During Indirect Fire Missions - Laying for Elevation Using M1A1 Gunner's Quadrant, 2-292

Laying for Deflection and Quadrant During Indirect Fire Missions - Using Collimator M1A1, 2-289

Laying Howitzer Using M2 Aiming Circle, 2-262

Lead Filter and Ventilation System Operating, 2-313

Lead Particulate Filter and Ventilation System Components, 1-21

Leveling the Trunnions Using the Plumbline, 3-140

Leveling the Tube Using the Gunner's Quadrant, 3-143

Lifting Plug Removal, 5-40

Light Switch Assembly, 2-93

List of Abbreviations, 1-4

Loader Rammer Components, 1-23

Loading 155MM Cannon, 2-280

Loading 155MM Cannon-Hand Ramming, 2-288

Loading and Firing, 5-58

Location and Description of Major Components, 1-12
AFCS, PDIU, and Cab Navigation System, 1-18.1
Cab Components, 1-18
Cannon and Mount Components, 1-22
Exterior Components, 1-12
Hull Components, 1-17
Hydraulic System Components, 1-24
Lead Particulate Filter and Ventilation System Components, 1-21
Loader Rammer Components, 1-23
NBC System Components, 1-20
PDFCS, and Cab Navigation System, 1-18.2

Lubrication Instructions, 3-1, I-1
Annually, I-29

## ALPHABETICAL INDEX - CONTINUED


Daily, I-5
General, I-1
Monthly, I-19
Oil Can Points, I-31
Quarterly, I-22
Quarterly Lubrication Points, I-37
Scope, I-1
Semi-Annually, I-25
Weekly, I-16

Lubrication of Armament, 2-332


# M


M140 Alignment Device, 2-133

M145A1 Mount Using the Gunner's Quadrant on the Breech Quadrant Seats Testing, 3-155

M145A1 Mount, Scribing, 3-150

M27 Periscope, Removing/Installing, 4-2

M3 Heater Pilot Light Lamp Removal, 3-80, 3-130

M45 Periscope, Removing/Installing, 4-2

M577 Series Fuze, Special Preparation for the, 5-44

M712 Ammunition Prepared for Firing, but not Fired, 5-84

M712 Projectile Maintenance, 5-86

M93 Chronograph Muzzle Velocity Sensor (MVS), 2-315

M93 Chronograph Muzzle Velocity System (MCS) , Muzzle Velocity Measurement and Calculation, K-5

M93 Chronograph Muzzle Velocity System (MVS), K-1

M93 Chronograph Muzzle Velocity System (MVS)
ADSP-2100 Digital Signal Processor (DSP), K-6
Cleaning, K-8
Doppler Amplifier, K-5
Equipment Performance, K-4
External Inspection, K-8
M93 Chronograph (MVS) Abbreviations, K-9
Muzzle Velocity Processor (MVP), K-6
Packing and Shipping M93 Units and Parts, K-8
Physical Characteristics, K-5
Platoon Leadership Actions, K-1
POC Responsibilities, K-1
Power Requirements, K-5
RF Section, K-5
Scope,
M93 MVS, K-1
PMVS, K.1-1

M93 MVS (AFCS), 3-61

Machine Gun, Cal .50, 2-328

Maintenance Forms and Procedures, 1-1

Maintenance Forms and Records, 2-13

Maintenance Instructions, 3-1

Maintenance of Ammunition, 5-65
Ammunition or Components of Ammunition Prepared for Firing, but not Rammed, 5-67
Care, 5-64
Excess Explosive Components, 5-68
Fuzes, 5-67
General, 5-65
Handling, 5-64
Projectiles, 5-65
Propelling Charges M119A1, M119A2, M203, and M203A1, 5-67
Propelling Charges M3A1 and M4A2, 5-66
Unserviceable Ammunition, 5-68

Maintenance of Auxiliary Equipment, 4-1
General, 4-1

Maintenance Procedures, 3-62.1

Manual Move Order
AFCS, 2-250
PDFCS, 2-258.133

March Order - Preparation for Travel, 2-309

Master Warning Light Assembly Lamp Removal, 3-82

MCS Control Panel, 2-11

Measuring Site to Crest, 2-268

Messages
AFCS, 2-244
PDFCS, 2-258.125

Microclimate Conditioning System (MCS) NBC Filter Replacement, 3-133

Miscellaneous Publications, A-2

Misfire and Checkfire Procedures, 5-79

Misfire/CheckFiring Procedures
Cold Tube Misfire/Checkfire Procedures, 2-305

## ALPHABETICAL INDEX - CONTINUED


Hot Tube Misfire/Checkfire Procedures, 2-308
Warm Tube Misfire/Checkfire Procedures, 2-306

Misfire/Checkfiring Procedures, 2-303
Definitions, 2-303

Mounted Water Ration Heater (MWRH), Removing/Installing, 4-6

Movement, AFCS Travel Mode, 2-208.1

Movement, PDFCS Travel Mode, 2-258.90

Muzzle Brake, Removing/Installing, 3-97

Muzzle Velocity Measurement and Calculation, K.1-5

Muzzle Velocity Variance (MVV)
AFCS, 2-257
PDFCS, 2-258.142


# N


NBC Equipment, Operating, 2-326

NBC System Components, 1-20

Night Viewer AN/VVS-2(V)4, Removing/Installing, 4-3
Installing Night Viewer, 4-5
Removing Night Viewer, 4-3

Night Viewer, Installing, 4-5

Night Viewer, Removing, 4-3

Nomenclature Cross-Reference List, 1-3

Nuclear, Biological and Chemical (NBC) Decontamination Instructions, Internal Decontamination, 2-343

Nuclear, Biological, and Chemical (NBC) Decontamination Instructions, 2-342
Complete Howitzer Decontamination, 2-343
External Decontamination, 2-342
General, 2-342


# O


Operating Auxiliary Equipment, 2-311
Cal .50 Machine Gun, 2-328
Fire Extinguishing System (FES), 2-324
Lead Filter and Ventilation System, 2-313
M93 Chronograph Muzzle Velocity Sensor (MVS, 2-315
NBC Equipment, 2-326
Operation of Radio and Intercommunication Equipment, 2-316.9
Paladin Muzzle Velocity System (PMVS), 2-316.4
Personnel Heater, 2-311, 2-312.1
Portable Fire Extinguishers, 2-325
Precision Lightweight GPS (Global Positioning System) Receiver (PLGR), 2-329

Operating Howitzer Cannon in Extreme Cold Weather, 2-340

Operating Instructions, 2-1

Operating Paladin Muzzle Velocity System (PMVS), 2-316.4

Operating Procedures, 2-76
Backing the Howitzer, 2-103
Bilge Pump, 2-108
Commander's Cupola, 2-118
COS Seat and Footrest, 2-115
Crew Seats, 2-117
Dome Lights, 2-92
Driving, 2-98
Driving Over Rough, Soft or Hilly Terrain, 2-100
Engine Air Cleaner System, 2-114
Hull Doors, Cab Doors, Grilles, and Baskets, 2-108
Light Switch Assembly, 2-93
Portable Instrument Panel Checkout Procedures, 2-91
Pre-Starting Instructions, 2-77
Releasing Gun Tube, 2-119
Starting Disabled Vehicle, 2-87
Starting Engine, 2-82
Stopping the Vehicle, 2-101
Stowing Gun Tube, 2-123
Towing Operations, 2-103
Transmission Shift Selection, 2-94
Traversing and Elevating, 2-127

Operation, K.1-6

Operation in Extreme Cold, 2-334
Cold Weather Starting (Below 40 Degrees F), 2-336
Coolant Heater, 2-335
Driving Operations in Extreme Cold Weather, 2-339
Howitzer Cannon, 2-340
Hydraulic System, 2-339
Winterization Kit, 2-334

## ALPHABETICAL INDEX - CONTINUED


Operation in Extreme Heat, Humidity, or Salty Conditions, 2-333

Operation Mode Reconfiguration Advice Messages, G.1-3

Operation of Automatic Fire Control System (AFCS), 2-138
- AFCS Operating Controls and Indicators, 2-138
- AFCS Operating Modes, 2-138
- DC Power Messages (AFCS), 2-151

Operation of Extractor Assembly, 5-79
- Breakdown for Stowage, 5-83
- General, 5-79
- Setup For Use, 5-80
- Setup For Use Under Conditions of Poor Visibility, 5-82

Operation of Optical Fire Control Instruments, 2-133
- Alignment of Telescope M117A2, 2-137
- Installing Telescope M117A2, 2-134
- M140 Alignment Device, 2-133
- Operating Telescope M117A2 and Mount M145A1, 2-135

Operation of Paladin Digital Fire Control System (PDFCS)
- PDFCS Operating Controls and Indicators, 2-258.3
- PDFCS Operating Modes, 2-258.1
- DC Power Messages (PDFCS) , 2-258.18

Operation of Radio and Intercommunication Equipment, 2-316.9

Operation Under Unusual Conditions, 2-332
- General, 2-332
- Lubrication of Armament, 2-332
- Sighting and Fire Control Instruments, 2-333
- Vehicle, 2-332

Operation Under Usual Conditions, 2-76

Operational/Maintenance Transition
- AFCS, 2-258
- PDFCS, 2-258.143


# P


Packing and Shipping PMVS Units and Parts, K.1-6

Packing and Unpacking Ammunition Components, 5-36

Paladin Muzzle Velocity System (PMVS)
- Platoon Leadership Actions, K.1-1
- POC Responsibilities, K.1-1
  - Initial Calibration (No previous MVVs recorded, K.1-1
  - Previous MVVs Already Recorded and Desired Lot to Measure has no MVV, K.1-2
  - Previous MVVs Already Recorded and Desired Lot to Measure has Previous MVV, K.1-2
- Scope, K.1-1

Paladin Muzzle Velocity System (PMVS), 2-316.4, K.1-1

Paladin Muzzle Velocity System (PMVS)
- Cleaning, K.1-7
- Doppler Amplifier, K.1-6
- Equipment Performance, K.1-4
- External Inspection, K.1-7
- Muzzle Velocity Measurement and Calculation, K.1-5
- Muzzle Velocity Processor (MVP), K.1-6
- Packing and Shipping PMVS Units and Parts, K.1-6
- Physical Characteristics, K.1-5
- Power Requirements, K.1-5
- RF Section, K.1-5

PCU-2 Environment Display, 3-39

PDFCS and Cab Navigation System, 1-18.2, 1-38.2

PDFCS and PDCU Abbreviations, 3-38.30

PDFCS and PDI Fault Detection
- Audio Alert Test, 3-38.25
- BIT Status, 3-38.2
- Boresight Angle Entry, 3-38.28
- Display Test, 3-38.26
- Equivalent Full Charge (EFC), 3-38.28
- Key and Switch Test, 3-38.27
- PCU-2 Environment Display, 3-39
- PDFCS and PDCU Abbreviations, 3-38.30
- PDFCS Status, 3-38.5
- PDI System Test, 3-38.9
- Power Up Built-In-Test (BIT), 3-38.2
- Software Version/Configuration Display, 3-38.34
- Vehicle Motion Sensor Test, 3-38.23

PDFCS Display Unit (PDU) and PDFCS Keypad, 2-8.1

PDFCS Emergency Mission, 2-258.116

## ALPHABETICAL INDEX - CONTINUED

PDFCS Fire Mission, 2-258.106
Ammunition Accountability, 2-258.113
Direct Fire Procedures Using PDFCS, 2-258.118
End of Mission, 2-258.115
Firing Mission, 2-258.111
PDFCS HIPSHOOT, 2-258.116
Platoon Operation Center, 2-258.109
System Menus, 2-258.123
Display Format, 2-258.131
Display Intensity, 2-258.132
Fire Commands, 2-258.124
GPS Control, 2-258.134
Last Move Orders, 2-258.129
Manual Move Order, 2-258.133
Messages, 2-258.125
Muzzle Velocity Variance (MVV), 2-258.142
Operational/Maintenance Transition, 2-258.143
PDFCS Status, 2-258.129
Send Checkfire, 2-258.128
Stored Targets, 2-258.128
System Update, 2-258.130
Tube Temperature, 2-258.130

PDFCS HIPSHOOT, 2-258.116

PDFCS Initialization, 2-258.20
Initializing, 2-258.25
Initializing After an Orderly Shutdown, 2-258.70
Initialization After a Catastrophic Failure, 2-258.88
System Power-Up, 2-258.20

PDFCS Operating Modes, 2-258.1

PDFCS Section in Order, 2-258.105

PDFCS Status, 2-258.129, 3-38.5

PDFCS System Power-Up, 2-258.20

PDFCS Travel Mode, 2-258.90
Emplacement Fire Point/Fire Area, 2-258.95
Movement, 2-258.90

PDFCS, and Cab Navigation System, 1-18.2

PDI System Test, 3-38.9

PDI Warning Messages and Reconfiguration Advisor, G.1-1
Accessing Warning Messages, G.1-1
General, G.1-1
Scope, G.1-1
Warning/Advisor Messages, G.1-3

PDIU System Test, 3-9

PDIU Warning Messages and Reconfiguration Advisor, G-1
Accessing Warning Messages, G-1
General, G-1
Scope, G-1
Warning/Advisor Messages, G-3

Personnel Fan (Exhaust), 2-313

Personnel Heater, Operating, 2-311, 2-312.1

Physical Characteristics, K.1-5

Platoon Operation Center
AFCS, 2-226
PDFCS, 2-258.109

PMVS (PDFCS), 3-62

Portable Fire Extinguishers, Operating, 2-325

Portable Instrument Panel, 2-4

Portable Instrument Panel Checkout Procedures, 2-91

Portable/Driver's Instrument Panel Lamp and LED Removal, 3-77

Power Requirements, K.1-5

Power Up Built-In-Test (BIT)
AFCS, 3-3
PDFCS, 3-38.2

Powerpack, 1-27

Pre-Fire Checks, 2-278

Pre-Starting Instructions, 2-77

Precision Lightweight GPS (Global Positioning System) Receiver (PLGR), 2-329

Preliminary Commands and Formations, 1-40
To Change Posts, 1-42
To Dismount, 1-42
To Form the Section, 1-40
To Mount, 1-42
To Post the Section, 1-41
To Prepare for Action, 1-42

Preparation for Firing, 2-259, 5-35, 5-36.3
Boresighting - Distant Aiming Point Method, 2-277
Boresighting-Preliminary Procedure, 2-269
Boresighting-Test Target Method, 2-270
Checking Boresight of M117A2 Using M140 Alignment Device, 2-273

## ALPHABETICAL INDEX - CONTINUED


Checking M140 Alignment Device While Boresighting on Test Target, 2-272
Comparison Test of M140 Alignment Device, 2-276
Direct Fire Procedures, 2-293
Emplacing Infinity Aiming Reference Collimater M1A1, 2-265
Emplacing the Howitzer, 2-259
General, 5-35
Laying for Deflection and Quadrant During Indirect Fire Missions - Laying for Elevation Using M1A1 Gunner's Quadrant, 2-292
Laying for Deflection and Quadrant During Indirect Fire Missions - Using Collimator M1A1, 2-289
Laying Howitzer Using M2 Aiming Circle, 2-262
Loading 155MM Cannon, 2-280
Loading 155MM Cannon - Hand Ramming, 2-288
Measuring Site to Crest, 2-268
Packing and Unpacking Ammunition Components, 5-36
Pre-Fire Checks, 2-278
Primer, M82, 5-36.3
Field Artillery Projectile Pallet (FAPP), 5-36.1, 5-36.2
Flexible Rotating Band Cover (FRBC), 5-36.3
Procedures, 5-36.1
Projectile, 5-37
Propelling Charges, 5-36.3
Special Preparation of the M483A1 or M864 Projectile for Use in the Self-Registration Mode, 5-39, 5-40
Temperature Limits, 5-35

Preparation for Firing, M17 or M823 Projectiles, 5-77

Preparation for Travel (March Order), 2-309

Preventive Maintenance Checks and Services, 2-13
Classification of Fluid Leaks, 2-15
Criteria for 24-hour Continuous Operation, 2-15
Explanation of Table Entries, 2-13
General, 2-13
Guidelines to Keep in Mind While Performing PMCS, 2-14
Other Table Entries, 2-14
Warnings and Cautions, 2-13

Preventive Maintenance Checks and Services Table, 2-16, 2-21

Primer, M82, 5-34.1, 5-36.3

Principles of Operation, 1-27

Modular Artillery Charge System (MACS), 5-37

Projectile, 5-37

Projectile Coding and Markings, 5-3

Projectile, 155M, Illuminating, M485A1 and M485A2, 5-11

Projectile, 155MM, Agent, H or HD, M110, 5-7

Projectile, 155MM, AT, Remote Anti-Armor Mine System, M718/M718A1, 5-18

Projectile, 155MM, AT, Remote Anti-Armor Mine System, M741, 5-18

Projectile, 155MM, DPICM, M864, 5-15

Projectile, 155MM, Gas, VX (Persistent) or GB (Non-Persistent) M121A1, 5-9

Projectile, 155MM, HE, M107, 5-6

Projectile, 155MM, HE, M692, 5-17

Projectile, 155MM, HE, M731, 5-17

Projectile, 155MM, HE, M795, 5-6

Projectile, 155MM, HEAT, M712, 5-19

Projectile, 155MM, ICM, M449 Series, 5-13

Projectile, 155MM, ICM, M483A1, 5-14

Projectile, 155MM, Practice M804/M804A1, 5-20

Projectile, 155MM, Smoke, HC, M116A1, 5-11

Projectile, 155MM, Smoke, WP, M825/M825A1, 5-10

Projectile, 155MM, Training, M823, 5-19

Projectile/Fuze Combinations for Howitzer M109A6 with M284 Cannon, 5-21

Projectile/Propelling Charge Combinations for Howitzer M109A6 with M284 Cannon, 5-23

Projectiles Stowage, Vertical and Horizontal, E-14

Projectiles, 155MM HE, Rocket Assist M549/M549A1, 5-12

Projectiles, Authorized Projectiles, Foreign (NATO), 6-2

Projectiles, Authorized Projectiles, U.S., 5-5

Projectiles, Maintenance, 5-65

Projectiles, Smoke, WP, M110A1 (M110E2), and M110A2 (M110E3), 5-8

Projectiles, Uploading and Stowing, E-14

Propellant Charge Canisters, Uploading and Stowing, E-10

## ALPHABETICAL INDEX - CONTINUED

Propelling Charge Preparation, 5-57
Propelling Charge, M119A1, 5-57
Propelling Charge, M119A2, 5-57
Propelling Charge, M203 and M203A1, 5-57
Propelling Charges, M3A1 and M4A2, 5-57
Propelling Charge, M119A1, 5-32, 5-57
Propelling Charge, M119A2, 5-32, 5-57
Propelling Charge, M203, 5-33
Propelling Charge, M203 and M203A1, 5-57
Propelling Charge, M203A1, 5-33
Propelling Charge, M231, 5-34
Propelling Charge, M231 or M232/M232A1, 5-57
Propelling Charge, M232, 5-34
Propelling Charge, M3A1, 5-31
Propelling Charge, M232A1, 5-34.1
Propelling Charge, M4A2, 5-31
Propelling Charges, 6-19
Propelling Charges M119A1, M119A2, M203, and M203A1, Maintenance, 5-67
Propelling Charges M3A1 and M4A2, Maintenance, 5-66
Propelling Charges, Foreign (NATO), 6-19
Propelling Charges, M3A1 and M4A2, 5-57
Propelling Charges, U.S., 5-31

## R

Radio and Intercommunication Equipment, Operation of, Communications Equipment, Purpose of, 2-317
Rammer Operational Checks, 3-92
Reduced Crew Drill, 1-43
References, A-1
Field Manuals, A-1
Forms, A-1
Miscellaneous Publications, A-2
Scope, A-1
Technical Bulletins, A-1
Technical Manuals, A-1
Refueling, 3-67
Releasing Gun Tube, 2-119
Replenisher, Servicing, 3-96
Reporting Equipment Improvements Recommendations (EIRs), 1-2

## S

Safety, Care, and Handling, 1-1
Scope, 1-1
Scribe Verification Using the M145A1 PANTEL Mount Check, 3-151
Scribing the M145A1 Mount and Testing, 3-150
Section Drill, 1-40
Send Checkfire
AFCS, 2-245
PDFCS, 2-258.128
Service Intervals - Normal Conditions, 3-1
Service Intervals - Unusual Conditions, 3-1
Servicing Batteries, 3-68
Servicing Fuel System, 3-64
Sighting and Fire Control Equipment, Maintenance of, 3-86
Sighting and Fire Control Instruments, 2-333
Slip Ring Segment Board Assembly Cleaning, 3-134

## ALPHABETICAL INDEX - CONTINUED

Software Version/Configuration Display
AFCS, 3-38
PDFCS, 3-38.34

Special Corrections, Testing Reliability, 3-148

Special Preparation for the M577 Series Fuze, 5-44

Special Preparation of the M483A1 or M864 Projectile for Use in the Self-Registration Mode, 5-39, 5-40

Spheroid and Datum Tables, AFCS/BCS, J-1

Starting Disabled Vehicle, 2-87

Starting Engine, 2-82

Stencil and Label Locations (Cab and Hull Interior), E-3

Stencil Locations (Cab and Hull Exterior), E-2

Stopping the Vehicle, 2-101

Storage, Ammunition, 5-70
Loose Projectile Restraint System (LPRS), 5-71
General, 5-71
Instructions, 5-71
Use of LPRS, 5-71
Provisions, 5-70.1, 5-70.2
Sites, 5-70
Temperature Limits, 5-70

Stored Targets
AFCS, 2-245
PDFCS, 2-258.128

Stowage and Sign Guide for Components of End Item, Basic Issue Items, and Applicable Additional Authorization List Items, E-1
General, E-1
Scope, E-1

Stowage of Extractor Assembly in Howitzer, 5-86

Stowage of M712 Projectiles in M109A6 Howitzer, 5-86

Stowed Items - Location Index (Cab Exterior), E-6

Stowed Items - Location Index (Cab Interior), E-8

Stowed Items - Location Index (Hull), E-9

Stowing Gun Tube, 2-123

Supplementary Charge, 5-41

Suspension System, 1-34

Symptom Index, 3-40

System Menus
AFCS, 2-242
PDFCS, 2-258.123

System Power-Up, AFCS, 2-152.1

System Power-Up, PDFCS, 2-258.20

## T

Technical Bulletins, A-1

Technical Manuals, A-1

Telescope M117A2 and Mount M145A1, Operating, 2-135

Telescope M117A2, Alignment of, 2-137

Telescope M117A2, Installing, 2-134

Telescope Mount M145A1 (Azimuth Walk-off), Testing, 3-149

Temperature Check Procedures for MACS, M231 and M232/M232A1, Temperature Limits, 5-35

Testing Procedures for Fire Control Alignment, 3-138
Auxiliary Quadrant on M145A1 Mounting Using the Gunner's Quadrant Testing, 3-152
Boresighting the Weapon, 3-143
Deflections, Testing and Reliability, 3-146
Gunner's Quadrant End-For-End Test, 3-139
Gunner's Quadrant Micrometer Test, 3-138
Leveling the Trunnions Using the Plumbline, 3-140
Leveling the Tube Using the Gunner's Quadrant, 3-143
M145A1 Mount Using the Gunner's Quadrant on the Breech Quadrant Seats Testing, 3-155
Scribe Verification Using the M145 PANTEL Mount Check, 3-151
Scribing the M145 Mount and Testing, 3-150
Special Corrections, Testing Reliability, 3-148
Testing Telescope Mount M145 (Azimuth Walk-off), 3-149

Testing the Accuracy of the AFCS/PDFCS Elevation, 3-162

Towing Operations, 2-103

Track Maintenance, 3-70

Trainer, Embedded, F-1

Transmission Shift Selection, 2-94

## ALPHABETICAL INDEX - CONTINUED

Travel Lock Control Box, 2-6

Travel Lock System, 1-37

Traversing and Elevating, 2-127

Troubleshooting, 3-43
- AFCS, 3-43
- Batteries/Electrical System, 3-55
- Bilge Pump, 3-57
- Cab Traversing System, 3-57
- Cannon Elevating System, 3-61
- Cannon/Breech, 3-58
- Communication Wire, 3-52
- Driver's Night Viewer, 3-52
- Engine, 3-53
- Lead Particulate Filter and Ventilation System, 3-56
- Loader Rammer, 3-60
- M93 MVS, 3-61
- MCS, 3-51
- Mount & Recoil Mechanism, 3-60
- PDFCS, 3-50.3
- Personnel Heater, 3-56
- Precision Lightweight GPS (Global Positioning System) Receiver, 3-61
- Radios, 3-52
- Steering, 3-55
- Tracks and Suspension, 3-56
- Transmission, 3-55
- Travel Lock, 3-60

Troubleshooting Procedures, 3-1
- General, 3-1
- Scope, 3-1

Tube Temperature
- AFCS, 2-247
- PDFCS, 2-258.130

## U

Unloading 155MM Cannon, 2-301

Unloading an M712 Projectile, 5-83

Unpackaging, Inspection, M17 and M823 Projectiles, 5-73

Unserviceable Ammunition, 5-68

Uploading and Stowing Projectiles, E-14

Uploading and Stowing Propellant Charge Canisters, E-10

## V

Vehicle Motion Sensor (VMS) Modem LED Removal (Hull/Cab), 3-131

Vehicle Motion Sensor Test
- AFCS, 3-27
- PDFCS, 3-38.23

Ventilation System, 2-313

Verification of Position and Direction Using Survey Data, 3-157

## W

Warm Tube Misfire/Checkfire Procedures, 2-306

Warranty Information, 1-2

Weapon Control Test, 3-24.1

Winterization Heater Control Box, 2-6

Winterization Heater Control Box Lamp Removal (If Equipped), 3-83

Winterization Kit, Operating, 2-334

## Z

Zeroing Pressure, 3-94

# ALPHABETICAL INDEX
# (VERSION 7 AND 7P SOFTWARE)

## A


Abbreviations, AFCS and PDIU, L-188
Abbreviations, PDFCS and PDI, M-187
Accessing Warning Messages
  PDI Warning Messages and Reconfiguration Advisor (Version 7P Software), G.3-1
  PDIU Warning Messages and Reconfiguration Advisor (Version 7 Software), G.2-1
AFCS and PDIU Abbreviations, L-188
AFCS and PDIU Fault Detection, L-151
  AFCS and PDIU Abbreviations, L-188
  AFCS Status, L-154
  Audio Alert Test, L-180
  Boresight Angle Entry, L-183
  CPU Environment Display, L-192
  Display Test, L-181
  Equivalent Full Charge (EFC), L-183
  Key and Switch Test, L-182
  PDIU System Test, L-160
  Power Up Built-In-Test (BIT), L-151
  Software Version/Configuration Display, L-191
  Vehicle Motion Sensor Test, L-178
  Weapon Control Test, L-174
AFCS Confidence Tests, L-204
  Testing the Accuracy of the AFCS Elevation, L-209
  Verification of Position and Direction Using Survey Data, L-204
AFCS Emergency Mission, L-124
AFCS Fire Mission, L-114
  AFCS Emergency Mission, L-124
    Emplace, L-124
    End of Mission, L-125
    Lay, Load, Lay, and Fire, L-125
    Ready Gun, L-125
  Ammunition Accountability, L-121
  Direct Fire Procedures Using AFCS, L-126
  Firing Mission, L-119
    Subsequent Rounds, L-120
  End of Mission, L-123
  Platoon Operation Center, L-117
  System Menus, L-131
    AFCS Status, L-137
    Display Format, L-139
    Display Intensity, L-140
    Fire Commands, L-132
    GPS Control, L-143
    Last Move Orders, L-137
    Manual Move Order, L-141
    Maximum Tube Elevation, L-134
    Messages, L-133
    Muzzle Velocity, L-146
    Operational Maintenance Transition, L-150
    Record of Fire, L-143
    Send Checkfire, L-136
    Stored Targets, L-136
    System Restart, L-138
    Tube Temperature, L-138
AFCS Initialization, L-23
  Initialization After a Catastrophic Failure, L-94
  Initializing, L-28
  Initializing After an Orderly Shutdown, L-77
  System Power-Up, L-23
AFCS Operating Controls and Indicators, L-4
AFCS Operating Modes, L-3
  Maintenance Mode, L-4
  Normal Operation Mode, L-4
  Training Mode, L-3
AFCS Status, L-137, L-154
AFCS System Power-Up, L-23
AFCS Travel Mode, L-96
  Emplacement Fire Point/Fire Area, L-101
    Emplacing, L-104
    Establish Distant Aiming Point or Set Collimator (Optional), L-112
    Final Laying of Gun Tube at Firing Area, L-113
    Section In Order, L-110
    Site Data, L-106
  Movement, L-96
    Move Order, L-96
    Moving, L-99
    Moving with Navigation System Degraded, L-100
    Zero Velocity Updates, L-99
AFCS, Testing the Accuracy of the, L-209
AFCS/PDFCS/FDC Spheroid and Datum Table, J.1-1
AFCS/PDFCS/FDC Spheroid and Datum Table for Version 7 and 7P Software, J.1-1
Ammunition Accountability
  AFCS, L-121
  PDFCS, M-125

## ALPHABETICAL INDEX
## (VERSION 7 AND 7P SOFTWARE) - CONTINUED

Audio Alert Test
AFCS, L-180
PDFCS, M-179

Auxiliary Power Not Available
AFCS, L-22
PDFCS, M-23

# B

Boresight Angle Entry
AFCS, L-183
PDFCS, M-182

# C

CPU Environment Display
AFCS, L-192
PDFCS, M-192
PDFCS, M-180

# D

DC Power Messages
Auxiliary Power Not Available
AFCS, L-22
PDFCS, M-23
On Auxiliary Power
AFCS, L-21
PDFCS, M-22
Vehicle and Auxiliary Power OK
AFCS, L-22
PDFCS, M-23

DC Power Messages, AFCS, L-21
DC Power Messages, PDFCS, M-22

Diagnostic Mode Reconfiguration Advice Messages
Version 7 Software, G.2-6
Version 7P Software, G.3-6

Direct Fire Procedures Using AFCS, L-126
Direct Fire Procedures Using PDFCS, M-130

Display Format
AFCS, L-139
PDFCS, M-143

Display Intensity
AFCS, L-140
PDFCS, M-144

Display Test
AFCS, L-181
PDFCS, M-180

# E

Embedded Trainer (Version 7 and 7P Software)
Entering Training Mode, F.1-3
General, F.1-1
Initialize Training Option, F.1-18
Level of Operation, F.1-4
Levels of Training, F.1-1

Emergency Mission
AFCS, L-124
PDFCS, M-128

Emplace
AFCS, L-124
PDFCS, M-128

Emplacement Fire Point/Fire Area
AFCS, L-101
PDFCS, M-105

Emplacing
AFCS, L-104
PDFCS, M-108

End of Mission
AFCS, L-123, L-125
PDFCS, M-127, M-129

Equivalent Full Charge (EFC)
AFCS, L-183
PDFCS, M-182

Establish Distant Aiming Point or Set Collimator (Optional)
AFCS, L-112
PDFCS, M-116

# F

FBCB2 (SA) Mode, PDFCS, M-4
FC Mode, PDFCS, M-3

Final Laying of Gun Tube at Firing Area
AFCS, L-113
PDFCS, M-117

Fire Commands
AFCS, L-132
PDFCS, M-136

## ALPHABETICAL INDEX (VERSION 7 AND 7P SOFTWARE) - CONTINUED

Firing Mission
AFCS, L-119
PDFCS, M-123

## G

GPS Control
AFCS, L-143
PDFCS, M-146

## I

Initialization After a Catastrophic Failure
AFCS, L-94
PDFCS, M-98
Initialization After an Orderly Shutdown
AFCS, L-77
PDFCS, M-81
Initializing
AFCS, L-28
PDFCS, M-29

## K

Key and Switch Test
AFCS, L-182
PDFCS, M-181

## L

Last Move Orders
AFCS, L-137
PDFCS, M-141
Lay, Load, Lay, and Fire
AFCS, L-125
PDFCS, M-129

## M

Maintenance Mode
AFCS, L-4
PDFCS, M-4
Manual Move Order
AFCS, L-141
PDFCS, M-145
Maximum Tube Elevation
AFCS, L-134
PDFCS, M-138
Messages
AFCS, L-133
PDFCS, M-137
Move Order
AFCS, L-96
PDFCS, M-100
Movement, PDFCS Travel Mode, M-100
Movement, AFCS Travel Mode, L-96
Moving
AFCS, L-99
PDFCS, M-103
Moving with Navigation System Degraded
AFCS, L-100
PDFCS, M-104

## N

Normal Operation Mode
AFCS, L-4
PDFCS, M-4

## O

On Auxiliary Power
AFCS, L-21
PDFCS, M-22
Operation Mode Reconfiguration Advice Messages
Version 7 Software, G.2-4
Version 7P Software, G.3-4
Operation Mode Warning Messages
PDI, G.3-3
PDIU, G.2-3
Operation of Automatic Fire Control System (AFCS), DC Power Messages, L-21
Operation of Automatic Fire Control System (AFCS) (Version 7 Software), L-1
AFCS Operating Modes, L-3
General, L-3
Scope, L-3
Operation of Automatic Fire Control System (PDFCS), DC Power Messages, M-22
Operation of Paladin Digital Fire Control System (PDFCS) (Version 7P Software), M-1
General, M-3
PDFCS Operating Modes, M-3
Scope, M-3
Operational Maintenance Transition
AFCS, L-150
PDFCS, M-155

## ALPHABETICAL INDEX (VERSION 7 AND 7P SOFTWARE) - CONTINUED

# P


PDFCS and PDCU Abbreviations, M-187
PDFCS and PDI Fault Detection, M-156
Audio Alert Test, M-179
Boresight Angle Entry, M-182
CPU Environment Display, M-192
Display Test, M-180
Equivalent Full Charge (EFC), M-182
Key and Switch Test, M-181
PDFCS and PDCU Abbreviations, M-187
PDFCS Status, M-159
PDI System Test, M-163
Power Up Built-In-Test (BIT), M-156
Software Version/Configuration Display, M-191
Vehicle Motion Sensor Test, M-177
PDFCS Confidence Tests, M-204
Testing the Accuracy of the PDFCS Elevation, M-209
Verification of Position and Direction Using Survey Data, M-204
PDFCS Emergency Mission, M-128
PDFCS Fire Mission, M-118
Ammunition Accountability, M-125
Direct Fire Procedures Using PDFCS, M-130
Firing Mission, M-123
Subsequent Rounds, M-125
End of Mission, M-127
PDFCS Emergency Mission, M-128
Emplace, M-128
End of Mission, M-129
Lay, Load, Lay, and Fire, M-129
Ready Gun, M-129
Platoon Operation Center, M-121
System Menus, M-135
Display Format, M-143
Display Intensity, M-144
Fire Commands, M-136
GPS Control, M-146
Last Move Orders, M-141
Manual Move Order, M-145
Maximum Tube Elevation, M-138
Messages, M-137
Muzzle Velocity, M-151
Operational Maintenance Transition, M-155
PDFCS Status, M-141
Record of Fire, M-148
Send Checkfire, M-140
Stored Targets, M-140
System Restart, M-142
Tube Temperature, M-142
PDFCS Initialization, M-24
Initialization After a Catastrophic Failure, M-98
Initialization After an Orderly Shutdown, M-81
Initializing, M-29
System Power-Up, M-24
PDFCS Operating Controls and Indicators, M-5
PDFCS Operating Modes, M-3
FBCB2 (SA) Mode, M-4
FC Mode, M-3
Maintenance Mode, M-4
Normal Operation Mode, M-4
Training Mode, M-4
PDFCS Status, M-141, M-159
PDFCS System Power-Up, M-24
PDFCS Travel Mode, M-100
Emplacement Fire Point/Fire Area, M-105
Emplacing, M-108
Establish Distant Aiming Point or Set Collimator (Optional), M-116
Final Laying of Gun Tube at Firing Area, M-117
Section In Order, M-114
Site Data, M-110
Movement, M-100
Move Order, M-100
Moving, M-103
Moving with Navigation System Degraded, M-104
Zero Velocity Updates, M-103
PDFCS, Testing the Accuracy of the, M-209
PDI System Test, M-163
PDI Warning Messages and Reconfiguration Advisor (Version 7P Software), G.3-1
Accessing Warning Messages, G.3-1
General, G.3-1
Scope, G.3-1
Warning/Advisor Messages, G.3-3
PDIU System Test, L-160
PDIU Warning Messages and Reconfiguration Advisor (Version 7 Software), G.2-1
Accessing Warning Messages, G.2-1
General, G.2-1

# ALPHABETICAL INDEX (VERSION 7 AND 7P SOFTWARE) - CONTINUED


Scope, G.2-1
Warning/Advisor Messages, G.2-3

Platoon Operation Center
AFCS, L-117
PDFCS, M-121

Power Up Built-In-Test (BIT)
AFCS, L-151
PDFCS, M-156

## R

Ready Gun
AFCS, L-125
PDFCS, M-129

Record of Fire
AFCS, L-143, L-146
PDFCS, M-148, M-151

## S

Section In Order
AFCS, L-110
PDFCS, M-114

Send Checkfire
AFCS, L-136
PDFCS, M-140

Site Data
AFCS, L-106
PDFCS, M-110

Software Version/Configuration Display
AFCS, L-191
PDFCS, M-191

Spheroid and Datum Tables, AFCS/PDFCS/FDC, J.1-1

Stored Targets
AFCS, L-136
PDFCS, M-140

Subsequent Rounds
AFCS, L-120
PDFCS, M-125

Symptom Index
AFCS, L-193
PDFCS, M-193

System Menus
AFCS, L-131
PDFCS, M-135

System Power-Up
AFCS, L-23
PDFCS, M-24

System Restart
AFCS, L-138
PDFCS, M-142

## T

Testing the Accuracy of the AFCS Elevation, L-209

Testing the Accuracy of the PDFCS Elevation, M-209

Trainer, Embedded (Version 7 and 7P Software), F.1-1

Training Mode
AFCS, L-3
PDFCS, M-4

Troubleshooting
AFCS, L-194
PDFCS, M-194

Tube Temperature
AFCS, L-138
PDFCS, M-142

## V

Vehicle and Auxiliary Power OK
AFCS, L-22
PDFCS, M-23

Vehicle Motion Sensor Test
AFCS, L-178
PDFCS, M-177

Verification of Position and Direction Using Survey Data
AFCS, L-204
PDFCS, M-204

## W

Warning/Advisor Messages
AFCS, G.2-3
PDFCS, G.3-3

Weapon Control Test, L-174

## Z

Zero Velocity Updates
AFCS, L-99
PDFCS, M-103

# ALPHABETICAL INDEX
# (VERSION 2 AND 2P SOFTWARE)

## A


Abbreviations, AFCS and PDIU, N-238

Abbreviations, PDFCS and PDI, O-238

Accessing Warning Messages, PDI/PDIU Warning Messages and Reconfiguration Advisor (Version 2 and 2P Software), G.4-1

AFCS and PDIU Abbreviations, N-238

AFCS and PDIU Fault Detection, N-201
- AFCS and PDIU Abbreviations, N-238
- AFCS Status, N-204
- Audio Alert Test, N-230
- Boresight Angle Entry Test, N-233
- CPU Environment Display, N-244
- Display Test, N-231
- Equivalent Full Charge (EFC), N-233
- Inductive Fuze Setter Display, O-245
- Key and Switch Test, N-232
- PDIU System Test, N-210
- Power Up Built-In-Test (BIT), N-201
- Software Version/Configuration Display, N-242
- Vehicle Motion Sensor Test, N-228
- Weapon Control Test, N-224

AFCS Confidence Tests, N-256
- Testing the Accuracy of the AFCS Elevation, N-261
- Verification of Position and Direction Using Survey Data, N-256

AFCS Emergency Mission, N-156

AFCS Fire Mission, N-146
- AFCS Emergency Mission, N-156
  - Emplace, N-156
  - End of Mission, N-157
  - Lay, Load, Lay, and Fire, N-157
  - Ready Gun, N-157
- Ammunition Accountability, N-153
- Direct Fire Procedures Using AFCS, N-158
- Firing Mission, N-150
  - Subsequent Rounds, N-152
- End of Mission, N-155
- Platoon Operation Center, N-148
- System Menus, N-163
  - AFCS Status, N-175
  - Display Format, N-178
  - Display Intensity, N-179
  - Fire Commands, N-164
  - GPS Control, N-181
  - Last Move Orders, N-176
  - Manual Move Order, N-180
  - Maximum Tube Elevation, N-171
  - Messages, N-170
  - Muzzle Velocity, N-196
  - Operational Maintenance Transition, N-200
  - Record of Fire, N-182
  - Send Checkfire, N-173
  - Stored Targets, N-173
  - System Restart, N-177
  - Tube Temperature, N-177

AFCS Initialization, N-52
- Initialization After a Catastrophic Failure, N-128
- Initializing, N-58
- Initializing After an Orderly Shutdown, N-111
- System Power-Up, N-52

AFCS Operating Controls and Indicators, N-4

AFCS Operating Modes, N-3
- Maintenance Mode, N-4
- Normal Operation Mode, N-4
- Training Mode, N-3

AFCS Status, N-204

AFCS System Power-Up, N-52

AFCS Travel Mode, N-130
- Emplacement Fire Point/Fire Area, N-135
  - Emplacing, N-137
  - Establish Distant Aiming Point or Set Collimator (Optional), N-145
  - Final Laying of Gun Tube at Firing Area, N-145
  - Section In Order, N-143
  - Site Data, N-139
- Movement, N-130
  - Move Order, N-130
  - Moving, N-133
  - Moving with Navigation System Degraded, N-134
  - Zero Velocity Updates, N-133

AFCS, Testing the Accuracy of the, N-261

AFCS/PDFCS/FDC Spheroid and Datum Table, J.1-1

AFCS/PDFCS/FDC Spheroid and Datum Table for Version 7 and 7P and 2 and 2P Software, J.1-1

## ALPHABETICAL INDEX (VERSION 2 AND 2P SOFTWARE) - CONTINUED

Ammunition Accountability
AFCS, N-153
PDFCS, O-156

Audio Alert Test
AFCS, N-230
PDFCS, O-230

Auxiliary Power Not Available
AFCS, N-51
PDFCS, O-53

# B

Boresight Angle Entry, PDFCS, O-233

Boresight Angle Entry Test, AFCS, N-233

# C

CPU Environment Display
AFCS, N-244
PDFCS, O-244

# D

DC Power Messages
Auxiliary Power Not Available
AFCS, N-51
PDFCS, O-53
On Auxiliary Power
AFCS, N-50
PDFCS, O-52
Vehicle and Auxiliary Power OK
AFCS, N-51
PDFCS, O-53

DC Power Messages, AFCS, N-50

DC Power Messages, PDFCS, O-52

Diagnostic Mode Reconfiguration Advice Messages
Version 7 Software, G.4-1
Version 7P Software, G.4-1

Direct Fire Procedures Using AFCS, N-158

Direct Fire Procedures Using PDFCS, O-161

Display Format
AFCS, N-178
PDFCS, O-183

Display Intensity
AFCS, N-179
PDFCS, O-184

Display Test
AFCS, N-231
PDFCS, O-231

# E

Embedded Trainer (Version 2.0 and 2.0P Software), General, F.2-1

Embedded Trainer (Version 7 and 7P Software)
Entering Training Mode, F.2-3
Initialize Training Option, F.2-18
Level of Operation, F.2-4
Levels of Training, F.2-1

Emergency Mission
AFCS, N-156
PDFCS, O-159

Emplace
AFCS, N-156
PDFCS, O-159

Emplacement Fire Point/Fire Area
AFCS, N-135
PDFCS, O-139

Emplacing
AFCS, N-137
PDFCS, O-141

End of Mission
AFCS, N-155, N-157
PDFCS, O-158, O-160

Equivalent Full Charge (EFC)
AFCS, N-233
PDFCS, O-233

Establish Distant Aiming Point or Set Collimator (Optional), PDFCS, O-149

# F

FBCB2 (SA) Mode, PDFCS, O-4

## ALPHABETICAL INDEX
## (VERSION 2 AND 2P SOFTWARE) - CONTINUED

FC Mode, PDFCS, O-3

Final Laying of Gun Tube at Firing Area
AFCS, N-145
PDFCS, O-149

Fire Commands, AFCS, N-164, O-167

Firing Mission
AFCS, N-150
PDFCS, O-154

# G

GPS Control
AFCS, N-181
PDFCS, O-186

# I

Inductive Fuze Setter Display, AFCS, O-245

Initialization After a Catastrophic Failure
AFCS, N-128
PDFCS, O-132

Initialization After an Orderly Shutdown
AFCS, N-111
PDFCS, O-115

Initializing
AFCS, N-58
PDFCS, O-61

# K

Key and Switch Test
AFCS, N-232
PDFCS, O-232

# L

Last Move Orders
AFCS, N-176
PDFCS, O-181

Lay, Load, Lay, and Fire
AFCS, N-157
PDFCS, O-160

# M

Maintenance Mode
AFCS, N-4
PDFCS, O-4

Manual Move Order
AFCS, N-180
PDFCS, O-185

Maximum Tube Elevation
AFCS, N-171
PDFCS, O-174

Messages
AFCS, N-170
PDFCS, O-173

Move Order
AFCS, N-130
PDFCS, O-134

Movement, PDFCS Travel Mode, O-134

Movement, AFCS Travel Mode, N-130

Moving
AFCS, N-133
PDFCS, O-137

Moving with Navigation System Degraded
AFCS, N-134
PDFCS, O-138

# N

Normal Operation Mode
AFCS, N-4
PDFCS, O-4

# O

On Auxiliary Power
AFCS, N-50
PDFCS, O-52

Operation of Automatic Fire Control System (AFCS), DC Power Messages, N-50

Operation of Automatic Fire Control System (AFCS) (Version 2 Software), N-1
AFCS Operating Modes, N-3

## ALPHABETICAL INDEX (VERSION 2 AND 2P SOFTWARE) - CONTINUED


General, N-3
Scope, N-3

Operation of Automatic Fire Control System (PDFCS), DC Power Messages, O-52

Operation of Paladin Digital Fire Control System (PDFCS) (Version 2P Software), O-1

Operation of Paladin Digital Fire Control System (PDFCS) (Version 2P Software)
General, O-3
PDFCS Operating Modes, O-3
Scope, O-3

Operational Maintenance Transition
AFCS, N-200
PDFCS, O-205


# P


PDFCS and PDCU Abbreviations, O-238

PDFCS and PDI Fault Detection, O-206
Audio Alert Test, O-230
Boresight Angle Entry, O-233
CPU Environment Display, O-244
Display Test, O-231
Equivalent Full Charge (EFC), O-233
Key and Switch Test, O-232
PDFCS and PDCU Abbreviations, O-238
PDFCS Status, O-209
PDI System Test, O-214
Power Up Built-In-Test (BIT), O-206
Software Version/Configuration Display, O-242
Vehicle Motion Sensor Test, O-228

PDFCS Confidence Tests, O-258
Testing the Accuracy of the PDFCS Elevation, O-263
Verification of Position and Direction Using Survey Data, O-258

PDFCS Emergency Mission, O-159

PDFCS Fire Mission, O-150
Ammunition Accountability, O-156
Direct Fire Procedures Using PDFCS, O-161
Firing Mission, O-154
Subsequent Rounds, O-156
End of Mission, O-158

PDFCS Emergency Mission, O-159
Emplace, O-159
End of Mission, O-160
Lay, Load, Lay, and Fire, O-160
Ready Gun, O-160
Platoon Operation Center, O-152
System Menus, O-166
Display Format, O-183
Display Intensity, O-184
GPS Control, O-186
Last Move Orders, O-181
Manual Move Order, O-185
Maximum Tube Elevation, O-174
Messages, O-173
Muzzle Velocity, O-201
Operational Maintenance Transition, O-205
PDFCS Status, O-178
Record of Fire, O-187
Send Checkfire, O-176
Stored Targets, O-176
System Restart, O-182
Tube Temperature, O-181

PDFCS Initialization, O-54
Initialization After a Catastrophic Failure, O-132
Initialization After an Orderly Shutdown, O-115
Initializing, O-61
System Power-Up, O-54

PDFCS Operating Controls and Indicators, O-5

PDFCS Operating Modes, O-3
FBCB2 (SA) Mode, O-4
FC Mode, O-3
Maintenance Mode, O-4
Normal Operation Mode, O-4
Training Mode, O-4

PDFCS Status, O-178, O-209

PDFCS System Power-Up, O-54

PDFCS Travel Mode, O-134
Emplacement Fire Point/Fire Area, O-139
Emplacing, O-141
Establish Distant Aiming Point or Set Collimator (Optional), O-149
Final Laying of Gun Tube at Firing Area, O-149
Section In Order, O-147
Site Data, O-143

## ALPHABETICAL INDEX
## (VERSION 2 AND 2P SOFTWARE) - CONTINUED


Movement, O-134
Move Order, O-134
Moving, O-137
Moving with Navigation System Degraded, O-138
Zero Velocity Updates, O-137

PDFCS, Testing the Accuracy of the, O-263

PDI System Test, O-214

PDI Warning Messages and Reconfiguration Advisor (Version 2 and 2P Software), G.4-1
Accessing Warning Messages, G.4-1
General, G.4-1
Scope, G.4-1
Warning/Advisor Messages, G.4-3

PDIU System Test, N-210

PDIU Warning Messages and Reconfiguration Advisor (Version 2 and 2P Software), G.4-1
Accessing Warning Messages, G.4-1
General, G.4-1
Scope, G.4-1
Warning/Advisor Messages, G.4-3

Platoon Operation Center
AFCS, N-148
PDFCS, O-152

Power Up Built-In-Test (BIT)
AFCS, N-201
PDFCS, O-206


# R


Ready Gun
AFCS, N-157
PDFCS, O-160

Record of Fire
AFCS, N-182, N-196
PDFCS, O-187, O-201

Record of Fire Data Display, PDFCS, N-190, O-195

Record of Fire Display, PDFCS, N-184, O-189

Record of Fire Select Target Display, PDFCS, N-183, O-188


# S


Section In Order
AFCS, N-143
PDFCS, O-147

Send Checkfire
AFCS, N-173
PDFCS, O-176

Site Data
AFCS, N-139
PDFCS, O-143

Software Version/Configuration Display
AFCS, N-242
PDFCS, O-242

Spheroid and Datum Tables, AFCS/PDFCS/FDC, J.1-1

Stored Targets
AFCS, N-173
PDFCS, O-176

Subsequent Rounds
AFCS, N-152
PDFCS, O-156

Symptom Index
AFCS, N-245
PDFCS, O-247

System Menus
AFCS, N-163
PDFCS, O-166

System Power-Up
AFCS, N-52
PDFCS, O-54

System Restart
AFCS, N-177
PDFCS, O-182


# T


Testing the Accuracy of the AFCS Elevation, N-261

Testing the Accuracy of the PDFCS Elevation, O-263

Trainer, Embedded (Version 2 and 2P Software), F.2-1

Training Mode
AFCS, N-3

## ALPHABETICAL INDEX
## (VERSION 2 AND 2P SOFTWARE) - CONTINUED

PDFCS, O-4

Troubleshooting
AFCS, N-246
PDFCS, O-248

Tube Temperature
AFCS, N-177
PDFCS, O-181

# V

Vehicle and Auxiliary Power OK
AFCS, N-51
PDFCS, O-53

Vehicle Motion Sensor Test
AFCS, N-228
PDFCS, O-228

Verification of Position and Direction Using Survey Data
AFCS, N-256
PDFCS, O-258

# W

Warning/Advisor Messages
AFCS, G.4-3
PDFCS, G.4-3

Weapon Control Test, N-224

# Z

Zero Velocity Updates
AFCS, N-133
PDFCS, O-137

| **RECOMMENDED CHANGES TO PUBLICATIONS AND BLANK FORMS**<br>For use of this form, see AR 25–30; the proponent agency is ODISC4. | Use Part II (*reverse)* for Repair Parts and Special Tools Lists (RPSTL) and Supply Catalogs/Supply Manuals (SC/SM). | Date |
|---|---|---|
| TO: (*Forward to proponent of publication or form) (Include ZIP Code)* | FROM: *(Activity and location) (include ZIP code)* | |

**PART I – ALL PUBLICATIONS (EXCEPT RPSTL AND SC/SM) AND BLANK FORMS**

| PUBLICATION/FORM NUMBER | DATE | TITLE |
|---|---|---|
| TM 9–2350–314–10 | February, 1999 | Operator's Manual, Howitzer, Medium, Self–Propelled: 155MM, M109A6 |

| ITEM | PAGE | PARA | LINE | FIGURE NO. | TABLE | RECOMMENDED CHANGES AND REASON |
|---|---|---|---|---|---|---|
| | 1–2 | 1–5 | | | | Para 1–5 "DESTRUCTION OF ARMY MATERIAL TO PREVENT ENEMY USE" should be "1–5 DESTRUCTION OF ARMY MATERIEL TO PREVENT ENEMY USE" |

*Reference to line numbers within the paragraph or subparagraph.

| TYPED NAME, GRADE OR TITLE | TELEPHONE EXCHANGE/AUTOVON, PLUS EXTENSION | SIGNATURE |
|---|---|---|
| | | |

SAMPLE

DA FORM 2028 , FEB 74 REPLACES DA FORM 2028, 1 DEC 68, WHICH WILL BE USED. USAPPC V1.00

| TO: *(Forward direct to addressee listed in publication)* | FROM: *(Activity and location) (Include Zip Code)* | DATE |
|---|---|---|

PART II – REPAIR PARTS AND SPECIAL TOOL LISTS AND SUPPLY CATALOGS/SUPPLY MANUALS

| PUBLICATION NUMBER | DATE | TITLE |
|---|---|---|

| PAGE NO. | COLM NO. | LINE NO. | NATIONAL STOCK NUMBER | REFERENCE NO. | FIGURE NO. | ITEM NO. | TOTAL NO. OF MAJOR ITEMS SUPPORTED | RECOMMENDED ACTION |
|---|---|---|---|---|---|---|---|---|
| | | | | | | | | |

PART III – REMARKS *(Any general remarks or recommendations, or suggestions for improvement of publications and blank forms. Additional blank sheets may be used if more space is needed.)*

| TYPED NAME, GRADE OR TITLE | TELEPHONE EXCHANGE/AUTOVON, PLUS EXTENSION | SIGNATURE |
|---|---|---|

SAMPLE

USAPPC V1.00
USAPPC V1.00

| RECOMMENDED CHANGES TO PUBLICATIONS AND BLANK FORMS<br>For use of this form, see AR 25–30; the proponent agency is ODISC4. | Use Part II (*reverse)* for Repair Parts and Special Tools Lists (RPSTL) and Supply Catalogs/Supply Manuals (SC/SM). | Date |
|---|---|---|
| **TO:** (*Forward to proponent of publication or form) (Include ZIP Code)* | **FROM:** *(Activity and location) (include ZIP code)* | |

**PART I – ALL PUBLICATIONS (EXCEPT RPSTL AND SC/SM) AND BLANK FORMS**

| PUBLICATION/FORM NUMBER | DATE | TITLE |
|---|---|---|
| TM 9–2350–314–10 | February, 1999 | Operator's Manual, Howitzer, Medium, Self–Propelled: 155MM, M109A6 |

| ITEM | PAGE | PARA | LINE | FIGURE NO. | TABLE | RECOMMENDED CHANGES AND REASON |
|---|---|---|---|---|---|---|
| | | | | | | |

**Reference to line numbers within the paragraph or subparagraph.*

| TYPED, GRADE OR TITLE | TELEPHONE EXCHANGE/AUTOVON, PLUS EXTENSION | SIGNATURE |
|---|---|---|
| | | |

| TO: *(Forward direct to addressee listed in publication)* | FROM: *(Activity and location) (Include Zip Code)* | DATE |
|---|---|---|

PART II – REPAIR PARTS AND SPECIAL TOOL LISTS AND SUPPLY CATALOGS/SUPPLY MANUALS

| PUBLICATION NUMBER | DATE | TITLE |
|---|---|---|

| PAGE NO. | COLM NO. | LINE NO. | NATIONAL STOCK NUMBER | REFERENCE NO. | FIGURE NO. | ITEM NO. | TOTAL NO. OF MAJOR ITEMS SUPPORTED | RECOMMENDED ACTION |
|---|---|---|---|---|---|---|---|---|
| | | | | | | | | |

PART III – REMARKS *(Any general remarks or recommendations, or suggestions for improvement of publications and blank forms. Additional blank sheets may be used if more space is needed.)*

| TYPED NAME, GRADE OR TITLE | TELEPHONE EXCHANGE/AUTOVON, PLUS EXTENSION | SIGNATURE |
|---|---|---|

| RECOMMENDED CHANGES TO PUBLICATIONS AND BLANK FORMS<br>For use of this form, see AR 25–30; the proponent agency is ODISC4. | Use Part II (*reverse)* for Repair Parts and Special Tools Lists (RPSTL) and Supply Catalogs/Supply Manuals (SC/SM). | Date |
|---|---|---|
| **TO:** (*Forward to proponent of publication or form) (Include ZIP Code)* | **FROM:** *(Activity and location) (include ZIP code)* | |

**PART I – ALL PUBLICATIONS (EXCEPT RPSTL AND SC/SM) AND BLANK FORMS**

| PUBLICATION/FORM NUMBER | DATE | TITLE |
|---|---|---|
| TM 9–2350–314–10 | February, 1999 | Operator's Manual, Howitzer, Medium, Self–Propelled: 155MM, M109A6 |

| ITEM | PAGE | PARA | LINE | FIGURE NO. | TABLE | RECOMMENDED CHANGES AND REASON |
|---|---|---|---|---|---|---|
| | | | | | | |

**Reference to line numbers within the paragraph or subparagraph.*

| TYPED, GRADE OR TITLE | TELEPHONE EXCHANGE/AUTOVON, PLUS EXTENSION | SIGNATURE |
|---|---|---|
| | | |

| TO: *(Forward direct to addressee listed in publication)* | FROM: *(Activity and location) (Include Zip Code)* | DATE |
|---|---|---|

PART II – REPAIR PARTS AND SPECIAL TOOL LISTS AND SUPPLY CATALOGS/SUPPLY MANUALS

| PUBLICATION NUMBER | DATE | TITLE |
|---|---|---|

| PAGE NO. | COLM NO. | LINE NO. | NATIONAL STOCK NUMBER | REFERENCE NO. | FIGURE NO. | ITEM NO. | TOTAL NO. OF MAJOR ITEMS SUPPORTED | RECOMMENDED ACTION |
|---|---|---|---|---|---|---|---|---|
| | | | | | | | | |

PART III – REMARKS *(Any general remarks or recommendations, or suggestions for improvement of publications and blank forms. Additional blank sheets may be used if more space is needed.)*

| TYPED NAME, GRADE OR TITLE | TELEPHONE EXCHANGE/AUTOVON, PLUS EXTENSION | SIGNATURE |
|---|---|---|

| RECOMMENDED CHANGES TO PUBLICATIONS AND BLANK FORMS<br>For use of this form, see AR 25–30; the proponent agency is ODISC4. | Use Part II (*reverse)* for Repair Parts and Special Tools Lists (RPSTL) and Supply Catalogs/Supply Manuals (SC/SM). | Date |
|---|---|---|
| **TO:** (*Forward to proponent of publication or form) (Include ZIP Code)* | **FROM:** *(Activity and location) (include ZIP code)* | |

**PART I – ALL PUBLICATIONS (EXCEPT RPSTL AND SC/SM) AND BLANK FORMS**

| PUBLICATION/FORM NUMBER | DATE | TITLE |
|---|---|---|
| TM 9–2350–314–10 | February, 1999 | Operator's Manual, Howitzer, Medium, Self–Propelled: 155MM, M109A6 |

| ITEM | PAGE | PARA | LINE | FIGURE NO. | TABLE | RECOMMENDED CHANGES AND REASON |
|---|---|---|---|---|---|---|
| | | | | | | |

**Reference to line numbers within the paragraph or subparagraph.*

| TYPED, GRADE OR TITLE | TELEPHONE EXCHANGE/AUTOVON, PLUS EXTENSION | SIGNATURE |
|---|---|---|
| | | |

| TO: *(Forward direct to addressee listed in publication)* | FROM: *(Activity and location) (Include Zip Code)* | DATE |
|---|---|---|

PART II – REPAIR PARTS AND SPECIAL TOOL LISTS AND SUPPLY CATALOGS/SUPPLY MANUALS

| PUBLICATION NUMBER | DATE | TITLE |
|---|---|---|

| PAGE NO. | COLM NO. | LINE NO. | NATIONAL STOCK NUMBER | REFERENCE NO. | FIGURE NO. | ITEM NO. | TOTAL NO. OF MAJOR ITEMS SUPPORTED | RECOMMENDED ACTION |
|---|---|---|---|---|---|---|---|---|
| | | | | | | | | |

PART III – REMARKS *(Any general remarks or recommendations, or suggestions for improvement of publications and blank forms. Additional blank sheets may be used if more space is needed.)*

| TYPED NAME, GRADE OR TITLE | TELEPHONE EXCHANGE/AUTOVON, PLUS EXTENSION | SIGNATURE |
|---|---|---|

**By Order of the Secretary of the Army:**

DENNIS J. REIMER
*General, United States Army*
*Chief of Staff*

JOEL B. HUDSON
*Acting Administrative Assistant to the*
*Secretary of the Army*
05380

**DISTRIBUTION:** To be distributed in accordance with DA Form 12-37-E, block 1931 requirements for TM 9-2350-314-10.

# CONVERSION TABLE

| inch | decimal | mm |
|---|---|---|
| 1/64 | 0.015625 | 0.3969 |
| 1/32 | 0.031250 | 0.7938 |
| 3/64 | 0.046875 | 1.1906 |
| 1/16 | 0.062500 | 1.5875 |
| | | |
| 5/64 | 0.078125 | 1.9844 |
| 3/32 | 0.093750 | 2.3812 |
| 7/64 | 0.109375 | 2.7781 |
| 1/8 | 0.125000 | 3.1750 |
| | | |
| 9/64 | 0.140625 | 3.5719 |
| 5/32 | 0.156250 | 3.9688 |
| 11/64 | 0.171875 | 4.3656 |
| 3/16 | 0.187500 | 4.7625 |
| | | |
| 13/64 | 0.203125 | 5.1594 |
| 7/32 | 0.218750 | 5.5562 |
| 15/64 | 0.234375 | 5.9531 |
| 1/4 | 0.250000 | 6.3500 |
| | | |
| 17/64 | 0.265625 | 6.7469 |
| 9/32 | 0.281250 | 7.1438 |
| 19/64 | 0.296875 | 7.5406 |
| 5/16 | 0.312500 | 7.9375 |
| | | |
| 21/64 | 0.328125 | 8.3344 |
| 11/32 | 0.343750 | 8.7312 |

| inch | decimal | mm |
|---|---|---|
| 23/64 | 0.359375 | 9.1281 |
| 3/8 | 0.375000 | 9.5250 |
| | | |
| 25/64 | 0.390625 | 9.9219 |
| 13/32 | 0.406250 | 10.3188 |
| 27/64 | 0.421875 | 10.7156 |
| 7/16 | 0.437500 | 11.1125 |
| | | |
| 29/64 | 0.453125 | 11.5094 |
| 15/32 | 0.468750 | 11.9062 |
| 31/64 | 0.484375 | 12.3031 |
| 1/2 | 0.500000 | 12.7000 |
| | | |
| 33/64 | 0.515625 | 13.0969 |
| 17/32 | 0.531250 | 13.4938 |
| 35/64 | 0.546875 | 13.8906 |
| 9/16 | 0.562500 | 14.2875 |
| | | |
| 37/64 | 0.578125 | 14.6844 |
| 19/32 | 0.593750 | 15.0812 |
| 39/64 | 0.609375 | 15.4781 |
| 5/8 | 0.625000 | 15.8750 |
| | | |
| 41/64 | 0.640625 | 16.2719 |
| 21/32 | 0.656250 | 16.6688 |
| 43/64 | 0.671875 | 17.0656 |
| 11/16 | 0.687500 | 17.4625 |

| inch | decimal | mm |
|---|---|---|
| | | |
| 45/64 | 0.703125 | 17.8594 |
| 23/32 | 0.718750 | 18.2562 |
| 47/64 | 0.734375 | 18.6531 |
| 3/4 | 0.750000 | 19.050 |
| | | |
| 49/64 | 0.765625 | 19.4469 |
| 25/32 | 0.781250 | 19.8437 |
| 51/64 | 0.796875 | 20.2406 |
| 13/16 | 0.812500 | 20.6375 |
| | | |
| 53/64 | 0.828125 | 21.0344 |
| 27/32 | 0.843750 | 21.4312 |
| 55/64 | 0.859375 | 21.8281 |
| 7/8 | 0.875000 | 22.2250 |
| | | |
| 57/64 | 0.890625 | 22.6219 |
| 29/32 | 0.906250 | 23.0188 |
| 59/64 | 0.921875 | 23.4156 |
| 15/16 | 0.937500 | 23.8125 |
| | | |
| 61/64 | 0.953125 | 24.2094 |
| 31/32 | 0.96750 | 24.6062 |
| 63/64 | 0.984375 | 25.0031 |
| | | |
| 1 | 1.000000 | 25.4000 |

# THE METRIC SYSTEM AND EQUIVALENTS

**LINEAR MEASURE**

1 Centimeter = 10 Millimeters = 0.01 Meters = 0.3937 Inches
1 Meter = 100 Centimeters = 1000 Millimeters = 39.37 Inches
1 Kilometer = 1000 Meters = 0.621 Miles

**WEIGHTS**

1 Gram = 0.001 Kilograms = 1000 Milligrams = 0.035 Ounces
1 Kilogram = 1000 Grams = 2.2 Lb.
1 Metric Ton = 1000 Kilograms = 1 Megagram = 1.1 Short Tons

**LIQUID MEASURE**

1 Milliliter = 0.001 Liters = 0.0338 Fluid Ounces
1 Liter = 1000 Milliliters = 33.82 Fluid Ounces

**SQUARE MEASURE**

1 Sq. Centimeter = 100 Sq. Millimeters = 0.155 Sq. Inches
1 Sq. Meter = 10,000 Sq. Centimeters = 10.76 Sq. Feet
1 Sq. Kilometer = 1,000 Sq. Meters = 0.386 Sq. Miles

**CUBIC MEASURE**

1 Cu. Centimeter = 1000 Cu. Millimeters = 0.06 Cu. Inches
1 Cu. Meter = 1,000,000 Cu. Centimeters = 35.31 Cu.Feet

**TEMPERATURE**

°C = 5/9 (°F – 32)
212° Fahrenheit is equivilent to 100° Celsius
90° Fahrenheit is equivilent to 32.2° Celsius
32° Fahrenheit is equivilent to 0° Celsius
(9/5 x °C) + 32 = °F

## APPROXIMATE CONVERSION FACTORS

| TO CHANGE | TO | MULTIPLY BY |
|---|---|---|
| Inches | Centimeters | 2.540 |
| Feet | Meters | 0.305 |
| Yards | Meters | 0.914 |
| Miles | Kilometers | 1.609 |
| Square Inches | Square Centimeters | 6.451 |
| Square Feet | Square Meters | 0.093 |
| Square Yards | Square Meters | 0.836 |
| Square Miles | Square Kilometers | 2.590 |
| Acres | Square Hectometers | 0.405 |
| Cubic Feet | Cubic Meters | 0.028 |
| Cubic Yards | Cubic Meters | 0.765 |
| Fluid Ounces | Milliliters | 29.573 |
| Pints | Liters | 0.473 |
| Quarts | Liters | 0.946 |
| Gallons | Liters | 3.785 |
| Ounces | Grams | 28.349 |
| Pounds | Kilograms | 0.454 |
| Short Tons | Metric Tons | 0.907 |
| Pound–Feet | Newton–Meters | 1.356 |
| Pounds per Square Inch | Kilopascals | 6.895 |
| Miles per Gallon | Kilometers per Liter | 0.425 |
| Miles per Hour | Kilometers per Hour | 1.609 |

| TO CHANGE | TO | MULTIPLY BY |
|---|---|---|
| Centimeters | Inches | 0.394 |
| Meters | Feet | 3.280 |
| Meters | Yards | 1.094 |
| Kilometers | Miles | 0.621 |
| Square Centimeters | Square Inches | 0.155 |
| Square Meters | Square Feet | 10.764 |
| Square Meters | Square Yards | 1.196 |
| Square Kilometers | Square Miles | 0.386 |
| Square Hectometers | Acres | 2.471 |
| Cubic Meters | Cubic Feet | 35.315 |
| Cubic Meters | Cubic Yards | 1.308 |
| Milliliters | Fluid Ounces | 0.034 |
| Liters | Pints | 2.113 |
| Liters | Quarts | 1.057 |
| Liters | Gallons | 0.264 |
| Grams | Ounces | 0.035 |
| Kilograms | Pounds | 2.205 |
| Metric Tons | Short Tons | 1.102 |
| Newton–Meters | Pound–Feet | 0.738 |
| Kilopascals | Pounds per Square Inch | 0.145 |
| Kilometers per Liter | Miles per Gallon | 2.354 |
| Kilometers per Hour | Miles per Hour | 0.621 |

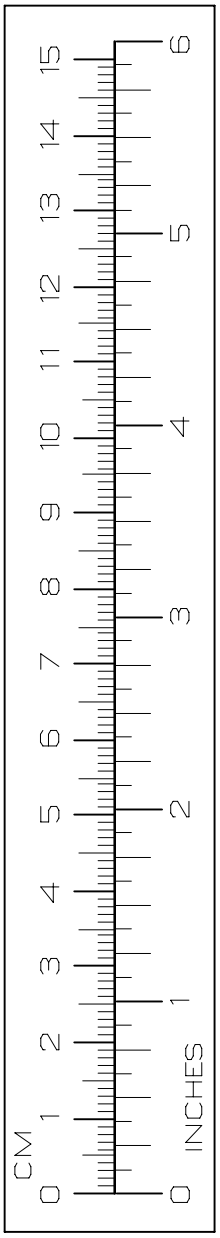

**PIN 071788-000**